US005757595A

United States Patent [19]

Ozawa et al.

[11] Patent Number: 5,757,595

[45] Date of Patent: May 26, 1998

[54] **APPARATUS FOR DISPLAYING BATTERY CHARGING OF ELECTRIC VEHICLE**

[75] Inventors: **Akira Ozawa**; **Toshiyuki Watanabe**; **Iwao Shimane**; **Naoki Osawa**; **Shinobu Ochiai**, all of Wako, Japan

[73] Assignee: **Honda Giken Kogyo Kabushiki Kaisha**, Tokyo, Japan

[21] Appl. No.: **826,826**

[22] Filed: **Apr. 8, 1997**

[30] **Foreign Application Priority Data**

Apr. 10, 1996 [JP] Japan 8-088633

[51] **Int. Cl.**[6] **G08B 21/00**

[52] **U.S. Cl.** **340/636**; 340/455; 340/693; 320/48; 429/91

[58] **Field of Search** 340/636, 455, 340/693; 320/48; 429/90–93

[56] **References Cited**

U.S. PATENT DOCUMENTS

5,202,617	4/1993	Nor	320/2
5,283,513	2/1994	Fujita et al.	320/56
5,521,443	5/1996	Imura et al.	340/455
5,596,261	1/1997	Suyama	340/636
5,656,919	8/1997	Proctor et al.	340/636

FOREIGN PATENT DOCUMENTS

4-334907	11/1992	Japan .
7-087607A	3/1995	Japan .

Primary Examiner—Thomas J. Mullen, Jr.
Assistant Examiner—Daniel J. Wu
Attorney, Agent, or Firm—Armstrong, Westerman, Hattori, McLeland & Naughton

[57] **ABSTRACT**

An apparatus for displaying the charging of the battery of an electric vehicle has a charging connector mounted on an outer panel of a vehicle body of the electric vehicle, a lid openably mounted on the panel in covering relation to the charging connector and a cavity defined in the outer panel, and a display panel disposed in the cavity for displaying a period of time required until the battery is fully charged and/or a charged capacity of the battery. The driver of the electric vehicle can easily recognize the remaining time required until the battery is fully charged and a percentage of the fully charged capacity of the battery to which the battery is presently charged, from outside of the electric vehicle. The driver is not required to confirm the state of charge of the battery with an indicator on a battery charger or within the passenger's compartment of the electric vehicle, but can easily confirm the state of charge of the battery from outside of the electric vehicle.

6 Claims, 5 Drawing Sheets

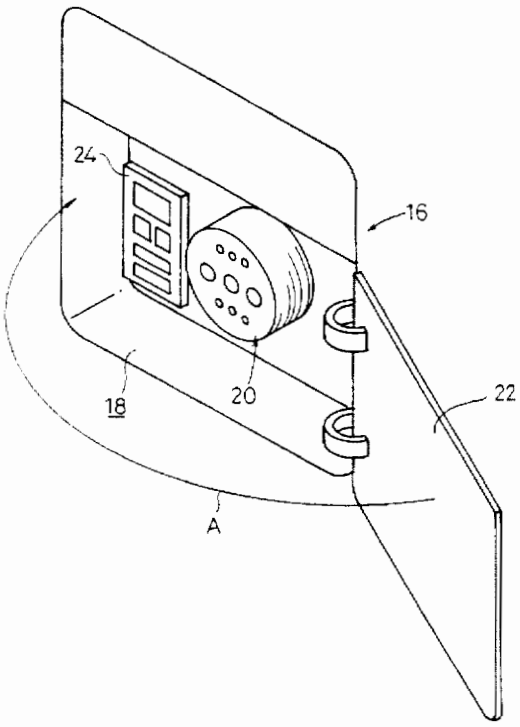

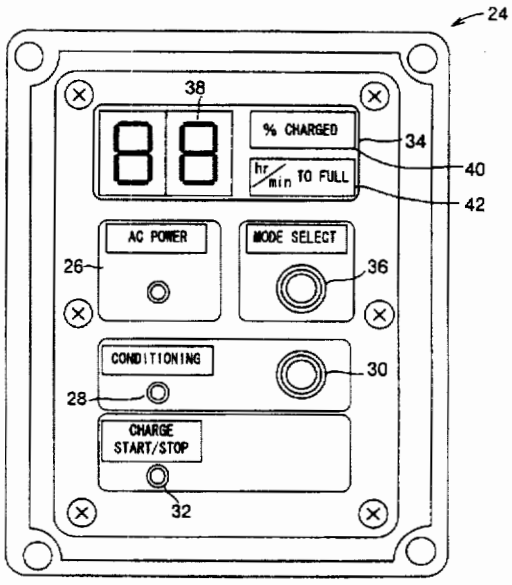

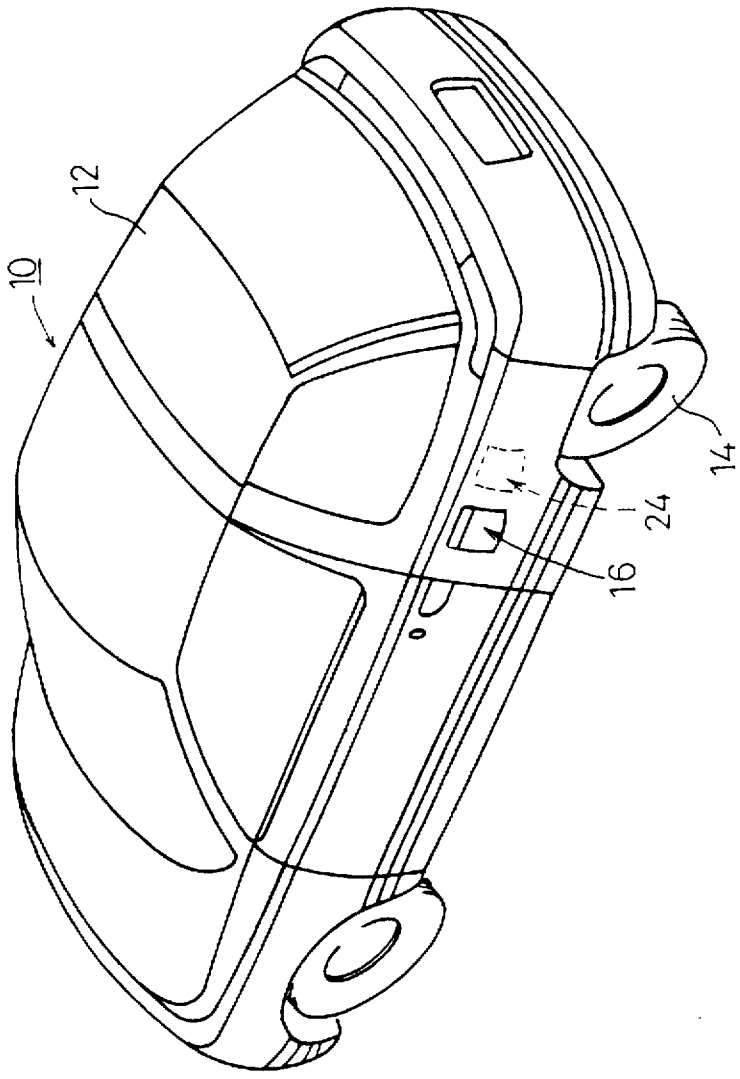

FIG. 1

FIG. 2

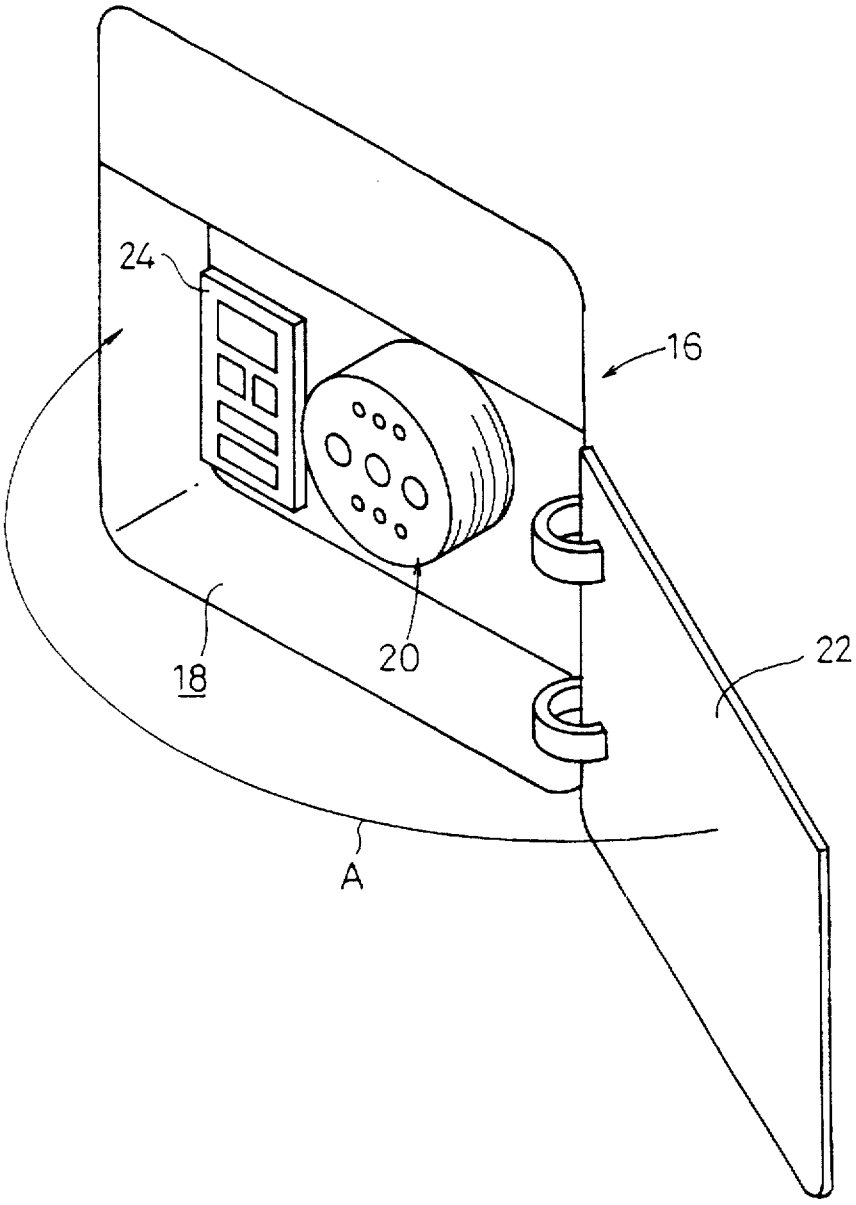

FIG.3

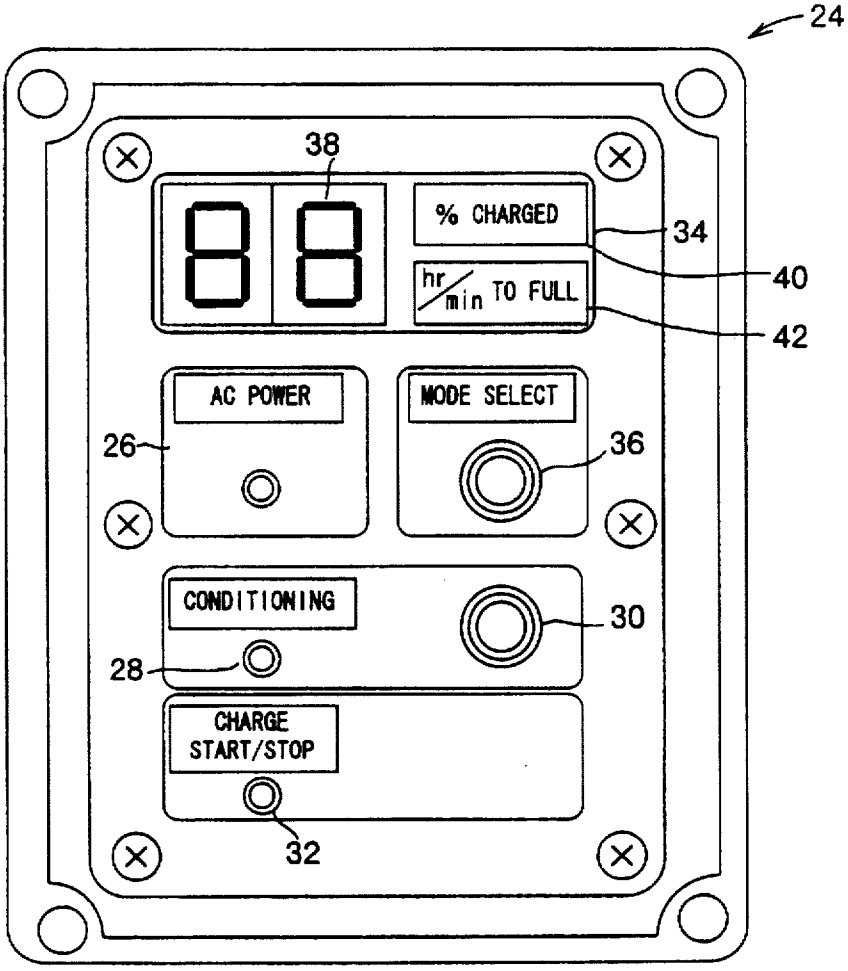
24
38
% CHARGED
34
40
hr/min TO FULL
42
AC POWER
MODE SELECT
26
36
CONDITIONING
30
28
CHARGE
START/STOP
32

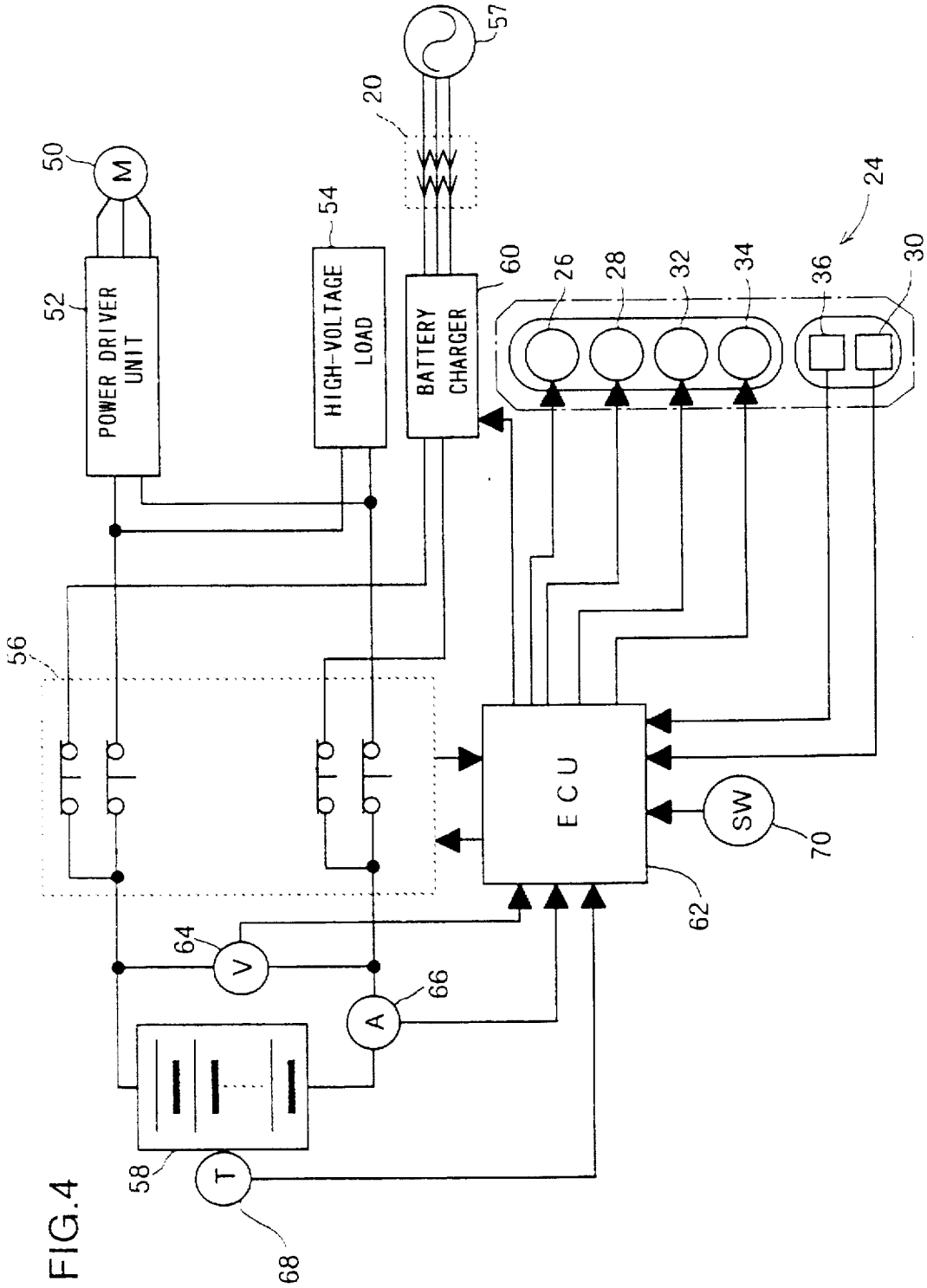
POWER DRIVER UNIT
HIGH-VOLTAGE LOAD
BATTERY CHARGER
ECU
SW
M
V
A
T
50
52
54
56
57
58
60
62
64
66
68
70
20
24
26
28
30
32
34
36

FIG.4

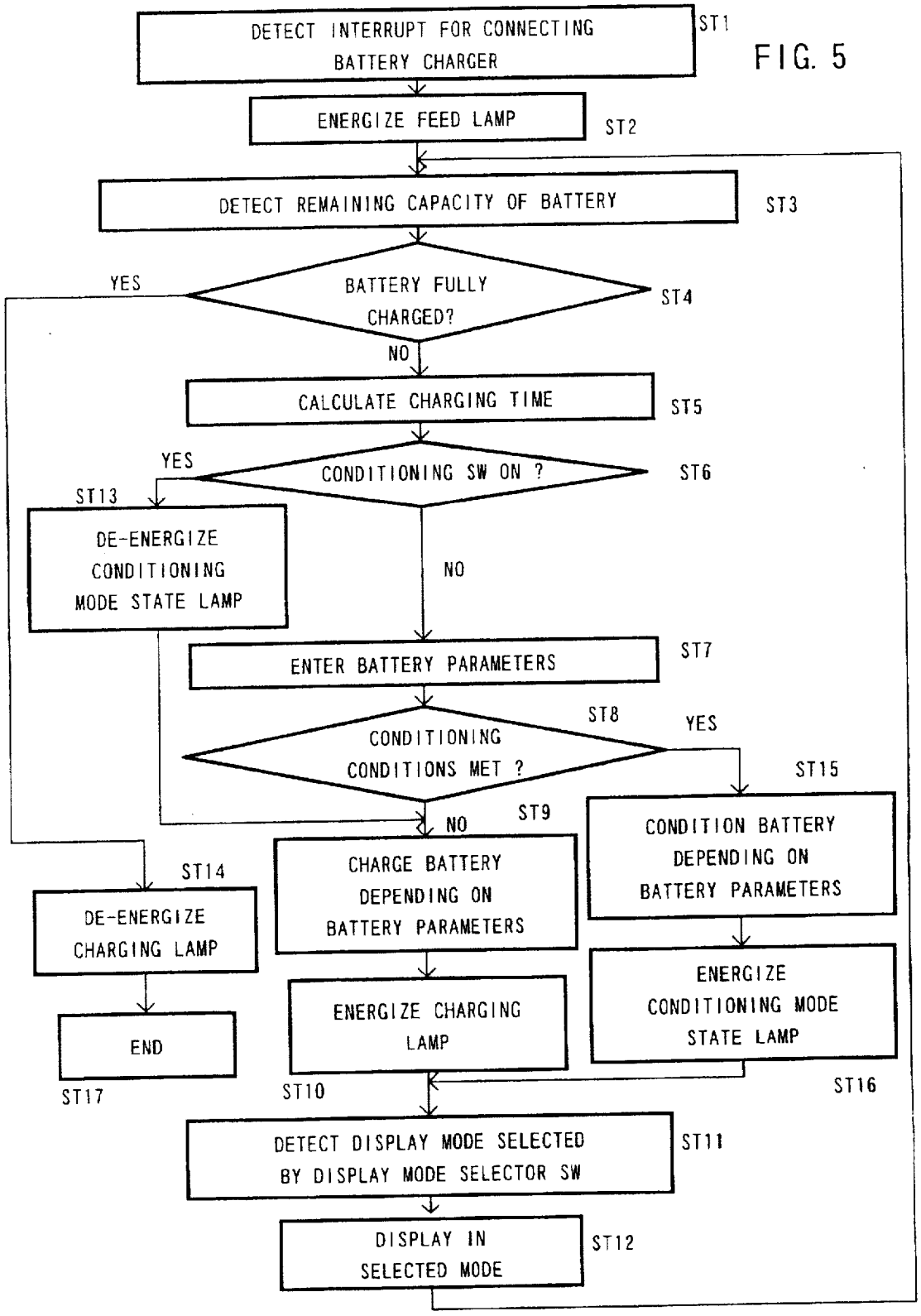
DETECT INTERRUPT FOR CONNECTING BATTERY CHARGER
ST1
FIG. 5
ENERGIZE FEED LAMP
ST2
DETECT REMAINING CAPACITY OF BATTERY
ST3
YES
BATTERY FULLY CHARGED?
ST4
NO
CALCULATE CHARGING TIME
ST5
YES
CONDITIONING SW ON ?
ST6
ST13
DE-ENERGIZE CONDITIONING MODE STATE LAMP
NO
ENTER BATTERY PARAMETERS
ST7
ST8
YES
CONDITIONING CONDITIONS MET ?
ST15
NO
ST9
CONDITION BATTERY DEPENDING ON BATTERY PARAMETERS
ST14
CHARGE BATTERY DEPENDING ON BATTERY PARAMETERS
DE-ENERGIZE CHARGING LAMP
ENERGIZE CONDITIONING MODE STATE LAMP
END
ENERGIZE CHARGING LAMP
ST17
ST10
ST16
DETECT DISPLAY MODE SELECTED BY DISPLAY MODE SELECTOR SW
ST11
DISPLAY IN SELECTED MODE
ST12

APPARATUS FOR DISPLAYING BATTERY CHARGING OF ELECTRIC VEHICLE

BACKGROUND OF THE INVENTION

Field of the Invention

The present invention relates to an apparatus for displaying the charging of the battery of an electric vehicle, and more particularly to an apparatus for selectively displaying the state of charge of the battery of an electric vehicle, a period of time that is required until the battery is fully charged, etc., while the battery is being charged by a battery charger.

Description of the Related Art

Recent years have seen much attention attracted to electric vehicles as pollution-free mobile units. Generally, electric vehicles have an electric motor as a propulsion source and a storage battery which energizes the electric motor. Since the electric motor consumes a large amount of electric energy and various other devices such as electric accessories mounted on the electric vehicle also consume a large amount of electric energy, the battery, even if it is of a large storage capacity, needs to be charged by a battery charger in a charging station especially when the electric vehicle is run over a long distance. For charging the battery, the electric vehicle has a charging connector mounted on an outer side panel of the body thereof as an electric energy feeding port for supplying electric energy to the battery, just like a fuel inlet on an automobile propelled by an internal combustion engine.

The battery on the electric vehicle is charged through the charging connector while the electric vehicle is at rest. Whether the battery is being charged or not or whether the charging process is finished or not is generally confirmed on the side of the battery charger or by an indication on an indicator mounted on an instrumental panel in the passenger's compartment of the electric vehicle (see, for example, Japanese laid-open patent publication No. 4-334907). Checking an indication on the indicator on the instrumental panel has been awkward for the following reasons: While the battery is being charged, the electric system on the electric vehicle is shut off. Therefore, after the battery is charged for a certain period of time, the electric system on the electric vehicle is turned on to enable the indicator on the instrumental panel to indicate the state of charge of the battery. If the battery has not been sufficiently charged as indicated by the indicator, then the electric system has to be turned off and the battery needs to be recharged.

Consequently, it has been customary to use an indicator on the battery charger outside of the electric vehicle for the driver to confirm whether the battery is being charged or not or whether the battery has been fully charged or not. If the battery charger or the indicator on the battery charger is positioned a substantial distance away from the electric vehicle that is being charged, then the driver is required to move from the electric vehicle to the indicator for confirming the state of charge of the battery. The driver cannot easily confirm whether the battery is being charged or not or whether the battery has been fully charged or not.

To eliminate the above drawbacks, the applicant has proposed the use of an indication device such as an indicator, a lamp, or the like located near the lid of a charging connector of an electric vehicle for indicating the state of charge of the battery on the electric vehicle thereby to enable the driver to confirm whether the battery is being charged or not or whether the battery has been fully charged or not, as disclosed in Japanese laid-open patent publication No. 7-87607.

The present invention has been made in connection with the technical concept disclosed in Japanese laid-open patent publication No. 7-87607.

SUMMARY OF THE INVENTION

It is a general object of the present invention to provide an apparatus for displaying the state of charge of the battery of an electric vehicle to enable the driver of the electric vehicle to easily recognize the state of charge of the battery from outside of the electric vehicle.

A major object of the present invention is to provide an apparatus for displaying the state of charge of the battery of an electric vehicle to enable the driver of the electric vehicle to easily confirm, from outside of the electric vehicle, whether the battery has been charged to the extent which allows the electric vehicle to run sufficiently or how much time is needed until the battery is fully charged, when the driver finds it necessary to drive the electric vehicle in the process of charging the battery.

Another object of the present invention is to provide an apparatus for displaying the state of charge of the battery of an electric vehicle to enable the driver of the electric vehicle to easily confirm a period of time required until the battery is fully charged or a charged capacity of the battery, in the process of charging the battery.

Still another object of the present invention is to provide an apparatus for displaying the state of charge of the battery of an electric vehicle to enable the driver of the electric vehicle to recognize the state of charge of the battery from outside of the electric vehicle when the driver finds it necessary to drive the electric vehicle in the process of charging the battery, by operating a selector switch to display a remaining period of time required until the battery is fully charged or a percentage of the fully charged capacity of the battery to which the battery is presently charged.

A further object of the present invention is to provide an apparatus for displaying the state of charge of the battery of an electric vehicle to enable the driver of the electric vehicle to easily determine whether the battery is being conditioned, e.g., heated or cooled, in the process of charging the battery, so that the driver can stop the charging process without error when the driver finds it necessary to drive the electric vehicle in the process of charging the battery.

The above and other objects, features and advantages of the present invention will become more apparent from the following description when taken in conjunction with the accompanying drawings in which a preferred embodiment of the present invention is shown by way of illustrative example.

BRIEF DESCRIPTION OF THE DRAWINGS

FIG. 1 is a perspective view of an electric vehicle which incorporates a battery charging display apparatus according to the present invention;

FIG. 2 is an enlarged perspective view of an electric energy feeding unit on the electric vehicle shown in FIG. 1;

FIG. 3 is a plan view of a display panel of the electric energy feeding unit shown in FIG. 2;

FIG. 4 is a block diagram of an electric system on the electric vehicle shown in FIG. 1; and

FIG. 5 is a flowchart of an operation sequence of the battery charging display apparatus according to the present invention.

DETAILED DESCRIPTION OF THE PREFERRED EMBODIMENT

As shown in FIG. 1, an electric vehicle **10** which incorporates a battery charging display apparatus according to the present invention includes a vehicle body **12** having an electric energy feeding unit **16** on a rear outer side panel thereof near a rear wheel **14**.

FIG. 2 shows the electric energy feeding unit **16** at an enlarged scale. The rear outer side panel of the vehicle body **12** has a cavity **18** defined therein. The electric energy feeding unit **16** comprises a charging connector **20** disposed in the cavity **18**. The cavity **18** is openably closed by a lid **22** which is hinged to the rear outer side panel of the vehicle body **12** for closing movement as indicated by the arrow A. The electric energy feeding unit **16** also includes a display panel **24** disposed in the cavity **18** near the charging connector **20** for displaying the state of charge of the battery on the electric vehicle **10**. The display panel **24** may be disposed on an outer surface of the rear outer side panel of the vehicle body **12** near the lid **22** as indicated by the imaginary line in FIG. 1.

FIG. 3 shows in front elevation the display panel **24** as a display means. The display panel **24** comprises a feed lamp **26** which is energized when electric energy of AC 200/100 volts is supplied to the charging connector **20**, a conditioning mode state lamp **28** which is energized in either one of three conditioning modes including a heating mode for heating the battery, a cooling mode for cooling the battery after it has been charged, and a temporary charging stop mode for temporarily stopping charging of the battery, a conditioning mode state selector switch **30** for selecting a state (canceled or not canceled) of each of the conditioning modes, a charging lamp **32** which is energized in a charging mode for charging the battery and de-energized when the charging of the battery is completed, a charging indicator **34** for displaying the state of charge of the battery, and a display mode selector switch **36** for selecting a display mode of the charging indicator **34**. The charging indicator **34** includes a digital display unit **38**, a remaining capacity display unit **40**, and a remaining charging time display unit **42**.

The conditioning mode state selector switch **30** comprises a pushbutton switch for canceling the heating mode while the battery is being charged, the cooling mode after the battery is charged, or the temporary charging stop mode. For example, when the conditioning mode state selector switch **30** is pushed or turned on, the heating mode is canceled. When the conditioning mode state selector switch **30** is pushed again or turned off while the battery is being charged with the heating mode canceled, the heating mode is resumed.

Each time the display mode selector switch **36** is pushed, three display modes including a display mode for displaying a remaining capacity of the battery, a display mode for displaying a remaining time needed until the battery is fully charged, and a display mode for de-energizing display units are cycled. When the display mode for displaying a remaining capacity of the battery is selected by the display mode selector switch **36**, the digital display unit **38** displays a remaining capacity of the battery as a percentage in a digital representation, and the remaining capacity display unit **40** is energized. When the display mode for displaying a remaining time needed until the battery is fully charged is selected by the display mode selector switch **36**, the digital display unit **38** displays a remaining time needed until the battery is fully charged as hours or minutes in a digital representation, and the remaining charging time display unit **42** is energized.

FIG. 4 shows in block form an electric system on the electric vehicle shown in FIG. 1. As shown in FIG. 4, an electric motor **50** as a propulsion unit of the electric vehicle is connected to a power drive unit **52**. The power drive unit **52** and a high-voltage load **54** on the electric vehicle are connected through a junction device **56** to a battery **58**. The junction device **56** is connected through a battery charger **60** which is connected through the charging connector **20** to an AC power supply **57**. The battery charger **60** is selectively connected to the battery **58** through the junction device **56**.

The junction device **56** is controlled by a management ECU **62** which comprises a microprocessor. The management ECU **62** is connected to a voltmeter **64**, an ammeter **66**, and a temperature sensor **68** which jointly serve to detect a load on the battery **58**, and controls the junction device **56** depending on the detected load on the battery **58**.

The management ECU **62** is connected to a lid switch **70** for detecting whether the lid **22** is opened or closed, and the display panel **24**. Depending on the states of operation of the lid switch **70**, the conditioning mode state selector switch **30**, and the display mode selector switch **36**, the management ECU **62** controls energization of the feed lamp **26**, the conditioning mode state lamp **28**, and the charging lamp **32**. The management ECU **62** calculates the state of charge of the battery **58** from measured values from the voltmeter **64** and the ammeter **6**, and controls the charging indicator **34** to selectively display on the digital display unit **38** a remaining capacity of the battery and a remaining time needed until the battery is fully charged depending on the state of operation of the display mode selector switch **36**.

Operation of the battery charging display apparatus according to the present invention will be described below with reference to FIGS. 4 and 5.

When the charging connector **20** is connected to the AC power supply **57**, the battery charger **60** is connected to the AC power supply **57**. The management ECU **62** detects the connection between the battery charger **60** and the AC power supply **57**, and controls the junction device **56** to connect the battery charger **60** to the battery **58**, starting to charge the battery **58**. The management ECU **62** detects an interrupt for the connection of the battery charger **60** in a step ST1, and then energizes the feed lamp **26** in a step ST2.

Then, the management ECU **62** reads measured values from the voltmeter **64** and the ammeter **66** which are connected to the battery **58**, and calculates the remaining capacity of the battery **58** as the state of charge thereof from the measured values in a step ST3. The management ECU **62** determines whether the battery **58** is fully charged or not based on the calculated remaining capacity of the battery **58** in a step ST4. If the battery **58** is fully charged, then control goes to a step ST14. If the battery **58** is not fully charged, then control proceeds to a step ST5. The calculated remaining capacity of the battery **58** may be stored in a backup memory of the management ECU **62** as an accumulated value which has been calculated by subtracting a value depending on a discharging current from and adding a value depending on a recharging current to the fully charged capacity of the battery **58** which is 100%, and the stored calculated remaining capacity may be read from the backup memory by the management ECU **62** before the battery **58** starts to be charged.

In the step ST14, the management ECU **62** de-energizes the charging lamp **32**. Then, control comes to an end in a step ST17.

In the step **5**, the management ECU **62** calculates the period of time required until the battery **58** is fully charged.

Then, the management ECU **62** checks the conditioning mode state selector switch **30** for its state, i.e., whether it is turned on or off, in a step ST6. Generally, the time required to charge the battery **58**, i.e., the charging efficiency thereof, varies depending on the temperature of the battery **58** or the ambient temperature around the battery **58**. If the temperature of the battery **58** or the ambient temperature around the battery **58** is too low, then the time required to charge the battery **58** can be shortened when the battery **58** is charged while it is being heated. After the battery **58** is charged, it is cooled. Such a process is referred to as a conditioning control process. As described above, the conditioning mode state selector switch **30** serves to cancel the heating mode while the battery is being charged, the cooling mode after the battery is charged, or the temporary charging stop mode. For example, when the conditioning mode state selector switch **30** is pushed or turned on, the heating mode is canceled. When the conditioning mode state selector switch **30** is pushed again or turned off while the battery is being charged with the heating mode canceled, the heating mode is resumed.

If the conditioning mode state selector switch **30** is turned on, i.e., if the heating mode is canceled, in the step ST6, then the management ECU **62** de-energizes the conditioning mode state lamp **28** in a step ST13, which is followed by a step ST9. If the conditioning mode state selector switch **30** is turned off, i.e., if the heating mode is not canceled, in the step ST6, then control proceeds to a step ST7.

In the step ST7, the management ECU **62** reads battery parameters required for charging of the battery **58**, e.g., the remaining capacity, and the temperature and voltage of the battery **58**, from a memory or the like (not shown). Then, the management ECU **62** detects the temperature of the battery **58** based on the measured value from the temperature sensor **58**, and checks conditioning conditions to determine whether the battery **58** is to be conditioned or not in a step ST8. If the battery **58** is not to be conditioned ("NO" in the step ST8), then the management ECU **62** charges the battery **58** depending on the battery parameters in a step ST9, and energizes the charging lamp **32** in a step ST10. Thereafter, control goes to a step ST11.

If the battery **58** is to be conditioned ("YES" in the step ST8), then the management ECU **62** carries out the heating mode to heat the battery **58** depending on the battery parameters in a step ST15, and energizes the conditioning mode state lamp **28** in a step ST16. Thereafter, control goes to the step ST11.

In the step ST11, the management ECU **62** detects the display mode selected by the display mode selector switch **36**. As described above, each time the display mode selector switch **36** is pushed, the three display modes including the display mode for displaying a remaining capacity of the battery, the display mode for displaying a remaining time needed until the battery is fully charged, and the display mode for de-energizing display units are cycled. The management ECU **62** displays the state of charge of the battery **58** on the charging indicator **34** in the detected display mode selected by the display mode selector switch **36** in a step ST12.

As described above, when the display mode for displaying a remaining capacity of the battery is selected by the display mode selector switch **36**, the management ECU **62** controls the digital display unit **38** to display the remaining capacity of the battery as a percentage in a digital representation, and also energizes the remaining capacity display unit **40**. When the display mode for displaying a remaining time needed until the battery is fully charged is selected by the display mode selector switch **36**, the management ECU **62** controls the digital display unit **38** displays the remaining time needed until the battery is fully charged as hours or minutes in a digital representation, and also energizes the remaining charging time display unit **42**.

After the step ST12, control returns to the step ST3, and the management ECU **62** repeats the steps ST3—ST12 until the full charging of the battery **58** is detected in the step ST4. When the full charging of the battery **58** is detected in the step ST4, the management ECU **62** de-energizes the charging lamp **32**. Then, control is ended in the step ST17.

If a charge stop switch (not shown) is pressed when the driver finds it necessary to drive the electric vehicle in the process of charging the battery **58**, or the process of charging the battery **58** is to be interrupted because of a failure of the AC power supply **57** to supply electric energy to the charging connector **20**, then the management ECU **62** detects the cessation of the charging process, and controls the junction device **56** to disconnect the battery **58** from the battery charger **60** thereby stopping the charging process.

In the illustrated embodiment, the display panel **24** is shown as being disposed in the cavity **18** which houses the charging connector **20** and is openably closed by the lid **22**. However, the display panel **24** may be disposed in a suitable position near the electric energy feeding unit **16** in the side panel of the vehicle body **12**. The display panel **24** may simultaneously display both the time required to fully charge the battery **58** and the remaining capacity of the battery **58**, which are selectively displayed in the illustrated embodiment.

According to the present invention, as described above, the driver of the electric vehicle can easily confirm a period of time needed until the battery is fully charged or a remaining capacity or charged capacity of the battery while the battery is being charged, from the display panel **24** that can be visually checked from outside of the electric vehicle. The driver is therefore not required either to sit on the driver's seat, turn the ignition key to turn on the electric system of the electric vehicle, and confirm the state of charge of the battery with an indicator on the instrumental panel, or to confirm the state of charge of the battery with an indicator on the battery charger outside of the electric vehicle. Instead, the driver can recognize the remaining time required until the battery is fully charged and a percentage of the fully charged capacity of the battery to which the battery is presently charged, from outside of the electric vehicle. As a result, the driver can easily confirm the state of charge of the battery on the electric vehicle from outside of the electric vehicle.

Even when the driver finds it necessary to drive the electric vehicle while the battery is being charged, the driver can operate the selector switch to display the remaining time required until the battery is fully charged or a percentage of the fully charged capacity of the battery to which the battery is presently charged, from outside of the electric vehicle. Therefore, the driver can easily confirm the state of charge of the battery. Furthermore, the driver can also easily recognize whether the battery is conditioned, i.e., heated or cooled, while the battery is being charged. As a consequence, the driver can stop the charging process without error when the driver finds it necessary to drive the electric vehicle in the process of charging the battery.

Although a certain preferred embodiment of the present invention has been shown and described in detail, it should be understood that various changes and modifications may

be made therein without departing from the scope of the appended claims.

What is claimed is:

1. An apparatus for displaying a charging state of a battery of an electric vehicle, comprising:

a charging connector mounted in a cavity in an outer panel of a vehicle body of said electric vehicle;

a lid openably mounted on said outer panel of said electric vehicle in covering relation to said charging connector and said cavity defined in said outer panel;

display means, disposed in said cavity, for selectively displaying at least one of said charging states of a period of time required until said battery is fully charged and a charged capacity of said battery;

selecting means for selecting a display mode of said display means; and

wherein said display means further comprises:

means for selectively displaying at least one of said charging states of said period of time required until said battery is fully charged and said charged capacity of said battery based on a display mode selected by said selecting means, wherein said charged capacity of said battery is displayed as a remaining capacity in a digital percentage representation;

remaining capacity display unit enerzizable when said remaining capacity of said battery is displayed as a digital percentage; and

remaining time display unit energizable when said period of time required until said battery is fully charged is displayed.

2. The apparatus according to claim 1, wherein said display means includes conditioning mode state display means for displaying a conditioning mode to selectively at least one of heat and cool said battery.

3. An apparatus for displaying a charging state of said battery of an electric vehicle, comprising:

a charging connector mounted in a cavity in an outer panel of a vehicle body of said electric vehicle;

display means, mounted in said cavity in said outer panel near said charging connector, for selectively displaying at least one of said charging states of a period of time required until said battery is fully charged and a charged capacity of said battery;

selecting means for selecting a display mode of said display means; and

wherein said display means further comprises:

means for selectively displaying at least one of said charging states of said period of time required until said battery is fully charged and said charged capacity of said battery based on a display mode selected by said selecting means wherein said charged capacity of said battery is displayed as a remaining capacity in a digital percentage representation;

remaining capacity display unit energizable when said remaining capacity of said battery is displayed as a digital percentage; and

remaining time display unit energizable when said period of time required until said battery is fully charged is displayed.

4. The apparatus according to claim 3, wherein said display means includes conditioning mode state display means for displaying a conditioning mode to selectively at least one of heat and cool said battery.

5. An apparatus for displaying a charging state of a battery of an electric vehicle, comprising:

a charging connector mounted in a cavity in an outer panel of a vehicle body of said electric vehicle;

a lid openably mounted on said outer panel of said electric vehicle in covering relation to said charging connector and said cavity defmed in said outer panel; and

display means, disposed in said cavity, for displaying any one of said charging states of a period of time required until said battery is fully charged and a charged capacity of said battery, wherein said display means comprises:

means for displaying any one of said period of time required until said battery is fully charged and said charged capacity of said battery in a digital percentage representation; and

conditioning mode state display means for displaying a conditioning mode to any one of heat and cool said battery, wherein said conditioning mode state display means includes a conditioning mode state selector switch for cancelling anyone of a heating mode while said battery is being charged, a cooling mode after said battery is charged, and a temporary charging stop mode.

6. An apparatus for displaying a charging state of a battery of an electric vehicle, comprising:

a charging connector mounted in a cavity in an outer panel of a vehicle body of said electric vehicle; and

display means, mounted in said cavity in said outer panel near said charging connector, for displaying any one of said charging state of a period of time required until said battery is fully charged and a charged capacity of said battery, wherein said display means comprises:

means for displaying any one of said period of time required until said battery is fully charged and said charged capacity of said battery in a digital percentage representation; and

conditioning mode state display means for displaying a conditioning mode to any one of heat and cool said battery, wherein said conditioning mode state display means includes a conditioning mode state selector switch for cancelling anyone of a heating mode while said battery is being charged, a cooling mode after said battery is charged, and a temporary charging stop mode.

* * * * *