US008364309B1

(12) **United States Patent**
Bailey

(10) **Patent No.: US 8,364,309 B1**
(45) **Date of Patent: Jan. 29, 2013**

(54) **USER-ASSISTED ROBOT NAVIGATION SYSTEM**

(76) Inventor: **Bendrix L. Bailey**, Rochester, MA (US)

(*) Notice: Subject to any disclaimer, the term of this patent is extended or adjusted under 35 U.S.C. 154(b) by 765 days.

(21) Appl. No.: **12/502,699**

(22) Filed: **Jul. 14, 2009**

(51) **Int. Cl.**
G06F 19/00 (2011.01)

(52) **U.S. Cl.** **700/245**

(58) **Field of Classification Search** 901/1–50; 700/184, 183, 186–195, 245–264; 701/1, 701/23–27, 400–512, 516, 518, 521, 525, 701/527, 532, 538

See application file for complete search history.

(56) **References Cited**

U.S. PATENT DOCUMENTS

4,658,928 A * 4/1987 Seo 180/168
4,800,978 A * 1/1989 Wasa et al. 180/168
4,809,178 A * 2/1989 Ninomiya et al. 701/23
4,847,774 A * 7/1989 Tomikawa et al. 701/23
4,994,970 A * 2/1991 Noji et al. 701/25
5,189,612 A * 2/1993 Lemercier et al. 701/23
5,204,814 A * 4/1993 Noonan et al. 701/25
5,216,605 A * 6/1993 Yardley et al. 701/23
5,321,614 A * 6/1994 Ashworth 701/26
5,525,882 A * 6/1996 Asaka et al. 318/568.16
5,596,255 A * 1/1997 Miyazawa 318/568.12
5,677,836 A * 10/1997 Bauer 701/23
5,736,821 A * 4/1998 Suyama 318/16
5,764,014 A * 6/1998 Jakeway et al. 318/587
5,819,859 A * 10/1998 Stump et al. 175/26
5,938,704 A * 8/1999 Torii 701/23
6,076,025 A * 6/2000 Ueno et al. 701/23
6,255,793 B1 * 7/2001 Peless et al. 318/580
6,289,269 B1 * 9/2001 Seiferling 701/23
6,417,641 B2 * 7/2002 Peless et al. 318/580
6,463,368 B1 10/2002 Feiten et al.
6,465,982 B1 * 10/2002 Bergvall et al. 318/587
6,594,844 B2 7/2003 Jones
6,605,156 B1 * 8/2003 Clark et al. 134/6
6,615,108 B1 * 9/2003 Peless et al. 700/245
6,845,318 B1 1/2005 Moore et al.
6,885,912 B2 * 4/2005 Peless et al. 700/245
7,113,847 B2 9/2006 Chmura et al.
7,155,308 B2 12/2006 Jones
7,155,309 B2 * 12/2006 Peless et al. 700/245

(Continued)

OTHER PUBLICATIONS

"Enabling Your Robot to Keep Track of its Position" Revision 1.2, RidgeSoft, LLC, Pleasanton, CA: 2005, pp. 1-15.

Primary Examiner — Khoi Tran
Assistant Examiner — Bhavesh V Amin
(74) *Attorney, Agent, or Firm* — Cesari and McKenna, LLP; Michael R. Reinemann

(57) **ABSTRACT**

A system and method in which a user and a mobile robot cooperate to create a plan for use by the robot in navigating a space. The robot may include a tracking unit that detects the distance traveled and direction from a starting or home location and orientation. The robot also includes a navigation module that controls the movement of the robot based on a navigation plan received from a robot control utility residing at a workstation operated by the user. The robot further includes a position error correction engine that is configured to correct for position errors that may occur as the robot traverses the space. The position error correction engine receives data from one or more robot sensors that detect structures disposed below the surface over which the robot travels. As the robot encounters obstacles in the space, it enters them on the floor plan. The user then reviews the information added by the robot to the floor plan and accepts, rejects or modifies that information in order to create the navigation plan.

31 Claims, 14 Drawing Sheets

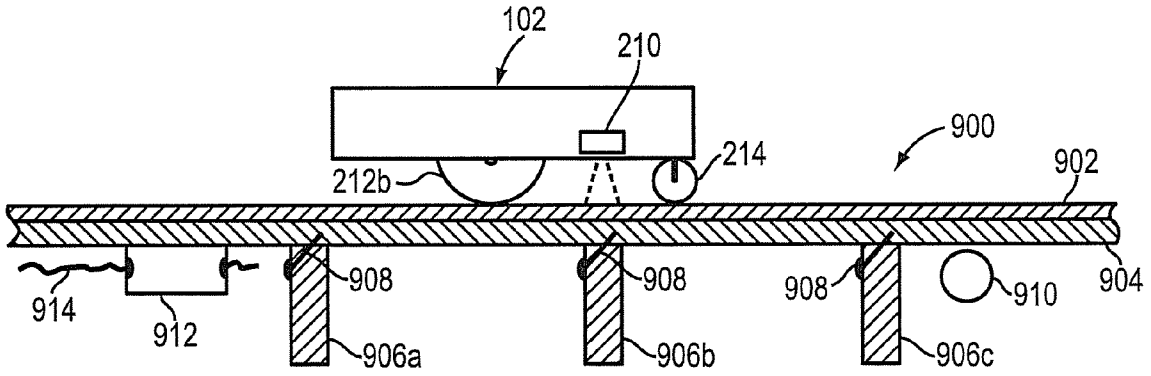

U.S. PATENT DOCUMENTS

7,170,252	B2 *	1/2007	Maeki	318/580
7,173,391	B2	2/2007	Jones et al.	
7,188,000	B2	3/2007	Chiappetta	
7,349,759	B2 *	3/2008	Peless et al.	700/245
7,429,843	B2 *	9/2008	Jones et al.	318/568.12
7,430,455	B2 *	9/2008	Casey et al.	700/245
7,451,027	B2 *	11/2008	Peteri et al.	701/41
7,729,801	B2 *	6/2010	Abramson	700/245
7,805,220	B2 *	9/2010	Taylor et al.	700/253
2002/0153184	A1 *	10/2002	Song et al.	180/167
2003/0028323	A1 *	2/2003	Zeitler et al.	701/219
2003/0216833	A1 *	11/2003	Mukai et al.	700/245
2004/0249509	A1 *	12/2004	Rogers et al.	700/245
2007/0267998	A1	11/2007	Cohen et al.	
2009/0030551	A1 *	1/2009	Hein et al.	700/253
2010/0241289	A1 *	9/2010	Sandberg	701/2

* cited by examiner

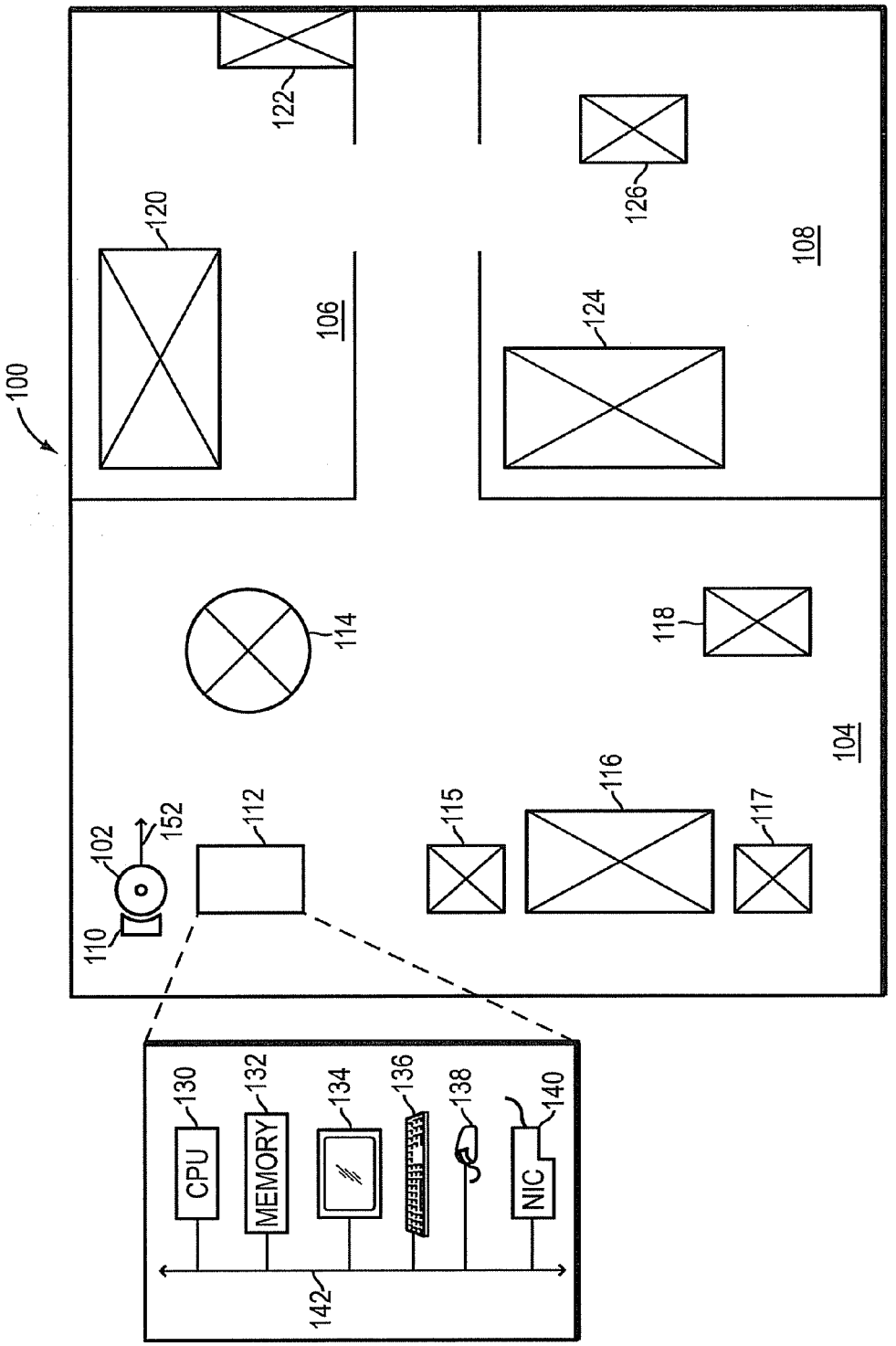
100
102
152
110
112
114
115
116
117
118
120
122
124
126
104
106
108
130
CPU
132
MEMORY
134
136
138
140
NIC
142

FIG. 1

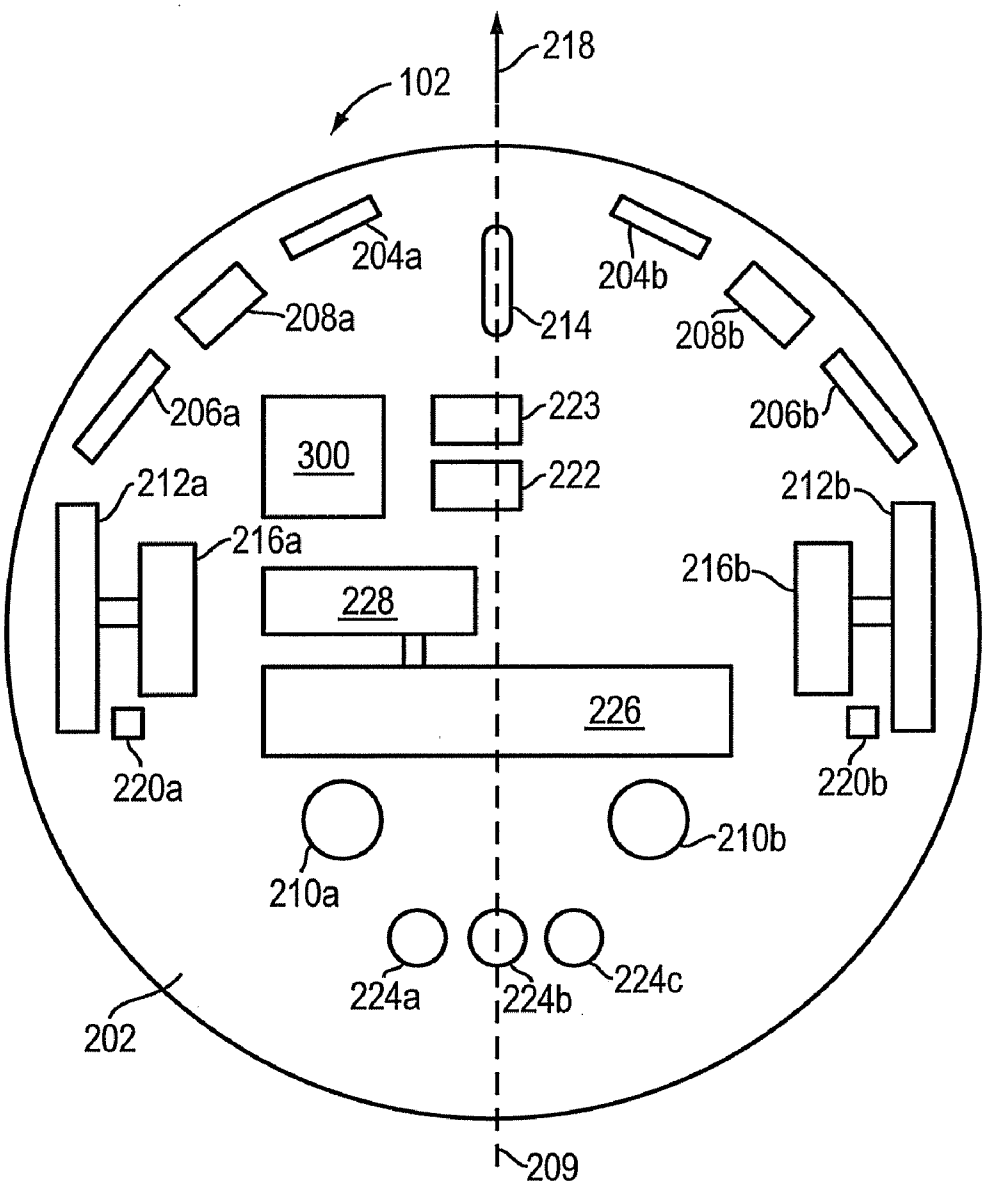
218
102
204a
204b
208a
214
208b
206a
223
206b
300
222
212a
212b
216a
216b
228
226
220a
220b
210a
210b
224a
224b
224c
202
209

FIG. 2

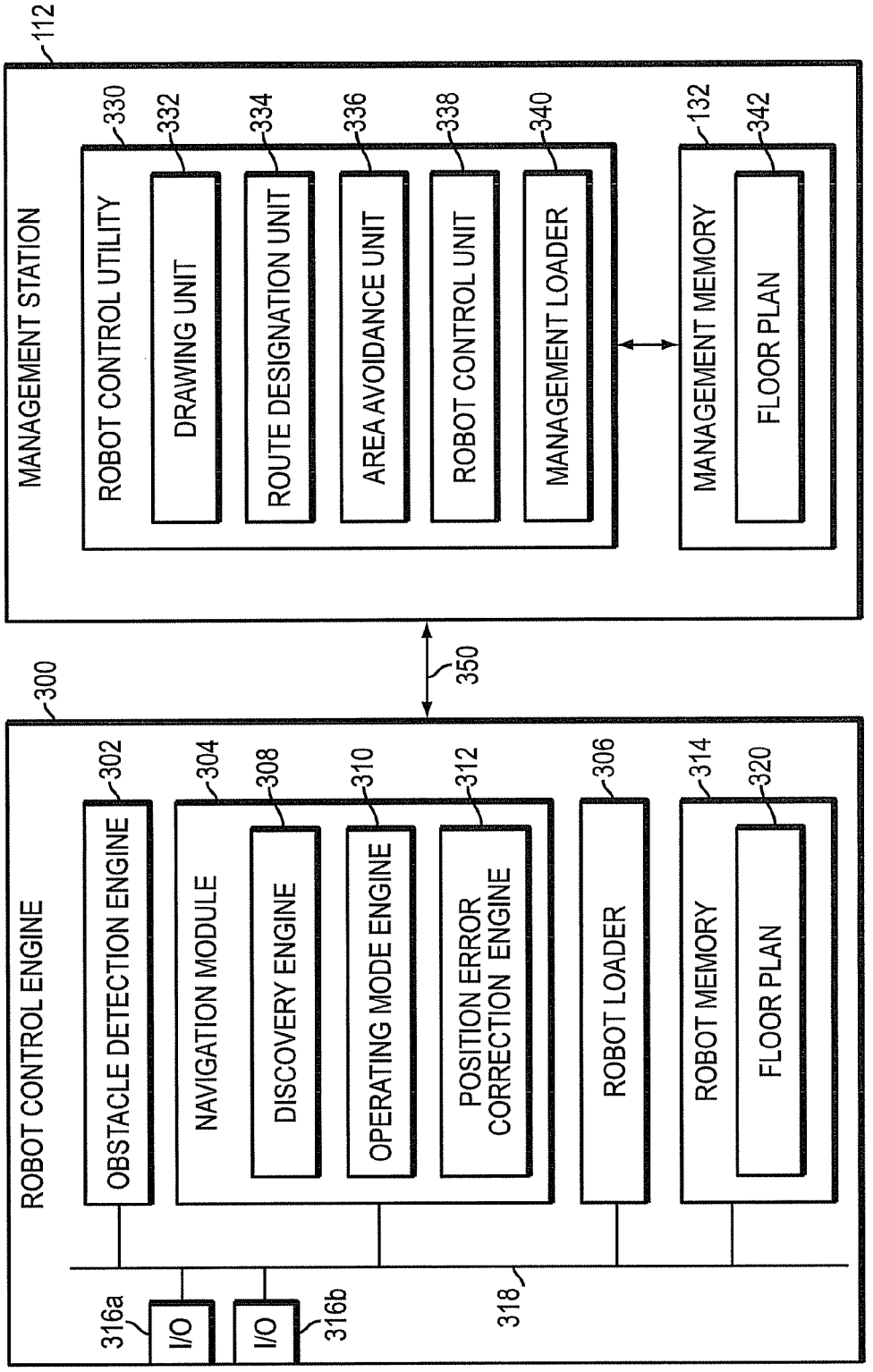
112
MANAGEMENT STATION
330
ROBOT CONTROL UTILITY
332
DRAWING UNIT
334
ROUTE DESIGNATION UNIT
336
AREA AVOIDANCE UNIT
338
ROBOT CONTROL UNIT
340
MANAGEMENT LOADER
132
MANAGEMENT MEMORY
342
FLOOR PLAN
350
300
ROBOT CONTROL ENGINE
302
OBSTACLE DETECTION ENGINE
304
NAVIGATION MODULE
308
DISCOVERY ENGINE
310
OPERATING MODE ENGINE
312
POSITION ERROR CORRECTION ENGINE
306
ROBOT LOADER
314
ROBOT MEMORY
320
FLOOR PLAN
316a
I/O
I/O
316b
318

FIG. 3

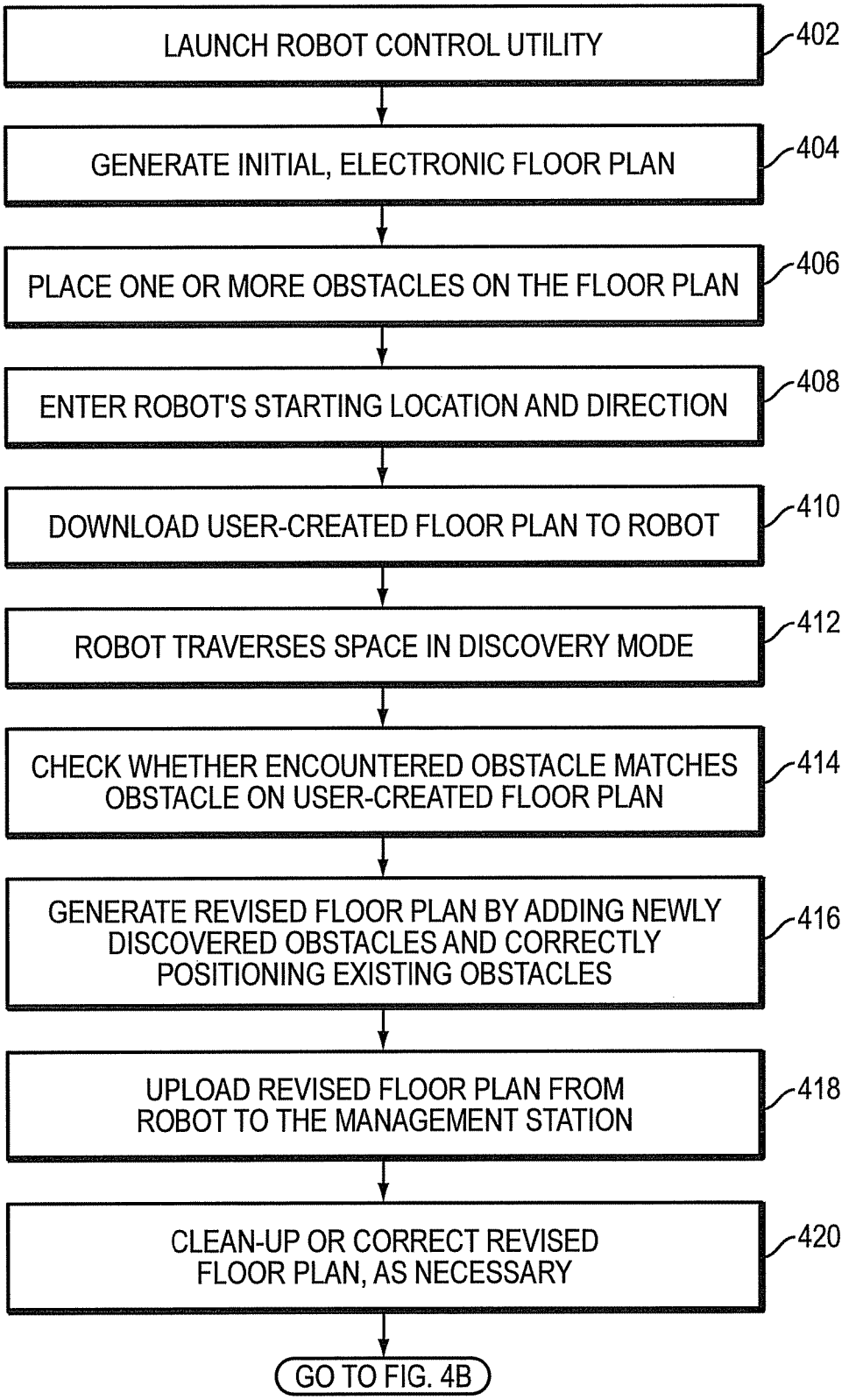
LAUNCH ROBOT CONTROL UTILITY
402
GENERATE INITIAL, ELECTRONIC FLOOR PLAN
404
PLACE ONE OR MORE OBSTACLES ON THE FLOOR PLAN
406
ENTER ROBOT'S STARTING LOCATION AND DIRECTION
408
DOWNLOAD USER-CREATED FLOOR PLAN TO ROBOT
410
ROBOT TRAVERSES SPACE IN DISCOVERY MODE
412
CHECK WHETHER ENCOUNTERED OBSTACLE MATCHES OBSTACLE ON USER-CREATED FLOOR PLAN
414
GENERATE REVISED FLOOR PLAN BY ADDING NEWLY DISCOVERED OBSTACLES AND CORRECTLY POSITIONING EXISTING OBSTACLES
416
UPLOAD REVISED FLOOR PLAN FROM ROBOT TO THE MANAGEMENT STATION
418
CLEAN-UP OR CORRECT REVISED FLOOR PLAN, AS NECESSARY
420
GO TO FIG. 4B

FIG. 4A

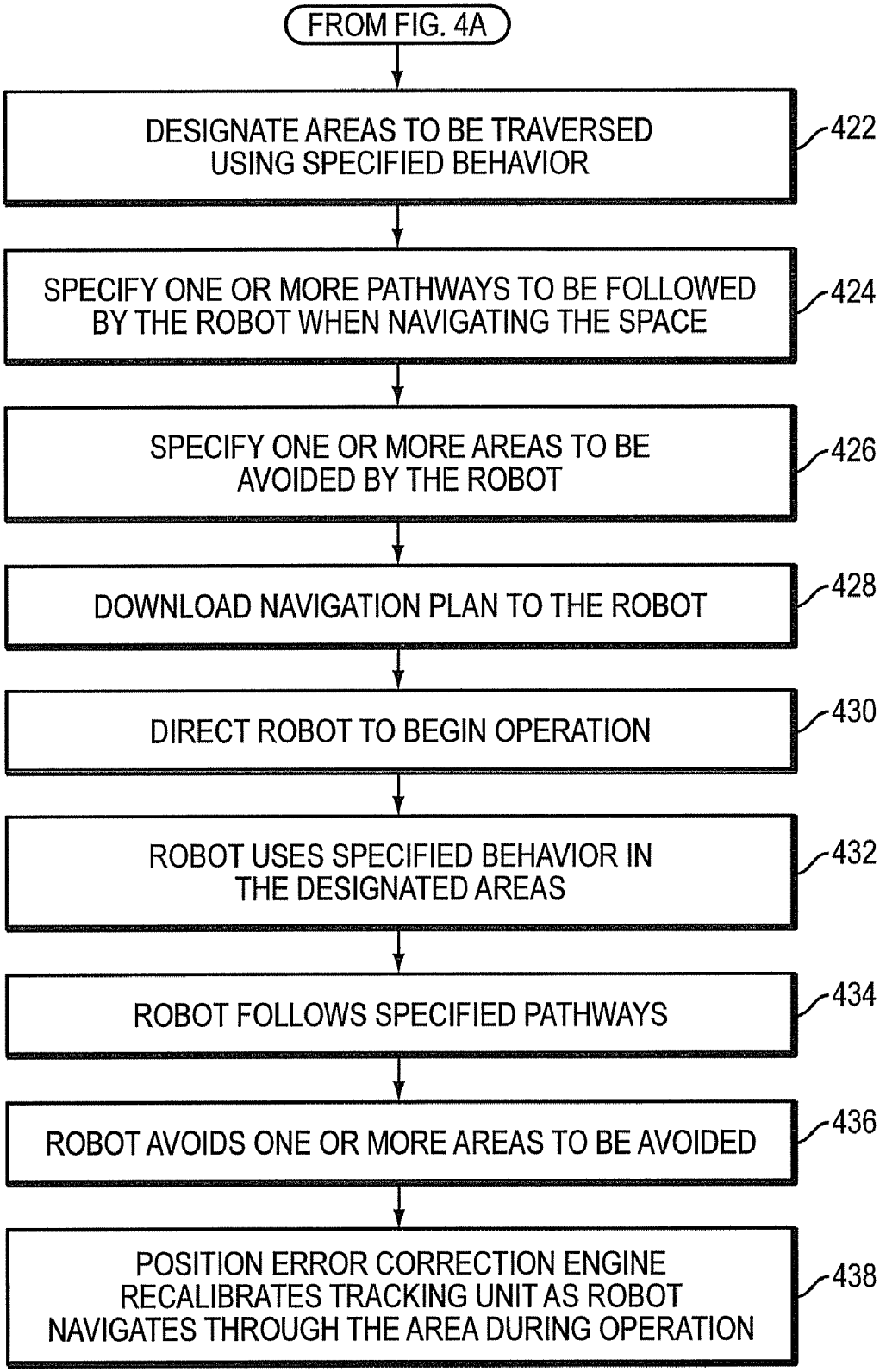
FROM FIG. 4A
DESIGNATE AREAS TO BE TRAVERSED USING SPECIFIED BEHAVIOR
422
SPECIFY ONE OR MORE PATHWAYS TO BE FOLLOWED BY THE ROBOT WHEN NAVIGATING THE SPACE
424
SPECIFY ONE OR MORE AREAS TO BE AVOIDED BY THE ROBOT
426
DOWNLOAD NAVIGATION PLAN TO THE ROBOT
428
DIRECT ROBOT TO BEGIN OPERATION
430
ROBOT USES SPECIFIED BEHAVIOR IN THE DESIGNATED AREAS
432
ROBOT FOLLOWS SPECIFIED PATHWAYS
434
ROBOT AVOIDS ONE OR MORE AREAS TO BE AVOIDED
436
POSITION ERROR CORRECTION ENGINE RECALIBRATES TRACKING UNIT AS ROBOT NAVIGATES THROUGH THE AREA DURING OPERATION
438

FIG. 4B

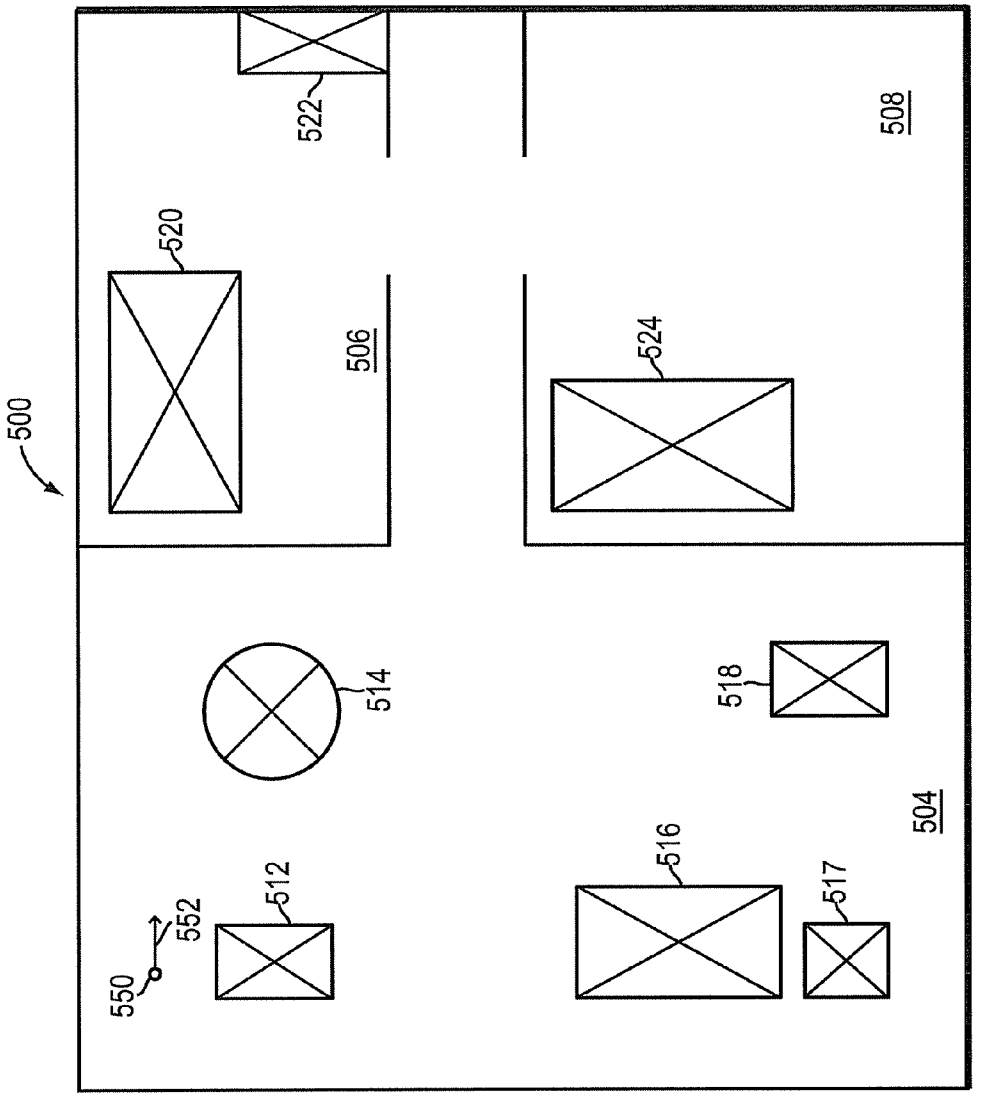

FIG. 5

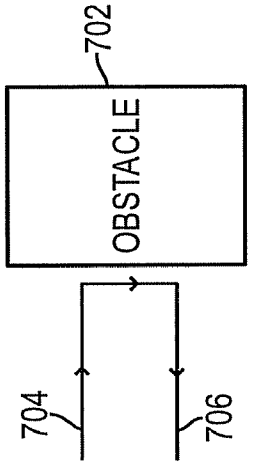

FIG. 7

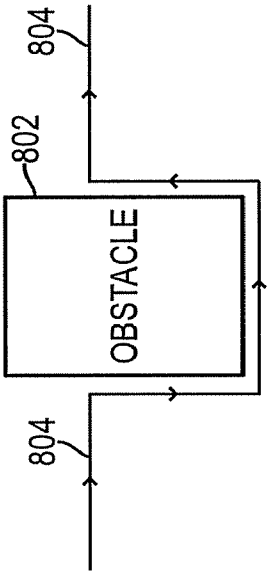

FIG. 8

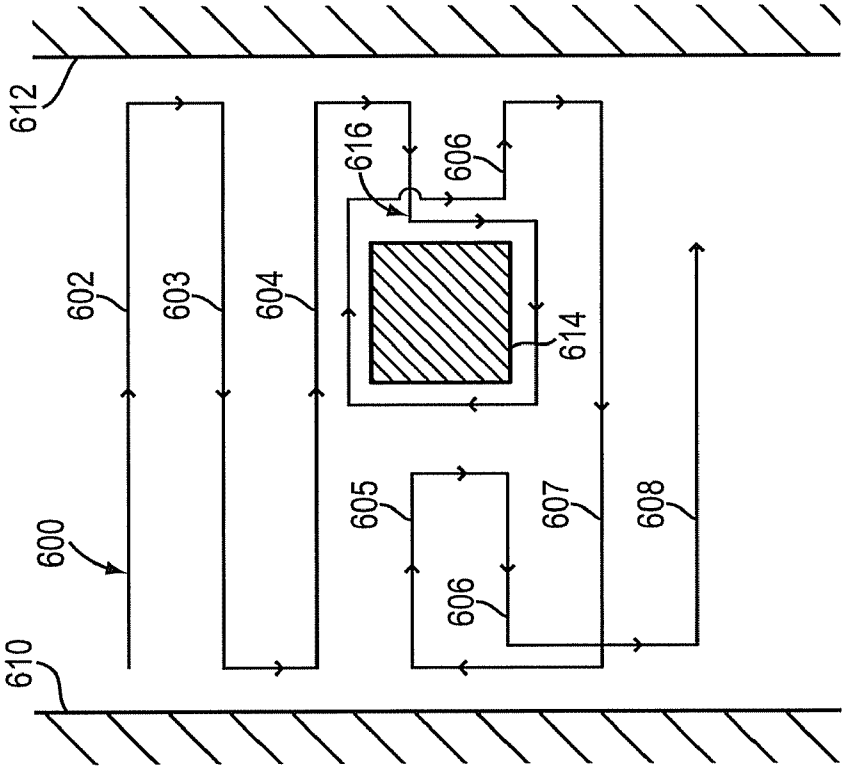

FIG. 6

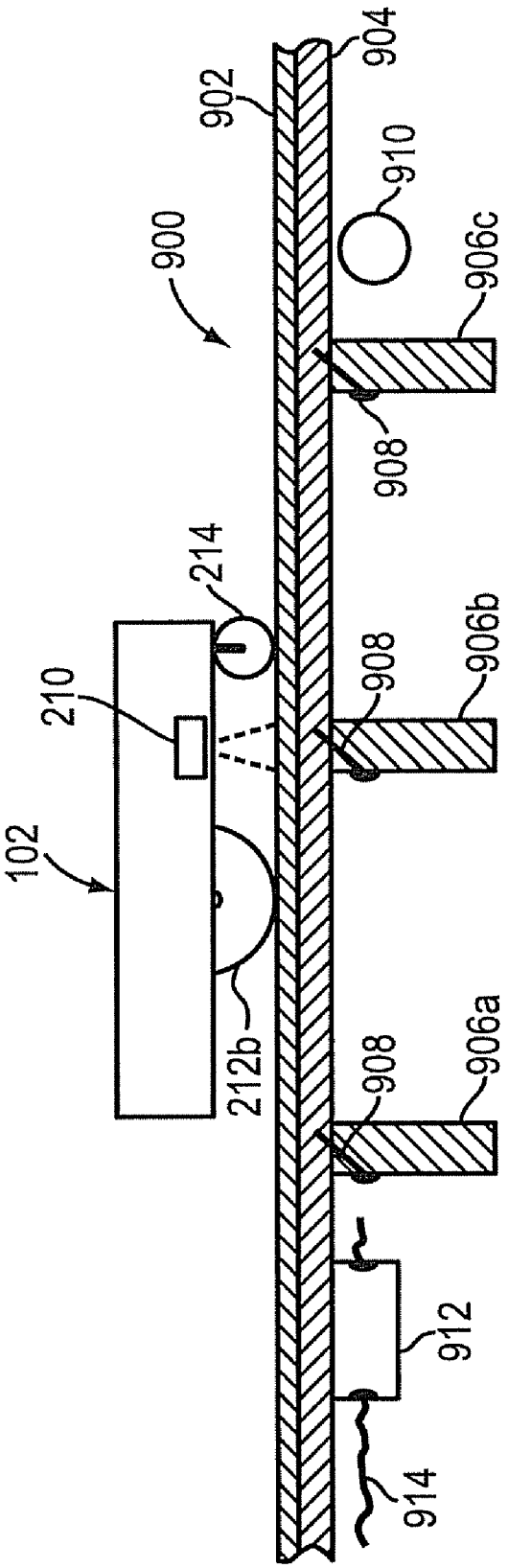
900
902
904
910
906c
908
214
210
906b
908
102
212b
908
906a
912
914

FIG. 9

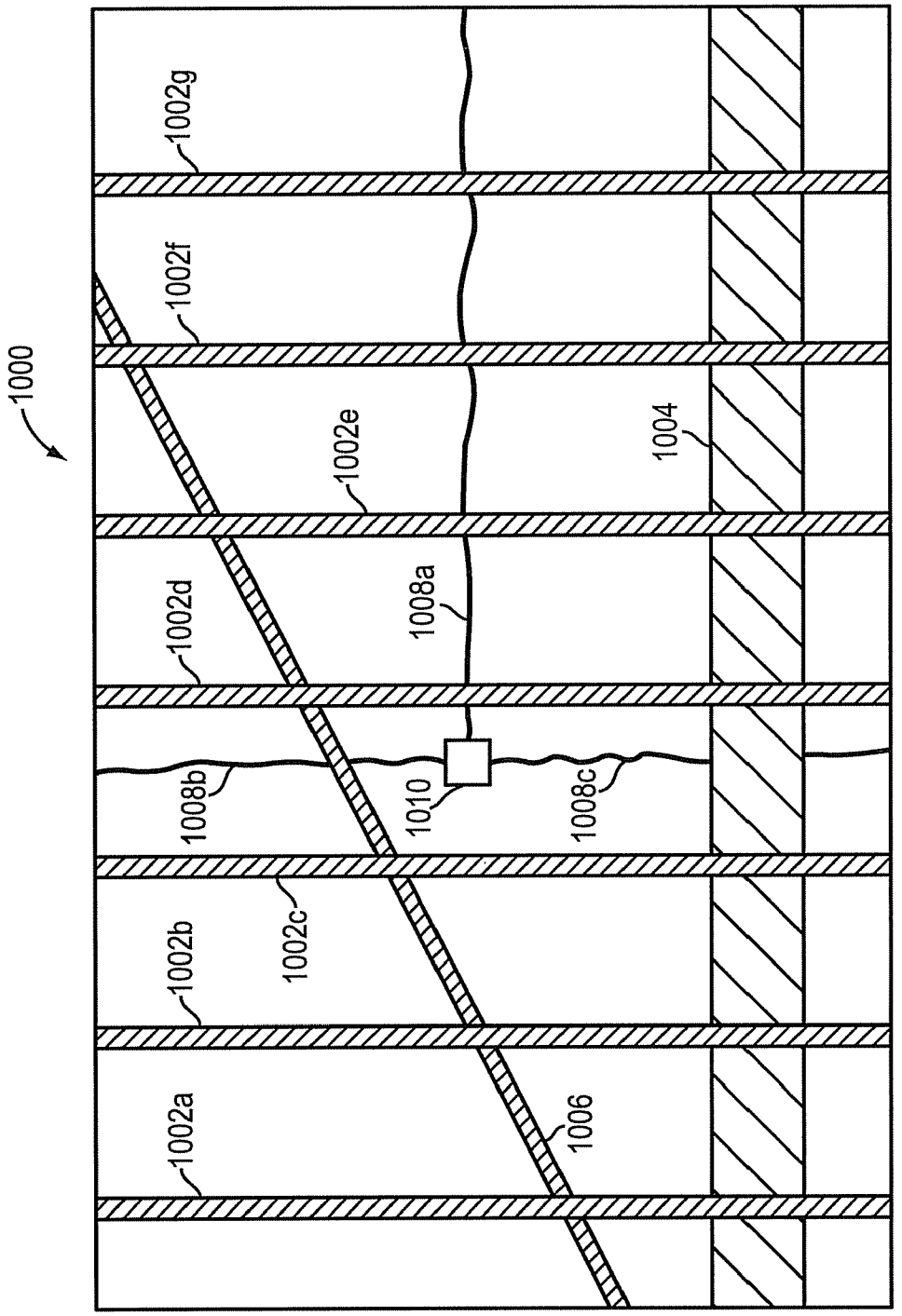
1000
1002g
1002f
1002e
1004
1002d
1008a
1008b
1010
1008c
1002c
1002b
1002a
1006

FIG. 10

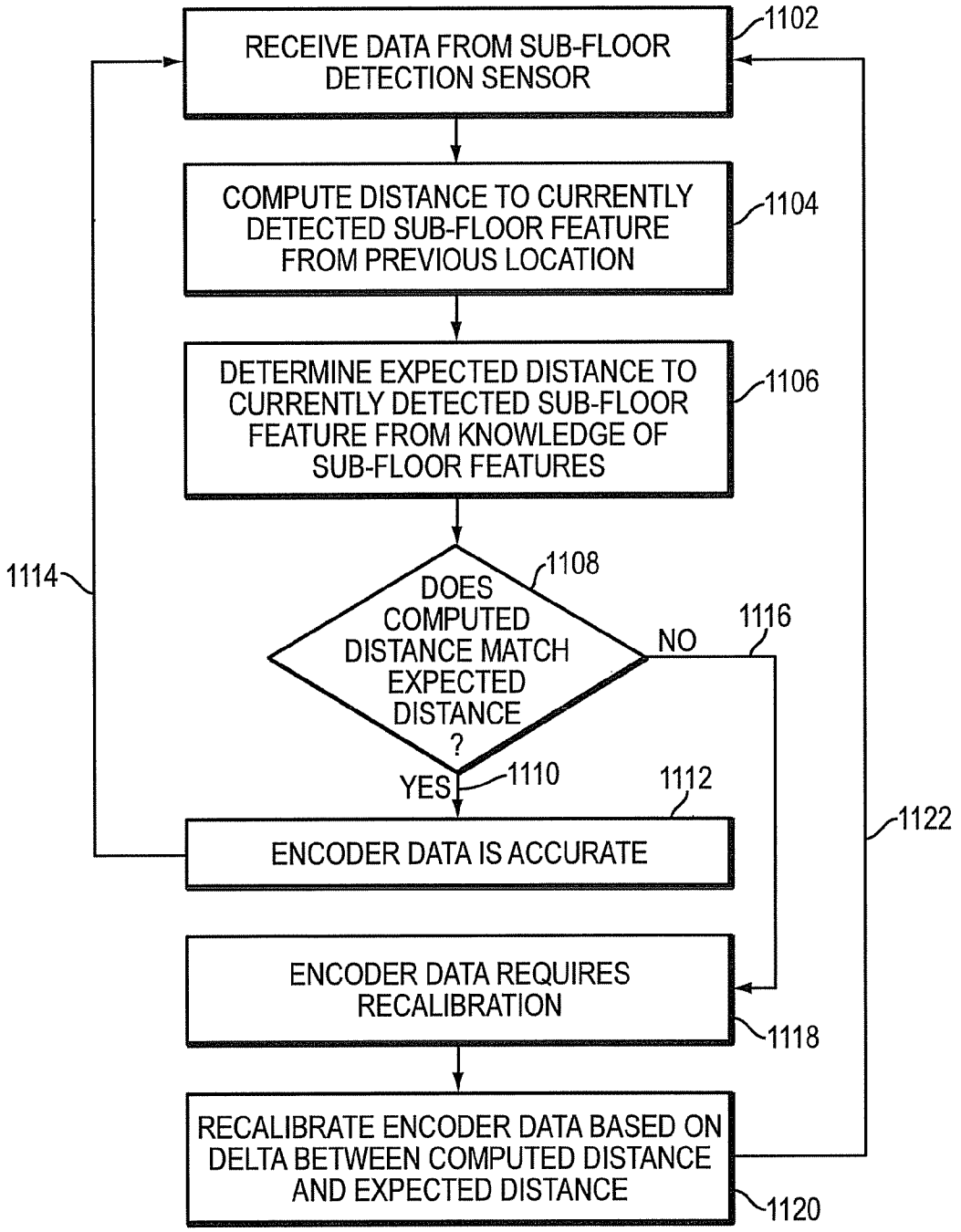
RECEIVE DATA FROM SUB-FLOOR DETECTION SENSOR
1102
COMPUTE DISTANCE TO CURRENTLY DETECTED SUB-FLOOR FEATURE FROM PREVIOUS LOCATION
1104
DETERMINE EXPECTED DISTANCE TO CURRENTLY DETECTED SUB-FLOOR FEATURE FROM KNOWLEDGE OF SUB-FLOOR FEATURES
1106
1114
DOES COMPUTED DISTANCE MATCH EXPECTED DISTANCE ?
1108
NO
1116
YES
1110
1112
ENCODER DATA IS ACCURATE
1122
ENCODER DATA REQUIRES RECALIBRATION
1118
RECALIBRATE ENCODER DATA BASED ON DELTA BETWEEN COMPUTED DISTANCE AND EXPECTED DISTANCE
1120

FIG. 11

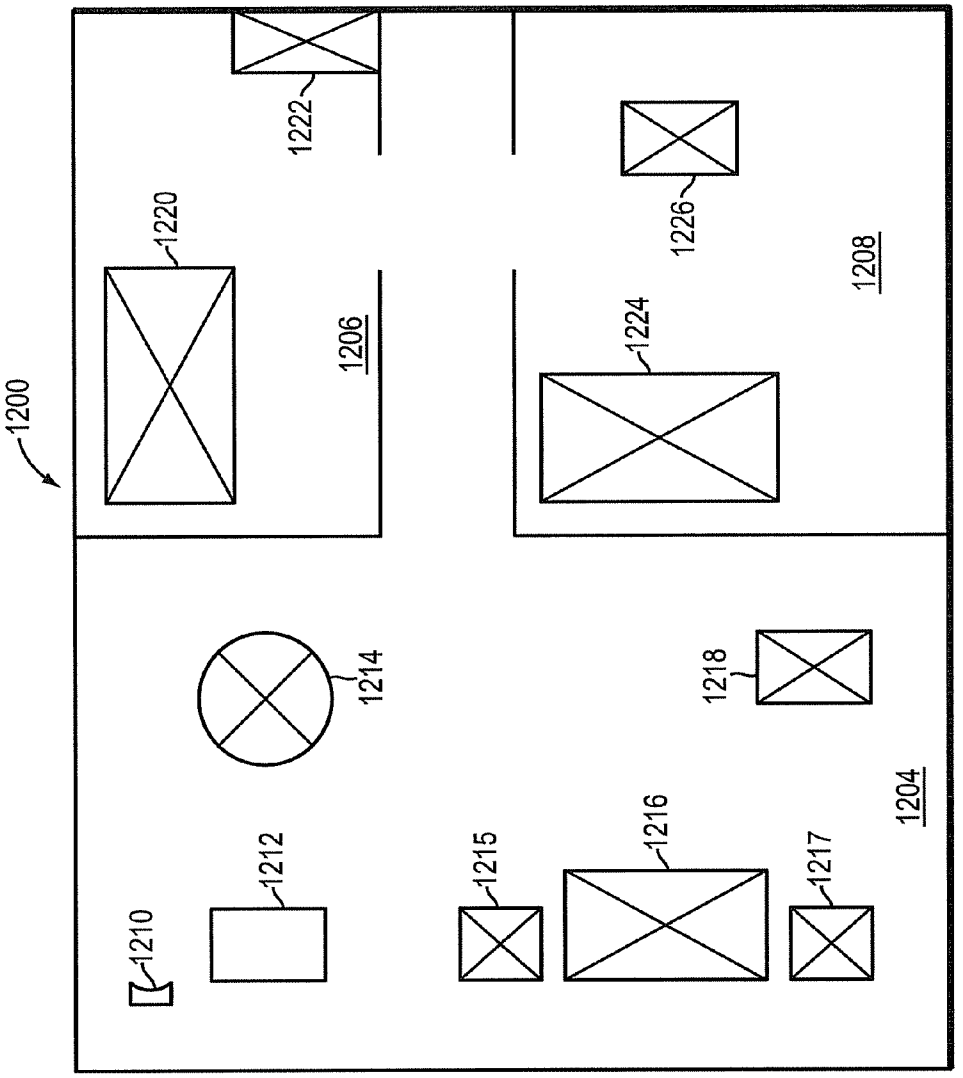
1200
1222
1220
1206
1226
1208
1224
1214
1218
1204
1216
1212
1215
1217
1210

FIG. 12

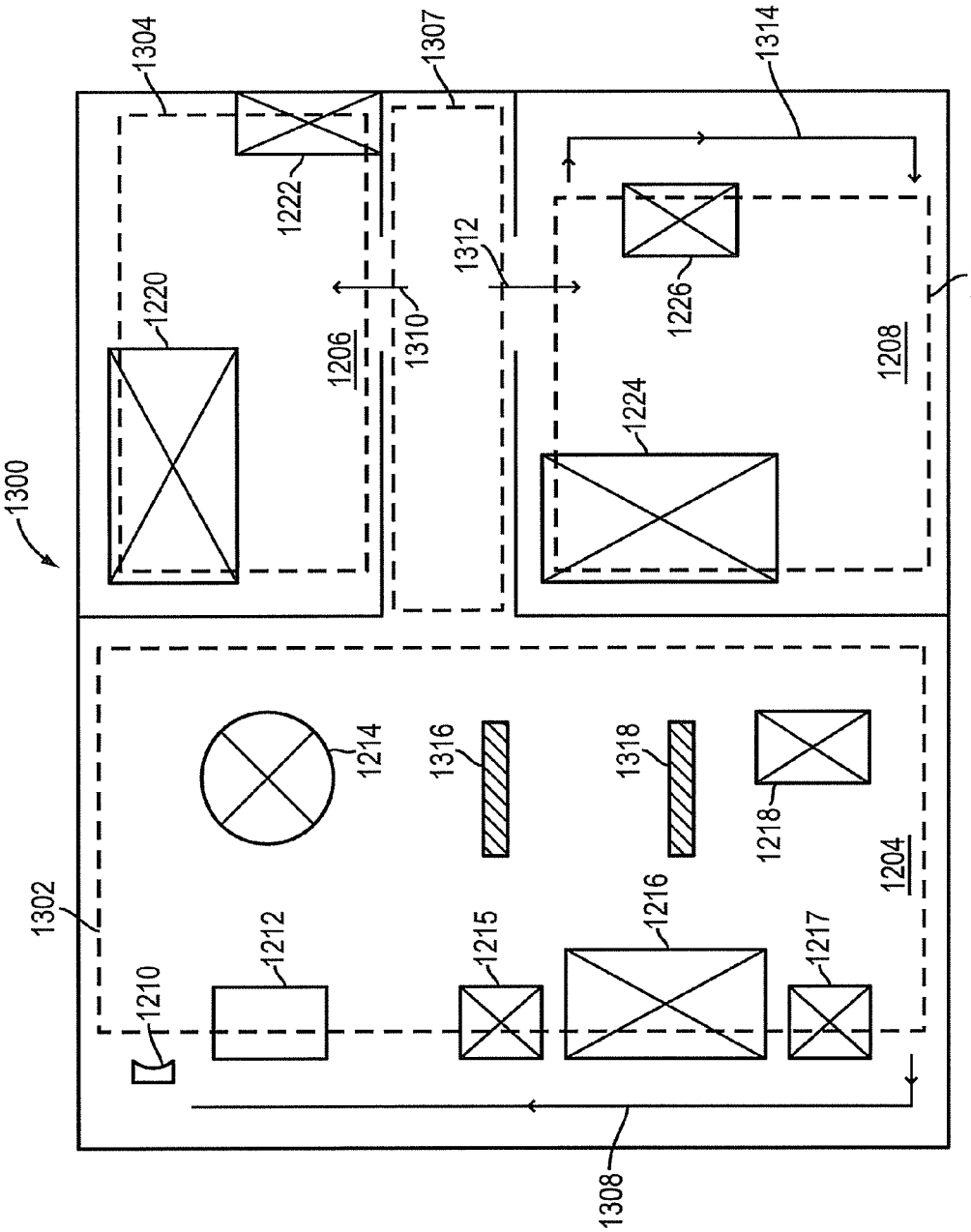
1300
1302
1304
1306
1307
1308
1310
1312
1314
1204
1206
1208
1210
1212
1214
1215
1216
1217
1218
1220
1222
1224
1226
1316
1318

FIG. 13

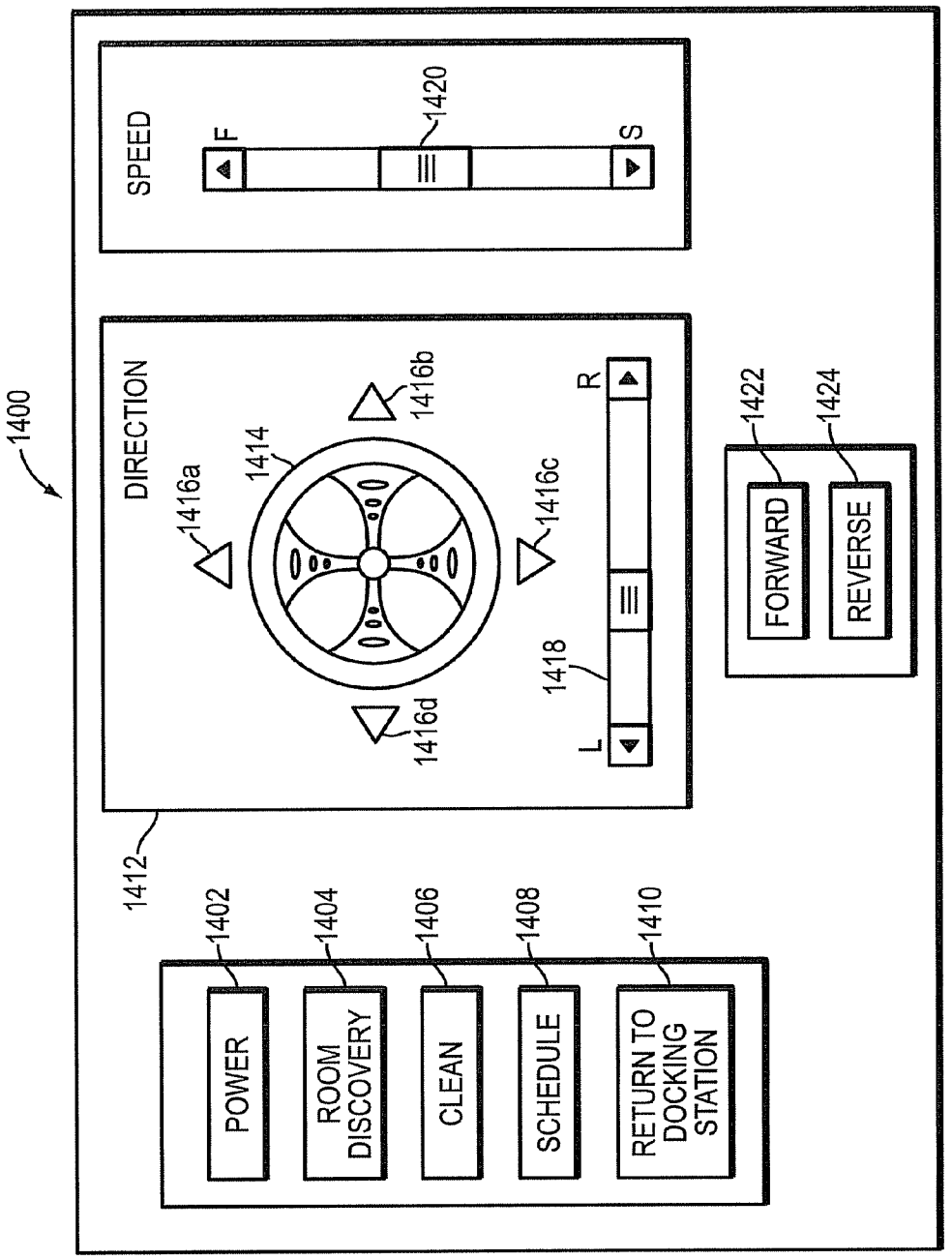
1400
SPEED
F
S
1420
DIRECTION
1414
1416a
1416b
1416c
1416d
L
R
1418
1412
1422
1424
FORWARD
REVERSE
1402
1404
1406
1408
1410
POWER
ROOM DISCOVERY
CLEAN
SCHEDULE
RETURN TO DOCKING STATION

FIG. 14

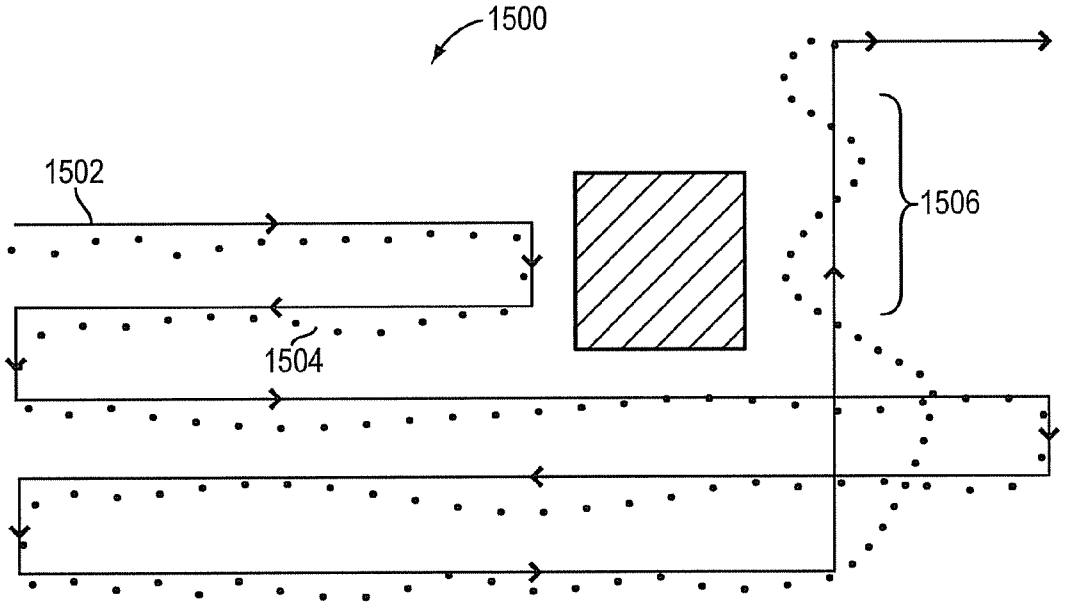

FIG. 15

USER-ASSISTED ROBOT NAVIGATION SYSTEM

BACKGROUND OF THE INVENTION

1. Field of the Invention

The present invention relates generally to robotic devices and, more specifically, to a system and method for assisting mobile robots in learning to navigate a space.

2. Background Information

Robotic devices are known for performing particular activities or functions. A well-known mobile robot is the Roomba® series of room cleaning robots from iRobot Corp. of Bedford, Mass. The Roomba® robots include preset navigation routines or behaviors that are utilized by the robots to move about a room during room cleaning operations. For example, as described in U.S. Pat. No. 7,188,000, such robots may use a combination of random motion and obstacle or wall following routines in order to traverse and thus clean an entire room. Despite extensive effort in the design of such autonomous navigation routines or behaviors, such robots still fail to efficiently and thoroughly perform their respective operations, such as room cleaning.

SUMMARY OF THE INVENTION

Briefly, the present invention relates to a system and method in which a user and a robot cooperate to establish a plan for use by the robot in navigating a space efficiently. The system includes a mobile robot, such as a room cleaning robot, and a workstation running a robot control utility that is operated by the user. The robot may include a locomotion unit, a cleaning module, a processor, a memory, a communication facility, such as a wireless network adapter card, and a tracking unit. The tracking unit detects the distance traveled and direction from a starting or home location and orientation. The robot may include other elements, such as one or more obstacle sensors or detectors. The robot also includes a navigation module, which may be implemented by the processor. The navigation module controls the movement of the robot based on a navigation plan received from the robot control utility residing at the workstation. The robot and the user cooperate in the creation of the navigation plan during a planning phase, and may make revisions to the plan as the robot performs its operation in the space.

In an embodiment, the robot traverses the space according to a discovery behavior, which may be part of the navigation module. As the robot encounters obstacles in the space, the robot may implement an obstacle avoidance algorithm, which also may be part of the navigation module. The tracking module also monitors the robot's movements as it traverses the space and records these movements in memory. After traversing the space, the robot may return to a starting or home location, and initiate a communication session with the workstation. During the course of the communication session, the robot reports to the workstation on where the robot encountered obstacles in the space. The robot control utility residing at the workstation may include a drawing unit. Based on the information received from the robot, the drawing unit generates or updates an electronic, e.g., digital, floor plan of the space that shows where the robot encountered obstacles. In an embodiment, the floor plan is drawn to scale and may be modified by the user to add obstacles or spaces that were missed or mis-located by the robot as it traversed the space.

The robot control utility may include one or more navigation tools that may be operated by the user in order to add navigation information to the floor plan. For example, to

assist the robot in navigating difficult areas of the space, such as narrow corridors or irregular shaped spaces, the user may specify one or more pathways to be followed or taken by the robot in at least a portion of the space. In an embodiment, the user may draw the pathways on the floor plan. The user may also specify one or more areas within the space that the robot is to avoid. The user may also specify one or more areas that the robot is to traverse multiple times. This navigation information may be embedded in the floor plan to produce a navigation-enhanced floor plan. The robot control utility residing at the workstation preferably transmits the navigation-enhanced floor plan to the robot. The robot stores the navigation-enhanced in its memory. The next time the robot traverses the space, it utilizes the information embedded in the navigation-enhanced floor plan to navigate through the space. For example, the robot follows the designated pathways set forth on the navigation-enhanced floor plan, and avoids the areas so designated.

In an embodiment, the robot further includes a position error correction engine that is configured to correct for position errors that may occur as the robot traverses the space. In particular, the robot has one or more sensors for detecting structures disposed below the surface over which the robot is traveling. For example, the robot may include a sensor that detects when the robot passes over a floor joist. The robot may include other sensors to detect other sub-surface structures, such as pipes, heating elements, wiring, reinforcing bar (rebar), etc. The position error correction error receives data generated by the sub-surface detector, and utilizes that information to recalibrate the tracking unit, thereby correcting for position errors, such as slippage errors, that may occur as the robot moves about the space.

BRIEF DESCRIPTION OF THE DRAWINGS

The invention description below refers to the accompanying drawings, of which:

FIG. **1** is a schematic top view of a space to be navigated by a robot;

FIG. **2** is a schematic block diagram of the robot of FIG. **1**;

FIG. **3** is a schematic functional diagram of a control engine of the robot and a management station;

FIGS. **4**A-B and **11** are flow diagrams of methods in accordance with embodiments of the present invention;

FIG. **5** is a schematic illustration of a user-created floor plan;

FIGS. **6**-**8** are schematic illustrations of paths followed by the robot during a discovery phase;

FIG. **9** is a side view of the robot traversing a floor;

FIG. **10** is a schematic illustration of the detection of a plurality of sub-floor features by the robot;

FIG. **12** is a schematic illustration of a revised floor plan as generated by the robot;

FIG. **13** is a schematic illustration of a navigation-enhanced floor plan;

FIG. **14** is a schematic illustration of a Graphical User Interface (GUI) for controlling the robot; and

FIG. **15** is a schematic illustration of a portion of a floor plan, a navigation and a track log.

DETAILED DESCRIPTION OF AN ILLUSTRATIVE EMBODIMENT

Environment

FIG. **1** is a top view of a space **100** to be navigated by a mobile robot **102**. The space **100**, which may correspond to a floor of a multistory house, includes a first room **104**, a second

room **106** and a third room **108**. A robot docking station **110** and a robot management station **112** are disposed within the first room **104**. The robot docking station **110** may be located adjacent to or otherwise in close proximity to the robot management station **112**. The robot **102** may interface, e.g., plug into, the docking station **110**, e.g., for recharging its battery. Within each room **104-108** are one or more obstacles. The obstacles may represent furniture or other objects disposed within the respective room. Specifically, within the first room **104** are obstacles **114-118**. It should be understood that the management station **112**, which may be disposed on a desk, and the docking station **110** may also constitute obstacles to the robot **102**. Within the second room **106** are obstacles **120** and **122**. Within the third room **108** are obstacles **124** and **126**.

As also illustrated in FIG. **1**, the robot management station **112** may include a central processing unit (CPU) **130**, a memory **132**, a display screen **134**, one or more input devices, such as keyboard **136** and a mouse **138**, and a data communication unit **140**, all of which may be interconnected by one or more busses, such as a system bus **142**. The robot management station **112** may also include or be coupled to a printer (not shown).

Suitable robot management stations may include workstations, desktop computers, laptop computers or other personal computers, such as the Inspiron series of desktop and laptop computers from Dell Inc. of Round Rock, Tex., or the Mac series of desktop and laptop computers from Apple, Inc. of Cupertino, Calif., among others, that have been specially configured to include a data communication unit for communicating with the robot **102** and/or its docking station **110**. The robot management station **112** may run an operating system, such as the Windows® series of operating systems from Microsoft Corp. of Redmond, Wash., or the Mac series of operating systems from Apple, Inc. Those skilled in the art will understand that other platforms may be used for the robot management station.

The data communication unit **140** of the management station **112** may be a wireless network interface card (NIC), an Ethernet-based NIC, a Bluetooth interface or an infra red (IR) interface, among other devices.

Suitable docking stations include the Home Base® series of docking stations from iRobot Corp. of Bedford, Mass., and the docking station described in U.S. Pat. Publication No. 2007/0267998, which is hereby incorporated by reference in its entirety.

It should be understood that space **100** is illustrative, and that the mobile robot **102** may be used with or in other environments or spaces, including a pool, an outdoor area or space, such as a yard, etc.

Mobile Robot

FIG. **2** is a schematic illustration of an embodiment of the mobile robot **102**. Robot **102** includes a chassis **202**, which supports a plurality of mechanical and electrical components. A shell (not shown) may fit over the chassis **202** and enclose the robot's mechanical and electrical components. In particular, the robot **102** may include obstacle sensors **204***a*, **204***b*, cliff sensors **206***a*, **206***b*, and wall following sensors **208***a*, **208***b*. The obstacle or bump sensors **204***a*, **204***b* may be IR break beam sensors that are activated by contact between the robot **102** and an obstacle, although other types of sensors may be used, including mechanical switches and capacitive sensors. Non-contact sensors, which allow the robot **102** to sense its proximity to objects without physically touching the object, such as capacitive sensors or a curtain of IR light, may also be used.

Those skilled in the art will understand that robot **102** may have additional or fewer sensors. For example, the robot may further include proximity sensors, a compass, a Global Positioning System (GPS) receiver, etc.

In an embodiment, the robot **102** further includes one or more sub-surface detection sensors, such as sensors **210***a* and **210***b*. In an embodiment, the two sub-surface detection sensors **210***a*, **210***b* are symmetrically aligned about a central, e.g., longitudinal, axis **209** of the robot **102**. That is, they are equidistant from the central axis. The sub-surface detection sensor **210** detects the presence of a feature or a building or construction component located underneath the floor over which the robot **102** is traveling. An exemplary sub-surface detection sensor is a stud finder that is oriented downward relative to the robot **102** in order to detect the presence of a sub-floor feature, such as a floor joist, below the robot **102**. Suitable sub-surface detection sensors include the StudSensor®, MultiScanner® and MetalliScanner® series of sensors from Zircon Corp. of Campbell, CA **95008**. It should be understood that the sub-surface detection sensor or sensors may be configured to detect the presence of floor joists, pipes, nails or other fasteners, wiring, reinforcing bars (rebar), duct work, support beams, or other building components. As described herein, using the sub-surface detection sensors **210**, the robot **102** constructs a map of the objects located below the surface over which it travels.

Robot **102** also includes one or more two drive wheels, such as drive wheels **212***a*, **212***b*, and may include a nose or steering wheel **214**. Each drive wheel **212***a*, **212***b* has a motor **216***a*, **216***b* coupled thereto for independently driving the respective drive wheel. Simultaneous operation of the two drive wheels **212***a*, **212***b* propels the robot **102** in a direction of travel illustrated by arrow **218**, i.e., forward. Each drive wheel further includes a respective encoder **220***a*, **220***b* that measures the rotation of its associated drive wheel. An exemplary encoder may be an optical shaft encoder. As described herein, using the data generated by the encoders, the robot **102** can calculate its position in the space **100** from a known starting point and orientation.

The robot **102** further includes a control engine **300**, a power supply **222**, which may be a rechargeable battery, and a communication facility **223**. The robot **102** may also include one or more user-selectable buttons **224***a*, **224***b*, **224***c*, which may be located on or be accessible through the shell. Button **224***a* may be a ROOM DISCOVERY button, button **224***b* may be a GO button, and button **224***c* may be a POWER button.

To the extent the robot **102** is a room cleaning robot, it may include a cleaning head **226**, which may contain a vacuum cleaner, brushes, sponges, mops, electrostatic cloths or some combination of cleaning elements. The cleaning head **226** may be powered by a motor **228**.

Suitable platforms for mobile robot **102** include the iRobot Create® series of programmable robots or the Roomba® and other series of cleaning robots from iRobot Corp., or the robots described in U.S. Pat. Nos. 7,188,000, 7,173,391, 6,594,844, each of which is hereby incorporated by reference in its entirety.

The robot's communication facility **223** may be a wireless network interface card (NIC), an Ethernet-based NIC, a Bluetooth interface or an IR interface, among other devices, and is specially configured to interface with the data communication unit **140** of the management station **112**.

It should be understood that the docking station **110** (FIG. **1**) may include a communication facility, and the workstation **112** may communicate with the robot **102** through the docking station **110** while the robot is connected thereto.

Robot Management Station

FIG. **3** is a schematic, functional illustration of the control engine **300** of the robot **102** and of the management station **112**. The robot control engine **300** may include a plurality of modules. In particular, the robot control engine **300** may include an obstacle detection engine **302**, a navigation module **304**, and a robot loader **306**. The loader **306** is configured to upload data to and download data from the management station **112**. The navigation module **304** may include a discovery engine **308**, an operating mode engine **310**, and a position error correction engine **312**. The robot control engine **300** also may include a robot memory **314**, a plurality of input/output (I/O) ports, such as I/O ports **316***a*, **316***b*, and one or more busses, such as system bus **318**, that interconnects engine **302**, module **304**, loader **306**, memory **314** and I/O ports **316**. The robot memory **314** may store one or more floor plans, such as floor plan **320**, as described herein.

It should be understood that the I/O ports **316** interface the robot control engine **300** to the sensors, motors, communication facility, and other components of the robot, such that the robot control engine can receive data from the sensors, control the motors, and communicate with the management station **112**, among other activities.

The discovery engine **308** may include one or more navigation routines or behaviors implemented by the robot **102**, such as obstacle/wall following behaviors, random motion behaviors and escape behaviors, such as those described in U.S. Pat. Nos. 7,173,391, which as described above is incorporated herein in its entirety.

The robot control engine **300** may comprise or include one or more microprocessors, central processing units (CPUs), or programmable logic devices, such as Field Programmable Gate Arrays (FPGAs), Complex Programmable Logic Devices (CPLDs), Application Specific Integrated Circuits (ASICs), etc. The microprocessor, CPU or programmable logic may be configured to execute computer code or instructions stored in a memory, such as memory **314**, in order to operate, as described herein.

The management station **112** may include a robot control utility **330** that, in turn, may include a drawing unit **332**, a route designation unit **334**, an area avoidance unit **336**, a robot control unit **338**, and a management loader **340** that is configured to upload data to and download data from the robot control engine **300**. The robot control utility **330** communicates with the management station memory **132**, which may store one or more floor plans, such as floor plan **342**.

The robot control utility **330** and its various units may each comprise registers and combinational logic configured and arranged to produce sequential logic circuits. In an embodiment, the robot control utility **330** and its various units are software modules or libraries containing program instructions pertaining to the methods described herein, that may be stored on computer readable media, such as magnetic, optical or magneto-optical media, and executable by one or more processing elements, such as CPU **130** (FIG. **1**). In an alternative embodiment, various combinations of software and hardware, including firmware, may be utilized.

Suitable drawing units for use with the present invention include the ConceptDraw PRO planning software from CS Odessa LLC of San Jose, Calif., the SmartDraw® planning software from SmartDraw.com of San Diego, Calif., and the SketchUp planning software from Google Inc. of Mountain View, Calif., among others.

It should be understood that the robot control engine **300** and/or the management station **112** may include more, fewer or other engines or modules.

Operation

Room Layout Discovery Phase

FIGS. **4**A-B is a flow diagram of a method according to an embodiment of the invention. A user may launch the robot control utility **330** residing at the robot management station **112**, as indicated at step **402**. The robot control utility **330** may display a Graphical User Interface (GUI) on screen **134**. The GUI may include a plurality of windows or panes, and a plurality of icons or command buttons organized, for example, into menu bars and toolbars for receiving input from a user. By selecting a particular command button, a user may access respective functionality of the robot control utility **330**. The user accesses the drawing unit **332** of the robot control utility **330**, e.g., by selecting with the mouse a drawing unit command button, and generates, e.g., "draws", an initial or preliminary floor plan of the space or environment to be navigated by the robot, as indicated at step **404**. For example, the user may measure the dimensions of the rooms of the space, and may input this information into the drawing unit **332**. The information may be entered textually or graphically, e.g., through one or more dialog boxes. The drawing unit **332** may be configured to present a two or three-dimensional floor plan drawing on the display screen **134** of the robot management station **112**. The displayed floor plan, moreover, may be modified by the user. The drawing unit **332** may include a plurality of floor plan templates that represent common layouts of homes, and the user may select the template that most closely matches the actual floor plan of his or her home. The user may then enter the dimensions, and modify the template as necessary to match the actual space. The drawing unit **332** may include a plurality of drawing-based tools, such as a line drawing tool, a selector tool, etc.

Next, the user may designate the location of one or more of the obstacles in the rooms, as indicated at step **406**. The user may actually measure the locations of these objects, e.g., relative to the walls or some other reference, or the user may draw or place them on the display in their general location. The user may also enter the starting location of the robot in the space, and the starting or initial direction to be followed by the robot upon leaving its starting location, as indicated at step **408**. In particular, the user may designate the location of the robot docking station **110**, and the initial direction of the robot **102** upon exiting the docking station. The drawing unit **332** also may include a palette from which the user may select commonly occurring obstacles, such as sofas, chairs, tables, bookcases, lamps, rugs, etc., and place them on the floor plan being created.

FIG. **5** is a schematic illustration of a floor plan **500** as generated by a user on the display **134** of the management station. Like the space **100** (FIG. **1**) upon which the floor plan **500** is based, the floor plan **500** created by the user includes a first room **504**, a second room **506** and a third room **508**. Within room **504** are obstacles **512**, **514**, **516**, **517** and **518**. Also within the first room **504** are a starting location **550** and a starting direction, as indicated by arrow **552**, of the robot **102**, as entered by the user. Within second room **506** are obstacles **520** and **522**. Within third room **508** is obstacle **524**. A comparison of the floor plan **500** with the actual physical space **100** (FIG. **1**) shows that the user missed some of the obstacles present in the space **100**, such as obstacle **115**, and mis-located some of the obstacles that were included in the floor plan **500**, such as obstacle **118**.

The user may zoom in and out of the floor plan **500**, e.g., by manipulating with the mouse **138**, a scale control. Furthermore the drawing unit **332** may be configured to overlay a scaled grid onto the floor plan to assist the user in drawing walls, obstacles, etc. The grid may be turned on or off by the

user. In addition, the user may "pull", e.g., with the mouse **138**, the corners or edges of rooms in order to alter their size.

The robot management station **112** preferably downloads the floor plan **500** created by the user to the robot **102**, as indicated at step **410**. In particular, the management loader **340** of the robot control utility **330** may utilize the communication channel or service established between the robot management station **112** and the robot **102**, e.g., a wireless data connection, as illustrated by arrow **350** (FIG. **3**) to transfer the user-created floor plan **500** to the robot **102**. The robot loader **306** is configured to receive and store the user-created floor plan **500** in the robot memory **314**.

The robot **102** may traverse the physical space **100** according to a discovery behavior in order to discover the size and shape of the space **100** as well as the actual location of obstacles within the space **100**, as indicated at step **412**. Specifically, the robot **102** traverses the space **100** in accordance with a discovery behavior. To initiate the robot's discovery behavior, the user may select the Room Discovery button **224***a* on the robot **102**. Alternatively, the robot control unit **338** may be configured to present a graphical robot command panel on the display **314**.

FIG. **14** is a schematic illustration of a robot Graphical User Interface (GUI) **1400** that may be presented on the display **134** of the management station **112**, and manipulated by the user, e.g., with the keyboard **136** and/or mouse **138**, in order to control the robot **102**. More specifically, the robot control unit **338** may be configured to present the GUI **1400**, and to receive corresponding user inputs. These user inputs may be converted into control signals that are transmitted to and executed by the robot **102**. The robot GUI **1400** may include a plurality of command buttons, such as a Power button **1402**, a Room Discovery button **1404**, a Go, e.g., Clean, button **1406**, a Schedule button **1408**, and a Return to Docking Station button **1410**. The GUI **1400** may also include a directional control area **1412** having a plurality of graphical widgets for controlling the motion of the robot **102** as it moves. For example, the directional control area **1412** may include a graphical steering wheel **1414** that may be operated by the user, e.g., with the mouse **138**, to change the direction of the robot **102**. The directional control area **1412** may also include a series of arrows **1416***a-d* and a horizontal scroll bar **1418** that similarly may be operated by the user, like the steering wheel **1414**, to change the direction of motion of the robot **102**. The robot GUI **1400** may also include a speed control **1420**, such as a vertical scroll bar, that can be manipulated to change the speed of the robot **102**. The robot GUI **1400** may also include a plurality of direction buttons, such as a forward button **1422** and a reverse button **1424**, that may be selected by the user to control whether the robot **102** moves in either a forward or a reverse direction.

In the discovery phase or mode, the robot **102** preferably starts from a known location, e.g., connected to the docking station **110**, and known direction or orientation as indicated by arrow **152** (FIG. **1**). Furthermore, as indicated above, the robot's starting point **550** and initial direction **552** may be entered in the user-created floor plan **500**.

The discovery engine **308** may implement a predetermined discovery routine or behavior that is carried out, e.g., followed, by the robot **102**. For example, the discovery engine **308** may control the movement of the robot **102**, e.g., the operation of the drive wheels **212***a*, **212***b*, such that the robot **102** follows a plurality of parallel, spaced track lines through the space **100** being discovered. The track lines may be parallel to one or more walls of the space **100** being discovered, and spaced apart by some fraction or multiple of the width of the robot. For example, each track line may be spaced one-half the width of the robot from the next track line. FIG. **6** is a schematic illustration of the path **600** followed by the robot **102** operating according to the discovery behavior. As shown, the path **600** includes a plurality of spaced track lines **602-608** extending between opposing walls **610** and **612**. As the robot **102** moves through the space **100**, the discovery engine **308** tracks the distance traveled by the robot **102** and direction, based on the data generated by the encoders **220***a*, **220***b*, and records this information in the robot memory **314**. When the robot **102** encounters an obstacle in the room, the distance to the obstacle from an initial location, e.g., a wall, an obstacle or some other starting point on the respective track line, is recorded. By traversing the space **100** in accordance with the discovery behavior, the robot **102** is able to determine the precise location of the walls and objects in the rooms **104**, **106** and **108** relative to each other as well as the size and shape of the space **100**.

As illustrated in FIG. **6**, a suitable discovery behavior may instruct the robot **102**, when it encounters an obstacle, other than a wall, such as obstacle **614**, to follow the periphery of the obstacle **614** until the robot returns back to the point **616** at which it first encountered the obstacle **614**. At this point, the robot **102** may pick up with the next track line **606**. The robot may also go back and traverse those portions of track lines **605** and **606** behind the obstacle **614** that it missed while following around the obstacle **614**. FIGS. **7** and **8** illustrate alternative behaviors. As shown, in FIG. **7**, when the robot encounters an obstacle **702** on a first track line **704**, it may follow the obstacle until it reaches the next track line **706**. The robot **102** may then continue its discovery behavior by following this new track line **706** in a direction opposite to the direction the robot was following when it encountered the obstacle **702**. Alternatively, as illustrated in FIG. **8**, the robot **102**, upon encountering an obstacle **802** while on a first track line **804**, may follow the obstacle **802** until it picks up, on the other side of the object, the same track line **804** that it was following before it encountered the obstacle **802**. At this point, the robot **102** may continue following the original track line **804** in the same direction until it encounters another obstacle or a wall.

Those skilled in the art will understand that the robot may implement other discovery behaviors or various combinations of these discovery behaviors.

When the robot encounters an obstacle, such as obstacle **116** (FIG. **1**), it may access the user-created floor plan **500** received from the management station **112**, and determine whether the obstacle it encountered matches any of the obstacles represented on the floor plan **500**, such as obstacle **516**, as indicated at step **414**. Suppose, for example, the user-created floor plan **500** indicates that the first room **104** is 20 feet wide. Suppose further that the robot's starting position, i.e., point **550**, is two feet away from the first wall. When the robot **102** encounters an obstacle after traveling 18 feet, the robot **102** accesses the user-created floor plan **500** from memory **314**, and determines that it has encountered the opposite wall as indicated on the user-created floor plan **500**. If the distance to the obstacle as measured by the robot **102** does not match the distance or dimension specified in the user-created floor plan **500**, the robot **102** preferably adds its understanding of the position of encountered objects, e.g., based on the distances measured the by the robot. As described herein, the location of objects as understood by the robot and added to the map is reviewed by the user who may accept, reject or modify, e.g., move, the locations of objects as determined by the robot **102**.

If the obstacle encountered by the robot **102** does not match any of the obstacles on the user-created floor plan **500**, such as

obstacle **115**, the robot **102** preferably enters the obstacle on the user-created floor plan **500** for subsequent review for acceptance or for modification by the user. More specifically, if the encountered obstacle matches the location of an obstacle represented on the floor plan within a predetermined error or tolerance limit, e.g., two feet, then the discovery engine **308** of the robot **102** concludes that the encountered obstacle is the obstacle identified on the floor plan. If the encountered obstacle does not match the location of an obstacle on the floor plan, the discovery engine **608** modifies the floor plan stored in the robot's memory **314** by adding the newly discovered obstacle. Accordingly, as the robot traverses the space, it updates the floor plan stored in its memory with the actual location of obstacles represented on the floor plan, and adds the location of newly discovered obstacles, thereby creating a revised floor plan, as indicated at step **416**. For example, while the user may have indicated that a room is 20 feet wide, the robot may have discovered that the room is, in fact, 20.5 feet wide. Similarly, the robot may have discovered one or more obstacles, such as obstacle **126**, that were not on the user-created floor plan **500** as received by the robot **102**.

A suitable procedure for calculating the distance traveled and direction followed is described in the article *Enabling Your Robot to Keep Track of its Position* from RidgeSoft LLC (©2005), which is hereby incorporated by reference in its entirety. Those skilled in the art will understand that other procedures may be used.

Position Error Correction

To prevent the occurrence of slippage errors from generating incorrect measurements of the locations of walls and obstacles as the robot **102** traverses the space **100**, the position error correction engine **312** corrects the data being generated by the encoders **220***a*, **220***b*. In an embodiment, the position error correction engine **312** may cooperate with the discovery engine **308**. The position error correction engine **312** receives data generated by the sub-surface detection sensors **210***a*, **210***b* (FIG. **2**). The position error correction engine **312** also received data generated by the wheel encoders **220***a*, **220***b*. FIG. **9** is a side view of the robot **102** as it moves across a floor **900**, which is shown in cross-section. The floor **900** may include a top layer **902**, such as wall-to-wall carpeting or hardwood flooring. Below the top layer **902** is a subfloor layer **904**, which may be plywood or boards. Supporting the subfloor layer **904** are a plurality of spaced floor joists **906***a-c*. The floor joists **906** may be attached to the subfloor layer **904** by fasteners **908**, e.g., nails.

The sub-surface detection sensors **210***a*, **210***b* may operate continuously as the robot **102** moves across the floor **900** during the discovery phase. When the sub-surface detection sensors **210***a*, **210***b* detect the presence of a feature below the floor **900**, such as the floor joist **906***c*, this data is captured by the position error correction engine **312**, which may also store this information in the robot memory **314**. For example, the location of a sub-floor feature may be added to the floor plan stored in the robot memory **314**. In another embodiment, information regarding sub-floor features is stored separately from the floor plan.

In addition to floor joists **906**, the sub-surface detection sensors **210***a*, **210***b* may detect the presence of other features located below the floor, such as a pipe **910**, which may be a heating pipe, a water supply pipe or a wastewater pipe. The sub-surface detection sensors **210***a*, **210***b* may also detect the presence of an electrical junction box **912**, and electrical wiring **914**, among other sub-floor features.

Many of these subfloor features will have or follow a repeating pattern throughout a given room or space. For example, the floor joists **906** all may be spaced 12 inches apart from each other. Pipes and heating or cooling air ducts follow a generally straight path below the floor. In any event, these sub-floor features are unlikely ever to change location unlike obstacles within the space **100**, such as furniture, which may be moved or even removed.

FIG. **10** is a graphical, schematic illustration of the room information **1000** generated by the position error correction engine **312** from the data produced by the sub-floor detection sensors **210***a*, **210***b* for a room, which may be stored at memory **314**. The room information **1000** includes a plurality of evenly spaced floor joists **1002***a-g*, an air handling duct **1004**, a pipe **1006**, three wire segments **1008***a-c* and a junction box **1010**.

The position error correction engine **312** uses the data produced by the sub-surface floor detection sensor **210**, and the stored location of subfloor features based on earlier or prior passes across the floor **900** (FIG. **9**) to recalibrate or correct the data generated by the encoders **220***a*, **220***b* due to slippage errors. For example, after passing over one floor joist, e.g., **906***b*, the position error correction engine **312** may expect to pass over the next floor joist, e.g., **906***c*, after traveling 12 inches, assuming the robot **102** is moving perpendicular to the orientation of the floor joists **906**. If instead, the next floor joist is not encountered until the robot travels 16 inches, the position error correction engine **312** may conclude, at least preliminarily, that a slippage error occurred. If the next one or more following floor joists are encountered 12 inches from the prior floor joist, then the position error correction engine **312** may conclude that a slippage error indeed occurred. In response the position error correction engine **312** may calculate the position error, e.g., four inches, and recalibrate the encoder data, e.g., by resetting or adjusting the encoder data based on the calculated position error.

FIG. **11** is a flow diagram of a method utilized by the position error correction engine **312** to correct for slippage or other errors. As the robot **102** travels across the floor of the space, it receives data from the sub-floor detection sensors **210***a*, **210***b* indicating the presence of a feature below the floor, as indicated at step **1102**. The position error correction engine **312** may compute the distance to the currently detected sub-floor feature utilizing data generated by the encoders **220***a*, **220***b*, as indicated at step **1104**. In particular, the position error correction engine **312** may compute the distance to the currently detected sub-floor feature from a selected start point. The selected start point may be the previously detected sub-floor feature or an obstacle or wall. The position error correction engine **312** may also determine the expected distance from the selected start point to the currently detected sub-floor feature, as indicated at step **1106**. For example, if the currently detected sub-floor feature is a floor joist and the position error correction engine **312** knows, based on its prior travel through the space, that the floor joists are spaced 12 inches apart, then it would expect the currently detected floor joist to be 12 inches from the previously detected floor joist. The determination of the expected distance to the currently detected sub-floor feature may be based on data collected by the robot during prior runs across the floor of the space, which may reveal where the currently detected sub-floor feature is located. As indicated above, this data may be stored by the position error correction engine **312**, e.g., in the robot memory **314**.

The position error correction engine **312** then may determine whether the measured distance matches the expected distance, as indicated at decision step **1108**. For example, the position error correction engine **312** may subtract the measured distance from the expected distance and determine

whether the result, e.g., a calculated position error, is below a threshold. If so, the position error correction engine may determine that the data generated by the encoders remains accurate as indicated by Yes arrow **1110** leading to step **1112**, and processing may loop back to step **1102**, as indicated by arrow **1114**. If the delta exceeds the threshold, the position error correction engine **312** may conclude that slippage of the wheels **212***a*, **212***b* or some other error has occurred, as indicated by No arrow **1116** leading to step **1118**. In this case, the position error correction engine **312** may adjust or correct the data produced by the wheel encoders **220***a*, **220***b* based on the computed delta, as indicated at step **1120**. Processing may then return to step **1102**, as indicated by arrow **1122**.

Based on the data generated by the presence of the sub-floor detections sensors **210***a*, **210***b*, the position error correction engine **312** can also determine its path relative to subsurface features. For example, if both sensors **210***a*, **210***b* detect the presence of floor joists **1002** at the same time, the position error correction engine **312** may conclude that it is traveling in a direction perpendicular to the orientation of the floor joists **1002**. If the floor joists **1002** are detected by one sensor **210***a*, before being detected by the other sensor **210***b*, the position error correction engine **312** may conclude that it is traveling at an angle relative to the joists **1002**. Utilizing the difference in time between the detection of a floor joist **1002** by each of the sensors **210***a*, **210***b* and the robot's speed (or the distance traveled between the time when the first sensor **210***a* detected the floor joist and the time the second sensor **210***b* detected the floor joist), the position error correction engine **312** may determine the angle at which the robot **102** is traveling relative to the floor joists. This information, moreover, may be used to correct or confirm the robot's direction of travel, e.g., with regard to the navigation plan. For example, it may be used to return the robot **102** to a path that is perpendicular to the floor joists **1002**.

It should be understood that the position error correction engine **312** may be configured alternatively or additionally to apply one or more geometric, including trigonometry, functions if the robot is encountering the floor joists, or other sub-floor features, at an angle, rather than straight on.

As described herein, by detecting a sub-floor feature, the robot **102** can confirm its actual location within the room, and recalibrate the data produced by the wheel encoders, as necessary. By virtue of the sub-surface detection sensors **210***a*, **210***b* and the position error correction engine **312**, the robot **102** is able to generate accurate information regarding the position of walls and obstacles in the space, notwithstanding the occasional slippage of the wheels or other errors.

It should be understood that the robot's accurate self-determination of its location in the space does not require the installation of other components, such as triangulation data transmitters, in the room. It also does not require the placement of markers either on the floor, on the ceiling or in other locations in the space.

After traversing the space **100** according to the discovery behavior, the robot may return to its starting location, i.e., the docking station **110**. The user then may initiate a communication session between the robot and the robot control utility. The revised floor plan generated by the robot, which includes accurate location information of the walls and obstacles of the space, is uploaded from the robot **102** to the management station **112**, as indicated at step **418** (FIG. **4**A). The management loader **340** may replace the previous version of the floor plan with the revised floor plan received from the robot **102**, and store this revised floor plan in the management memory **132**. The drawing unit **332** preferably accesses the revised floor plan from the management memory **132**, and presents it to the user, e.g., it may be displayed and/or printed.

In an embodiment, any changes or modifications to the floor plan as suggested by the robot **102**, e.g., following its discovery operation, are presented to the user, e.g., on the display **134**. The user may then accept, reject or modify the changes being proposed by the robot. That is, the management loader **340** may be configured to request user authorization before accepting updates to the floor plan from the robot **102**. The management loader **340** also may be configured to store each revision to the floor plan. A user may thus go back and review prior revisions to a floor plan.

It may be that the robot **102**, during the discovery phase, failed to locate one or more obstacles in the space **100**. It also may be that the robot erroneously determined the location or shape of one or more obstacles. If so, such errors would appear on the revised floor plan. The user may update or correct the revised floor plan through the drawing unit **332** of the robot control utility, as indicated at step **420**. In an embodiment, the robot **102** is configured not to delete any information on the floor plan. Instead, changes to the floor plan proposed or suggested by the robot **102** as a result of the discovery phase are added to the floor plan and must be confirmed by the user to be made permanent. For example, the proposals or suggestions from the robot **102** may be shaded or in a selected color to distinguish them from information entered by the user. The user may then accept, reject or modify the robot's proposals or suggested changes to the floor plan. In other words, the user must always confirm any changes from the robot before those changes are accepted to the floor plan.

In an embodiment, the drawing unit **332** may present two views, e.g., floor plans, of the space **100**, to the user on display **134**. The first view may correspond to the user, while the second view may correspond to the robot **102**. These two views, moreover, may be overlaid on each other, thereby allowing the user to better understand how the robot **102** views the space being navigated.

As shown, the user operating through the management station **112** and the robot cooperate to generate a floor plan that accurately represents the space **100** to be navigated by the robot **102**.

It should be understood that in other embodiments, the user may not create an initial floor plan, or may not mark the location of any obstacles in the floor plan. In this embodiment, the robot **102** discovers the dimensions of the rooms of the space **100**, and the location of all of the obstacles within the rooms.

Navigation Planning Phase

FIG. **12** is a revised floor plan **1200** as generated by the robot **102** during the discovery phase. Floor plan **1200** may include corrections or additions from the user. Like the space **100** (FIG. **1**), the revised floor plan **1200** includes a first room **1204**, a second room **1206** and a third room **1208**. Within the first room **1204** are obstacles **1210**, **1212**, and **1214-1218**. As indicated above, these obstacles correspond to the robot docking station **110**, the robot management station **112** and various pieces of furniture. Within the second room **106** are obstacles **1220** and **1222**. Within the third room **1208** are obstacles **1224** and **1226**. As shown, the revised floor plan **1200** includes the obstacles specified in the user-created floor plan **500** (FIG. **5**), although some have been moved to their correct position within the space as reflected on the revised floor plan **1200**, as determined by the robot **102**. In addition, new obstacles discovered by the robot **102**, which were not present on the user-created floor plan **500** have been added to the revised floor plan **1200**.

Armed with an accurate depiction of the space, i.e., revised floor plan **1200**, including the precise location of walls and obstacles, the user may direct how the robot **102** navigates the space **100** when it subsequent operates within the space, e.g., during room cleaning operations. The user may access the route designation unit **334** of the robot control utility **330** residing at the management station **112**. By operating the route designation unit **332**, the user can specify how the robot **102** will navigate the space **100**.

The route designation unit **334** may call-up the revised floor plan **1200** from the management memory **132**, and present the revised floor plan **1200** on the display **134**. In an embodiment, the user may designate one or more areas of the space that the robot is to traverse according to one or more preset navigation routines, such as a random motion behavior, a spot cleaning behavior, a combination of random motion behavior and obstacle/wall following behavior, etc., as indicated at step **422** (FIG. **4**B). A suitable preset navigation routine is the obstacle following mode and random bounce mode described in U.S. Pat. No. 7,173,391. In particular, the user may select, e.g., using the mouse, one or more areas of the revised floor plan **122**, such as a generally open area, and designate these areas as "standard navigation areas". For example, the user may draw a boundary around one or more areas of the space that are to be navigated by the robot **102** using a preset navigation routine or behavior. The route designation unit **334** may include an area designation tool (not shown).

FIG. **13** is a schematic illustration of a floor plan **1300** that includes user-entered navigation data or aids. The navigation-enhanced floor plan **1300** may be based on the revised floor plan **1200** and thus include the rooms **1204-1206** and obstacles **1210**, **1212**, **1214-1218**, **1220**, **1222**, **1224** and **1226** from the revised floor plan **1200**. Floor plan **1300** includes a plurality of areas designated by the user in which the robot **102** is to use a preset navigation routine or behavior. In particular, a first standard navigation area **1302**, as specified by the user, is located in the first room **1204**. A second standard navigation area **1304** is located in the second room **1206**, a third standard navigation area **1306** is located in the third room **1208**, and a fourth standard navigation area **1307** is located between the second and third rooms.

During operation of the robot **102**, as described herein, the robot utilizes the preset navigation routine or behavior when traversing any one of the standard navigation areas **1302**, **1304** and **1306** specified by the user on the navigation-enhanced floor plan **1300**. For other areas within the space **100**, the user may specify one or more pathways that the robot **102** is to follow when it is in these non-standard areas, as indicated at step **424**. In particular, the route designation unit **334** may include a route placement tool. The user may select the route placement tool, e.g., with the mouse, and use it to "draw" one or more pathways on the navigation-enhanced floor plan **1300**. A user may want to draw such a path through a narrow or confined space where the robot **102** might otherwise become stuck, such as between an obstacle and a wall or between two obstacles. As used herein, the term "narrow" or "confined" is relative to the size of the robot **102**. An exemplary narrow or confined space may be a space that is narrower than twice the width of the robot. Another exemplary non-standard area is an area with limited accessibility, such as behind a wide obstacle, such as a couch, that might otherwise be missed by the robot when using its preset navigation routine or behavior.

As illustrated in the navigation-enhanced floor plan **1300**, the user has placed a first defined pathway **1308** in the first room **1204**. The first defined pathway **1308** is disposed between obstacles **1212** and **1215-1217** and the opposing wall. A second defined pathway **1310** corresponds to an entrance into the second room **1206**, e.g., a doorway. A third defined pathway **1312** corresponds to an entrance into the third room **1208**. A fourth defined pathway **1314** is defined between obstacle **1226** and the opposing wall.

It should be understood that the standard areas **1302**, **1304** and **1306**, and the defined pathways **1308**, **1310**, **1312** and **1314** are for illustration purposes only, and that a user may specify other standard areas or pathways on the navigation-enhanced floor plan **1300**. For example, the user may choose to designate how the robot traverses the entire space **100** by using a plurality of defined pathways.

In an embodiment, the route designation unit **334** may be further configured to propose one or more pathways based on the configuration of the space **100**. For example, the route designator may locate the largest open space and have the robot **102** follow a series of track lines within that space.

In addition to specifying standard navigation areas and defining pathways, the user also may designate one or more areas that the robot **102** is to avoid, as indicated at step **426**. For example, a room may include a rug that has fringe along two opposing edges. By observing the robot **102** as it traverses the room, e.g., during the discovery phase, the user may notice that the robot occasionally gets caught or stuck on the fringe. To address this issue, the user may designate the location of the rug's fringe as an area that the robot **102** is to avoid.

In particular, the user may access the area avoidance unit **336** of the robot control utility **330** residing at the management station **112**. By operating the area avoidance unit **336**, the user can specify one or more areas that the robot **102** is to avoid as it traverses the space **100** performing its operation. The area avoidance unit **336** may cooperate with the route designation unit **334** in adding additional navigation data to the navigation-enhanced floor plan **1300**. The area avoidance unit **336** may include an area avoidance drawing tool. The user may select the area avoidance drawing tool, e.g., with the mouse, and use it to designate one or more areas on the navigation-enhanced floor plan **1300** that the robot **102** is to avoid. The area avoidance drawing tool may be configured and selectable by the user to draw boxes, circles, ellipses or other shapes on the navigation-enhanced floor plan **1300**. These shapes define the boundaries of the areas to be avoided by the robot **102**. As shown in FIG. **13**, the user has drawn a first avoidance area **1316** and a second avoidance area **1318** both of which are located in the first room **1204**.

It should be understood that a single tool may be used to draw boundaries and that, once drawn, the user may select the area, e.g., with the mouse, and designate a property of the area, e.g., utilize preset navigation routine or behavior within area, or avoid area.

It should also be understood that the user may mark one or more areas on the navigation-enhanced floor plan that require extra cleaning by the robot **102**. The user may embed navigation data that directs the robot **102** to use a particular behavior, e.g., a spiral motion behavior or a repeating behavior, within such areas. It should be further understood that the user may mark one or more areas on the navigation-enhanced floor plan that are to be cleaned with an accessory to the robot **102**. For example, if the robot **102** cannot fit under a sofa, the user may designate that area to be cleaner by an accessory that extends from the robot. When the robot **102** reaches such an area, it utilizes the accessory.

The navigation-enhanced floor plan **1300** may be downloaded from the management station **112** to the robot **102** and stored in the robot's memory **314**, as indicated at step **428**.

Robot Operational Phase

The user may direct the robot **102** to start its operation, e.g., room cleaning, within the space **100**, as indicated at step **430**. For example, the user may select the GO button **224***b* (FIG. **2**) located on the robot **102**. Alternatively, the user may select, e.g., with the mouse **138**, the CLEAN button **1406** (FIG. **14**) of the graphical robot command panel **1400** presented on the display screen **134** of the management station **112**. In an embodiment, the robot **102** may be scheduled to perform its operation, e.g., room cleaning, on a periodic basis according to some schedule, e.g., every Monday and Thursday starting at 10:00 am. For example, the user may select the schedule button **1408** and enter a schedule in a dialog box and/or an electric calendar (not shown).

In response to being directed to operate, the operating mode engine **310** of the navigation module **304** of the robot **102** accesses the navigation-enhanced floor plan **1300** from memory **314**. The operating mode engine **310** directs the motion of the robot **102**, e.g., by commanding wheel motors **216***a*, **216***b*, in accordance with the navigation data embedded in the navigation-enhanced floor plan **1300**. For example, while the robot is within any of standard areas **1302**, **1304**, **1306** or **1307**, the operating mode engine **310** uses a preset navigation routine or behavior, as indicated at step **432**. The operating mode engine **310** also directs the robot **102** to follow the specific pathways **1308**, **1310**, **1312**, and **1314** embedded on the navigation-enhanced floor plan **1300**, as indicated at step **434**. The operating mode engine also controls the wheel motors to prevent the robot from entering the avoidance areas **1316** and **1318**, as indicated at step **436**.

The robot **102** preferably starts from a known location, e.g., starting point **550** (FIG. **5**), and known direction or orientation, e.g., arrow **552**, within the space **100**.

As the robot **102** traverses the space **100** during operation, e.g., room cleaning, the position error correction engine **312** monitors data generated from the sub-surface detection sensor **210** and recalibrates data from encoders **220***a*, **220***b*, as described above in connection with FIG. **11**, as indicated at step **438**. By recalibrating the encoders as it traverses the space **100**, the robot **102** is able to accurately determine its position within the space **100**, and thus carry out the navigation plan established by the user.

The operating mode engine **310** preferably records the robot's movement through the space during each session, e.g., each cleaning. That is, as the robot **102** follows the current navigation plan, the operating mode engine **310** tracks the data from the wheel encoders, as corrected by the position error correction engine **312**, and may store this data in the robot memory **314**. When the robot **102** returns to the docking station **110**, the robot loader **306** may upload this information to the management loader **340** of the robot control utility at the management station **112**, which in turn may store it in management memory **132**. The drawing unit **332** may access this information, which may be in the form of "bread crumb" tracks or trails, and present it to the user on the display **134**. These bread crumb tracks may be displayed in a similar manner as that shown in FIGS. **6-8**. A suitable technique for presenting such track logs is described in U.S. Pat. No. 6,845,318, which is hereby incorporated by reference in its entirety.

The drawing unit **332** may overlay these bread crumb tracks onto the floor plan so that the user may evaluate how well the robot **102** was able to follow the navigation plan, and how well it was able to perform its function, e.g., room cleaning. The bread crumb tracks may be animated, e.g., blinking, to better distinguish them. If the robot **102** successfully implemented the navigation plan, then the bread crumb tracks will appear on top of the specified pathways of the navigation plan. If the robot **102** encountered difficulties following the navigation plan, this may be revealed by the bread crumb tracks being spaced or different from the corresponding specified pathways. In the response, the user may make modifications to the navigation plan. That is, the user may make modifications to those portions of the navigation with which the robot experienced difficulty. In an embodiment, the user may "grab", e.g., with the mouse **138**, the navigation pathways and move, resize or otherwise alter them to change the cleaning strategy. The user may then save these changes in a revised navigation plan that may be downloaded to the robot **102**, and utilized during the next cleaning session. In this way, the user and robot can refine the navigation plan over time to better achieve the robot's objectives, e.g., room cleaning.

FIG. **15** is a schematic illustration of a portion of a floor plan **1500** having a navigation plan included thereon, as indicated by pathway **1502**. Also displayed on the floor plan **1500** is a bread crumb track log **1504** that represents the path actually followed by the robot **102** in implementing the navigation plan represented by pathway **1502**. As shown, the track log **1504** diverges significantly from a vertical portion **1506** of the pathway **1502**. In response, the user may modify the navigation plan, e.g., by not requiring the robot **102** to make such a sharp left turn at the vertical portion **1506** of the pathway **1502**.

In an embodiment, the user may direct the motion of the robot **102** in real-time using the robot GUI **1400**, as a remote control. For example, the user may operate, e.g., with the keyboard **136** or mouse **138**, the steering wheel **1414**, the arrows **1416***a-d*, and/or scroll bar **1418**. The robot control unit **338** may be configured with a remote control feature for controlling the motion of the robot from the management station **112**. Alternatively, a hand-held remote control unit (not shown) may be operated by the user to direct the motion of the robot **102**.

If the robot **102** becomes overly disturbed, the operating mode engine **310** may be configured to return to the docking station **110**. That is, if the robot **102** gets off-track from or otherwise loses the navigation plan, e.g., through excessive wheel slippage on rug fringe, and is unable to return to or otherwise resume the navigation plan, it may return to the docking station **110**, and provide the bread crumb track log to the management station **112** for review by the user. The user may respond by modifying the navigation in an effort to avoid the problem that triggered the condition. Alternatively or additionally, if the user notices that the robot **102** appears to have gone off the navigation plan, the user may select the Return to Docking Station button **1410**. In response, the robot **102** may stop its cleaning operation, and return to the docking station **110**. Again, the user may then evaluate the robot's "bread crumb" track log in an effort to determine how the robot became stuck, and the user may change the navigation plan for the space **100** in an effort to avoid that problem in the future.

If the robot **102** encounters a newly discovery obstacle or object while performing its operation, e.g., room cleaning, the navigation module **304** may be configured to implement the discovery engine **308** in order to determine the location of this new obstacle, and store its location in the robot memory **314**, e.g., on the floor plan. This information may then be uploaded to the management station **112** when the robot **102** returns to the docking station **110**. The robot control utility **332** may be configured to signal an alert, such as a visual or aural alert to the user, indicating that a new obstacle was discovered by the robot **102**. The information concerning the new obstacle may be presented to the user who may accept, reject or modify this information, as discussed above.

It should be further understood that the robot **102** may be configured to access a centralized vacuum system to unload the debris collected by the robot **102** during its cleaning activities. That is, the robot **102** may have a sensor to determine when a debris container is full or nearly full. In response, the robot **102** may access the centralized vacuum system or some other device and offload the debris collected by the robot **102**. The robot **102** may then return to the point in the space **100** when this "full load" condition was encountered, and resume its cleaning operations.

In an embodiment, the robot **102** may include an environmental or other sensor that triggers the robot to begin its operation, e.g., cleaning. For example, an industrial cleaning robot may include a sensor for detecting the presence of fuel vapors in the air, thereby indicating a possible fuel spill by a machine or vehicle. In response, the robot may begin its cleaning operation. Furthermore, the robot **102** may utilize the environmental sensor to locate the source of the fuel spill, and begin its cleaning operation at that location. For example, the robot may be configured to follow a path of increasing fuel vapor concentration as detected by the environmental sensor.

The foregoing description has been directed to specific embodiments of this invention. It will be apparent, however, that other variations and modifications may be made to the described embodiments, with the attainments of some or all of their advantages. For example, the present invention may be used with other robotic devices besides room cleaning robots, such as painting robots, pool cleaning robots, lawn mower robots (which detect underground features), etc. Therefore, it is the object of the appended claims to cover all such variations and modifications as come within the true spirit and scope of the invention.

What is claimed is:

1. A mobile robot comprising:

a controllable drive element operable to move the robot over a surface;

at least one sub-surface detector configured to sense the presence of a feature located below the surface over which the robot moves;

a memory coupled to the at least one sub-surface detector for storing data generated by the at least one sub-surface detector; and

a discovery engine coupled to the controllable drive element and to the memory, the discovery engine configured to

operate the controllable drive element to move the robot autonomously according to a predetermined discovery routine within a space,

determine a location of at least one obstacle encountered by the robot as the robot moves within the space according to the predetermined discovery routine, the at least one obstacle impeding the movement of the robot within the space,

store the determined location of the at least one obstacle in the memory, and

provide the determined location of the at least one obstacle to a management station.

2. The mobile robot of claim **1** further comprising:

one or more encoders coupled to the controllable drive element, the one or more encoders configured to generate data corresponding to a distance traveled by the robot; and

a position error correction engine coupled to the one or more encoders and the memory, the position error correction engine configured to utilize the data generated by the at least one sub-surface detector to produce a position error.

3. The mobile robot of claim **2** further comprising:

a navigation module coupled to the controllable drive element, the navigation module operating the controllable drive element to direct the robot to follow a navigation plan through the space, wherein

the navigation plan includes the location of the at least one obstacle as determined by the discovery engine.

4. The mobile robot of claim **3** wherein the navigation module is coupled to the position error correction engine, and is configured to utilize the position error in order to follow the navigation plan.

5. The mobile robot of claim **1** wherein the at least one sub-surface detector is configured to sense the presence of one or more of:

a floor joist,

a reinforcing bar (rebar),

a pipe,

an electrical wire, and

a duct work.

6. The mobile robot of claim **1** wherein the controllable drive element includes two drive wheels and at least one motor operatively coupled to the two drive wheels.

7. The mobile robot of claim **2** the position error produced by the position error correction engine corresponds to slippage of one or more of the two drive wheels.

8. The mobile robot of claim **1** further comprising:

a longitudinal axis, and

two sub-surface detectors that are symmetrically aligned about the longitudinal axis of the robot.

9. The mobile robot of claim **2** wherein the position error detection engine is configured to

determine distances between sub-surface features as the robot moves over the surface, and

compare a currently determined distance between two sub-surface features with a previously determined distance between the two sub-surface features to produce the position error.

10. The mobile robot of claim **1** further comprising a cleaning element for cleaning the surface over which the robot moves.

11. A method for programming a mobile robot to navigate a space, the method comprising:

producing a floor plan of the space to be navigated by the robot;

receiving one or more proposed modifications to the floor plan from the robot, the one or more proposed modifications corresponding to a location of at least one obstacle encountered by the robot as it moved about the space during a discovery phase, the at least one obstacle impeding movement of the robot in the space;

accepting or rejecting the one or more proposed modifications to the floor plan from the robot;

generating, on a processor, a navigation plan for the space; and

providing the navigation plan to the robot for use by the robot in navigating the space.

12. The method of claim **11** wherein the navigation plan includes at least one user-specified pathway through a portion of the space to be navigated by the robot.

13. The method of claim **11** wherein the navigation plan identifies at least one user-specified area in the space that is to be avoided by the robot.

14. The method of claim **11** wherein

the floor plan includes at least one obstacle in the space, and

the one or more proposed modifications includes a change in the location of the at least one obstacle.

15. The method of claim **11** further comprising receiving a report from the robot that describes how the robot navigated through the space.

16. The method of claim **15** further comprising revising the navigation plan by a user based on the report received from the robot.

17. The method of claim **14** wherein the floor plan is a two-dimensional, user-created graphical representation of the space to be navigated.

18. The method of claim **11** wherein the navigation plan identifies at least one user-specified area in the space in which the robot is to use a preset navigation routine.

19. The method of claim **11** wherein the navigation plan is included in the floor plan.

20. The method of claim **11** wherein the generating the navigation plan comprises drawing navigation data onto the floor plan.

21. A mobile robot comprising:

a controllable drive element operable to move the robot over a surface;

a memory;

a discovery engine coupled to the controllable drive element and to the memory, the discovery engine configured to

operate the controllable drive element to move the robot according to a predetermined discovery routine within a space,

determine a location of at least one object that is encountered by the robot as the robot moves within the space, and that impedes movement of the robot,

store the determined location of the at least one movement impeding object in the memory, and

provide the determined location of the at least one movement impeding object to a management station; and

a navigation module coupled to the controllable drive element, the navigation module operating the controllable drive element to direct the robot to follow a navigation plan through the space, wherein

the navigation plan accounts for the location of the at least one movement impeding obstacle as determined by the discovery engine.

22. The mobile robot of claim **21** further comprising:

at least one sub-surface detector configured to sense the presence of a feature located below the surface over which the robot moves;

one or more encoders coupled to the controllable drive element, the one or more encoders configured to generate data corresponding to a distance traveled by the robot; and

a position error correction engine coupled to the one or more encoders and the memory, the position error correction engine configured to utilize the data generated by the at least one sub-surface detector to produce a position error.

23. The mobile robot of claim **22** wherein navigation module is coupled to the position error correction engine, and is configured to utilize the position error in order to follow the navigation plan.

24. The mobile robot of claim **22** wherein the position error detection engine is configured to

determine distances between sub-surface features as the robot moves over the surface, and

compare a currently determined distance between two sub-surface features with a previously determined distance between the two sub-surface features to produce the position error.

25. The mobile robot of claim **21** further comprising:

a cleaning element for cleaning the surface over which the robot moves.

26. A method for programming a mobile robot to navigate a space, the method comprising:

traversing, by the mobile robot, at least a portion of the space;

determining, by the mobile robot, a location of at least one obstacle in the space as the mobile robot traverses the at least a portion of the space, the at least one obstacle impeding movement of the mobile robot in the at least a portion of the space;

storing the determined location of the at least one obstacle in a memory of the mobile robot;

providing the determined location of the at least one obstacle from the mobile robot to a management station;

generating, at the management station, a navigation plan of the space, the navigation plan accounting for the determined location of the at least one obstacle;

providing the navigation plan from the management station to the mobile robot.

27. The method of claim **26** further comprising:

utilizing, by the mobile robot, a predetermined discovery routine to traverse the at least a portion of the space.

28. The method of claim **26** wherein the navigation plan includes at least one selected from the group consisting of:

a route for navigating around the determined location of the at least one obstacle when navigating within the space,

one or more pathways to be followed by the mobile robot when navigating within the space,

one or more first areas to be avoided by the mobile robot when navigating within the space, and

one or more second areas to be traversed according to a preset navigation routine.

29. The method of claim **28** further comprising:

utilizing, by the mobile robot, the navigation plan when navigating within the space.

30. The method of claim **26** further comprising:

performing a cleaning operation, by the mobile robot, in the space.

31. The method of claim **30** wherein the cleaning operating includes vacuuming the space.

* * * * *