US 20110139727A1

(19) United States

(12) Patent Application Publication

HUI

(10) Pub. No.: US 2011/0139727 A1

(43) Pub. Date: Jun. 16, 2011

(54) POOL CLEANING VEHICLE HAVING STRUCTURE FOR CLEANING AND SANITIZING POOL WATER

(76) Inventor: **Wing-kin HUI**, Hong-Kong (HK)

(21) Appl. No.: **12/272,908**

(22) Filed: **Nov. 18, 2008**

Publication Classification

(51) **Int. Cl.**
E04H 4/16 (2006.01)
C02F 1/68 (2006.01)

(52) **U.S. Cl.** **210/749**; 210/167.11

(57) **ABSTRACT**

Disclosed herein is an improved pool cleaning vehicle with the ability to clean and sanitize pool water. The vehicle includes a housing having an interior. The vehicle includes a chemical dispenser member connected to the housing. The chemical dispenser member has a hollow interior suitable for storing chemicals for sanitizing pool water. The chemical dispenser having an inlet for allowing pool water to contact the chemical dispenser member. The chemical dispenser member having a dissolvable seal. And, upon continued contact with water, the seal dissolving. The chemical dispenser member having an outlet facilitating communication between the chemical dispenser member and the pool water.

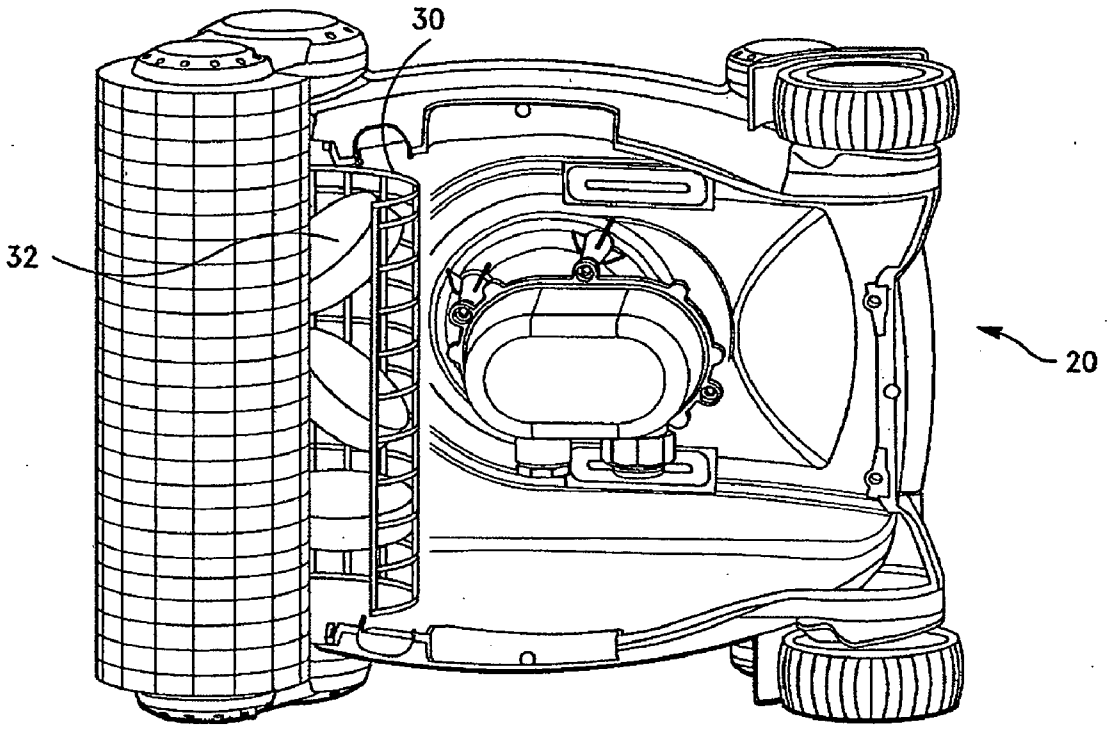

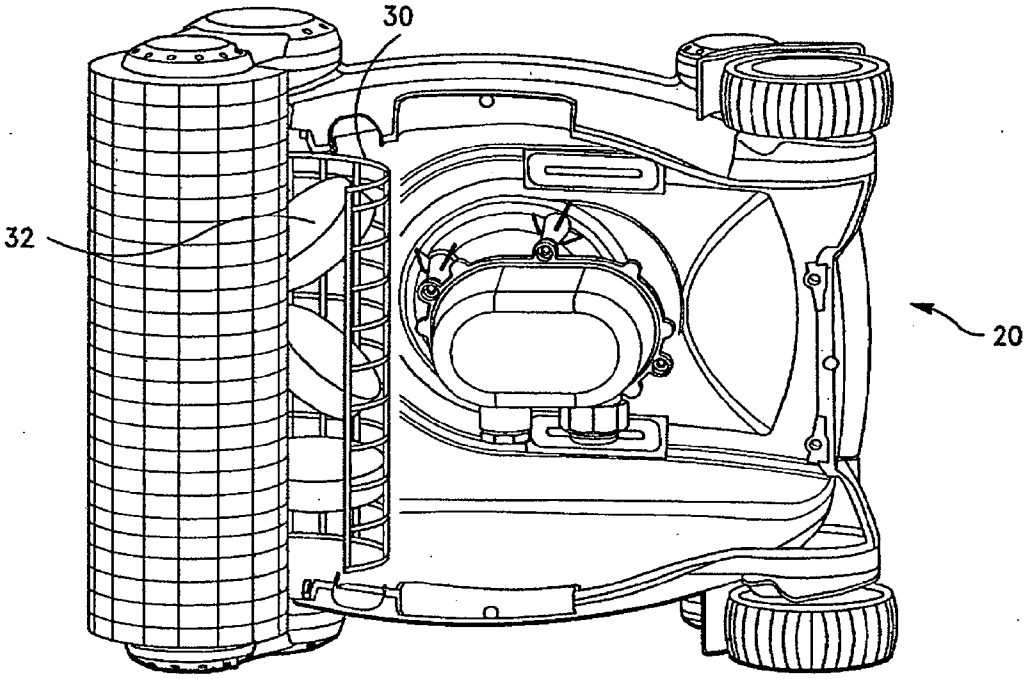

FIG. 1

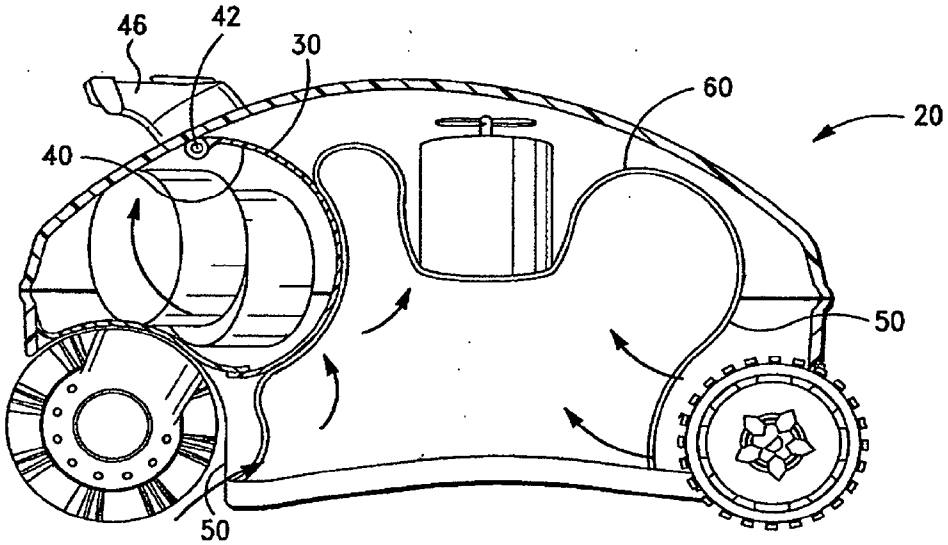

FIG. 2

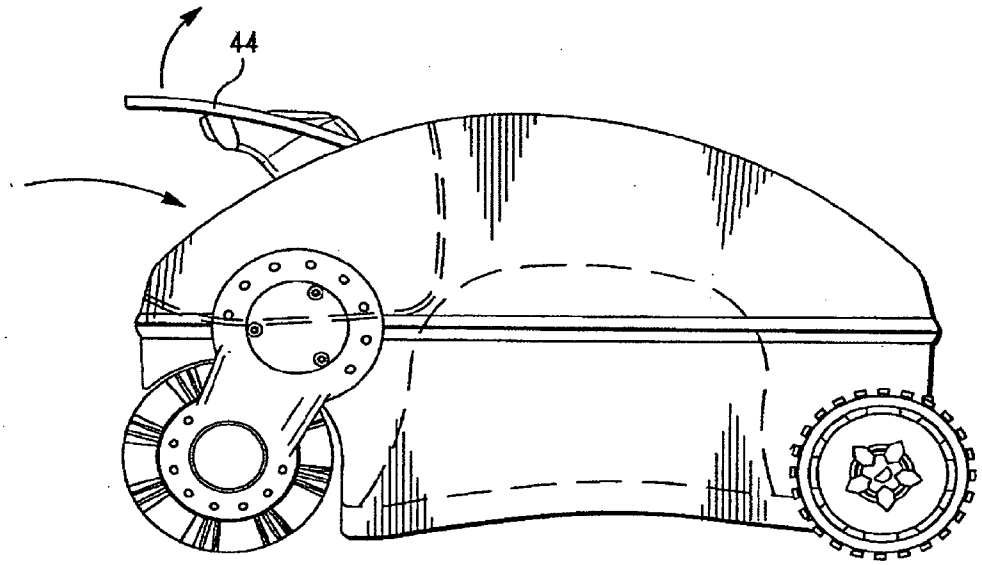

FIG. 3

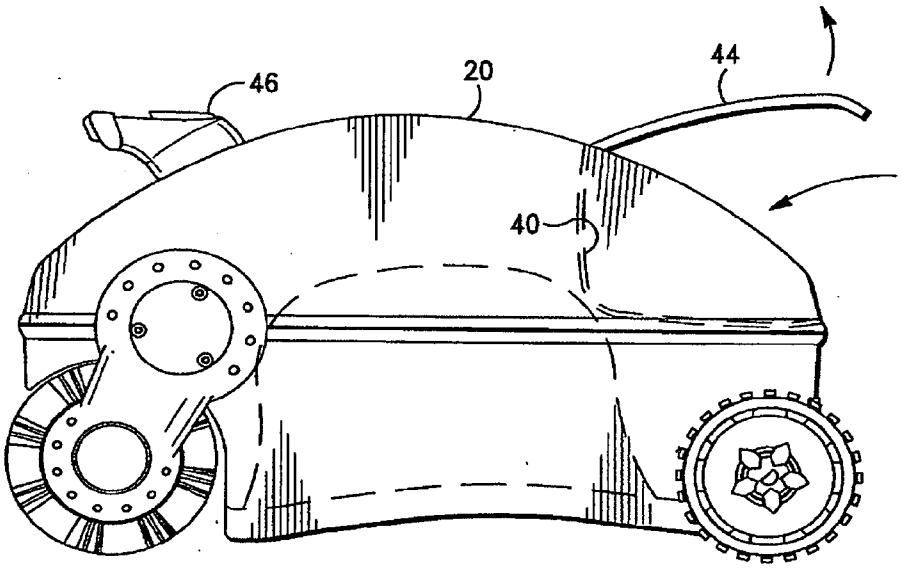

FIG. 4

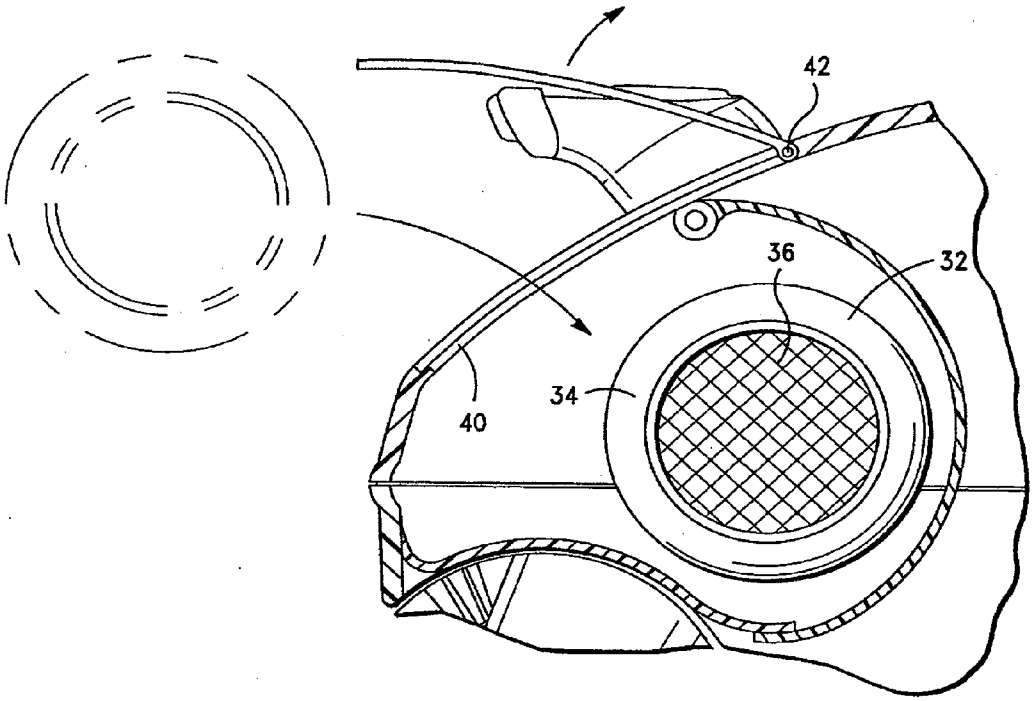

FIG. 5

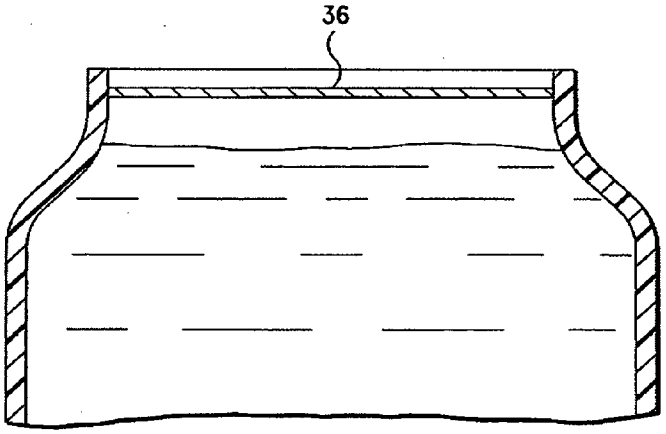

FIG. 6

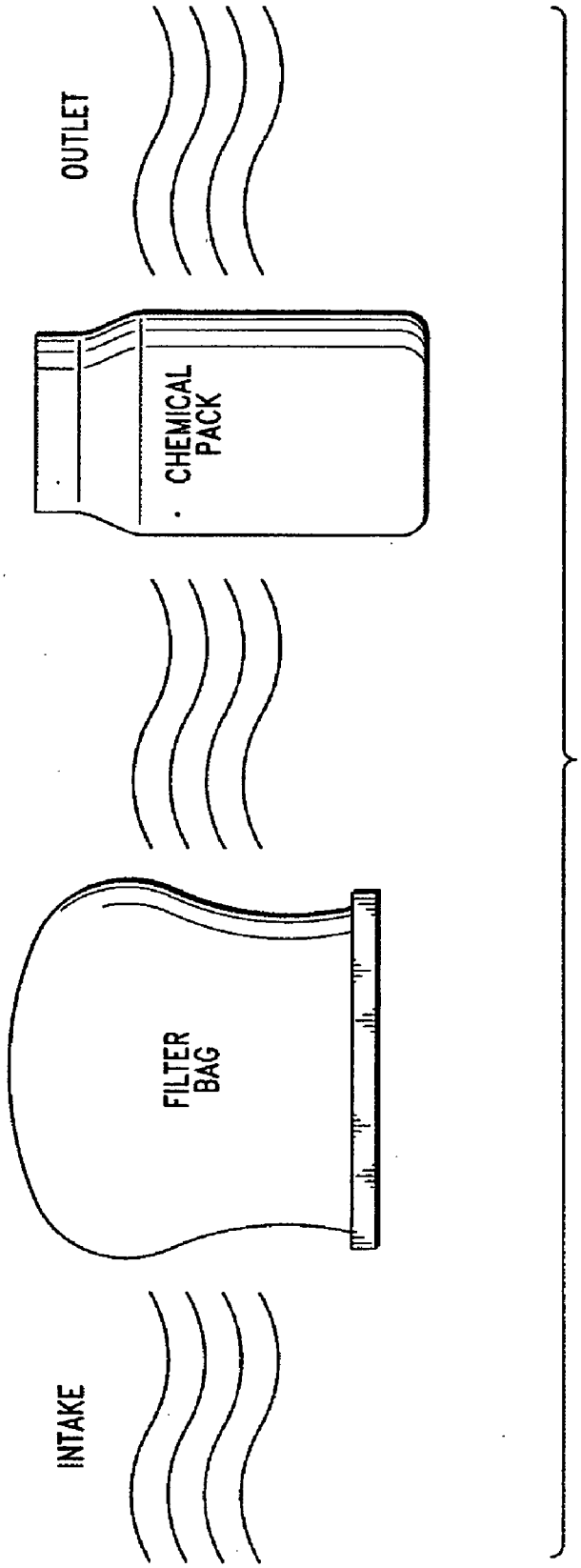

FIG. 7

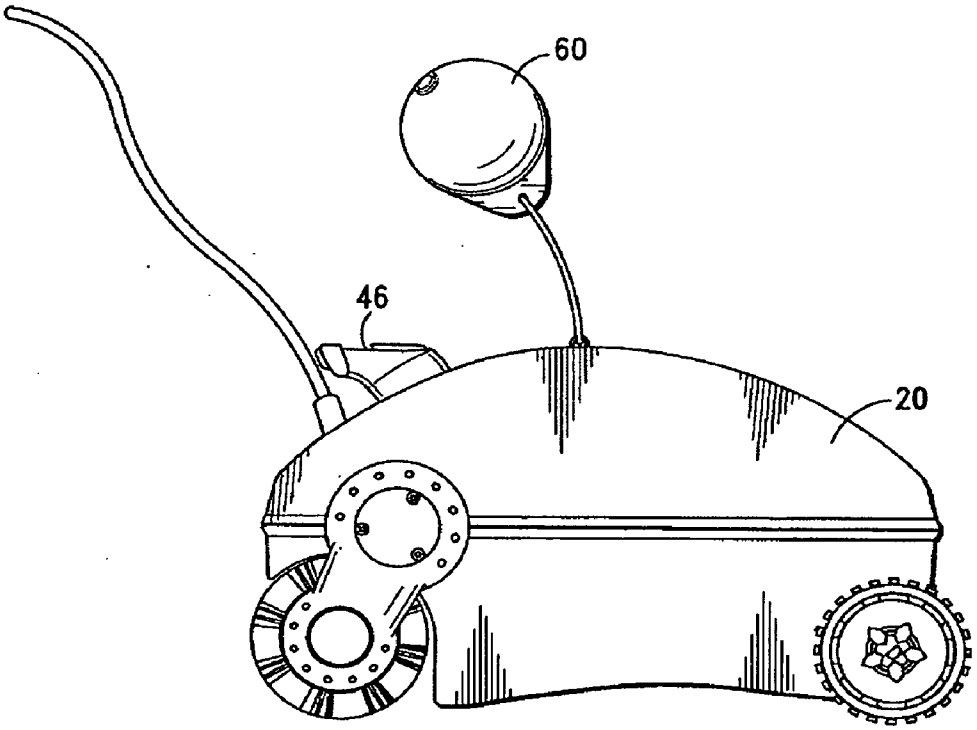

FIG. 8

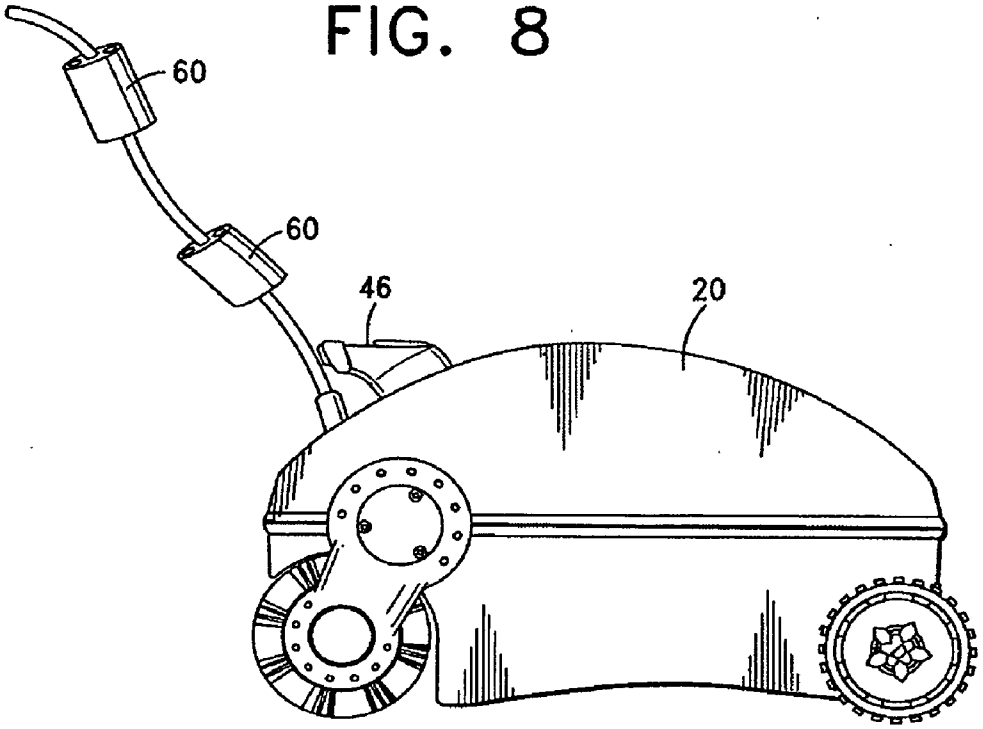

FIG. 9

POOL CLEANING VEHICLE HAVING STRUCTURE FOR CLEANING AND SANITIZING POOL WATER

FIELD OF THE INVENTION

[0001] This invention generally relates to the field of automated pool products. More particularly, this invention relates to a swimming pool vehicle, which includes the ability for cleaning and sanitizing pool water.

BACKGROUND OF THE INVENTION

[0002] It is now well accepted that automated pool cleaning devices, such as self propelled pool cleaning vehicles are essential to the proper maintenance of a pool, whether the pool be above or below ground. The typical vehicle includes a housing, a bottom frame and a filtering member, such as a filter bag, held between the two. The vehicle includes intake and outlet ports.

[0003] As the pool cleaner moves along the surface of the pool, water flows into the intake port and through to the filter bag. The typical pool cleaning vehicle includes a pump which creates suction. The suction helps cause the housing intake door to open and allow water to flow therethrough as the vehicle moves.

[0004] Upon entering the filter bag, the pool water is cleaned. Dirt and debris are trapped wherein the filter bag. Water then exits through the outlet port, cleaner and with less dirt and debris prior to re-entering the pool.

[0005] While this type of cleaning is required and essential for the maintenance of pool water, it is also insufficient. Water must be fit for human contact before it can be usable as pool water. Thus, it is simply not enough for the water to be clean or in other words, relatively free of dirt and debris, it must be sanitary.

[0006] In order to sanitize the water and make it fit for human contact, chemicals such as chlorine, are typically are placed in the pool water. However, adding chemicals to pool water requires some precision. Obviously, adding too much of a particular chemical, such as chlorine, could equally make the pool water dangerous and unsafe for human usage.

[0007] Thus, a balance needs to be struck between no chemicals or too little chemicals and too much chemicals. A large number of pool owners employ experts in the field of pool maintenance to add the proper chemicals and in the right amount to the pool. Maintenance of this type is continuous and can easily become quite expensive.

[0008] On the other hand, pool owners find adding the proper chemicals in the correct amount time consuming and quite tedious using manual methods. Pool water must be measured and referenced. Then on a regular basis, such as weekly, the pool owner will check his water chemical levels. The pool owner will then need to measure and add the proper amount of chemicals.

[0009] Quite clearly, being expert at testing and measuring and adding chemicals to pool water is not an easy task. It is a tedious task and one that requires constant vigilance. Even an occasional mistake can lead the pool water to be unfit for human use and contact. In such cases, a pool sometimes will need to be drained. Quite clearly this is not desirable and should be avoided as much as possible. This is especially so in drought prone areas where water is almost always at a premium.

[0010] There are current and past floatation devices in the past which have included cages for holding solid chemicals and openings for allowing chlorine to mix with the pool water. The chlorine mixes with the surface water of the pool and is only partially effective at adding chlorine to the water. The surface water is the most exposed to the sun of all the pool's water and the chlorine is most likely to evaporate and become ineffective as a result of being on the surface the quickest. Additionally, the mixing of the chemicals on the surface does not necessarily penetrate to the lower levels of the pool water.

[0011] What is needed is an automated device, which can, over time, add the proper chemicals and the proper amount of chemical to pools. Also, needed is such an automated device, which ensures proper mixing of the chemicals with the pool water

SUMMARY OF THE INVENTION

[0012] The structure, in accordance with the present invention, is a pool cleaning vehicle, having a chemical dispenser for adding chemicals to pool water. The chemical dispenser in one embodiment is integral with the vehicle housing and in other embodiments is external to the vehicle. In all cases, the chemical dispenser works cooperatively with the pool cleaning vehicle. The vehicle typically includes a filter bag, which traps dirt and debris and prevents its return to the pool water.

[0013] The combination of cleaning the pool water of particulate materials and the addition of chemicals act to clean and sanitize the pool, generally and make the pool water fit for intimate human usage. Thus, the combination of the vehicle's filter function plus the chemical dispenser's ability to add the proper chemicals in the right amounts results in pool water which is clean and sanitary. And, since the above is done by automated means, the result device offers clean and sanitary water for pool owners and in commercial settings with a minimum of amount of labor.

[0014] Thus, it is an object of this invention is to provide a pool cleaning vehicle having a chemical dispenser for adding chemicals to pool water in an automated fashion.

[0015] It is an additional object of this invention to provide such a pool cleaning vehicle, which can be integrated with known pool cleaning vehicles.

[0016] It s an additional object of this invention to provide such a pool cleaning vehicle, which uses both liquid and solid chemicals to be added to the pool water and which does not require the user to handle the chemicals directly.

[0017] In accordance with the objects set forth above and as will be described herein, the pool cleaning vehicle including a housing and the housing having an interior, the pool cleaning vehicle in accordance with this invention, comprises:

- **[0018]** a chemical dispenser member connected to the housing, the chemical dispenser having a hollow interior suitable for storing chemicals for sanitizing pool water, the chemical dispenser having an inlet for allowing pool water to contact the chemical dispenser member;
- **[0019]** the chemical dispenser member having a dissolvable seal and upon continued contact with water, the seal dissolving;
- **[0020]** the chemical dispenser having an outlet facilitating communication between the chemical dispenser member and the pool water through the chemical dispenser member outlet;
- **[0021]** whereby upon the seal being dissolved, communication between the interior of the chemical dispenser member and the pool water is established.

[0022] In another exemplary embodiment, the chemical dispenser member includes chemicals in its interior for sanitizing the pool water. The chemicals are in a self contained container and are sealed with the water dissolvable seal as recited above. Upon dissolving of the seal, an opening to the container is revealed. The opening, in large part, determines the amount of chemicals, which are released into the pool. Additionally, there may be more than one sealable opening depending upon the amount of chemical that is to be released to the pool water.

[0023] It will be appreciated that a series of openings could be provided to provide cross-ventilation of the container. This would clearly increase the amount of chemical released into the pool water.

[0024] In another exemplary embodiment, the chemical or chemicals within the container may be liquid or solid.

[0025] In another exemplary embodiment, the method of cleaning and sanitizing the pool water is disclosed. The steps of the method in accordance with this invention, comprise:

[0026] causing the pool water to enter the vehicle;

[0027] filtering the pool water through use of a filter bag;

[0028] transferring pool water through chemical dispenser member;

[0029] out flowing pool water to the pool after passing through the filter bag and the chemical dispenser member

[0030] It is an advantage of the pool cleaning vehicle in accordance with this invention to clean and sanitize pool water while minimizing the amount of time required and while using, as much as possible known pool cleaning devices.

[0031] It is an additional advantage of the instant invention to provide such a vehicle, which does not require the user to come into direct contact with the chemicals themselves.

BRIEF DESCRIPTION OF THE DRAWING

[0032] For a further understanding of the objects and advantages of the present invention, reference should be had to the following detailed description, taken in conjunction with the accompanying drawing, in which like parts are given like reference numerals and wherein:

[0033] FIG. **1** is a bottom perspective view of the pool cleaning vehicle in accordance with this invention illustrating a chemical dispenser member.

[0034] FIGS. **2-4** are side plan views of other exemplary embodiments of the pool cleaning vehicle in accordance with this invention illustrating a chemical dispenser member integrated within the interior of the vehicle housing.

[0035] FIG. **5** is an enlarged plan view illustrating the insertion of the chemical for sanitizing pool water into the chemical dispenser member for an exemplary embodiment of the pool cleaning vehicle in any of FIGS. **2-4**.

[0036] FIG. **6** is a side view of the container including liquid chemical for sanitizing pool water.

[0037] FIG. **7** is a schematic of the flow chart, illustrating the method of the invention for cleaning and sanitizing pool water in accordance with this invention.

[0038] FIGS. **8** & **9** illustrate additional exemplary embodiments of the chemical dispenser member in accordance with this invention, wherein the chemical dispenser member is external to the vehicle.

DETAILED DESCRIPTION OF THE INVENTION

[0039] With respect to FIG. **1** there is shown an exemplary embodiment of the pool cleaning vehicle in accordance with this invention generally denoted by the numeral **20**. The vehicle **20** includes a chemical dispenser member **30**. The vehicle **20** includes chemical packets **32** held by the chemical dispenser member **30**.

[0040] The packet **32** is shown in close up view in FIG. **5**. The packet **32** has an outer surface or skin **34**. The outer surface is non-reactive and impenetrable by water. However, the packet **32** has a water soluble seal **36**. The seal **36** is dissolvable upon continued contact with the pool water. Upon the seal **36** dissolving, chemicals within the packet **32** are released through the opening created by the dissolved seal **36**.

[0041] As the vehicle **20** moves along the pool surface through the pool water, it releases it chemicals throughout its travels. The vehicle **20** operates at the floor of the pool. That means that mixing of the chemicals released by the chemical dispenser member **30** occurs at the bottom of the pool. By mixing the chemicals at the lower depths of the pool water, complete mixing is encouraged. Unlike releasing chemicals at the surface water level where the chemicals to be dissolved in the water are much more likely to evaporate or become ineffective before complete mixing.

[0042] FIG. **2** illustrates another exemplary embodiment of the vehicle **20** in accordance with the invention. In this embodiment, the chemical dispenser member **30** is integral with the vehicle. Here, the vehicle **20** includes a chemical dispenser member **30** having its own compartment **40**.

[0043] The compartment **40** includes a compartment door **44**, which rotates on an axle **42** when the door **44** is lifted to the open position as shown in FIG. **3**. FIG. **3** shows the compartment **40** on one end of the vehicle **20**, while FIG. **4** shows the compartment **40** on the to the end of the vehicle **20** in another exemplary embodiment.

[0044] As is known, in order to remove the pool from the water, the vehicle includes a handle **46**. In the exemplary embodiment shown in FIGS. **2** & **3**, the compartment **40** is proximate the handle **46**. In this embodiment, the door **44** swings open and closed and must be place on the housing of the vehicle **20** and sized and shaped so as not to be obstructed by the handle **46**.

[0045] The door **44** opens to allow a chemical packet **32** to be placed in the compartment **40** as best shown in FIG. **5**. As noted above, the outside surface **34** of the chemical packet **32** is non-reactive. Thus, when the user places the sealed packet **32**, the act is done so without the user contacting the chemicals themselves.

[0046] As the vehicle **20** moves around the pool, water flows through the vehicle interior generally in the direction indicated by the arrows of FIG. **2**. As the vehicle moves through the water, the pool water enters the vehicle through the inlets **50**. As shown, the pool water enters the filter bag **60** after entering the vehicle **20**. As the vehicle continues its movement through the pool water and also through the action of an internal pump, which creates a vacuum in the interior of the pool vehicle housing, the water proceeds from the filter bag to the compartment **40** through the inlet of the compartment.

[0047] As described above, upon sufficient contact with the water, the water soluble seal of the chemical packet dissolves and releases chemical(s). The water mixes with the chemicals and upon continued pumping and movement of the vehicle **20**, the water returns to the pool through the outlet of the compartment **40**. Whereby, upon return to the pool, the water has been filtered so it's free of dirt and debris and mixed with chemicals for sanitizing the water.

[0048] FIG. **6** illustrates, in cross section, the container **32** holding the chemical(s) for sanitizing the pool water. The outer surface **34** of the container **32** is non-reactive with water. Neither is the outer surface reactive to a human touch. For example, in the exemplary embodiment shown the container is made from glass.

[0049] The container includes a water soluble seal **36**. In the embodiment of FIG. **6**, the chemical is a liquid chemical. In the earlier described embodiments, the chemical(s) is a solid.

[0050] With particular reference to the schematic of FIG. **7**, there is shown a method of cleaning and sanitizing the pool water according to the invention set forth herein. As described above pool water enters the vehicle through the intake of the housing. From there the water goes through the filter bag where dirt and debris are trapped. The water continues its path through the filter bag to the chemical packet.

[0051] The chemical packet is held within the container. The container has an inlet and water flows through the inlet into the container. While in the container, the water contacts the water soluble seal, eventually dissolving the seal and allowing the chemical to escape the packet and mix with the pool water.

[0052] After mixing with the chemical, the water proceeds to the container outlet and then returns to the pool water. The process continues and eventually the entire contents of the chemical(s) are mixed with the pool water. As noted above since the mixing occurs at the bottom levels of the pool, less of the chemical is exposed to sunlight and less will be likely to evaporate and become ineffective for sanitizing.

[0053] FIGS. **8** & **9** show an alternative embodiment of the vehicle in accordance with the invention having a chemical dispenser member **30** external to the housing. In these embodiments, the container **60** normally floats even with the chemical packet inside the container.

[0054] The container(s) **60** is tethered to the housing in a suitable manner. FIG. **8** represents the single container embodiment, while FIG. **9** represents the multiple container embodiment. Each embodiment shares the fact that the chemical mixes directly with the pool water without use of the housing or the filter bag.

[0055] While the foregoing detailed description has described several embodiments of the pool cleaning vehicle in accordance with this invention, it is to be understood that the above description is illustrative only and not limiting of the disclosed invention.

[0056] Particularly, there are variety of different kinds of chemical packets, chemical containers and different chemical that could be used in conjunction with the vehicle to clean and sanitize the pool water within the spirit and scope of the invention. It also will be appreciated that there are various modifications to the chemicals and the location of the chemical dispenser member are also within the spirit and scope of the invention herein and that of particular interest is the ability of the chemical dispenser member to work cooperatively with the pool cleaning vehicle to clean and sanitize pool water. Thus, the invention is to be limited only by the claims as set forth below.

What is claimed is:

1. A pool cleaning vehicle for sanitizing and cleaning pool water, the vehicle including a housing and the housing having an interior, the vehicle comprising:

a chemical dispenser member connected to the housing, the chemical dispenser member having a hollow interior suitable for storing chemicals for sanitizing pool water, the chemical dispenser having an inlet for allowing pool water to contact the chemical dispenser member;

the chemical dispenser member having a dissolvable seal and upon continued contact with water, the seal dissolving;

the chemical dispenser having an outlet facilitating communication between the chemical dispenser member and the pool water through the chemical dispenser member outlet;

whereby upon the seal being dissolved, communication between the interior of the chemical dispenser member and the pool water is established.

2. A pool cleaning vehicle as set forth in claim **1**, wherein a chemical for sanitizing the pool water is held in interior of the chemical dispenser member.

3. A pool cleaning vehicle as set forth in claim **2**, wherein the chemical is a solid.

4. A pool cleaning vehicle as set forth in claim **2**, wherein the chemical is a liquid.

5. A pool cleaning vehicle as set forth in claim **1**, wherein the vehicle includes a filter bag within the interior of the housing and the filter bag is in communication with the chemical dispenser member.

6. A pool cleaning vehicle as set forth in claim **5**, wherein pool water flows through the filter bag and then through the chemical dispenser member before returning to the water through the chemical dispenser member outlet.

7. A pool cleaning vehicle as set forth in claim **5**, wherein the chemical dispenser member is within the interior of the housing.

8. A pool cleaning vehicle as set forth in claim **5**, wherein the chemical dispenser member is not within the interior of the housing.

9. The method of cleaning and sanitizing pool water using a pool cleaning vehicle, the steps comprising:

causing the pool water to enter the vehicle;

filtering the pool water through use of the filter bag;

transferring pool water through chemical dispenser member;

out flowing pool water to the pool after passing through the filter bag and the chemical dispenser member.

10. The method of claim **9**, wherein the pool water mixes with chemical for sanitizing the pool water as it passes through the chemical dispenser member.

11. A pool cleaning vehicle for sanitizing and cleaning pool water, the vehicle including a housing and the housing having an interior, the vehicle comprising:

a chemical dispenser member connected to, but external to the housing, the chemical dispenser member having a hollow interior suitable for storing chemicals for sanitizing pool water, the chemical dispenser having an inlet for allowing pool water to contact the chemical dispenser member;

the chemical dispenser member having a dissolvable seal and upon continued contact with water, the seal dissolving;

the chemical dispenser having an outlet facilitating communication between the chemical dispenser member and the pool water through the chemical dispenser member outlet;

whereby upon the seal being dissolved, communication between the interior of the chemical dispenser member and the pool water is established.

12. A pool cleaning vehicle as set forth in claim **11**, wherein the chemical dispenser member connected to the housing by a tether.

13. A pool cleaning vehicle as set forth in claim **12**, wherein there are multiple chemical dispenser members.

14. A chemical dispenser for use in connection with a pool cleaning vehicle, the pool cleaning vehicle having a housing, the chemical dispenser, comprising:

a container member connectable to the pool cleaning vehicle housing, the container member having a hollow interior suitable for storing chemicals for sanitizing pool water, the container member having an inlet for allowing pool water to enter the interior and an outlet capable of communicating with the pool water;

the container member having a dissolvable seal for sealing the inlet and;

whereby, upon sufficient contact with the water, the seal dissolves and water enters the container and mixes with chemical in the interior of the container and after mixing with the chemical, the water flowing back to the pool water through the outlet.

* * * * *