UNITED STATES PATENT AND TRADEMARK OFFICE

BEFORE THE PATENT TRIAL AND APPEAL BOARD

WYBOTICS, CO. LTD.
f/k/a Tianjin Wangyuan Environmental Protection and Technology Co., Ltd.
Petitioner

v.

ZODIAC POOL SYSTEMS LLC
Patent Owner

U.S. Patent Nos. 11,003,191; 11,262,766; 11,880,207

DECLARATION OF DR. CHARLES F. REINHOLTZ IN SUPPORT OF PETITIONS FOR *INTER PARTES* REVIEW OF U.S. PATENT NOS. 11,003,191, 11,262,766, 11,880,207

TABLE OF CONTENTS

Page

I. INTRODUCTION 1

II. QUALIFICATIONS 2

III. MATERIALS REVIEWED 9

IV. LEVEL OF ORDINARY SKILL IN THE ART 10

V. RELEVANT LEGAL STANDARDS 12

VI. SUMMARY OF OPINIONS 17

A. ’191 Patent 18

B. ’766 Patent 18

C. ’207 Patent 19

VII. DESCRIPTION OF THE CHALLENGED PATENTS 20

A. ’191 Patent 20

B. ’766 Patent 22

C. ’207 Patent 25

VIII. CLAIM CONSTRUCTION 27

IX. TECHNOLOGY BACKGROUND 29

A. Brief History Of Automated Surface Cleaners 29

B. Computer-vision Based Underwater Navigation Was Known 32

C. Purported Inventive Aspects of Challenged Patents Relative to the Prior Art 33

X. SUMMARY OF APPLIED PRIOR ART 36

A. Fu 36

TABLE OF CONTENTS
(Continued)

Page

B. Schnittman 42

C. Benzler 48

D. Hui 51

E. Bailey 53

XI. ANALYSIS OF THE ’191 PATENT 54

A. Ground 1a: Fu Anticipates Claims 1-3 54

1. Independent Claim 1 54

2. Independent Claim 2 67

3. Independent Claim 3 69

B. Ground 1b: Claims 1-3 Would Have Been Obvious Over Fu 70

C. Ground 1c: Claims 1-3 Would Have Been Obvious Over Fu In View of Benzler 72

D. Ground 2: Claims 1-3 Would Have Been Obvious Over Schnittman In View of Benzler 76

1. Schnittman Is Prior Art As Of December 30, 2010 76

2. Motivations to Combine 77

3. Independent Claim 1 84

4. Independent Claim 2 99

5. Independent Claim 3 100

XII. ANALYSIS OF THE ’766 PATENT 100

A. Ground 1a: Fu Anticipates Claims 1-4 100

1. Independent Claim 1 100

2. Independent Claim 2 112

TABLE OF CONTENTS
(Continued)

Page

3. Independent Claim 3 113

4. Independent Claim 4 118

B. Ground 1b: Claims 1-4 Would Have Been Obvious Over Fu 119

C. Ground 1c: Claims 1-4 Would Have Been Obvious Over Fu In View Of Benzler 121

1. Obviousness Of The "To, Or Away From" Limitation Over Fu In View Of Benzler 121

D. Ground 1d: Claim 5 Would Have Been Obvious Over Fu In View Of Hui 125

1. Independent Claim 5 125

E. Ground 1e: Claim 5 Would Have Been Obvious Over Fu In View of Benzler, In Further View Of Hui 128

F. Ground 2a: Claims 1, 2, And 4 Would Have Been Obvious Over Schnittman In View Of Benzler 129

1. Motivations To Combine 129

2. Independent Claim 1 134

3. Independent Claim 2 148

4. Independent Claim 4 148

G. Ground 2b: Claim 3 Would Have Been Obvious Over Schnittman In View Of Benzler, In Further View Of Bailey 148

1. Independent Claim 3 148

H. Ground 2c: Claim 5 Would Have Been Obvious Over Schnittman In View Of Benzler, In Further View Of Hui 155

1. Independent Claim 5 155

XIII. ANALYSIS OF THE '207 PATENT 158

BEATBOT EX1010
Beatbot v. Zodiac
Page 004

TABLE OF CONTENTS
(Continued)

Page

A. Ground 1a: Fu Anticipates Claims 1-3, 5-8, 12-14, And 19 158

1. Claim 1 158

2. Claim 2 170

3. Dependent Claim 3 177

4. Dependent Claim 5 179

5. Dependent Claim 6 180

6. Dependent Claims 7-8 181

7. Claim 12 182

8. Dependent Claim 13 187

9. Dependent Claim 14 187

10. Dependent Claim 19 188

B. Ground 1b: Claims 1-3, 5-8, 12-14, And 19 Would Have Been Obvious Over Fu 190

1. Claim 1 190

2. Claims 2, 3, 5-8, 12-14, And 19 192

C. Ground 1c: Claims 1-8, 11-14, And 19 Would Have Been Obvious Over Fu In View of Benzler 192

1. Motivations To Combine 192

2. Claim 1 193

3. Dependent Claim 4 195

4. Dependent Claim 11 198

5. Claims 2, 3, 5-8, 12-14, And 19 198

TABLE OF CONTENTS
(Continued)

Page

D. Ground 2a: Claims 1-7, 11-14, And 19 Would Have Been Obvious Over Schnittman In View Of Benzler 199

1. Motivations To Combine.....199

2. Claim 1 204

3. Claim 2 218

4. Dependent Claim 3.....223

5. Dependent Claim 4.....225

6. Dependent Claim 5.....226

7. Dependent Claim 6.....227

8. Dependent Claim 7.....227

9. Dependent Claim 11 229

10. Claim 12 230

11. Dependent Claim 13 233

12. Dependent Claim 14 233

13. Dependent Claim 19 234

E. Ground 2b: Claim 8 Would Have Been Obvious Over Schnittman In View Of Benzler, In Further View Of Fu.....236

1. Dependent Claim 8.....236

XIV. CONCLUSION.....240

XV. RESERVATION OF RIGHTS.....240

I. INTRODUCTION

1. I have been retained by counsel for Petitioner Wybotics, Co. Ltd. f/k/a Tianjin Wangyuan Environmental Protection and Technology Co., Ltd. ("Wybotics" or "Petitioner") to investigate and opine on certain issues relating to its Petitions on United States Patent No. 11,003,191 ("the '191 patent"), 11,262,766 ("the '766 patent") and 11,880,207 ("the '207 patent") (collectively, "the challenged patents"). I understand these Petitions request that the Patent Trial and Appeal Board ("PTAB" or "Board") review and cancel claims 1-3 of the '191 patent, claims 1-5 of the '766 patent, and claims 1-14 and 19 of the '207 patent (collectively, the "challenged claims").

2. Because these three patents share identical specifications, and because of the similarity of the challenged claims, I have provided a combined and identical declaration for each proceeding.

3. The opinions set forth in this declaration are based on my personal knowledge, my professional judgment, and my analysis of the materials and information referenced in this declaration, the attached exhibits, and **Appendix A** to this declaration.

4. I am being compensated for my work in this matter at an hourly rate of $600 per hour. My compensation does not depend on the outcome of these *inter partes* reviews or the co-pending district court litigations, and I have no other

financial interest in this *inter partes* review. I am over 21 years of age and am legally competent to testify. If called as a witness, I could and would testify to the opinions set forth below. I reserve the right to create additional summaries, tutorials, demonstratives, charts, drawings, tables, or animations that may be appropriate to supplement or demonstrate my opinions if I am asked to testify.

5. I understand that the challenged patents have been assigned to Zodiac Pool Systems LLC.

6. This declaration is based on the information currently available to me. To the extent that additional information becomes available, I reserve the right to continue my investigation and study, which may include a review of documents and information that may be produced, as well as testimony from depositions that have not yet been taken.

II. QUALIFICATIONS

7. In this section, I summarize my educational background, work experience, and other relevant qualifications. I have over 45 years of academic and professional experience in robotics, automation and mechanical design. A true and accurate copy of my curriculum vitae ("CV") is attached as **Appendix B** to this report.

8. I am an Emeritus Professor of Mechanical Engineering at Embry-Riddle Aeronautical University in Daytona Beach, Florida. I have held this position

since 2022. From August 2017 until May 2022, I served as Professor of Mechanical Engineering at Embry-Riddle. From May 2007 to August 2017, I served as Professor and Chair of the Mechanical Engineering Department at Embry-Riddle. In that capacity, I guided the nascent department from a bachelor's degree program with an initial Bachelors-only program with an enrollment of 29 students to a Ph.D.-granting department with a total enrollment of over 400 students. In my role as Emeritus Professor, I continue to teach classes, serve on committees and advise students in a voluntary capacity.

9. I previously held positions at Virginia Polytechnic Institute and State University ("Virginia Tech") as an assistant professor (1983-1988), associate professor (1988-1993), professor (August 1993-2007), W.S. White Chair for Innovation in Engineering Education (Aug. 1996 to Aug. 1999), Assistant Department Head and ABET Review Chair (1996-2002), and Alumni Distinguished Professor (2002-2007).

10. I received a Bachelor of Science degree in Mechanical Engineering from the University of Florida in 1976, a Master of Engineering from the University of Florida in 1980, and a Doctor of Philosophy in Mechanical Engineering from the University of Florida in 1983. In 1978, I worked for Burroughs Corporation as a Design Engineer in Orlando, Florida. My job responsibilities included design of products for electrophotographic printing.

11. I am a Fellow in the American Society of Mechanical Engineers (ASME) and have held numerous other positions within that organization, including Associate Technical Editor for the ASME Journal of Mechanical Design, and Paper Review Chairman and Proceeding Editor for the ASME Mechanisms Conference. I am also a member of the Association for Unmanned Vehicle Systems International (AUVSI), the Society of Automotive Engineers (SAE), Tau Beta Pi, Pi Tau Sigma, Sigma Xi, and Epsilon Lambda Chi.

12. I have received numerous honors and awards throughout my career, including receiving a National Science Foundation Presidential Young Investigator Award in 1987, the ASME Mechanisms Conference Procter and Gamble Best Paper in 1992, the Applied Mechanisms Conference Best Paper Award on two separate occasions. In 1999, I was awarded National Applied Mechanism Conference South-Pointing Chariot Award for lifetime contributions to the mechanisms and robotics community. In 2005, I received the National Instruments Virtual Instrumentation Applications Best Control Paper Award for "Developing a Fully Autonomous Vehicle for Virginia Tech's Entry in the DARPA Grand Challenge."

13. I have also received multiple teaching awards during my career, including the College of Engineering Certificate of Teaching Excellence (1987-88, 1997-98, 2001-02, 2006-07), Wine Award for Excellence in Teaching (1992), Virginia Tech Academy of Teaching Excellence (inducted 1992), Dean's Award for

Excellence in Teaching (1998), Ingersoll-Rand Faculty Award for Outstanding Contributions to the Mechanical Engineering Department (2000), Outstanding Faculty Member Award (2003), and the Alumni Teaching Award (2004). The Wine Award and the Alumni Teaching Award are two of the three most prestigious university-wide teaching awards offered at Virginia Tech.

14. Numerous other awards and recognitions are summarized in my CV, which is attached hereto as **Appendix B**. Among other things, my CV includes a list of works that I have published in archival journals and conference proceedings. I am also attaching **Appendix C**, which provides information about my expert witness experience.

15. In my forty plus years of academic work, I have taught a variety of courses, including Robotics, Advanced Robotics, Unmanned Systems, Mechanisms, Mechanical Design, and Mechatronics. My teaching and research have generally been focused on the design and analysis of robotics, and mechanical and electromechanical systems. As part of my teaching and research, I have served as the advisor to many successful robotics competition teams, including teams in the Intelligent Ground Vehicle Competition, RoboSub, RoboBoat, the Unmanned Aerial Systems Competition, the International Aerial Robotics Competition, and the Maritime RobotX Autonomous Vessel Competition. These competitions involve the complete design of mobile robotic systems, and they all include extensive use of

computer vision systems to detect and react to objects in the environment. The RoboSub and the Maritime RobotX Competition require autonomous underwater vehicle systems that navigate using computer vision. I also organized and ran the regional SeaPerch Robotics National Qualifying competition at Embry Riddle from 2012 through 2017. SeaPerch is a remotely-operated underwater vehicle competition for middle and high-school students.

16. I was team lead for qualifying teams in the 2004 and 2005 Defense Advanced Research Projects Agency ("DARPA") Grand Challenge Competitions, and I was team lead and principal investigator of the third-place overall team in the 2007 DARPA Urban Challenge, a competition to develop a fully autonomous automobile capable of navigating a complex, dynamic urban course along with human-driven vehicles and other robotic cars. In addition to receiving over one million dollars in direct support from DARPA, the team was awarded a $500,000 prize in recognition of our success in the competition.

17. I have authored over 125 journal and conference papers in the areas of mechanisms, kinematics, robotics, and mechanical design. I am the co-author of Mechanisms and Dynamics of Machinery, a popular textbook published by John Wiley. This textbook is focused on the design and analysis of mechanical devices and systems for the creation and transmission of forces and motion. I have served

as the lead investigator on over 65 funded research projects that have received grants totaling more than $15 million.

18. I was also an editor of four books, and I have been invited and provided presentations at numerous national meetings, including "Trends and Opportunities in Mechanisms Research," Plenary Session Speaker at the 4th National Applied Mechanisms and Robotics Conference, Cincinnati, Ohio, 1995; "Product Safety and Product Liability," Invited Lecture at the 2001 ASME World Congress, New York, NY, 2001; "Challenges and Opportunities Offered by the DARPA Grand Challenge," Invited Presentation at the 2004 AIAA Unmanned Aerial Vehicle Conference, Chicago, IL, September, 2004: and "Test Drive an Autonomous Vehicle" invited presentation to the United Services Automobile Association (USAA), San Antonio, TX, 2009.

19. I have significant experience in the design, fabrication, modification, control and implementation of mobile robots. My experience spans a wide variety of domains and environments, including robots that operate underwater and on the water surface, ground robots, aerial robots, underground robots, and robots that span these domains. The mobile robots I have developed were generally designed to operate autonomously using computer vision systems as at least a part of a sensor suite. These devices operate using many forms of propulsion, including wheels, tracks, legs, underwater thrusters, buoyancy engines, and propellers.

20. I first began developing computer vision systems for the control of robots in 1991 and have continued to be active in this area until today. My initial work focused on a computer-vision-based approach for controlling the motion of a nuclear service robot operating in a high-radiation steam-generator. *See* **Appendix B**, Funded Research, items 16, 18, 24, 27, 28, 27. Starting in 1994, I worked on the design of a mobile underwater robot for nuclear reactor vessel inspection. *See* **Appendix B**, Funded Research, items 21, 25, 26. In 1998-99 I worked on an autonomous vacuum cleaning robot. *See* **Appendix B**, Funded Research, items 46, 47. I have developed dozens of mobile robots and autonomous systems that use computer vision for navigation and control. My work in this area has been a significant part of my teaching activities, and it has been supported by private industry, the Departments of Defense, the Nation Science Foundation, the Naval Surface Warfare Center and many other organizations.

21. I have served as an expert witness and/or consultant on mobile robot matters for multiple companies and universities, including previous work with Wybotics (cleaning robots), Autel (aerial robots), Ghost Robotics (legged surveillance robots), iRobot Corporation (cleaning robots), and DJI (aerial robots).

22. In parallel with my academic career, I have co-founded three engineering companies: New River Kinematics; TORC Robotics; and Elevated

Innovations. Two of these companies, New River Kinematics and TORC Robotics, continue to enjoy success in the commercial market.

23. I am a named inventor on two patents: U.S. Patent No. 5,699,695 entitled "Spatial, Parallel-Architecture, Robotic Carpal Wrist," which issued on December 23, 1997; and U.S. Patent No. 4,998,942, entitled "Snubber Profile," which issued on March 12, 1991. The carpal wrist patent is focused on the mechanics, kinematics, and control of a complex mechanical arrangement of links and joints to create motion of an end effector, such as a robotic hand or foot.

24. In addition to the examples and information provided above, additional relevant information related to my education and professional experiences is provided in my CV, attached hereto as **Appendix B** to my report.

25. I consider myself an expert in the field of robotics and mechanical engineering relevant to the challenged patents due to my educational background and professional experience working as a professor of mechanical engineering and in the industry, including working with robotic systems such as those found in the challenged patents.

III. MATERIALS REVIEWED

26. In forming my opinions, I have drawn on my many years of education and experience researching, publishing, and working in the field of robotics, including my knowledge of what is and was generally known in the mobile robotics

field during the relevant timeframes. I have also relied on my understanding of information provided to me by counsel. A list of materials that I reviewed is attached to this Report as **Appendix A**.

27. Unless otherwise stated, I have personally reviewed all of the materials cited in this document and therefore have personal knowledge of these materials.

28. For any future testimony I may give in this matter, I may use some or all of the documents and information cited to, referred to, or identified in this report, as well as any additional materials that are entered into evidence in this matter.

29. My work on this matter is ongoing. As I examine additional materials and perform further analyses on current information, I reserve the right to revise and supplement my opinions and this report.

IV. LEVEL OF ORDINARY SKILL IN THE ART

30. I understand that patent claims are interpreted from the perspective of a hypothetical person of ordinary skill in the art ("POSA") at the time of the claimed invention. I understand that in defining a POSA the following factors may be considered: (1) the educational level of the inventors; (2) the type of problems encountered in the art; (3) prior art solutions to those problems; (4) the rapidity with which innovations are made; (5) sophistication of the technology; and (6) the educational level of active workers in the field. I understand that a POSA is a

BEATBOT EX1010
Beatbot v. Zodiac
Page 016

hypothetical individual having the qualities reflected by the factors above. I understand that a POSA would also have knowledge of the teachings of the prior art.

31. In reaching my opinions, I have been instructed to assume that the relevant date of the challenged patents is July 10, 2012 (the "priority date"), which is the filing date of U.S. Patent Application No. 13/545,918 (now U.S. Patent No. 9,388,595), to which all three challenged patents claim priority by virtue of being continuation applications. However, I have not expressed any opinions herein as to whether the challenged patents are entitled to that priority date. If the challenged patents are found to be entitled to a later priority date, it would not impact my analysis herein. Further, to the extent Patent Owner or an expert for Patent Owner asserts that the challenged patents are entitled to a priority date earlier than July 10, 2012, I reserve the right to respond to such assertions and offer my opinions under the asserted date.

32. Based on my review of the challenged patents and my background and experience in the robotics field, it is my opinion that a POSA in the relevant art of the challenged patents would have possessed a bachelor's degree in mechanical or electrical engineering or a related field, and two years' experience in designing and developing robotic pool cleaners or similar products, with additional experience substituting for education and vice versa. This definition for the POSA would have been applicable at the priority date of July 10, 2012.

33. As described above, I am at least a POSA and was so on the priority date. As shown by my qualifications and my CV attached as **Appendix B**, I am aware of the knowledge and skill possessed by a POSA at the priority date. In performing my analysis, I have applied the standard set forth above.

34. Unless otherwise stated, my opinions set forth herein are through the viewpoint of a POSA at the time of the invention.

V. RELEVANT LEGAL STANDARDS

35. I have been asked to provide my opinion as to whether certain claims of the challenged patents are invalid.

36. The opinions I am expressing in this report involve the application of my knowledge and experience to the evaluation of certain prior art with respect to the challenged patents. I do not consider myself to be an expert on matters of patent law. Therefore, I have requested the attorneys from Jones Day, who represent Wybotics, to provide me with guidance as to the applicable law in this matter. The paragraphs below express my understanding of how I must apply current principles related to patent validity to my analysis.

37. I have been informed that there are two ways in which prior art may render a patent claim unpatentable. First, the prior art can be shown to "anticipate" the claim. Second, the prior art can be shown to have made the claim "obvious" to a POSA.

38. I have been informed that a patented claim is invalid as anticipated if the claimed invention was (i) patented or described in a printed publication in this or a foreign country before its invention date; (ii) patented or described in a printed publication in this or a foreign country more than one year prior to its application date; (iii) described in an eventually published US patent application filed by another before its invention date; or (iv) described in a patent granted on a US patent application filed by another before its invention date.

39. I have been informed that a claim may be invalid as obvious if the subject matter described by the claim as a whole would have been obvious to a hypothetical POSA in view of a prior art reference or in view of a combination of references at the time the claimed invention was made. I have been informed that obviousness is determined from the perspective of a hypothetical POSA and that the asserted claims of the patent should be read from the point of view of such a person at the time the claimed invention was made. I have been informed that a hypothetical POSA is assumed to know and to have relevant prior art in the field of endeavor covered by the patent in suit.

40. I have been informed that there are two criteria for determining whether prior art is analogous and thus can be considered prior art: (1) whether the art is from the same field of endeavor, regardless of the problem addressed, and (2) if the reference is not within the field of the patentee's endeavor, whether the reference

BEATBOT EX1010
Beatbot v. Zodiac
Page 019

still is reasonably pertinent to the particular problem with which the patentee is involved. I have also been informed that the field of endeavor of a patent is not limited to the specific point of novelty, the narrowest possible conception of the field, or the particular focus within a given field. I have also been informed that a reference is reasonably pertinent if, even though it may be in a different field from that of the patentee's endeavor, it is one which, because of the matter with which it deals, logically would have commended itself to a patentee's attention in considering his problem.

41. I have also been informed that an analysis of whether a claimed invention would have been obvious should be considered in light of the scope and content of the prior art, the differences (if any) between the prior art and the claimed invention, and the level of ordinary skill in the pertinent art involved. I have been informed as well that a prior art reference should be viewed as a whole.

42. I have also been informed that in considering whether an invention for a claimed combination would have been obvious, I may assess whether there are apparent reasons to combine known elements in the prior art in the manner claimed in view of interrelated teachings of multiple prior art references, the effects of demands known to the design community or present in the marketplace, and/or the background knowledge possessed by a POSA. I have been informed that other

principles may be relied on in evaluating whether a claimed invention would have been obvious, and that these principles include the following:

43. A combination of familiar elements according to known methods is likely to be obvious when it does no more than yield predictable results;

44. When a device or technology is available in one field of endeavor, design incentives and other market forces can prompt variations of it, either in the same field or in a different one, so that if a POSA can implement a predictable variation, the variation is likely obvious;

45. If a technique has been used to improve one device, and a POSA would recognize that it would improve similar devices in the same way, using the technique is obvious unless its actual application is beyond their level of skill;

46. An explicit or implicit teaching, suggestion, or motivation to combine two prior art references to form the claimed combination may demonstrate obviousness, but proof of obviousness does not depend on or require showing a teaching, suggestion, or motivation to combine;

47. Market demand, rather than scientific literature, can drive design trends and may show obviousness;

48. In determining whether the subject matter of a patent claim would have been obvious, the inquiry must be objective, focusing on the knowledge and

motivations of an ordinary person skilled in the relevant art at the time of the invention rather than onthe avowed purpose of the named inventor controls;

49. One of the ways in which a patent's subject can be proved obvious is by noting that there existed at the time of invention a known problem for which there was an obvious solution encompassed by the patent's claims;

50. Any need or problem known in the field of endeavor at the time of invention and addressed by the patent can provide a reason for combining the elements in the manner claimed;

51. "Common sense" teaches that familiar items may have obvious uses beyond their primary purposes, and in many cases a POSA will be able to fit the teachings of multiple patents together like pieces of a puzzle;

52. A POSA is also a person of ordinary creativity, and is not an automaton;

53. A patent claim can be proved obvious by showing that the claimed combination of elements was "obvious to try," particularly when there is a design need or market pressure to solve a problem and there are a finite number of identified, predictable solutions such that a POSA would have had good reason to pursue the known options within their technical grasp.

54. I understand that I may not use hindsight in evaluating whether a claimed invention would have been obvious.

BEATBOT EX1010
Beatbot v. Zodiac
Page 022

55. I have further been informed that, in making a determination as to whether or not the claimed invention would have been obvious to a POSA, the Board may consider certain objective factors if they are present, such as: commercial success of products practicing the claimed invention, long-felt but unsolved need, teaching away, unexpected results, copying, and praise by others in the field. These factors are generally referred to as "secondary considerations" or "objective indicia" of nonobviousness. I have been informed, however, that for such objective evidence to be relevant to the obviousness of a claim, there must be a causal relationship (called a "nexus") between the claim and the evidence and that this nexus must be based on what is claimed and novel in the claim rather than something in the prior art. I have also been informed that even when they are present, secondary considerations may be unable to overcome primary evidence of obviousness (*e.g.*, motivation to combine with predictable results) that is sufficiently strong.

56. I have been informed that for *inter partes* reviews, invalidity must be shown under a preponderance of the evidence standard. I have been informed that to establish something by a preponderance of the evidence one needs to prove it is more likely true than not true.

VI. SUMMARY OF OPINIONS

57. During my review, I have evaluated the claims of the challenged patents and it is my opinion that each challenged claim is invalid. Below, I explain my

analysis and point to specific evidence supporting my conclusions. I reserve the right to supplement these findings should new information be made available.

A. '191 Patent

58. I have reviewed and analyzed the '191 patent.

59. Based on my review and analysis, it is my opinion that the challenged claims of the '191 patent are invalid based on the following grounds:

Ground	Claims	Basis
Ground 1a	1-3	Fu (EX1007, CN 101139007 B) anticipates under § 102
Ground 1b	1-3	Fu renders obvious under § 103
Ground 1c	1-3	Fu in view of Benzler (EX1013, U.S. Patent Pub. No. 20100299016) renders obvious under § 103
Ground 2	1-3	Schnittman (EX1008, U.S. Patent Pub. No. 20120169497) in view of Benzler renders obvious under § 103

B. '766 Patent

60. I have reviewed and analyzed the '766 patent.

61. Based on my review and analysis, it is my opinion that the challenged claims of the '766 patent are invalid based on the following grounds:

Ground	Claims	Basis
Ground 1a	1-4	Fu (EX1007, CN 101139007 B) anticipates under § 102
Ground 1b	1-4	Fu renders obvious under § 103
Ground 1c	1-4	Fu in view of Benzler (EX1013, U.S. Patent Pub. No. 20100299016) renders obvious under § 103
Ground 1d	5	Fu in view of Hui (EX1019, U.S. Patent Pub. No. 20110139727) renders obvious under § 103
Ground 1e	5	Fu in view of Benzler further in view of Hui renders obvious under § 103
Ground 2a	1, 2, 4	Schnittman (EX1008, U.S. Patent Pub. No. 20120169497) in view of Benzler renders obvious under § 103
Ground 2b	3	Schnittman in view of Benzler further in view of Bailey (EX1018, U.S. Patent No. 8,364,309) renders obvious under § 103
Ground 2c	5	Schnittman in view of Benzler further in view of Hui renders obvious under § 103

C. '207 Patent

62. I have reviewed and analyzed the '207 patent.

63. Based on my review and analysis, it is my opinion that the challenged claims of the '207 patent are invalid based on the following grounds:

Ground	Claims	Basis
Ground 1a	1-3, 5-8, 12-14, 19	Fu (EX1007, CN 101139007 B) anticipates under § 102
Ground 1b	1-3, 5-8, 12-14, 19	Fu renders obvious under § 103
Ground 1c	1-8, 11-14, 19	Fu in view of Benzler (EX1013, U.S. Patent Pub. No. 20100299016) renders obvious under § 103
Ground 2a	1-7, 11-14, 19	Schnittman (EX1008, U.S. Patent Pub. No. 20120169497) in view of Benzler renders obvious under § 103
Ground 2b	8	Schnittman in view of Benzler further in view of Fu renders obvious under § 103

VII. DESCRIPTION OF THE CHALLENGED PATENTS

A. '191 Patent

64. The '191 Patent, entitled "Pool Cleaning System and Method to Automatically Clean Surfaces of a Pool Using Images from a Camera," issued with three total claims, each independent. EX1001, (54), claims 1-3. The claims are directed to a self-propelled swimming pool cleaner and are substantially similar with only minor differences in wording. EX1001, claims 1-3. Each recites (1) a vehicle body, (2) means for moving the body within the pool, (3) a filter for retaining debris collected from the pool, (4) at least one camera for capturing an image of a portion of the pool, and (5) a controller for processing the image and generating corresponding control signals for moving the body. *Id*. I note that, while the specification describes embodiments where the camera is mounted remotely from

the vehicle body, the claims of the '191 patent all require the camera(s) to be positioned on or in the body.

65. The '191 Patent generally relates to "a robotic pool cleaner" that comprises a vehicle 30 with one or more propulsion mechanisms, a filter, a camera, and a controller. *Id*., 2:67-3:3, 3:4-19, 3:31-43. The vehicle 30 uses the propulsion mechanisms, such as "wheels, rollers, tracks, or other surface contacting members powered by a motor," to move along the submerged surfaces of the pool. *Id*., 3:31-43. Using its filter, the pool cleaner draws water from the pool and retains any debris present in the water. *Id*., 3:8-14. One or more cameras 32 "capture images of submerged surfaces … of [the] pool," and the images are used by the controller 42 "to generate control signals for steering vehicle 30 based upon signals received from cameras 32." *Id*., 3:51-53, 4:44-46.

66. The '191 Patent was filed on July 2, 2020 as U.S. Patent Application No. 16/919,750. *Id*., (21), (22). The '191 Patent is the fifth in a series of continuation applications and claims priority back to U.S. Patent Application No. 13/545,918 (now U.S. Patent No. 9,388,595), filed July 10, 2012. *Id*., (63).

67. I have reviewed the file history of the '191 Patent, and I understand that originally filed claims 1-19 were copies of the claims filed in the parent application, U.S. Patent Application No. 16/416,840 (the "'840 application"). *Compare*

EX1002[1] (file history of the '191 Patent), 17-19 *with* EX1009[2] (file history of the '840 application), 17-19. Prior to examination, the applicant filed a preliminary amendment, canceling claims 1-19 and adding new claims 20-22, which have since issued as claims 1-3 of the '191 Patent. EX1002, 38-41. I also understand that the Examiner identified "a controller positioned on or in the body, in electronic communication with the at least one camera, and configured to generate, in response to the captured image, at least one control signal to cause movement of the body within the swimming pool to, or away from, the first portion of the submerged surface" as the reason for allowance. *Id.*, 133-135. However, as I explain below, the purportedly inventive feature asserted by the Examiner was very well known in the art. *See infra* Sections XI.A.1.f-h., XI.B-C.

B. '766 Patent

68. The '766 Patent, entitled "Pool Cleaning System and Method to Automatically Clean Surfaces of a Pool Using Images from a Camera," issued with five total claims, each independent. EX1003, (54), claims 1-5. The claims are directed to a self-propelled swimming pool cleaner and are substantially similar with

---

[1] Exhibit 1002 is a true and correct copy of the file history of U.S. Patent No. 11,003,191, downloaded from https://patentcenter.uspto.gov/applications/16919750 on October 29, 2025.
[2] Exhibit 1009 is a true and correct copy of the file history of U.S. Patent Application No. 16/416,840, downloaded from https://patentcenter.uspto.gov/applications/16416840 on November 7, 2025.

only minor differences in wording. *Id*., claims 1-5. Each recites (1) a vehicle body, (2) means for moving the body within the pool, (3) a filter for retaining debris collected from the pool, (4) at least one camera for capturing an image of a portion of the pool, and (5) a controller for processing the image and generating corresponding control signals for moving the body. *Id*. Claim 5 additionally recites a chemical dispenser. *Id*, claim 5.

69. The '766 Patent generally relates to "a robotic pool cleaner" that comprises a vehicle 30 with one or more propulsion mechanisms, a filter, a camera, and a controller. *Id*., 2:67-3:3, 3:4-19, 3:31-43. The vehicle 30 uses the propulsion mechanisms, such as "wheels, rollers, tracks, or other surface contacting members powered by a motor," to move along the submerged surfaces of the pool. *Id*., 3:31-43. Using its filter, the pool cleaner draws water from the pool and retains any debris present in the water. *Id*., 3:8-14. One or more cameras 32 "capture images of submerged surfaces … of [the] pool," and the images are used by the controller 42 "to generate control signals for steering vehicle 30 based upon signals received from cameras 32." *Id*., 3:51-53, 4:44-46.

70. The '766 Patent was filed on Jan. 7, 2021 as U.S. Patent Application No. 17/143,624. *Id*., (21), (22). The '766 Patent is the sixth in a series of continuation applications and claims priority back to U.S. Patent Application No. 13/545,918 (now U.S. Patent No. 9,388,595), filed July 10, 2012. *Id*., (63).

71. I have reviewed the file history of the ’766 Patent, and I understand that originally filed claims 1-19 were copies of the claims filed in a parent application in the series, U.S. Patent Application No. 16/416,840 (the “’840 application”). *Compare* EX1004[3] (file history of the ’766 Patent), 17-19 *with* EX1009 (file history of the ’840 application), 17-19. Prior to examination, the applicant filed a preliminary amendment, canceling claims 1-19 and adding new claims 20-24, which have since issued as claims 1-5 of the ’766 Patent. EX1004, 38-42. I also understand that the Examiner identified “a controller (i) positioned on or in the body, (ii) in electronic communication with the at least one camera, and (iii) configured to generate, in response to the captured image, at least one control signal to cause movement of the body within the swimming pool to, or away from, the first portion of the submerged surface” of claim 20 as allegedly being inventive over the prior art. *Id.*, 133-137 (also identifying the “controller” limitations of claims 21-24 as allegedly inventive over prior art). However, as I explain below, the purportedly inventive feature asserted by the Examiner was very well known in the art. *See infra* Sections XII.A.1.f-h, XII.B-C.

[3] Exhibit 1004 is a true and correct copy of the file history of U.S. Patent No. 11,262,766, downloaded from https://patentcenter.uspto.gov/applications/17143624 on October 29, 2025.

C. ’207 Patent

72. The ’207 Patent, entitled “Pool Cleaning System and Method to Automatically Clean Surfaces of a Pool Using Images from a Camera,” issued with 20 total claims, three of which are independent. EX1005, (54), claims 1-20. The claims are directly broadly to systems and methods that use an image captured by a camera to control a pool system or equipment, such as a pool cleaner. *Id.*, claims 1-20. Claim 1 recites a self-propelled pool cleaning system with (1) a vehicle body, (2) means for moving the body within the pool, (3) a filter for retaining debris collected from the pool, (4) at least one camera for capturing an image of a portion of the pool, and (5) a controller for processing the image and generating corresponding control signals for moving the body. *Id.*, claim 1. Independent claims 2 and 12 are broader than claim 1’s pool cleaning system, reciting a pool system and a method for monitoring a pool system respectively. *Id.*, claims 2-12. All three independent claims recite the use of an image to control the operation of a pool equipment, such as a pool cleaner, but do so at different levels of abstraction.

73. The ’207 Patent generally relates to “a robotic pool cleaner” that comprises a vehicle 30 with one or more propulsion mechanisms, a filter, a camera, and a controller. *Id.*, 2:67-3:3, 3:4-19, 3:31-43. The vehicle 30 uses the propulsion mechanisms, such as “wheels, rollers, tracks, or other surface contacting members powered by a motor,” to move along the submerged surfaces of the pool. *Id.*, 3:31-

43. Using its filter, the pool cleaner draws water from the pool and retains any debris present in the water. *Id.*, 3:8-14. One or more cameras 32 "capture images of submerged surfaces … of [the] pool," and the images are used by the controller 42 "to generate control signals for steering vehicle 30 based upon signals received from cameras 32." *Id.*, 3:51-53, 4:44-46.

74. The '207 Patent was filed on Jan. 10, 2022 as U.S. Patent Application No. 17/572,388. *Id.*, (21), (22). The '207 Patent is the seventh in a series of continuation applications, and claims priority back to U.S. Patent Application No. 13/545,918 (now U.S. Patent No. 9,388,595), filed July 10, 2012. *Id.*, (63).

75. I have reviewed the file history of the '207 Patent, and I understand that originally filed claims 1-19 were copies of the claims filed in a parent application in the series, U.S. Patent Application No. 16/416,840 (the "'840 application"). *Compare* EX1006[4] (file history of the '207 Patent), 18-20 *with* EX1009 (file history of the '840 application), 17-19. Prior to examination, the applicant filed a preliminary amendment, canceling claims 1-19 and adding a new claim 20. EX1006, 41. In response to the sole Office Action, the applicant also added new claims 21-39. *Id.*, 99-105. I also understand that the Examiner identified "controller

[4] Exhibit 1006 is a true and correct copy of the file history of U.S. Patent No. 11,880,207, downloaded from https://patentcenter.uspto.gov/applications/17572388 on October 29, 2025.

(i) in electronic communication with the at least one camera and (ii) configured to generate, in response to the captured image, at least one control signal to cause movement of the body within the swimming pool to, or away from, the first object" as allegedly being inventive over the prior art. *Id.*, 146-150 (also identifying the "controller" limitation of claims 21 as allegedly inventive over prior art). The Notice of Allowance also identified claim 31's "method for monitoring a pool system, the method comprising: receiving images of at least a portion of a location including the swimming pool or spa from one or more cameras; determining a target area and detecting a characteristic of the target area based on the images; and generating a control response based on the detected characteristic of the target area" as allegedly being inventive over prior art. *Id*. However, as I explain below, the purportedly inventive features asserted by the Examiner were very well known in the art. *See infra* Sections XIII.A.1.f-g., XIII.A.2.d., XIII.A.7.a-d.

VIII. CLAIM CONSTRUCTION

76. It is my understanding that in determining whether a patent claim is anticipated or obvious in view of the prior art, the Patent Office must construe the claim by giving the claim its plain and ordinary meaning at the time of the alleged invention, consistent with the specification and prosecution history. For the purposes of this declaration, I have construed each claim term in accordance with its

BEATBOT EX1010
Beatbot v. Zodiac
Page 033

plain and ordinary meaning as of the purported July 2012 priority date of the challenged patents.

77. I understand that the claim term "means for moving the vehicle body within the swimming pool," as recited in some of the challenged claims, is a means-plus-function (MPF) claim term governed by 35 U.S.C. § 112(f).

78. Based on my reading of the specification, there are specific portions of the specification that describe the structure and functions for this claim term.:

Claim Limitation	**Corresponding Structures**	**Function**
means for moving the vehicle body within the swimming pool, '199 Patent: Elements 1b, 2a(ii), 3a(iii); '766 Patent: Elements 1b, 2b, 3b, 4b, 5b; '207 Patent: Element 1b	"In one implementation, vehicle 30 is propelled along the submerged pool surfaces using ***wheels, rollers, tracks or other surface contacting members powered by a motor and the like***. … In one implementation vehicle 30 may also alternatively be propelled by means of the ***vacuum or liquid jets***. … In other implementations, vehicle 30 may include other propulsion mechanisms." EX1001, 3:31-43.	Moving the vehicle body within the swimming pool

79. Thus, the corresponding structures disclosed in the specification for the "means for moving" term include "wheels, rollers, tracks or other surface contacting members powered by a motor and the like" and "vacuum or liquid jets." EX1001, 3:31-43; *see also id.,* 10:8-28 (describing drive motor, "toothed track drive 900" and rollers 908 of Figs. 9 and 10).

IX. TECHNOLOGY BACKGROUND

80. This section provides a brief state of the art as of the priority date of the challenged patents. All of the information in this section was available to the public and would have been part of a POSA's common general knowledge.

A. Brief History Of Automated Surface Cleaners

81. In 1967, Robert B. Myers invented the first robotic pool cleaner to use electricity (US 3,321,787, entitled Swimming Pool Cleaning means). *See* EX1021[5], EX1023. The patent describes the invention as relating to "a swimming pool cleaning device and more particularly to a cleaning means that is erratically self-propelled over the bottom surface of the swimming pool." EX1023, 1:8-11. According to the Maytronics website, Peter Rasch invented the first robotic pool cleaner. *See* EX1024[6]. Mr. Rasch's 1979 patent described and claimed the key features that are still the basis for electronic pool cleaners today. See EX1029. These key features include:

- a body

[5] Exhibit 1021 is a true and correct copy of an article, "The Birth of the Automatic Pool Cleaner," by Eric Herman published in AQUA Magazine on March 22, 2018, downloaded from https://www.aquamagazine.com/service/article/15121193/the-birth-of-the-automatic-pool-cleaner on November 20, 2025.

[6] Exhibit 1024 is a true and correct copy of an article, "Peter Rasch – Inventor of the Pool Cleaning Robot," published on Maytronic's website on September 30, 2012, downloaded from https://www.maytronics.com.au/peter-rasch-inventor-of-the-pool-cleaning-robot/ on November 20, 2025.

- four wheels on the body mounted on two shafts
- endless tracks joining pairs of wheels from opposed shafts
- an electrically driven motor for driving the wheels to propel the body
- a filter chamber in the interior of the body
- an inlet to the chamber on the base of the body
- an electrically driven pump for drawing water through the chamber
- a pump outlet from the body for expelling water in a direction normal to the base of the body

Id., claim 1. Rasch also disclosed that "the body 11 contains certain control elements for the motor 30 which is reversible, " (*id.*, 2:29-3) and "a random signal generator for generating switching impulses to operate the reversing switch at random intervals. *Id.*, claim 10. Rasch explained that "due to the thrust exerted by the impeller 26 the appliance is capable of climbing up vertical walls. *Id.*, 2:54-55. In 1983, Rasch partnered with Maytronics to launch the Dolphin, the first commercially-available residential robotic pool cleaner. *See* EX1024. The Dolphin embodied the key features that are common in today's robotic pool cleaners. It included waterproof motors and electronics and had its own motor and

filtration system, which allowed independent movement. The Dolphin was also able to clean both the pool floors and walls. *See* EX1025[7].

82. The first home floor cleaning vacuum was developed by Electrolux and called the Trilobite. It was revealed as a prototype in 1997, but it was not commercially available until 2001. *See* EX1022[8]. According to the Electrolux press release, "The Trilobite can "see" with the aid of ultrasound – just like a bat. *Id.* The system allows it to quickly detect a dog's water bowl, legs of chairs, walls and other obstacles, once detected, the Trilobite will calculate a new path." *Id.* Further, the press release noted that, "It has automatic charging, an LCD display, and the option to choose between three different cleaning programs (normal, quick, and spot vacuuming)." *Id.*

83. It may initially seem surprising that electronically powered and controlled pool-cleaning robots were commercially available in the consumer

---

[7] Exhibit 1025 is a true and correct copy of an article, "Diving into History: The Fascinating Evolution of Pool Cleaners & How They Changed the Way We Swim," by Emily Thompson published on Beatbot Blog on January 1, 2025, downloaded from https://beatbot.com/blogs/robotic-pool-cleaner/diving-into-history-the-fascinating-evolution-of-pool-cleaners-how-they-changed-the-way-we-swim?srsltid=AfmBOorYVHO3sm7nFQFpL-y5b34iv7aMcX8kbmQYUf2LU-G01trndhtz on November 20, 2025.

[8] Exhibit 1022 is a true and correct copy of a press release, "World's first automatic vacuum cleaner soon in shops," published by Electrolux on November 7, 2001, downloaded from https://news.cision.com/electrolux-group/r/world-s-first-automatic-vacuum-cleaner-soon-in-shops,c50625 on November 23, 2025.

market 18 years before similar floor-cleaning robots, but the explanation for this is straightforward. Floor-cleaning robots must operate in an unstructured environment, where obstacles (*e.g.*, a dog's water bowl, chairs and other common objects) and perilous drop-offs (*e.g.*, stairs) are common. This imposes a need for exteroceptive sensors that allow the robot to perceive the world around it and react accordingly. This need motivated developers of floor cleaning robots to pursue advanced but affordable, sensing, navigations and control techniques as a requirement for widespread adoption. These advances later found their way into pool-cleaning robots, where features such as obstacle avoidance and discrimination of different surface characteristics are desirable but not essential.

B. Computer-vision Based Underwater Navigation Was Known

84. By 2009 computer-vision-based underwater navigation systems were well known and well developed. The 2009 monograph "Underwater Vehicles" includes a full chapter on "Computer Vision Applications In the Navigation of Unmanned Underwater Vehicles." EX1026[9]. This chapter, written by Jonathan Horgan and Daniel Toal, describes vision-based navigation of underwater vehicles as follows: "Vision based navigation involves the use of one or more video cameras

[9] Exhibit 1026 is a true and correct copy of a chapter, "Computer Vision Applications in the Navigation of Unmanned Underwater Vehicles," of a monograph, "Underwater Vehicles," the chapter being written by Jonathan Horgan and Daniel Toal and published by IntechOpen on January 1, 2009, downloaded from https://www.intechopen.com/chapters/6213# on November 20, 2025.

mounted on the vehicle, a video digitizer, a processor and, in general, depending on depth, a light source. By performing image processing on the received frames, the required navigation tasks can be completed or required navigation information can be calculated." *Id.*, 4. The authors further note that, "Underwater vehicles are commonly fitted with vision sensors for biological, geological and archaeological survey needs. As such, they have become standard equipment onboard submersibles. As a readily available sensor, vision can be incorporated into a navigation framework to provide alternative vehicle motion estimates when working near the seafloor in relatively clear water. *Id.*, 5.

C. Purported Inventive Aspects Of Challenged Patents Relative To The Prior Art

85. In the Background section of the specification, the challenged patents describe the motivation for developing robotic pool cleaners and the state of the art of robotic pool cleaners as follows: "Manually cleaning the floor and sides of a swimming pool may be a tedious and time-consuming task. As a result, automated robotic pool cleaners have been developed." EX1001, EX1003, EX1005, Background. The remainder of the Background section describes the disadvantages of the prior art as follows: "However, controlling and monitoring such automated robotic pool cleaners to insure that all portions of the pool surfaces are satisfactorily cleaned remains a challenge." *Id.* This makes it clear that the purported inventive

aspects of these patents relate to controlling and monitoring existing automated pool cleaners to ensure satisfactory cleaning.

86. The challenged '191, '766 and '207 patents describe purported improvements over the prior art at a high level by presenting a series of system architecture diagrams and descriptions of those diagrams. Figures 1 and 2, reproduced below, are representative of the level of detail provided.

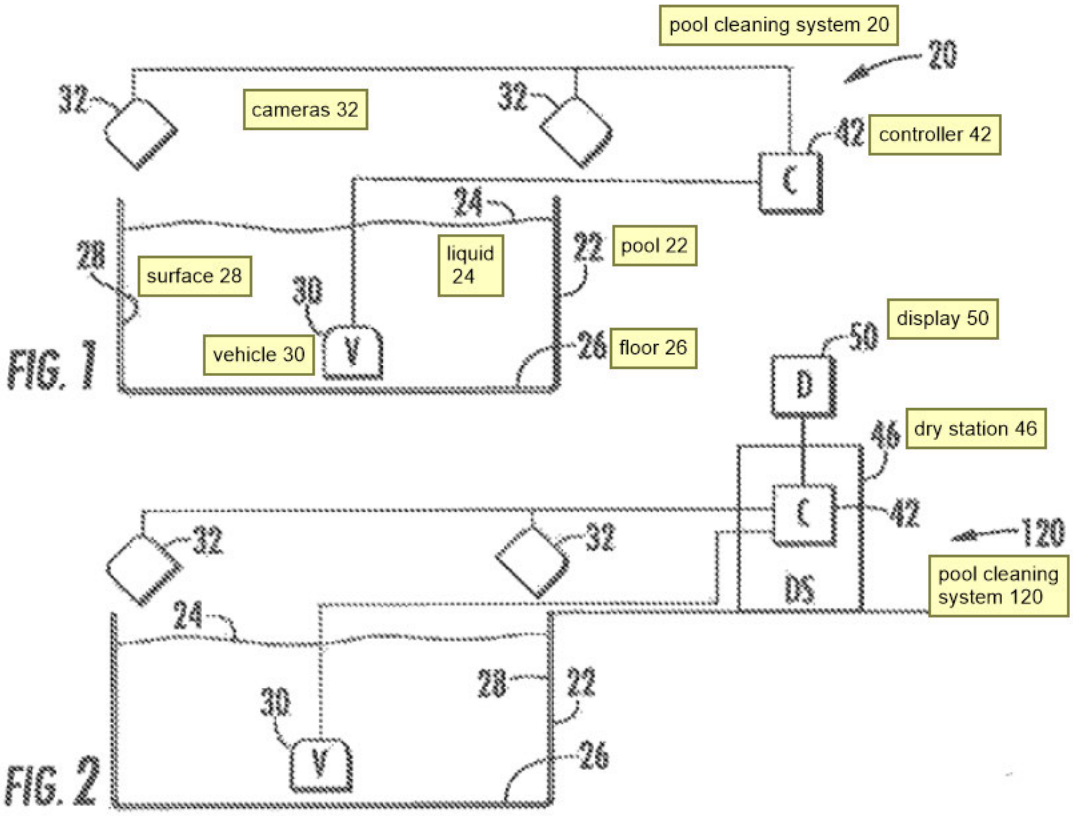

EX1001, EX1003, EX1005, Figs. 1-2 (annotated). I note that although all of the system diagram figures (*i.e.*, figures 1-5, 9) show cameras mounted externally to the pool, with one exception the claims of the '191,'766 and '207 patents either require or permit the camera(s) to be mounted on or carried by the vehicle body. The lone

exception to this is claim 4 of the '207 patent, which requires, "The pool system of claim 2, wherein the one or more cameras are mounted external to the swimming pool or spa." EX1005, claim 4. This suggests that prior art references that disclose controlling and monitoring surface cleaning robots using vehicle-mounted camera may be highly relevant to the validity of all but one of the challenged claims.

87. Patent Figure 6, reproduced below is a flow diagram depicting an example method that may be carried out with the pool cleaning system shown in figures 2-5.

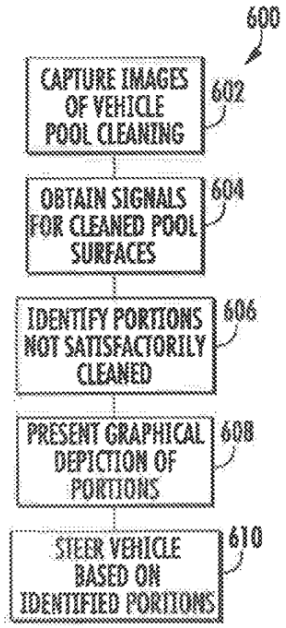

FIG. 6

EX1001, EX1003, EX1005, Fig. 6.

88. The high level of abstraction apparent in this figure is generally representative of level of detail in the challenged patents. The patents discuss and

claim system-level components and aspects of how the robot should behave, but they do not generally describe or restrict details of the hardware, electronics or software or how these are to be implemented. This again suggests that prior art that describes general system architectures and methods for camera-based navigation and control may be relevant to the validity inquiry.

89. The foregoing discussion is intended to provide an overview of the scope of the claims of the challenged patents in the context the prior art. I am not suggesting that the claims of the challenged patents are invalid because they purport to describe high-level camera-based architectures and methods for controlling and monitoring cleaning robots. Rather, I am suggesting that a POSA would look to the prior art that similarly describes camera-based navigation and control of cleaning robots.

X. SUMMARY OF APPLIED PRIOR ART

A. Fu

90. Fu, entitled "Underwater Cleaning Robot," was filed on July 31, 2007 as Application No. 200710119800.5 in China. EX1007, (19), (21), (22). Fu issued as Grant Publication No. CN 101139007 B, and published on June 15, 2011. *Id.*, (10), (45). Fu is therefore prior art under at least pre-AIA 35 U.S.C. §§ 102(a) and (b).

91. Fu describes a robot that is designed "for the underwater cleaning of swimming pool floors and walls." *Id*., Abstract. An example of Fu's underwater cleaning robot is depicted in Figure 1:

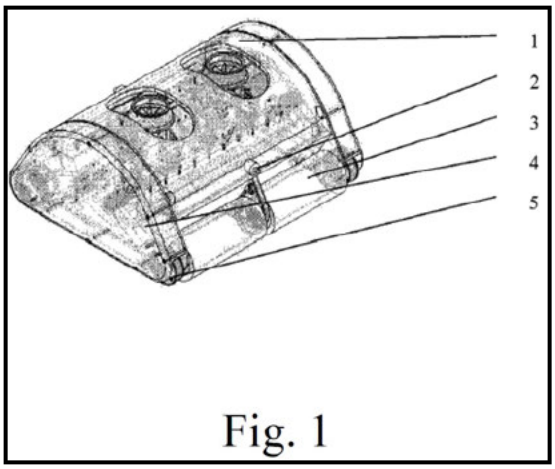

Fig. 1

Id., Fig. 1.

92. Fu describes two operational modes for cleaning: manual and autonomous. *Id*., ¶[0025]. In the manual mode, a control keypad is used to manually send control signals to the robot. *Id.* In the autonomous mode, the control system autonomously plans and controls the robot's movement and cleaning operations based on data received from sensors and cameras. *Id.*

93. The robot "comprises a drainage mechanism, a cleaning and mobility platform, and a control system." *Id*., ¶[0024]. These three units work in coordination to "perform cleaning tasks autonomously or via remote control underwater on horizontal, vertical, and inclined surfaces." *Id*., Abstract.

94. The drainage mechanism performs a cleaning function by drawing pool water into the robot, filtering it to remove any debris, and discharging the filtered water back into the pool. *Id.*, ¶¶[0024]-[0026]. An example schematic of the drainage mechanism is illustrated in Figures 3 and 5:

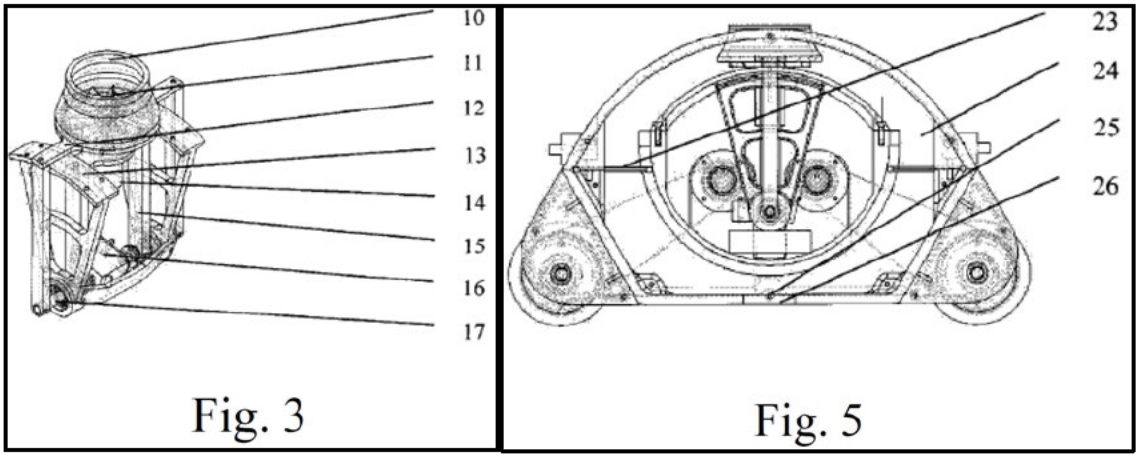

Id, Fig. 3 (water discharger), Fig. 5 (side cross-sectional view of the robot).

95. The drainage mechanism "comprises a water discharger [Figure 3], a water flow channel 24 …, a water flow filter screen 23, and a water inlet [26] with an anti-backflow device 25." *Id*, ¶[0024]. During operation, "the drainage propeller high-speed DC motor 14 … drives the drainage propeller 11 to rotate … expel[ling] water from within the robot's water flow channel 24, creating a high negative pressure inside." *Id.*, ¶[0026]. This negative pressure "draws pool water from the bottom of the robot into the water flow channel 24 through the water inlet [26]." *Id.* Once in the flow channel 24, the "water passes through the water flow filter screen 23, which filters out debris, and the clean water is then discharged." *Id.*

96. The drainage mechanism "uses the cleaning and mobility platform as a carrier and coordinates its movement with the cleaning and mobility platform." *Id.*, ¶[0024]. The cleaning and mobility platform, illustrated in Figure 1, comprises "a robot housing body 1, cleaning driving wheels 3, synchronous belt gears 5, and a driving synchronous belt 4." *Id.*

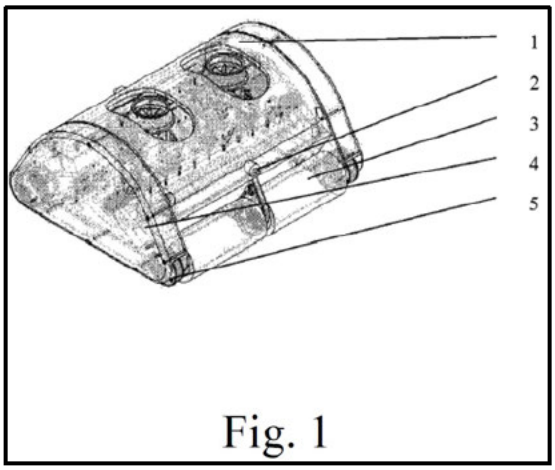

Fig. 1

Id., Fig. 1.

97. The "cleaning driving wheels 3 are controlled by their respective motor drivers … By using different combinations of wheel speeds, the robot can perform tasks such as moving forward, backward, turning, and brush-cleaning." *Id.*, ¶[0026]. The synchronous belt gears 5 and the driving synchronous belt 4 help drive the cleaning driving wheels 3 via a driving DC motor 7. *Id.*, ¶[0024]. In this way, the cleaning and mobility platform provides structural support and propulsion to the robot, while also performing "brush-cleaning" of the pool surface via the cleaning driving wheels 3. *Id.*, ¶¶[0024], [0026].

98. The control system autonomously controls the robot's operation by generating control signals that drive the robot's movement and cleaning. *Id.* As shown in Figure 6, the control system comprises "a central processor, monitoring cameras, an image acquisition card, inertial navigation components, a remote control signal interface, motor drivers, a control system box 8, cleaning driving wheel DC motors 7, a water outlet driving servo 16, a drainage propeller high-speed DC motor 14, a driving and control sealed housing, and a control and power management system." *Id.*, ¶[0024].

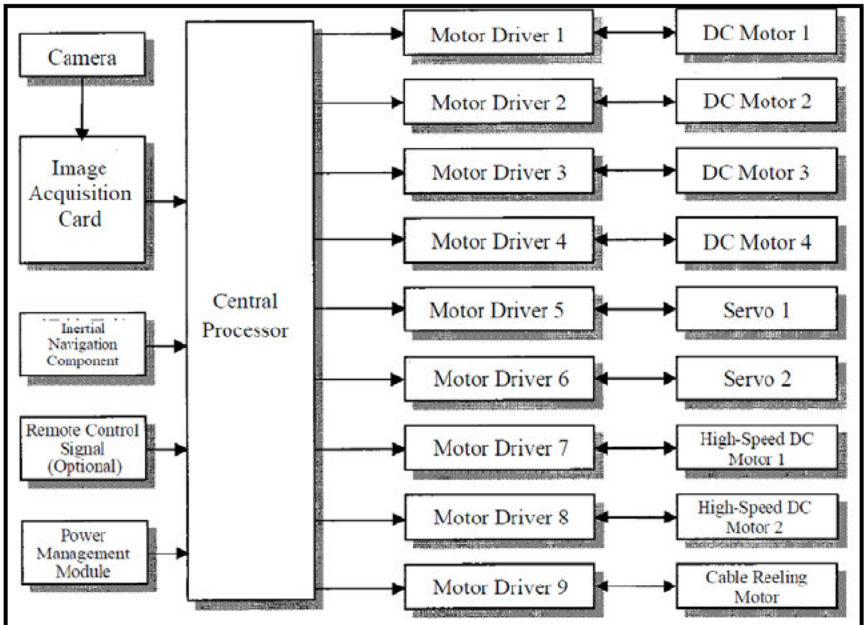

Fig. 6

Id., Fig. 6.

99. Fu's monitoring cameras 2, installed on the main robot housing body 19, are in communication with the central processor via the image acquisition card.

Id., ¶[0024], Fig. 6. "The monitoring cameras 2 and the image acquisition card constitute the environmental perception layer," which also "constitutes the input part of the control system." *Id.*, ¶[0024]. The central processor receives an image from the environmental perception layer, *i.e.*, monitoring cameras 2, and processes it to determine "the level of cleanliness" of the pool. *Id.*, ¶[0026]. Based on this determination, "control signals are generated by the central processor, which autonomously plans paths and actions … to … complete the underwater cleaning task." *Id.*, ¶[0025]. The central processor sends these control signals to "the robot's execution layer," also known as the "output part of the control system," which comprises "the motor drivers and the cleaning driving wheel DC motors 7." *Id.*, ¶¶[0024]-[0025]. Based on the control signals, the respective motor drivers and the cleaning driving wheel DC motors 7 drive the cleaning driving wheels 3. *Id.*, ¶[0026]. For example, "the speed of each wheel 3 can be adjusted," "cleaning actions of varying intensity can be achieved," and "the robot can perform tasks such as moving forward, backward, turning, and brush-cleaning." *Id.*

100. In this way, Fu's drainage mechanism, cleaning and mobility platform, and control system work in concert to control the underwater cleaning robot's movement and cleaning operations based on an image captured by the monitoring cameras 2.

B. Schnittman

101. Schnittman, EX1008, entitled "Debris Monitoring," was filed December 30, 2011, and published July 5, 2012. EX1008, (22), (43). Schnittman incorporates by reference and claims priority to U.S. Provisional Application No. 61/428,808 (the "'808 provisional"), filed December 30, 2010. *Id.*, (60). Schnittman is prior art under at least pre-AIA 35 U.S.C. §§ 102(a) and (e).

102. Schnittman discloses an autonomous cleaning robot having a debris monitoring system and onboard sensing for navigation and safety. *Id.*, Abstract, ¶¶[0002], [0004]-[0006]. An example of Schnittman's autonomous cleaning robots is depicted in Figure 3C:

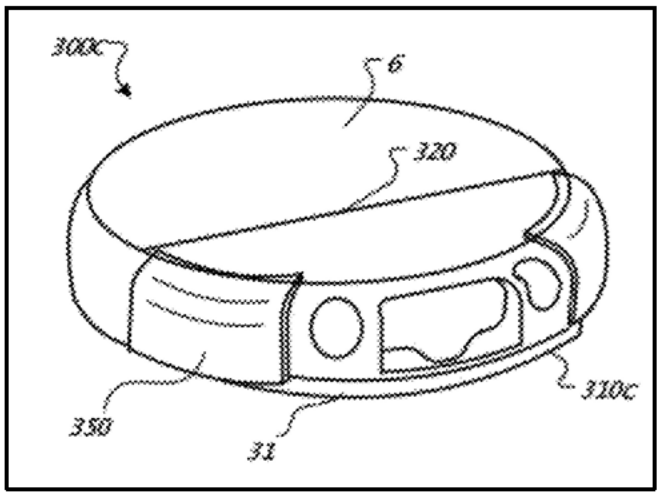

Id., Fig. 3C.

103. Embodiments of Schnittman's cleaning robot include a drive assembly, cleaning assemblies, and a sensor suite, enabling behaviors such as debris-dependent spot cleaning, edge/cliff avoidance, and autonomous return to a

maintenance/charging station. *Id.*, Fig. 2; ¶¶[0113], [0118]-[0119], [0191]-[0203], [0113], [0216]-[0227].

104. In embodiments, Schnittman's cleaning robot further includes a dedicated microprocessor 245 that executes routines and issues control signals to move the robot (*id.*, ¶¶[0118]-[0119]):

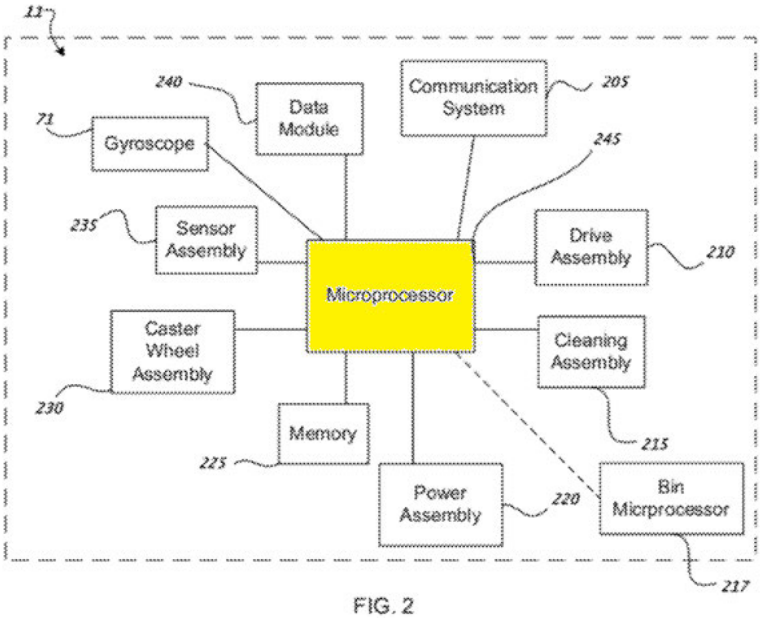

FIG. 2

Id., Fig. 2.

105. As seen above, the microprocessor 245 is connected to drive assembly 210, which includes differentially driven right and left wheels, wheel motors, and encoders. *Id.*, ¶[0119]. "The drive assembly 210 is operable to receive commands from the microprocessor 245." *Id.*

106. Schnittman further discloses that "in some implementations, the robot 11 includes a camera 1190 disposed toward the forward portion of the robot 11, with a field of view beyond the perimeter of the robot 11" (*id.*, ¶[0204]):

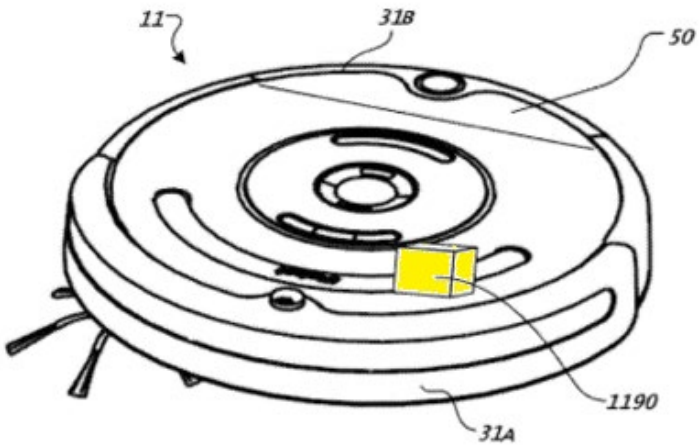

FIG. 11

Id., Fig. 11.

107. Further, "[i]n some implementations, the debris sensor includes a camera directed substantially forward of the cleaning apparatus. In certain implementations, the camera is movable to scan an area substantially forward of the cleaning apparatus." *Id.*, ¶[0045].

108. The camera 1190 is "in communication with the microprocessor 245," such that "movement of the robot 11 over the cleaning surface can be based at least in part on the detection of debris and/or an obstacle by the camera 1190." *Id.*, ¶[0204]. For example, "the microprocessor 245 can process the signal from the

camera 1190 to recognize debris on the cleaning surface and maneuver the robot 11 toward the debris." *Id.*

109. Schnittman is analogous art to the challenged patents because (1) it is from the same field of endeavor as the challenged patents, and (2) it is reasonably pertinent to the problem faced by the inventors of the challenged patents. *First*, the challenged patents and Schnittman are in the same field of endeavor: autonomous cleaning robots. *Compare* EX1005, 1:26-2:36 (automated, robotic cleaners for cleaning surfaces) *with* EX1008, ¶¶[0002]-[0003] ("This application relates to robots, and more particularly to autonomous coverage robots" for "removing debris from a surface."). *Second*, Schnittman is reasonably pertinent to at least one problem purportedly addressed by the '207 Patent: ensuring "that all portions of … pool surfaces are satisfactorily cleaned." EX1005, 1:26-31. Schnittman describes adaptive cleaning based on detected debris: In response to an identification of debris on a surface, Schnittman's autonomous cleaning robot can perform various actions, including altering its path, running spot cleaning patterns, and steering toward the debris. EX1008, Figs. 10A-10B; ¶¶[0024], [0191]-[0203]. This focuses cleaning efforts where they are most necessary and enables better cleaning coverage, thus ensuring satisfactory cleaning of a surface.

110. Schnittman claims priority to the '808 Provisional, filed December 30, 2010. The specification of the '808 Provisional supports at least claim 1 of

Schnittman, and therefore Schnittman is entitled to the December 30, 2010 priority filing date of the '808 Provisional, and is prior art as of that date.

111. I understand from counsel that a later patent enjoys the priority date of the provisional on which it is based so long as the provisional specification contains a written description of the invention in such full, clear, concise, and exact terms, to enable an ordinarily skilled artisan to practice the invention claimed in the later patent or published patent application. Similarly, the written description of the provisional must adequately support the claims of the non-provisional application.

112. As shown in the chart below, Schnittman enjoys the December 30, 2010 priority date of the '808 Provisional because the '808 Provisional fully supports at least claim 1 of Schnittman:

Schnittman (US2012/0169497, EX1008)	**U.S. Provisional Application 61/428,808 (EX1011)**
1[a] A debris monitoring system comprising:	"In one aspect, a debris monitoring system includes a receptacle, a first and a second emitter, and a first receiver." EX1011, ¶[0003].
1[b] a receptacle defining an opening to receive debris into the receptacle, the opening having a top portion and a bottom portion, the top portion above the bottom portion as debris is received into the receptacle;	"In one aspect, a debris monitoring system includes **a receptacle**, a first and a second emitter, and a first receiver. **The receptacle defines an opening to receive debris into the receptacle**." *Id.*, ¶[0003]. "In certain implementations, **the opening has a top portion and a bottom portion, the top portion above the bottom portion as debris is received into the receptacle** …." *Id.*, ¶[0006].
1[c] a first and a second emitter, each arranged to emit	"In one aspect, a debris monitoring system includes a receptacle, **a first and a second emitter**, and a first receiver…. The first and

a signal across at least a portion of the opening; and	second emitter are **each arranged to emit a signal across at least a portion of the opening**." *Id.*, ¶[0003].
1[d] a first receiver proximate to the first emitter to receive reflections of the signal emitted by the first emitter, the first receiver disposed along a top portion of the opening and toward the opening to receive an unreflected portion of the signal emitted by the second emitter across the largest dimension of the opening.	"In one aspect, a debris monitoring system includes a receptacle, a first and a second emitter, and **a first receiver**…. **The first receiver is proximate to the first emitter to receive reflections of the signal emitted by the first emitter**, and the first receiver is **disposed toward the opening to receive an unreflected portion of the signal emitted by the second emitter across at least a portion of the opening**." *Id.*, ¶[0003]. "In some implementations, the first receiver and the second emitter are disposed substantially opposite one another **across the largest dimension of the opening**." *Id.*, ¶[0005]. "In certain implementations, the opening has a top portion and a bottom portion, the top portion above the bottom portion as debris is received into the receptacle, **and the first and second emitters and the first receiver each disposed toward a top portion of the opening, with the first receiver disposed above the first and second emitters**." *Id.*, ¶[0006]. "The debris monitoring system of claim 21 wherein the opening has a top portion and a bottom portion, the top portion above the bottom portion as debris is received into the receptacle, and the first and second emitters and **the first receiver each disposed toward a top portion of the opening**, with the first receiver disposed above the first and second emitters." *Id.*, claim 24.

113. Additionally, I have confirmed that the '808 provisional application describes the subject matter that Petitioner relies upon as prior art in the Schnittman

publication. Exhibit 1012 is a redline comparison showing the textual differences between the ’808 provisional and Schnittman. In this redline, text appearing in blue and underlined reflects material that is present in Schnittman but does not appear in the ’808 provisional, while unmarked text reflects material common to both documents. Additionally, the Petition-cited passages of Schnittman have been highlighted in yellow within the redline. As shown in Exhibit 1012, none of the Petition-cited passages of Schnittman appear as blue, underlined text. Instead, each highlighted passage appears in the unmarked body text of the redline, demonstrating that every portion of Schnittman’s text relied upon in the Petition is present verbatim or in substance in the ’808 provisional. Additionally, all of the figures of Schnittman cited in the Petition (*i.e.*, Figs. 1A, 1B, 1C, 2, 3C, 10A, 10B, 11, 14D) are present in the ’808 provisional.

C. Benzler

114. Benzler, EX1013, entitled “Activation System for a Robotic Vehicle,” was filed on May 16, 2008 as PCT/EP08/56016, and published on Nov. 25, 2010 as US Patent Pub. No. 20100299016. EX1013, (10), (22), (43), (86). Benzler is therefore prior art under at least pre-AIA 35 U.S.C. §§ 102(a), (b), and (e).

115. Benzler describes “an activation system (1) for a robotic vehicle (2)” that uses image-based navigation to autonomously control movement of the vehicle (2) within a work area 3. *Id.*, ¶[0037]. The system includes at least one “camera (8)

configured for generating image data of a work area (3)" and a "logic unit (10) configured for determining the position of the at least one robotic vehicle (2) based on the image data generated by the camera (8)." *Id*., Abstract.

116. "The logic unit 10 calculates driving instructions for the robotic vehicle 2 based on the image data," and the driving instructions are transmitted to the robotic vehicle 2 for execution. *Id.*, ¶¶[0044]-[0046]. Benzler further describes that the "logic unit automatically calculates a trajectory for the robotic vehicle based on the image data" "in such a way that the entire work area or a … pre-defined section of the work area is at least almost completely driven along." *Id*., ¶[0024]. In a "particularly advantageous" embodiment, "the logic unit detects differently conditioned sections of the work area . . . based on the image data and then considers this information when calculating the driving instructions, in particular in such a way that the robotic vehicle does only or preferably move[s] on one of those [differently conditioned] sections[.]" *Id.*, ¶[0016].

117. Benzler describes several example embodiments of the activation system, such as "a snow cleaning vehicle, [a] leaf collecting vehicle, [a] grass collecting vehicle, thatching vehicle, or [a] weeding vehicle …[and] as a lawnmower." *Id*., ¶[0023].

118. In a "particularly preferred" embodiment, "the robotic vehicle is [constructed] as [a] pool-robotic vehicle, thus in particular as [a] filter vehicle and/or

cleaning or purifying vehicle … [that] drive[s] in particular on the bottom of a pool, which then creates the work area." *Id.*, ¶[0028]. In this underwater embodiment, "[t]he external border 4 of the work area 3 is created by the surrounding pool walls." Figure 3 illustrates a schematic of the activation system construed as a pool robotic vehicle 2 (*id.*, ¶¶[0036], [0051]-[0056]):

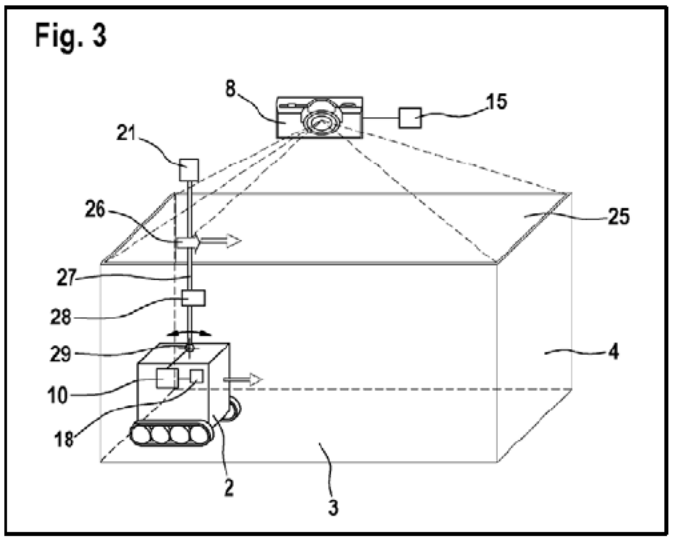

Id., Fig. 3.

119. Benzler discloses a camera 8 for guiding the pool cleaning implementation of robotic vehicle 2. *Id.*, ¶[0053]. The camera 8 transmits data via the logic unit 10 to the control unit 18, "which controls the not shown drive means" for driving the pool cleaning vehicle 2. *Id.*, ¶[0054]. In the pool-cleaning context, the camera 8 may capture a "differently conditioned" portion of the submerged pool surface, such as a cleaned or not cleaned portion of the surface, and control the position of the vehicle 2 accordingly. *Id.*, ¶[0016].

D. Hui

120. Hui, EX1019, entitled "Pool Cleaning Vehicle Having Structure for Cleaning and Sanitizing Pool Water," was filed on Nov. 18, 2008 as U.S. Patent Application No. 12/272,908., and published on June 16, 2011 as U.S. Patent Pub. No. 20110139727. EX1019, (10), (21), (22), (43), (54). Hui is therefore prior art under at least pre-AIA 35 U.S.C. §§ 102(a) and (e).

121. Hui discloses an automated pool cleaning vehicle "which includes the ability for cleaning and sanitizing pool water." EX1019, Abstract, ¶[0001]. In Hui, the cleaning function is achieved through "a filter bag, which traps dirt and debris and prevents its return to the pool water," while the sanitizing function is achieved through "a chemical dispenser [30] for adding chemicals to pool water." *Id*., ¶[0012]. The chemical dispenser has "a hollow interior suitable for storing chemicals for sanitizing pool water," and is configured to release the chemicals, such as chlorine, as water passes through it. *Id*., Abstract, ¶¶[0006], [0022], [0041]. Hui further teaches that the chemical dispenser may be within the housing, as shown in Figure 2, or connected externally to the housing, as shown in Figures 8 and 9:

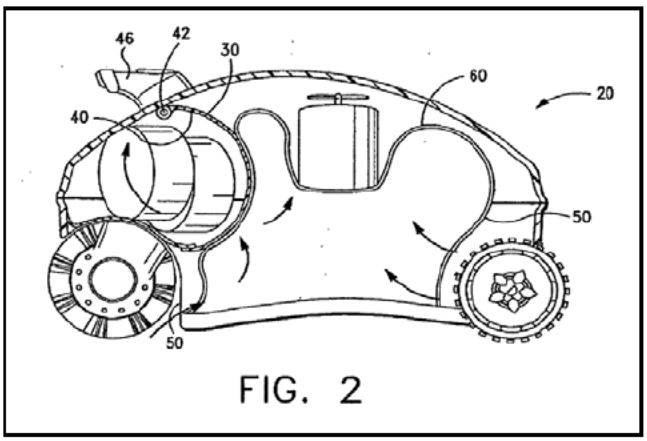

FIG. 2

Id., Fig. 2.

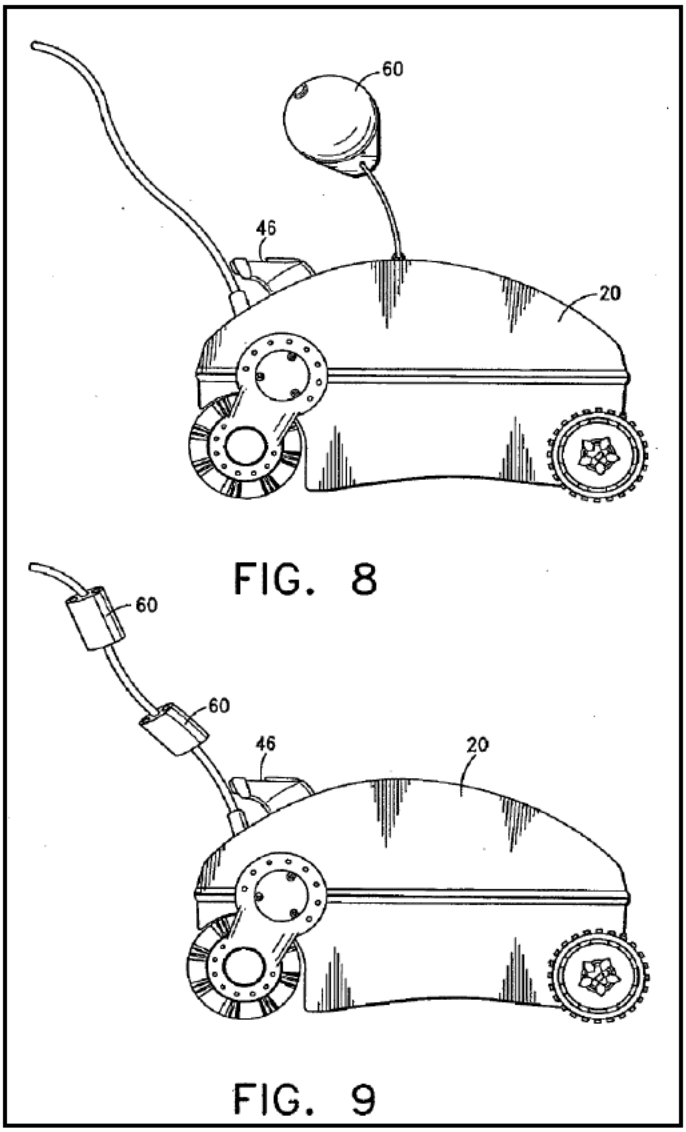

FIG. 8

FIG. 9

Id., Figs. 8-9, ¶[0053] (showing "chemical packet inside the container [60]").

122. In the embodiment shown in Figure 2, the chemical dispenser member 30 is placed within a compartment 40 of the swimming pool vehicle 20. *Id*., ¶¶[0042]-[0043]. The chemical dispenser 30 contains chemical packets 32 whose seal dissolves upon contact with water, allowing the chemical content to mix with the passing water. *Id*., ¶¶[0022], [0039]-[0040], [0047]. The chemical dispenser 30 is downstream of the filter bag 60 such that water entering through inlets 50 first passes through the filter bag 60, where dirt and debris are trapped, and then continues to the chemical dispenser 30, where the filtered water mixes with the chemicals. *Id*., ¶¶[0046], [0050]-[0051]. Thus, the water exiting through the outlet of compartment 40 is both free of debris, as well as sanitized. *Id*., ¶[0052]. In this way, Hui's pool cleaning vehicle performs both mechanical filtration and chemical sanitization, with the chemical dispenser 30 being placed "on, in, or carried by" the vehicle body.

E. Bailey

123. Bailey, EX1018, entitled "User-assisted Robot Navigation System," was filed on July 14, 2009 as U.S. Patent Application No. 12/502,699, and published on Jan. 29, 2013 as U.S. Patent No. 8,364,309 B1. EX1018, (10), (21), (22), (45), (54). Bailey is therefore prior art under at least pre-AIA 35 U.S.C. § 102(e).

124. Bailey describes a mobile robot 102, such as a room cleaning robot or a pool cleaning robot, that autonomously navigates within a space to perform

cleaning tasks, while also allowing user interaction and control through a remote management station 112. EX1018, 1:29-32, 3:46-49, 6:3-7:51, 17:26-29, claim 1. The robot 102 includes a control engine 300 that is an onboard processor implemented as "microprocessors, central processing units (CPUs), or programmable logic devices" "configured to execute computer code or instructions stored in a memory." *Id.*, 4:40-42, 5:31-39. The control engine 300 interfaces with the robot's "sensors, motors, communication facility, and other components of the robot, such that the robot control engine can receive data from the sensors, control the motors, and communicate with the management station 112." *Id.*, 5:19-24.

XI. ANALYSIS OF THE '191 PATENT

A. Ground 1a: Fu Anticipates Claims 1-3

125. In my opinion, as set forth below, claims 1-3 of the '191 patent are unpatentable as being anticipated by Fu.

1. Independent Claim 1

126. In my opinion, as set forth below, claim 1 of the '191 patent is unpatentable as being anticipated by Fu.

a. Preamble: "A self-propelled pool cleaner for cleaning debris from a submerged surface of a swimming pool, comprising:"

127. The preamble of claim 1 is disclosed by Fu. Fu discloses "an underwater cleaning robot" designed "for the underwater cleaning of swimming pool

floors and walls." EX1007, Abstract. An example of Fu's underwater cleaning robot is depicted in Figure 1:

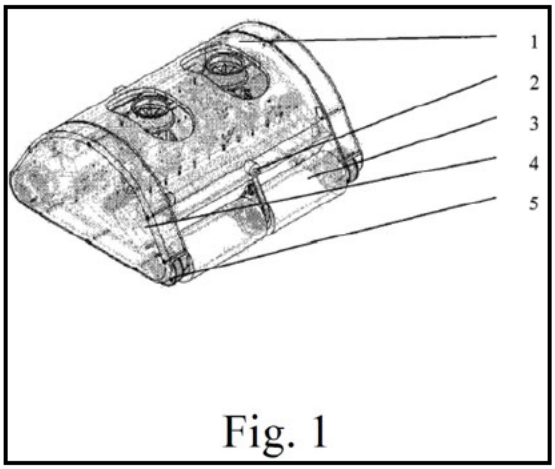

Id., Fig. 1.

128. Fu's robot includes, among other components, "a drainage mechanism [and] a cleaning and mobility platform." *Id.*, ¶[0024]. The cleaning and mobility platform enables the robot to move around the pool and remove debris from its surfaces, *e.g.*, using brushes. *Id.*, ¶¶[0010], [0024]-[0026] ("brush-cleaning"). The drainage mechanism "draws pool water from the bottom of the robot" such that the "water passes through the water flow filter screen 23, which filters out debris, and the clean water is then discharged." *Id.*, ¶[0026]. Thus, Fu's underwater cleaning robot is a "pool cleaner for cleaning debris from a submerged surface of a swimming pool."

129. Fu further discloses that its robot is self-propelled. Fu's cleaning and mobility platform comprises "four independent cleaning driving wheels 3" that "are

controlled by their respective motor drivers, allowing for independent movement." *Id*., ¶[0026]. In the autonomous mode, "control signals are generated by the central processor, which autonomously plans paths and actions … to drive the robot's execution layer and complete the underwater cleaning task." *Id*., ¶[0025]. The execution layer comprises the motor drivers and the cleaning driving wheel DC motors 7, which drive the cleaning driving wheels 3. *Id*., ¶[0024]. Fu's robot is thus "self-propelled" because it moves without external propulsion. Fu also describes various components for powering such movement, including an onboard "rechargeable battery box." *Id.*, ¶¶[0007], [0008], [0024], [0025].

130. For at least these reasons, Fu discloses the claimed "self-propelled pool cleaner [*i.e.*, Fu's underwater cleaning robot] for cleaning debris from a submerged surface of a swimming pool."

b. Element 1a: "a vehicle body;"

131. Fu discloses element 1a of claim 1. As shown in Figure 1, Fu illustrates the "[o]verall schematic diagram of the underwater cleaning robot," which includes "1 - robot housing body" (EX1007, ¶[0014]):

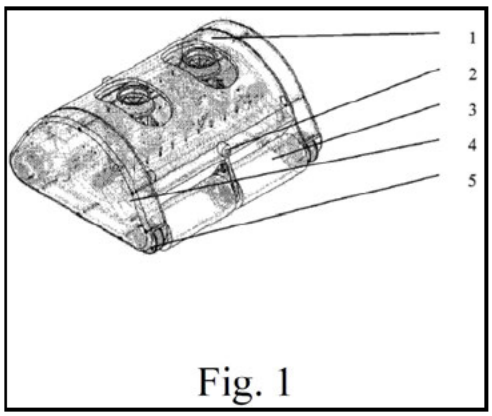

Fig. 1

Id., Fig. 1.

132. Fu further specifies that the "housing body 1 comprises a robot top cover 18, robot side walls 20, and a robot main housing body 19." *Id*., ¶[0024].

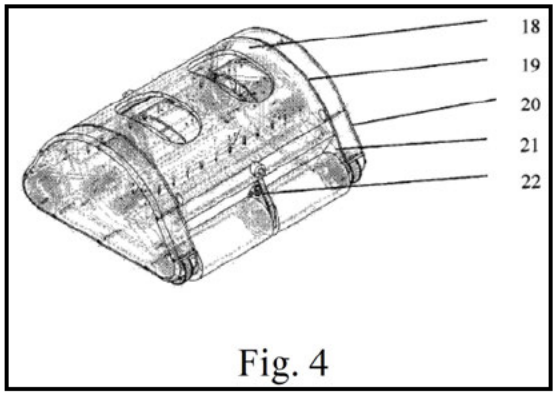

Fig. 4

Id., Fig. 4.

133. Accordingly, Fu discloses the claimed "vehicle body [*i.e.*, Fu's robot housing body 1]."

c. Element 1b: "means for moving the vehicle body within the swimming pool;"

134. Fu discloses element 1b of claim 1. As explained in Section VIII above, "means for moving the vehicle body within the swimming pool" is an MPF term,

and the corresponding structures disclosed in the '191 Patent include "wheels, rollers, tracks or other surface contacting members powered by a motor and the like." EX1001, 3:31-43.

135. Fu discloses "moving the vehicle body" and a corresponding structure described in the '191 Patent. Specifically, Fu's robot comprises a cleaning and mobility platform that enables controlled movement of the robot body. EX1007, ¶[0024]. The cleaning and mobility platform, illustrated in Figure 1 reproduced above, comprises "a robot housing body 1, cleaning driving wheels 3, synchronous belt gears 5, and a driving synchronous belt 4." *Id.* A driving DC motor 7 drives the cleaning driving wheels 3 via the synchronous belt gears 5 and the driving synchronous belt 4. *Id.*, ¶¶[0007],[0024] ("Said cleaning driving wheel DC motors [7] are equipped with reduction gearboxes and encoders. They are installed and fixed via front flanges to the side wall of the driving and control sealed housing and the side wall of the robot main housing body [19], and they drive the cleaning driving wheels [3] via synchronous belt gears [5] and synchronous belts [4].").

136. Further, the cleaning driving wheels 3 "are controlled by their respective motor drivers, allowing for independent movement." *Id.*, ¶[0026], Fig. 1. "By using different combinations of wheel speeds, the robot can perform tasks such as moving forward, backward, turning, and brush-cleaning." *Id*, ¶[0026]. Fu thus discloses the claimed function ("moving the vehicle body within the swimming

pool"), and Fu's driving wheels 3 powered by cleaning driving wheel DC motors 7 disclose a corresponding structure described in the '191 Patent for performing this function.

137. In sum, Fu teaches the claimed "means for moving the vehicle body within the swimming pool [*i.e.*, Fu's driving wheels 3 powered by cleaning driving wheel DC motors 7]."

d. Element 1c: "a filter configured to retain debris collected from the submerged surface;"

138. Fu discloses element 1c of claim 1. Fu's underwater cleaning robot includes a "drainage mechanism" that is designed to draw in pool water, filter out debris from the water, and discharge the filtered water while retaining the debris. EX1007, ¶¶[0024]-[0026]. An example schematic of the drainage mechanism is illustrated in Figures 3 and 5:

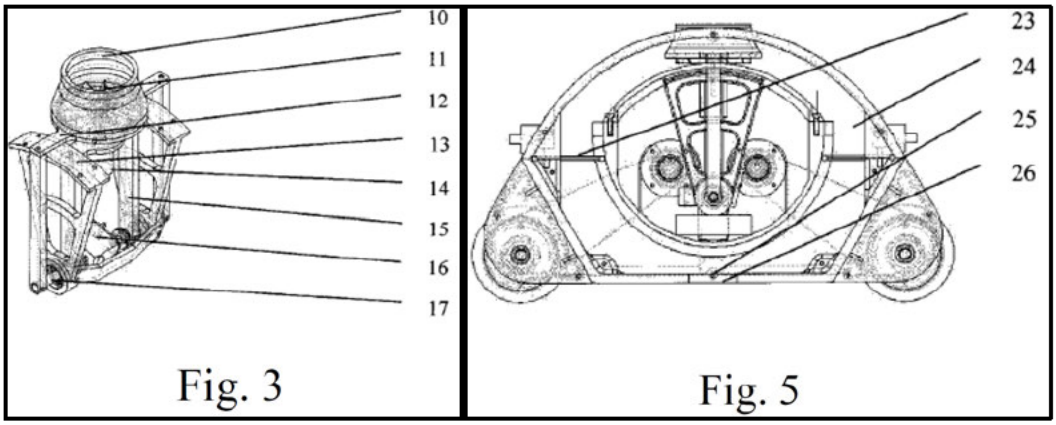

Id., Fig. 3 (water discharger), Fig. 5.

139. The drainage mechanism "comprises a water discharger, a water flow channel 24 …, a water flow filter screen 23, and a water inlet [26] with an anti-backflow device 25." *Id*, ¶[0024]. During operation, "the drainage propeller high-speed DC motor 14 … drives the drainage propeller 11 to rotate … expel[ling] water from within the robot's water flow channel 24, creating a high negative pressure inside." *Id.*, ¶[0026]. This negative pressure "draws pool water from the bottom of the robot into the water flow channel 24 through the water inlet [26]." *Id*. Once in the flow channel 24, the "water passes through the water flow filter screen 23, which filters out debris, and the clean water is then discharged." *Id*.

140. Fu further makes clear that the drainage mechanism retains the debris that is filtered out from the pool water. "An anti-backflow device 25 is installed above the water inlet 26," which opens "[w]hen water flows in through the inlet," and closes "[w]hen the water flow stops," thus "prevent[ing] debris from flowing out of the water flow channel 24." *Id*. Thus, debris that is filtered out by the filter screen 23 is retained within the water flow channel 24. Fu also describes that "[w]hen the debris [inside the water flow channel 24] reaches a certain density, [the underwater cleaning robot] issues a 'debris full' alarm," further confirming that the drainage mechanism is configured to retain the debris collected from the submerged surface as claimed. *Id*.

141. Thus, Fu discloses "a filter [*i.e.*, the filter of Fu's drainage mechanism] configured to retain debris collected from the submerged surface."

e. Element 1d: "at least one camera positioned on or in the body for capturing an image of at least a first portion of the submerged surface; and"

142. Fu discloses element 1d of claim 1. Fu's robot comprises "2 – monitoring camera," as shown in Figure 1 (EX1007, ¶[0014], Fig. 1):

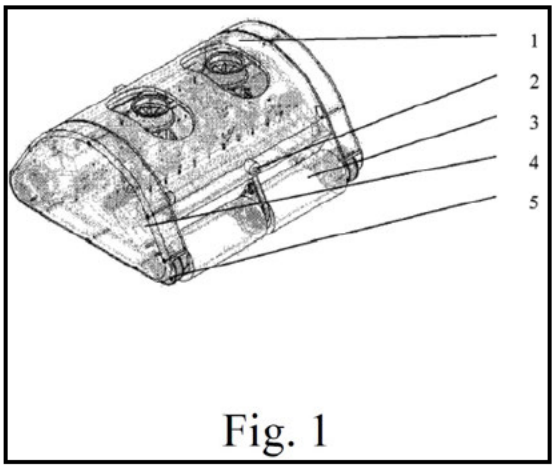

Fig. 1

143. "Said monitoring cameras 2 are installed on the two front panels of the robot main housing body," such that the cameras 2 are "on or in the body," as claimed. *Id.*, ¶[0024]. The robot "uses its monitoring cameras 2 to capture images of the pool floor," which is the submerged surface, as claimed. *Id.*, ¶[0026].

144. Therefore, Fu discloses "at least one camera [*i.e.*, Fu's monitoring cameras 2] positioned on or in the body [*i.e.*, Fu's robot housing body 11] for capturing an image of at least a first portion of the submerged surface."

f. Element 1e: "a controller (i) positioned on or in the body,"

145. Fu discloses element 1e of claim 1. Fu discloses a control system that includes "a central processor, monitoring cameras, an image acquisition card, … motor drivers, a control system box 8, cleaning driving wheel DC motors 7" all of which are encapsulated within a "control system box 8." EX1007, ¶[0024], Fig. 6.

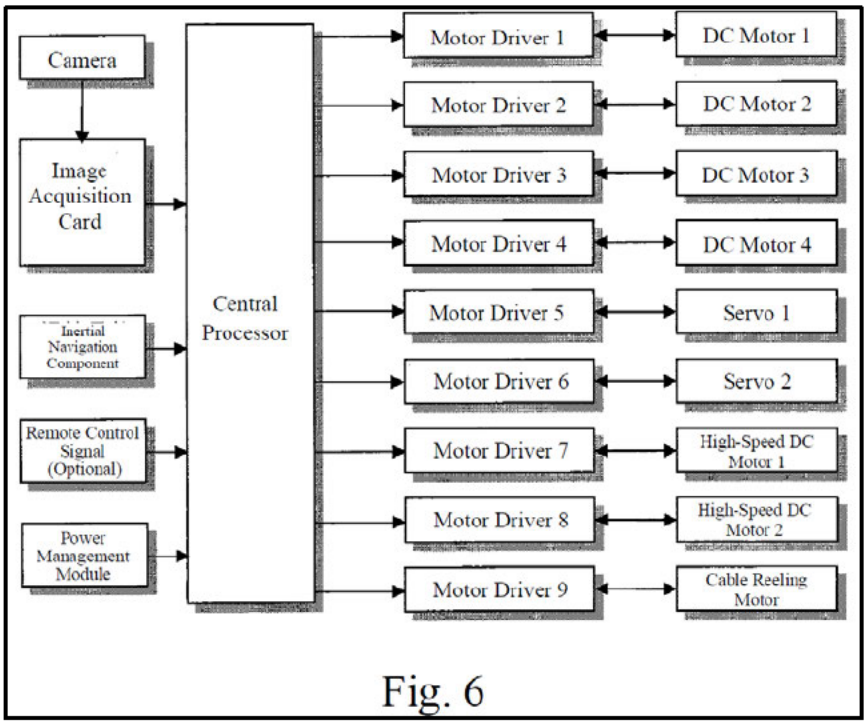

Fig. 6

Id., Fig. 6.

146. The control system box 8 "is fixed to the bottom of the driving and control sealed housing [6]," as shown in Figure 2 below. *Id.*, ¶[0024], Fig. 2.

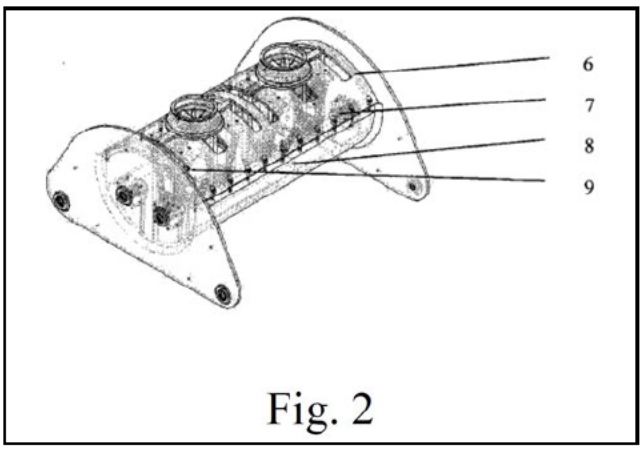

Fig. 2

147. Therefore, Fu's control system, which comprises the central processor that generates control signals for controlling the robot, and is positioned on the driving and control sealed housing 6, teaches "a controller" that is "positioned on or in the body." *Id.*, ¶[0026].

g. Element 1f: "[the controller] (ii) in electronic communication with the at least one camera,"

148. Fu discloses element 1f of claim 1. As seen in Figure 6 (reproduced above for preceding element 1e), "the monitoring cameras (2) are connected to the central processor via the image acquisition card." EX1007, Fig. 6, claim 1. The image acquisition card serves as an electronic interface that transmits an image from the monitoring cameras 2 to the central processor of the control system for processing, such that the controller [*i.e.*, Fu's control system] is "in electronic communication with the at least one camera [*i.e.*, Fu's monitoring cameras 2]," as claimed.

h. Element 1g: "[the controller] (iii) configured to generate, in response to the captured image, at least one control signal to cause movement of the body within the swimming pool to, or away from, the first portion of the submerged surface."

149. Fu discloses element 1g of claim 1. Fu explains that "[t]he monitoring cameras 2 and the image acquisition card constitute the environmental perception layer of the control system." EX1007, ¶[0024]. "[I]nformation from the environmental perception layer" is expressly identified as the basis upon which "control signals are generated by the central processor … to drive the robot[]" in the autonomous mode. *Id.*, ¶[0025].

150. Fu further describes its control architecture in which the image acquisition card comprises the control system's input, and the motor drivers that drive the cleaning driving wheels 3 comprise the output. *Id.*, ¶[0007]. As shown in Figure 6, the image acquisition card transmits the image captured by the cameras 2 to the central processor. *Id.*, Fig. 6, claim 1. Based on the captured image, "control signals are generated by the central processor, which autonomously plans paths and actions … to drive the robot's execution layer [*i.e.*, the motor drivers] and complete the underwater cleaning task." *Id.*, ¶[0025] ("In said autonomous mode, control signals are generated by the central processor, which autonomously plans paths and actions based on information from the environmental perception layer [i..e., monitoring cameras 2 and the image acquisition card] and its own attitude and

positioning layer, in conjunction with a preset cleaning task, to drive the robot's execution layer and complete the underwater cleaning task."). In other words, the central processor receives the captured image from the cameras 2 and generates control signals based on the captured image to instruct the motor drivers on how to move the robot.

151. Fu further describes how its central processor uses the captured image to generate control signals for moving the robot:

> During the autonomous cleaning process, a pool cleanliness image threshold is set. The robot uses its monitoring cameras 2 to capture images of the pool floor and compares them with the threshold to determine the level of cleanliness. It then plans its cleaning movements and adjusts the working state of the four cleaning driving wheels 3 and the water discharger to complete the cleaning task. Specifically, the speed of each wheel 3 can be adjusted. By using different combinations of wheel speeds, cleaning actions of varying intensity can be achieved. For example, if the front wheels rotate quickly clockwise and the rear wheels rotate slowly counter-clockwise, the underwater cleaning robot will advance in the direction determined by the clockwise rotation of the front wheels.

EX1007, ¶[0026].

152. Fu also explains that "[b]y using different combinations of wheel speeds, the robot can perform tasks such as moving forward, backward, [and] turning," thus confirming that the generated signals cause the robot to move "to, or away from" a pictured region based on the cleanliness determination. *Id.*

153. In sum, Fu's central processor uses the captured image by the monitoring cameras 2 to assess the "level of cleanliness" of the pictured region of the pool as compared against a "pool cleanliness image threshold." *Id.* Based on that assessment, the central processor "plans its cleaning movements and adjusts the working state of the four cleaning driving wheels 3" to "perform tasks such as moving forward, backward, [and] turning." *Id.* Fu thus discloses the claimed controller "configured to generate, in response to the captured image, at least one control signal to cause movement of the body within the swimming pool to, or away from, the first portion of the submerged surface."

154. A POSA would have recognized that any robot movement would necessarily be "to, or away from, the first portion" captured by Fu's monitoring cameras 2. Further, because the central processor generates control signals in response to the cleanliness level of a particular pictured region, and those control signals drive movement in "forward, backward, [or] turning" directions, a POSA would have understood that the controller directs the robot toward regions assessed as falling below the "pool cleanliness image threshold" and away from regions assessed as falling above.

155. Fu's central processor (*i.e.*, controller) is clearly generating a control signal that is causing movement of the underwater cleaning robot to perform a cleaning operation on a submerged surface of the pool. Common sense dictates that

the underwater cleaning robot (*i.e.*, vehicle body) must necessarily be moving to the portion of the pool that failed to meet the cleanliness image threshold. This claim limitation requires, "movement of the body within the swimming pool to, or away from, the first portion of the submerged surface." My understanding is that the phrase "to, or away from" in this limitation can be met (and thus anticipated by) a device that moves either "to" or "away" from the submerged surface. Since Fu at a minimum teaches motion "to" a portion of the surface in need of cleaning, it anticipates this limitation,

156. A POSA would also understand Fu to teach movement of the body "to or away from, the first portion of the submerged surface." As noted above, Fu captures an image of the pool floor and compares it with the threshold to determine the level of cleanliness. It then plans its cleaning movements and adjusts the working state of the four cleaning driving wheels. This will necessarily cause movement to or away from the imaged portion of the pool floor (the claimed submerged surface).

157. Fu anticipates claim 1.

2. Independent Claim 2

158. Claim 2 of the '191 Patent is anticipated by Fu for the reasons explained above for claim 1. Claim 2 recites limitations of claim 1, but claim 2 is broader because it removes a restriction on the claimed "filter": Whereas claim 1 requires the filter to be a part of a "self-propelled pool cleaner," claim 2 "allows for the

possibility of the debris filter being remote from the vehicle body, hence referring to a 'system' including both the cleaning vehicle and the debris filter" (EX1002, 42):

> A ~~self-propelled pool cleaner~~system for cleaning debris from a submerged surface of a swimming pool, comprising:
>
> a. a self-propelled pool cleaner comprising:
>
> ~~a~~i. a vehicle body;
>
> ~~b~~ii. means for moving the vehicle body within the swimming pool;
>
> ~~c. a filter configured to retain debris collected from the submerged surface;~~
>
> ~~d~~iii. at least one camera positioned on or in the body for capturing an image of at least a first portion of the submerged surface; and
>
> ~~e~~iv. a controller (i) positioned on or in the body, (ii) in electronic communication with the at least one camera, and (iii) configured to generate, in response to the captured image, at least one control signal to cause movement of the body within the swimming pool to, or away from, the first portion of the submerged surface~~.~~; and
>
> b. a filter configured to retain debris collected from the submerged surface by the self-propelled pool cleaner.

159. Because Fu anticipates the narrower claim 1 requiring the filter to be part of the pool cleaner, Fu likewise anticipates the broader claim 2 eliminating this requirement. Further, I understand that during prosecution, Applicant recognized that claim 2 does not *require* the filter to be separate from the pool cleaner; it just encompasses this "*possibility*." *Id*. Indeed, claim 2 includes no limitations

forbidding the inclusion of the filter on the pool cleaner. Thus, Fu's pool cleaner with onboard filter anticipates the "system for cleaning debris" of claim 2.

3. Independent Claim 3

160. Claim 3 of the '191 Patent is anticipated by Fu for the reasons explained above for claim 1. Claim 3 recites limitations of claim 1, but claim 3 is broader because it removes the requirement that the claimed "controller" be "positioned on or in the body" of the self-propelled pool cleaner:

> A ~~self-propelled pool cleaner~~system for cleaning debris from a submerged surface of a swimming pool, comprising:
>
> a. a self-propelled pool cleaner comprising:
>
> ~~a~~i. a vehicle body;
>
> ~~b~~ii. means for moving the vehicle body within the swimming pool;
>
> ~~c~~iii. a filter configured to retain debris collected from the submerged surface; and
>
> ~~d~~iv. at least one camera positioned on or in the body for capturing an image of at least a first portion of the submerged surface; and
>
> ~~e~~b. a controller (i) ~~positioned on or in the body, (ii)~~ in electronic communication with the at least one camera~~,~~ and (~~iii~~ii) configured to generate, in response to the captured image, at least one control signal to cause movement of the body within the swimming pool to, or away from, the first portion of the submerged surface.

161. Because Fu anticipates the narrower claim 1 requiring the controller to be positioned on or in the body of the pool cleaner, Fu likewise anticipates the broader claim 3 eliminating this requirement. Further, as Applicant recognized

during prosecution, claim 3 does not *require* the controller to be separate from the body of the pool cleaner, but it encompasses this *possibility*. EX1002, 42-43 (claim 3 "referenc[es] a 'system' including both the cleaning vehicle and a controller that could be remote from the vehicle body"). Claim 3 includes no limitations forbidding the controller from being positioned on or in the body of the pool cleaner. Thus, Fu's pool cleaner with onboard controller anticipates the "system for cleaning debris" of claim 3.

B. Ground 1b: Claims 1-3 Would Have Been Obvious Over Fu

162. In my opinion, as set forth below, claims 1-3 of the '191 patent are unpatentable as obvious over Fu.

163. Fu anticipates claims 1-3 of the '191 patent. *See* Ground 1a above. However, should the Board find that Fu does not anticipate claims 1-3 because it allegedly lacks a control signal that causes movement of the vehicle body "to, or away from, the first portion of the submerged surface,"[10] Fu nevertheless would have rendered obvious these claims.

---

[10] As explained in Section XI.A.1.h., such a finding would be erroneous because claims 1-3 encompass any control signal generated in response to a captured image that causes movement of the vehicle body: Once the camera captures an image of a portion of the submerged surface, the vehicle occupies some finite position relative to that portion. *Any* movement commanded by the control signal—whether forward, backward, laterally, vertically, or along any trajectory—will necessarily decrease or increase the distance between the vehicle body and that imaged portion, *i.e.*, it will be movement "to, or away from" that portion. Because Fu discloses the generation of a control signal in response to the captured image that

164. A POSA would have found it obvious to implement motion control in Fu to direct the cleaning robot toward image-identified dirty regions (*i.e.*, regions below Fu's cleanliness threshold) and away from clean regions (*i.e.*, regions above the threshold).

165. Fu already teaches acquiring an image of submerged pool surfaces (EX1007, ¶[0026]), comparing the image to a cleanliness image threshold (*id.*), and "plan[ning] … cleaning movements" and "adjust[ing] the working state of the four cleaning drive wheels 3 … to complete the cleaning task" based on this comparison (*id.*). Once Fu's system distinguishes areas as sub-threshold versus above-threshold, using that information to guide the robot's movement towards dirtier areas and away from cleaner areas would have been a routine, predictable application that would have been obvious to a POSA.

166. A POSA would have been motivated to implement Fu's pool-cleaning robot such that it moves toward dirtier (sub-threshold) regions and away from cleaner (above-threshold) regions because this would improve cleaning efficiency and task completion time. The resulting behavior—spending more time in dirtier areas and less in cleaner areas—would have been the expected and desirable outcome of applying Fu's thresholded cleanliness information to motion control.

---

causes movement of the vehicle body, it necessarily discloses element 1g and the corresponding features of claims 2 and 3.

Implementing this control behavior in Fu would have required no more than common sense and routine changes to the software configuration within a POSA's skill. Such implementation would reflect only routine, predictable applications of well-known control techniques, requiring no new hardware and instead leveraging Fu's disclosed central processor. A POSA would have thus had a reasonable expectation of success in implementing Fu with the claimed "at least one control signal to cause movement of the body within the swimming pool to, or away from, the first portion of the submerged surface."

167. Accordingly, even if Fu were found not to anticipate, it would have rendered obvious claims 1-3 for at least these reasons.

C. Ground 1c: Claims 1-3 Would Have Been Obvious Over Fu In View of Benzler

168. In my opinion, as set forth below, claims 1-3 of the '191 patent are unpatentable as obvious over Fu in view of Benzler.

169. If the Board determines that Fu alone does not anticipate or render obvious the claimed "at least one control signal to cause movement of the body within the swimming pool to, or away from, the first portion of the submerged surface," claims 1-3 are nonetheless obvious over Fu in combination with Benzler.

170. A POSA would have been motivated to combine Fu and Benzler to yield the claimed control signal for causing movement "to, or away from" a portion of the submerged surface captured by the camera. As detailed in Section XI.A.1.h

above, Fu discloses capturing an image, comparing them to a cleanliness threshold to determine a level of cleanliness, and then planning movement and adjusting the working state of a robot's drive wheels to complete a cleaning task. EX1007, ¶[0026]. Benzler, like Fu, describes an autonomous robotic cleaning system that makes movement and cleaning decisions based on an image of the cleaning surface or work area, including "differently conditioned" sections of the work area. EX1013, Abstract, ¶¶[0016], [0018], [0028], [0037], [0044]-[0046], [0053]. In particular, Benzler describes an activation system for a robotic vehicle 2 that includes (i) a digital camera 8 for capturing image data of the work area, and (ii) a logic unit 10 that evaluates the image data to generate driving instructions for the robotic vehicle 2. *Id.*, Abstract.

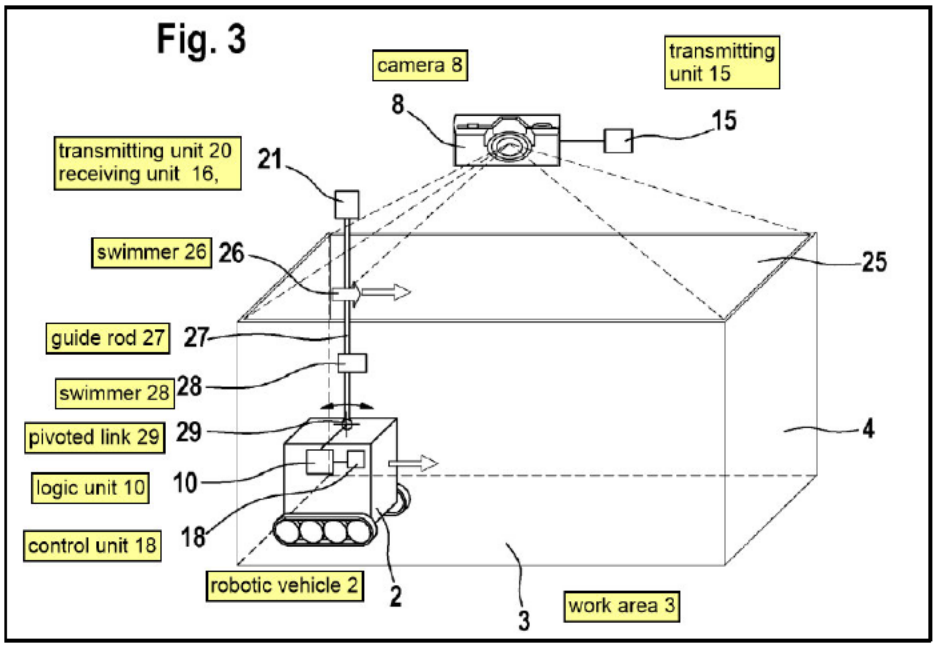

Id., Fig. 3 (annotated).

171. In a "particularly preferred" embodiment, Benzler's robotic vehicle is a "pool-robotic vehicle … in particular as a filter vehicle and/or cleaning or purifying vehicle," which drives on the bottom of a pool to perform its cleaning function. *Id*., ¶[0028]. Benzler further explains that "the internal or external logic unit automatically calculates a trajectory for the robotic vehicle based on the image data that is in particular continuously determined by the external camera." *Id*., ¶[0024]. These disclosures confirm that Benzler, like Fu, is directed to an autonomous robotic cleaner that uses image-derived information to guide its movement and cleaning, and in particular, includes an embodiment where the cleaning is performed in a pool environment using camera-based navigation. The similar disclosures of Fu and Benzler would have motivated a POSA to consider these references together.

172. Benzler further describes embodiments in which the robotic vehicle is implemented as an autonomous lawnmower, a snow cleaning vehicle, a gas collecting vehicle, a thatching vehicle, a weeding vehicle, etc. *Id.*, ¶[0023]. In the autonomous lawnmower embodiment, for instance, "the logic unit … is … construed in such a way that differently conditioned sections (mowed/not mowed) … are detected and the driving instructions are calculated in such a way that preferably the mowed section … is driven along." *Id.*, ¶¶[0018], [0045].

173. Benzler also discloses that in embodiments, "the logic unit detects differently conditioned sections of the work area, for example a mowed or a not

mowed section of the work area based on the image data and then considers this information when calculating the driving instructions, in particular in such a way that the robotic vehicle does only or preferably move on one of those sections, in particular the not mowed lawn section." *Id.*, ¶[0016]. Thus, Benzler uses image-based classification of differently conditioned sections to cause motion "only or preferably" toward target sections and away from non-target sections. *Id.*, ¶¶[0016], [0018], [0045].

174. A POSA would have been motivated to incorporate Benzler's classification-driven motion control into Fu because it is a known technique for improving coverage efficiency and cleaning performance, satisfies design needs to prioritize dirty areas and reduce redundant cleaning, and represents one of a finite, predictable set of control options once regions are classified with respect to a threshold. Applying Benzler's classification-driven motion to Fu's thresholded cleanliness determinations would have yielded the claimed control signal for causing movement "to, or away from" a portion of the submerged surface captured by the camera, with the robot moving toward sub-threshold (dirtier) regions and away from above-threshold (cleaner) regions.

175. A POSA would also have had a reasonable expectation of success. The combination does not require new hardware or unconventional algorithms; Fu already discloses the cameras, processor, and wheels, and it "plans" movement and

"adjusts" wheel states based on cleanliness determinations. Implementing Benzler's classification-based movement entails routine software modifications that would have been within a POSA's skill.

176. In sum, even if Fu alone were deemed insufficient, the combination of Fu with Benzler renders obvious the "to, or away from" control-signal limitation of claims 1-3 by teaching and motivating the use of image-based region classification to control motion toward target (dirtier) regions and away from non-target (cleaner) regions, with a reasonable expectation of success.

D. Ground 2: Claims 1-3 Would Have Been Obvious Over Schnittman In View of Benzler

177. In my opinion, as set forth below, claims 1-3 of the '191 patent are unpatentable as obvious over Schnittman in view of Benzler.

1. Schnittman Is Prior Art As Of December 30, 2010

178. Schnittman, EX1008, entitled "Debris Monitoring," was filed December 30, 2011, and published July 5, 2012. EX1008, (22), (43). Schnittman incorporates by reference and claims priority to U.S. Provisional Application No. 61/428,808 (the "'808 provisional"), filed December 30, 2010. *Id*., (60). Schnittman is prior art under at least pre-AIA 35 U.S.C. §§ 102(a) and (e). *See* Section X.B above.

2. Motivations to Combine

179. A POSA designing a pool-cleaning robot at the time of the alleged invention would have looked to automated cleaning robot literature such a Schnittman. Schnittman discloses an autonomous cleaning robot 11 with movement and cleaning decisions tied to an image received from a debris sensor, including embodiments where the debris sensor is a camera 1190. EX1008, Abstract, ¶¶[0002], [0004]-[0006], [0045], [0204]. The image may include "detection of debris and/or an obstacle by the camera 1190." *Id.*, ¶[0204]. Schnittman explains that the camera 1190 is in communication with a microprocessor 245, such that movement of the robot 11 over the cleaning surface is based on this image, for *e.g.*, "to avoid obstacles and/or debris large than a specific size," or "to recognize debris on the cleaning surface and maneuver the robot 11 toward the debris." *Id.*

180. Importantly, Schnittman is not limited to any specific environment; its teachings apply generally to cleaning robots that navigate and make cleaning decisions based on an image of the surface being cleaned. POSA designing a pool-cleaning robot would have recognized that Schnittman's teachings and stated advantages (*e.g.*, robust, debris-responsive cleaning coverage) could be advantageously leveraged in a pool-cleaning context. I note that the inventors of the challenged patents did, in fact, look to prior-art references that, like Schnittman, describe cleaning robots without explicitly mentioning underwater cleaning of a pool

or spa. For example, the challenged patents cite U.S. Patent No. 5,613,261 to Kawakami and assigned to Minolta. *See* EX1001, (56); EX1003, (56); EX1005, (56). Like Schnittman, Kawakami does not explicitly disclose a pool cleaner for submerged surfaces, nor does he restrict the application to cleaning surfaces in a particular domain. *See* EX1027. The summary of Kawakami discloses, "A first object of the present invention is to provide a cleaner for rapidly cleaning a predetermined cleaning range by thoroughly cleaning only severely dirty areas." *Id.*, 1:30-32. Also, "[t]he aforesaid first object of the cleaner of the present invention is achieved by a cleaner provided with a sensor for detecting the degree of dirt of an object being cleaned, and a driving controller for controlling the movement of the cleaner in accordance with the degree of dirt of an object being cleaned." *Id.*, 1:40-45.

181. I also note that the challenged patents describe their alleged inventions at a high level. They do not, for example, provide details or claim inventive aspects related to underwater operations of motors, cameras or electronic equipment. Solutions to these problems would have been known to a POSA well before July, 2012. Describing a well-known system in the context of a swimming pool does not render the teachings of Schnittman less relevant.

182. The POSA designing a pool-cleaning robot at the time of the alleged invention would have also looked to pool-cleaning literature, like Benzler. Benzler,

like Schnittman, describes an autonomous robotic cleaning system that makes movement and cleaning decisions based on an image of the cleaning surface or work area. EX1013, Abstract, ¶¶[0028], [0037], [0044]-[0046], [0053]. In particular, Benzler describes an activation system for a robotic vehicle 2 that includes a digital camera 8 for capturing an image of the work area and a logic unit 10 that evaluates the image to generate driving instructions for the robotic vehicle 2. *Id*., Abstract.

183. In a "particularly preferred" embodiment, the robotic vehicle is a "pool-robotic vehicle … in particular as a filter vehicle and/or cleaning or purifying vehicle," which drives on the bottom of a pool to perform its cleaning function. *Id.*, ¶[0028]. Benzler further explains that "the internal or external logic unit automatically calculates a trajectory for the robotic vehicle based on the image data that is in particular continuously determined by the external camera." *Id.*, ¶[0024]. These disclosures confirm that Benzler, like Schnittman, is directed to an autonomous robotic cleaner that uses image-derived information to guide its movement and cleaning, and in particular, includes an embodiment where the cleaning is performed in a pool environment using camera-based navigation.

184. A POSA would have been motivated to consider Schnittman and Benzler together because they describe similar technology (*e.g.*, autonomous cleaning robots that employ computer vision) and address the same problem: enabling a robot to make cleaning and navigation decisions based on an image of the

cleaning surface. At the time of the '191 Patent, POSAs working in the field of autonomous, image-based cleaning robots, whether for floors, lawns, or pools, were addressing the same core problem: how to use an image to enable a robot to perceive its cleaning surface, and execute cleaning operations autonomously. Both Schnittman and Benzler address that problem, and offer complementary, overlapping teachings that a POSA would have recognized as related.

185. At the time of the alleged invention (July 2012), a POSA would have understood that the robotics principles underlying such image-based cleaners, like those developed by leading cleaning robot manufacturers such as iRobot (assignee of Schnittman), were readily adaptable to different environments and mediums. Robotics, like any other technology, develops by building on existing technology and adapting existing technology to new contexts. POSAs working in the field of autonomous pool cleaners were not working in isolation; they routinely drew on technologies from the broader field of autonomous cleaning robots. Indeed, Benzler itself confirms this: it describes the same image-driven framework as Schnittman, with Benzler applying this framework to both land and water environments.

186. Benzler would have also reinforced a POSA's understanding that Schnittman's cleaning robot could be advantageously adapted for use in a pool-cleaning context. For example, Benzler's teaching of a "moisture-sealed housing" for the internal logic unit (*id.*, ¶[0011]) explicitly contemplates operation in wet

environments, providing a practical implementation detail that a POSA would have readily incorporated when adapting Schnittman's camera-based cleaning robot for underwater use. Likewise, for instance, Benzler's teaching of "pool robotic vehicles [that] drive in particular on the bottom of a pool" using wheels powered by a drive motor (*id.*, ¶¶[0028], [0051], Fig. 3) reinforces that Schnittman's similar motor-powered wheels 45 could be readily adapted for underwater use. Schnittman's image-based debris detection and navigation system, combined with Benzler's known underwater implementation of a similar image-based robotic pool cleaner, would predictably yield an image-based underwater pool cleaner that is driven based on an image of the pool surface.

187. Additionally, Benzler describes other embodiments in which the robotic vehicle is implemented as an autonomous lawnmower, a snow cleaning vehicle, a gas collecting vehicle, a thatching vehicle, a weeding vehicle, etc. *Id.*, ¶[0023]. In the autonomous lawnmower embodiment, for instance, "the logic unit … is … construed in such a way that differently conditioned sections (mowed/not mowed) … are detected and the driving instructions are calculated in such a way that preferably the mowed section … is driven along." *Id.*, ¶¶[0018], [0045]. Like the pool cleaning vehicle embodiment, this embodiment is based on the same image-driven activation system: the camera captures an image of the work area, and the logic unit interprets the captured image to determine how that area is

"conditioned" and where to move next. *Id.*, ¶¶[0016], [0040]-[0045]. By describing the same image-based system across multiple domains, land and water alike, Benzler demonstrates that a POSA understood how to adapt the principles of image-based robotic navigation and cleaning across various environments and mediums.

188. Furthermore, a POSA would have had a reasonable expectation of success in making this combination. By the time of the '191 Patent, the necessary adaptations to render a system water-ready were straightforward and within a POSA's skill, with such adaptations including moisture-sealing or potting electronics, waterproofing housings, ensuring stable mobility and traction along submerged pool surfaces to counter buoyancy and slippage, and applying known image-processing techniques to extract useful information from underwater camera imagery.

189. By July 2012, I had been personally involved in the development of aerial, ground, surface water and underwater autonomous robotic vehicles that used computer vision for vehicle navigation and control. By computer vision, I mean that these vehicles used cameras to capture an image which was then processed in a controller which generated control signals to cause deliberate navigation of the vehicle. While submersed pool cleaning has challenges associated with underwater operation of electronic and mechanical components, methods for solving these

challenges were know at the time of the alleged invention and are not the subject of the challenged patents,

190. For example, in the same period, the use of cameras on underwater vehicles was known (*see, e.g.*, EX1014, EX1015, EX1016), and researchers documented techniques to improve the effectiveness of underwater imaging. Literature from around the time of the '191 Patent described various normalization, filtering, and color-space methods that robustly extract target information from underwater environments in real time. *See* EX1017[11], 7. These developments would have reinforced a skilled artisan's motivation and reasonable expectation of success in adapting Schnittman to Benzler's pool-cleaning context.

191. The SubjuGator 2011 Paper (EX1017) was published by a collegiate team from the University of Florida as part of the requirements of the 14th annual AUVSI RoboSub competition. *Id.* I was also involved in this competition as advisor to a competition team from Embry Riddle. The team I advised also competed in the 14th annual AUVSI RoboSub competition in the summer of 2011 and we also submitted a journal paper like the one submitted by the University of Florida team.

[11] Exhibit 1017 is a true and correct copy of University of Florida's competition paper submission for the 14th annual AUVSI RoboSub competition, downloaded from https://subjugator.org/?page_id=33 on November 5, 2025.

That paper, included as Exhibit 1028[12], was publicly available on the AUVSI RoboNation website for several years, but that website has now been taken down. Based on personal experience, I can say that the issues associated with underwater navigation of a vehicle based on computer vision were known to undergraduate students working in this field by the summer of 2011.

192. Thus, a POSA seeking to develop an autonomous pool-cleaning robot would have been motivated to extend the teachings of Schnittman to the underwater context, with Benzler providing clear guidance and confirmation that such an adaption was both known and would be successful.

3. Independent Claim 1

193. In my opinion, as set forth below, claim 1 of the '191 patent is unpatentable as obvious over Schnittman in view of Benzler.

a. Preamble: "A self-propelled pool cleaner for cleaning debris from a submerged surface of a swimming pool, comprising:"

194. Schnittman in view of Benzler would have rendered obvious the preamble of claim 1. Schnittman discloses autonomous robotic cleaners for

[12] Exhibit 1028 is a true and correct copy of Embry-Riddle Aeronautical University's competition paper submission for the 14th annual AUVSI RoboSub competition, the drafting and submission of which was supervised by me. I have personal knowledge that this paper was publicly available on the AUVSI website around the 2012-2013 timeframe, but this copy is obtained from my personal records.

removing debris from cleaning surfaces (*e.g.*, floors). EX1008, ¶¶[0002], [0023], [0033]. For instance, Figure 14D depicts an exemplary autonomous robotic cleaner 11 and its maintenance station 1250 (*id.*, ¶¶[0097], [0216]-[0217]):

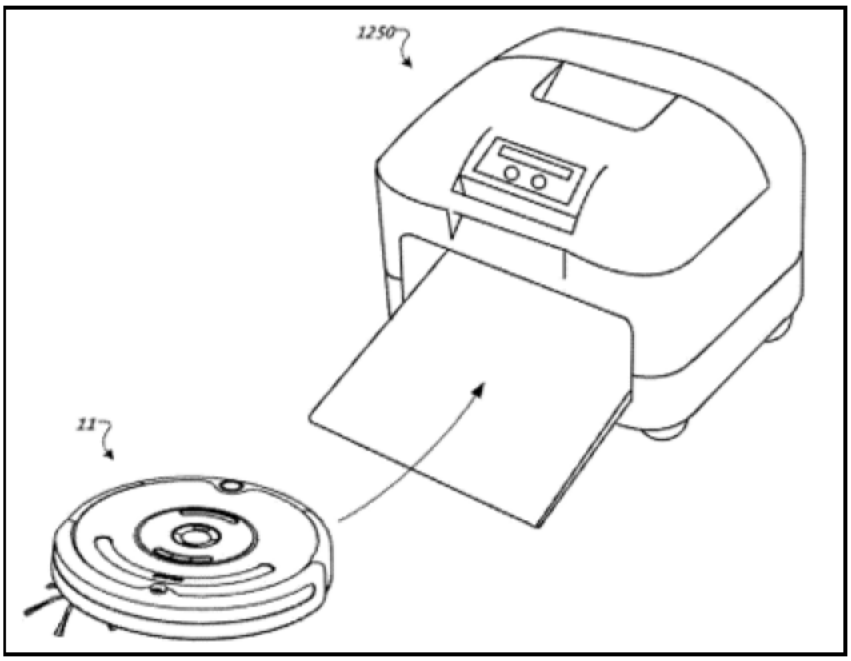

Id., Fig. 14D.

195. In embodiments, Schnittman's autonomous robotic cleaners include "debris agitators," such as brushes, that "sweep or otherwise agitate debris from the cleaning surface." *Id.*, ¶¶[0026], [0027], [0031], [0115], [0119], [0128], [0130]-[0131]. Schnittman thus discloses autonomous robotic cleaners "for cleaning debris from a … surface," as recited in the preamble of claim 1.

196. Further, Schnittman's autonomous robotic cleaners are "self-propelled" because they include an onboard drive system and wheels that move and steer the robot without external propulsion. *See, e.g.*, *id.*, ¶¶[0005] ("The drive system is

coupled to the housing and configured to maneuver the robot across a cleaning surface."), [0112] ("installed along either side of the robot body 31 are differentially driven wheels 45, each rotatable about a transverse axis, to mobilize the robot 11"), [0119] ("right and left wheel motors" for the respective "right and left differentially driven wheels 45"). In embodiments, power for moving Schnittman's autonomous robotic cleaners is provided via an onboard battery that is charged at a maintenance station (*e.g.*, the maintenance station 1250 shown above). *Id.*, ¶¶[0048], [0050], [0054], [0115], [0118], [0216]-[0217], [0221], [0227], [0230].

197. Thus, Schnittman's autonomous robotic cleaners disclose a "self-propelled … cleaner for cleaning debris from a … surface," and as explained above, a POSA would have been motivated to apply Schnittman's teachings in the pool-cleaning context for cleaning submerged surfaces in view of Benzler. Section XI.D.2. Therefore, Schnittman in view of Benzler renders obvious the "self-propelled pool cleaner for cleaning debris from a submerged surface of a swimming pool" recited in the preamble of claim 1.

b. Element 1a: "a vehicle body;"

198. Schnittman discloses element 1a of claim 1. Schnittman states that embodiments of its autonomous robotic cleaners include "a robot body 31 (*e.g.*, a chassis and/or housing) which carries an outer shell 6 connected to a bumper 5" (EX1008, ¶[0111]):

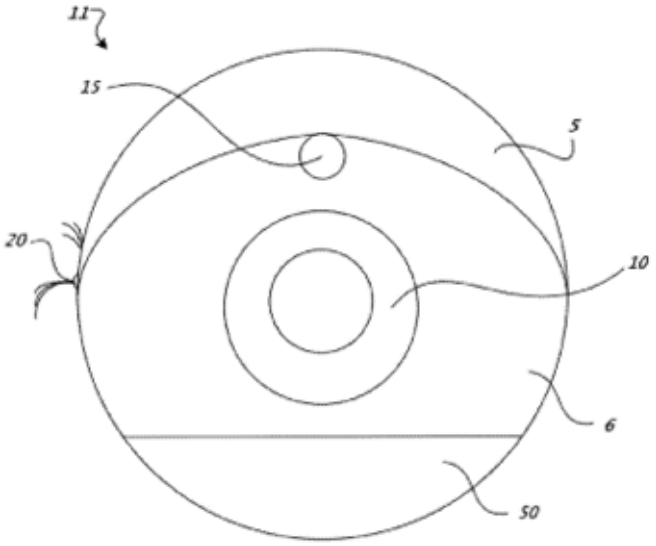

FIG. 1A

Id., Fig. 1A.

199. In embodiments, the robot body 31 "carries a control panel 10 and an omnidirectional receiver 15, which has a 360 degree line of vision for detection of signals emitted towards the robot 11 from substantially all directions." *Id.*, ¶[0111].

200. Schnittman's robot body 31 discloses the claimed "vehicle body."

c. Element 1b: "means for moving the vehicle body within the swimming pool;"

201. Schnittman in view of Benzler discloses or would have rendered obvious element 1b of claim 1. As explained in VIII above, "means for moving the vehicle body within the swimming pool" is an MPF term, and the corresponding structures disclosed in the '191 Patent include "wheels, rollers, tracks or other surface contacting members powered by a motor and the like." EX1001, 3:31-43.

202. Schnittman discloses "moving the vehicle body" and a corresponding structure described in the '191 Patent. As explained above for the preamble of claim 1, Schnittman's autonomous robotic cleaners include an onboard drive system (also referred to as a "drive assembly") for moving the robot, including its body. EX1008, ¶¶[0005], [0040], [0044], [0119], [0177]. The drive system "includes right and left differentially driven wheels 45, right and left wheel motors, and wheel encoders" in embodiments (*id.*, ¶[0119]):

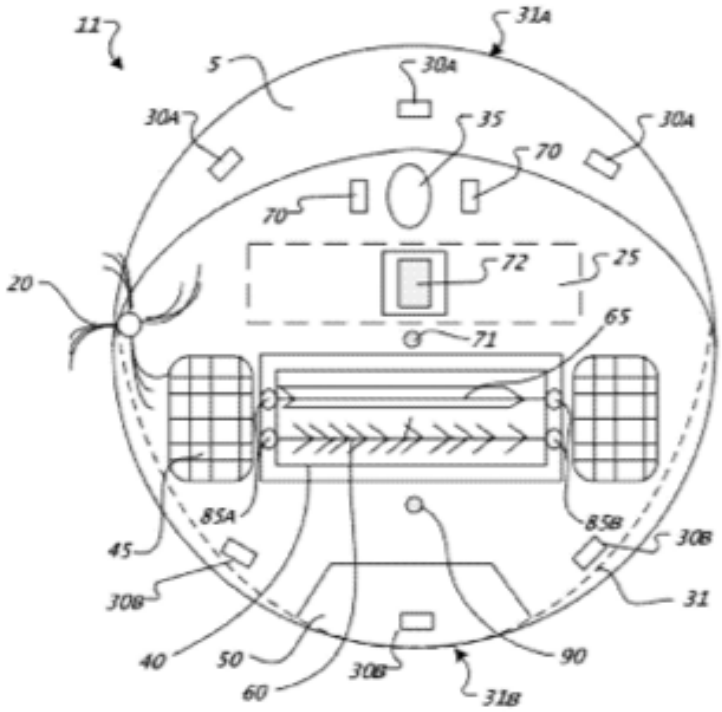

FIG. 1B

Id., Fig. 1B.

203. Schnittman's "drive system is coupled to the [robot's] housing and configured to maneuver the robot across a cleaning surface." *Id.*, ¶[0005]. Further, the drive system is "operable to receive commands from the microprocessor 245"

for controlling the movement of the robot. *Id.*, ¶[0119], [0177]. Schnittman thus discloses the claimed function ("moving the vehicle body"), and Schnittman's wheels 45 powered by right and left wheel motors disclose a corresponding structure described in the '191 Patent for performing this function.

204. While Schnittman does not disclose moving its autonomous cleaning robots "within [a] swimming pool" specifically, as explained above, a POSA would have been motivated to apply Schnittman's teachings in the pool-cleaning context in view of Benzler. Section XI.D.2. For instance, Benzler's teaching of "pool robotic vehicles [that] drive in particular on the bottom of a pool" using wheels powered by a drive motor (*id.*, ¶¶[0028], [0051], Fig. 3) provides a drive system similar to that of Schnittman, reinforcing that Schnittman's similar motor-powered wheels 45 could be readily adapted for underwater use. Therefore, Schnittman in view of Benzler renders obvious the "means for moving the vehicle body within the swimming pool (drive system)."

d. Element 1c: "a filter configured to retain debris collected from the submerged surface;"

205. Schnittman in view of Benzler discloses or would have rendered obvious element 1c of claim 1. Schnittman discloses that embodiments of its autonomous robotic cleaners include an "internal filter 54" (EX1008, ¶[0117]):

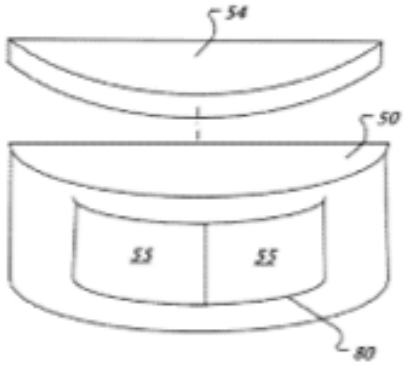

FIG. 1C

Id., Fig. 1C; *see also id.*, ¶¶[0120]-[0124], [0129].

206. Schnittman's internal filter 54 is configured to retain debris collected from a cleaning surface, such as a "submerged surface" in a pool-cleaner implementation of Schnittman's robotic cleaner in view of Benzler. In embodiments, the internal filter 54 is part of the robot's cleaning bin 50, with the internal filter 54 retaining collected debris. EX1008, ¶¶[0117], [0121], [0123]-[0124] (internal filter must be cleaned to remove collected debris), [0129], [0242], [0248]. Schnittman describes the operation of the filter in terms of filtering a "fluid" and uses debris carried in air as an example: "During use, a fluid stream 819 (*e.g.*, debris carried in air) is drawn into the bin 50 ' by negative pressure created by rotation of the impeller 817 driven by the motor 815. EX1008, ¶[0247]. A pool-cleaner implementation of Schnittman would include a filter like that described in Schnittman, with the filter retaining debris collected by the robot while passing fluid (filtered, clean water) back into the swimming pool. Such on-board filters for pool-

cleaning robots were well-known at the time of the alleged invention, and a POSA would have understood how to modify or replace Schnittman's filter for use in Benzler's pool-cleaning context. I note that the same mechanical elements are commonly used to filter both water and air. These elements include a motor-driven impeller to move the fluid and a filter to retain the debris. In common wet/dry vacuum cleaners, these elements can handle either water or air as the fluid. A POSA's motivation for making such modifications is explained above in Section XI.D.2. Therefore, Schnittman in view of Benzler renders obvious "a filter [*i.e.*, Schnittman's internal filter 54] configured to retain debris collected from the submerged surface."

e. Element 1d: "at least one camera positioned on or in the body for capturing an image of at least a first portion of the submerged surface; and"

207. Schnittman in view of Benzler discloses or would have rendered obvious element 1d of claim 1. Schnittman discloses that embodiments of its autonomous robotic cleaners include a camera, such as the exemplary camera 1190 of Figure 11:

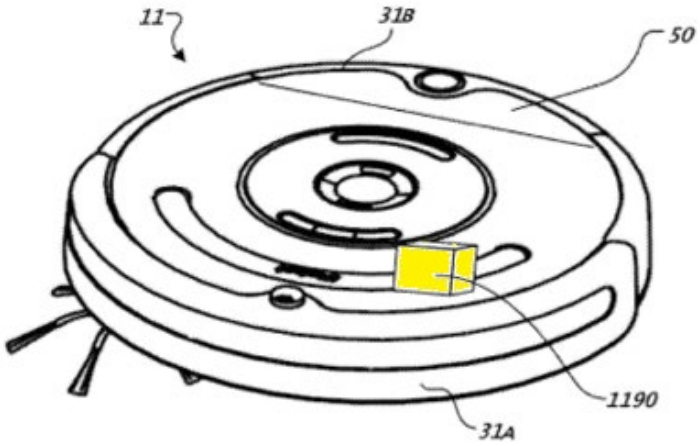

FIG. 11

EX1008, Fig. 11; *see also id.*, ¶¶[0045], [0204]-[0205].

208. As seen above, Schnittman's camera is positioned on or in the body of the robot. *Id.*, ¶[0204] ("Referring to FIG. 11, in some implementations, the robot 11 includes a camera 1190 disposed toward the forward portion of the robot 11, with a field of view beyond the perimeter of the robot 11."). The camera captures an image of at least a first portion of a cleaning surface. Specifically, the camera "scan[s] an area substantially forward of the [robot]" as the "robot [moves] over the cleaning surface." EX1008, ¶¶[0045], [0204]. The camera is "in communication with [a] microprocessor 245," and the "microprocessor 245 … process[es] [a] signal from the camera … to recognize debris on the cleaning surface and maneuver the robot 11 toward the debris." *Id.*, ¶[0204]. A POSA would have thus understood that Schnittman's camera captures an image of at least a portion of the cleaning surface:

The microprocessor could not "recognize debris on the cleaning surface" absent an image of the cleaning surface captured by the camera.

209. By the July 10, 2012 priority date of the '191 patent, the use of cameras in underwater environments was commonplace, as evidence by the previously cited chapter "Computer Vision Applications In the Navigation of Unmanned Underwater Vehicles" in the 2009 monograph "Underwater Vehicles" (EX1026) and by the common use of underwater cameras and computer vision systems in student competitions as evidenced by the RoboSub SubjuGator paper. *See* EX1017. The team I advised at the 2011 RoboSub competition used two GoPro HERO HD cameras for vision. EX1028. Each camera provided a 170 degree horizontal and 127 degree vertical field of view. *Id.* Each camera was mounted in a waterproof GoPro HERO Stereo vision case that was tethered to the main computer and electronics box via USB cables. *Id.* The vision system was able to reliably detect different colored objects in tests conducted in the university swimming pool. *Id.*

210. While Schnittman does not disclose capturing an image of a "submerged [*i.e.*, underwater] surface," specifically, a pool-cleaner implementation of Schnittman in view of Benzler would capture such an image, and a POSA would have been motivated to pursue such an implementation for the reasons in Section XI.D.2 above. Accordingly, Schnittman in view of Benzler renders obvious the

claimed "at least one camera [*i.e.*, Schnittman's camera 1190] positioned on or in the body for capturing an image of at least a first portion of the submerged surface."

f. Element 1e: "a controller (i) positioned on or in the body,"

211. Schnittman discloses element 1e of claim 1. Schnittman discloses that embodiments of its autonomous robotic cleaners include a microprocessor, an example of which is the microprocessor 245 of Figure 2 (EX1008, ¶[0118]):

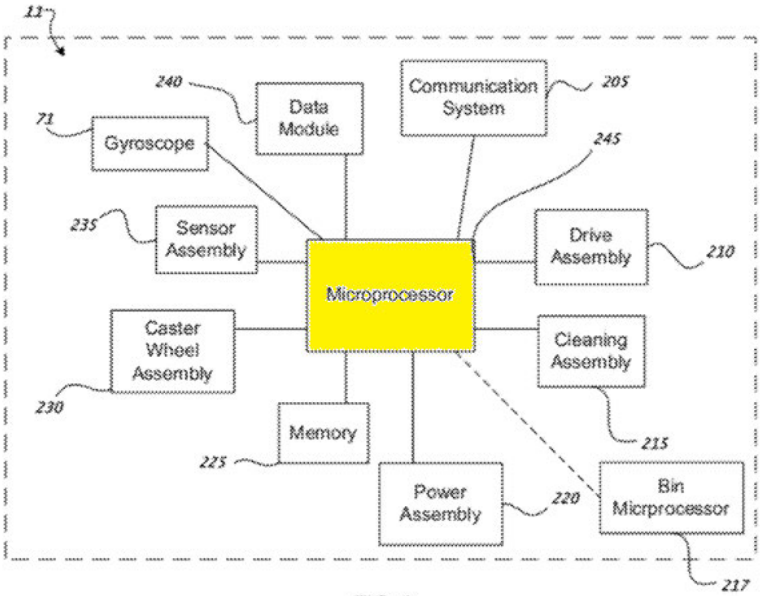

FIG. 2

Id., Fig. 2.

212. Schnittman's microprocessors are "capable of executing routines and generating and sending control signals" for "controlling [the robot's] drive assembly" and other components. *Id.*, ¶¶[0118]-[0119], [0177]. In the example of Schnittman's Figure 2, the routines executed by the microprocessor 245 are stored in the memory 225, and a data module 240 is configured to "upload new software

routines or values to the robot 11." *Id.*, ¶[0118]. Schnittman's microprocessor discloses the claimed "controller" because it controls operation of the autonomous cleaning robot and is similar to controllers described in the '191 Patent. For instance, the '191 Patent describes that its controller may be implemented using "one or more processing units … that execute[] sequences of instructions contained in a memory," with the execution of such sequences "caus[ing] the processing unit to perform steps such as generating control signals." EX1001, 4:16-26 ("The instructions may be loaded in a random access memory (RAM) for execution by the processing unit from a read only memory (ROM), a mass storage device, or some other persistent storage."). Schnittman's microprocessor 245 likewise executes routines stored in memory to generate control signals for controlling the robot, and the microprocessor 245 thus discloses the claimed "controller." EX1008, ¶¶[0118]-[0119], [0177].

213. Schnittman's microprocessor 245 is also positioned on or in the body of the robot, as claimed. In the example of Figure 2, the microprocessor 245 is part of the robot 11, and thus would be positioned on or in the robot's body. EX1008, ¶¶[0118] ("The robot 11 includes a microprocessor 245 …."). Further, Schnittman states that the microprocessor is "included within the robot 11." *Id.* Therefore, Schnittman's microprocessor 245 teaches "a controller" that is "positioned on or in the body."

g. Element 1f: "[the controller] (ii) in electronic communication with the at least one camera, and"

214. Schnittman discloses element 1f of claim 1. Schnittman discloses that its microprocessor (*i.e.*, "controller") is in communication with the robot's camera and configured to process signals from the camera: "[C]amera 1190 can be in communication with the microprocessor 245 …. [T]he microprocessor 245 can process the signal from the camera 1190 to recognize debris on the cleaning surface and maneuver the robot 11 toward the debris. Additionally or alternatively, the microprocessor 245 can process the signal from the camera 1190 to recognize obstacles and/or debris in the vicinity of the robot 11 and maneuver the robot 11 to avoid obstacles and/or debris …." EX1008, ¶¶[0204]-[0205]. Schnittman thus discloses the claimed controller (*i.e.*, Schnittman's microprocessor 245) "in electronic communication with the at least one camera [*i.e.*, Schnittman's camera 1190]."

h. Element 1g: "[the controller] (iii) configured to generate, in response to the captured image, at least one control signal to cause movement of the body within the swimming pool to, or away from, the first portion of the submerged surface."

215. Schnittman discloses or would have rendered obvious element 1g of claim 1. Schnittman discloses that its microprocessor (*i.e.*, "controller") generates commands (*i.e.*, "control signals") to cause movement of the robot and its body: "The drive assembly 210 is connected to the microprocessor 245" and "is operable

to receive commands from the microprocessor 245." EX1008, ¶[0119]; *see also id.*, ¶[0177] ("The microprocessor [245] can move the robot 11 through one or more of the spot coverage patterns below aby controlling the drive assembly 210 based at least in part on a signal received from the gyroscope 71."). The control signals generated by Schnittman's microprocessor can cause the robot to move based on detected debris and/or in different cleaning patterns, including those of Figures 10A and 10B (*id.*, ¶¶[0177], [0191]-[0203]):

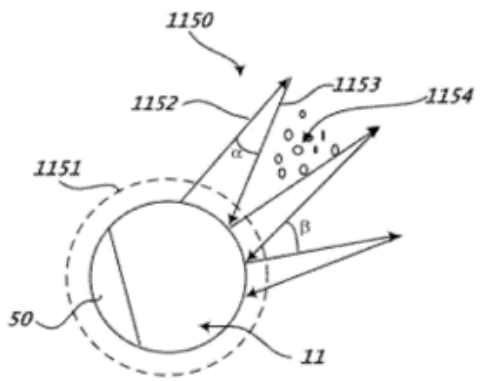

FIG. 10A

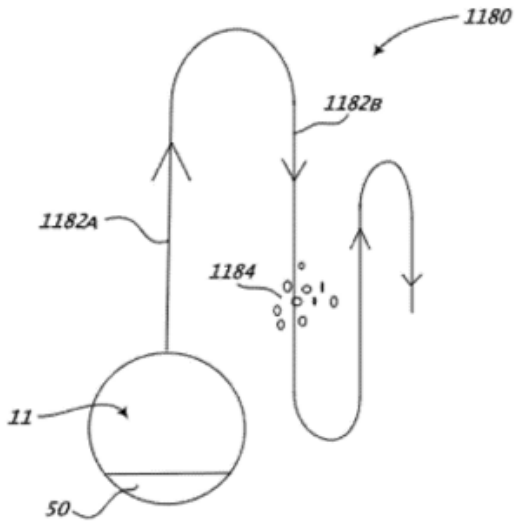

FIG. 10B

Id., Figs. 10A, 10B.

216. Accordingly, Schnittman discloses the claimed controller configured to generate control signals to cause movement of the robot's body.

217. Schnittman further discloses the generation of such control signals "in response to the captured image." Schnittman states that its camera "can be in

communication with the microprocessor 245 such that the movement of the robot 11 over the cleaning surface can be based at least in part on the detection of debris and/or an obstacle by the camera 1190." EX1008, ¶[0204]. Schnittman further explains that its microprocessor "can process the signal from the camera" and control movement of the robot accordingly. *Id.*, ¶¶[0204]-[0205]. A POSA would thus understand that Schnittman's microprocessor generates control signals for moving the robot based on ("in response to") the image captured by the robot's camera. Such control signals "cause movement of the [robot's] body … to, or away from, the first portion of the … surface," as claimed:

> [T]he microprocessor 245 can process the signal from the camera 1190 to recognize debris on the cleaning surface and ***maneuver the robot 11 toward the debris***. Additionally or alternatively, the microprocessor 245 can process the signal from the camera 1190 to recognize obstacles and/or debris in the vicinity of the robot 11 and ***maneuver the robot 11 to avoid obstacles and/or debris*** larger than a specific size threshold (e.g., a value less than about the smallest opening defined by the cleaning head).

EX1008, ¶¶[0204]-[0205].

218. The image captured by Schnittman's camera depicts a portion of the cleaning surface (*see* Element 1d above), and the microprocessor processes the image to recognize debris in the image. By the 2012 priority date of the '191 patent, the use of computer vision to detect obstacles, shades and colors was well developed. Based on the recognized debris in the image, the microprocessor generates control signals for moving the robot toward or away from the portion of the cleaning surface

having the recognized debris. *Id.* Accordingly, Schnittman discloses the claimed controller "configured to generate, in response to the captured image, at least one control signal to cause movement of the body … to, or away from, the first portion of the [cleaning] surface."

219. While Schnittman does not disclose the generation of control signals for causing movement "within the swimming pool" and toward a portion of a "submerged [*i.e.*, underwater] surface," specifically, a POSA would have understood, in view of Benzler, how to adapt Schnittman's autonomous robotic cleaners for use in this context and would have been motivated to do so for the reasons in Section XI.D.2 above. Therefore, Schnittman in view of Benzler renders obvious "a controller (microprocessor 245)" "configured to generate, in response to the captured image, at least one control signal to cause movement of the body within the swimming pool to, or away from, the first portion of the submerged surface."

220. Schnittman in view of Benzler renders obvious claim 1 of the '191 Patent.

4. Independent Claim 2

221. Claim 2 of the '191 Patent is unpatentable over Schnittman in view of Benzler for the reasons explained above for claim 1. *See also* Section XI.A.2.

5. Independent Claim 3

222. Claim 3 of the ’191 Patent is unpatentable over Schnittman in view of Benzler for the reasons explained above for claim 1. *See also* Section XI.A.3.

XII. ANALYSIS OF THE ’766 PATENT

A. Ground 1a: Fu Anticipates Claims 1-4

223. In my opinion, as set forth below, claims 1-4 of the ’766 patent are unpatentable as being anticipated by Fu.

1. Independent Claim 1

224. In my opinion, as set forth below, claim 1 of the ’766 patent is unpatentable as being anticipated by Fu.

a. Preamble: “A self-propelled pool cleaner for cleaning debris from a submerged surface of a swimming pool, comprising:”

225. To the extent limiting, the preamble of claim 1 is disclosed by Fu. Fu discloses “an underwater cleaning robot” designed “for the underwater cleaning of swimming pool floors and walls.” EX1007, Abstract. An example of Fu’s underwater cleaning robot is depicted in Figure 1:

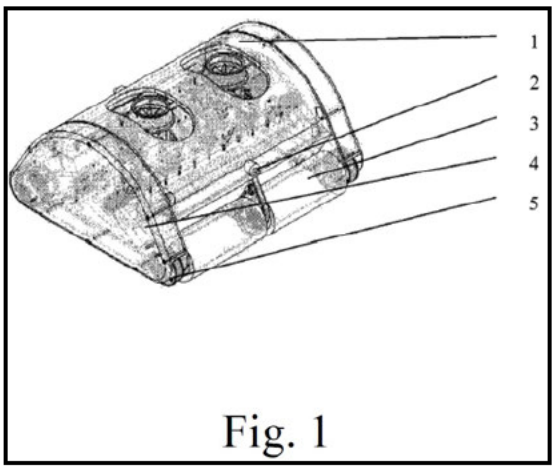

Fig. 1

Id., Fig. 1.

226. Fu's robot includes, among other components, "a drainage mechanism [and] a cleaning and mobility platform." *Id.*, ¶[0024]. The cleaning and mobility platform enables the robot to move around the pool and remove debris from its surfaces, *e.g.*, using brushes. *Id.*, ¶¶[0010], [0024]-[0026] ("brush-cleaning"). The drainage mechanism "draws pool water from the bottom of the robot" such that the "water passes through the water flow filter screen 23, which filters out debris, and the clean water is then discharged." *Id.*, ¶[0026]. Thus, Fu's underwater cleaning robot is a "pool cleaner for cleaning debris from a submerged surface of a swimming pool."

227. Fu further discloses that its robot is self-propelled. Fu's cleaning and mobility platform comprises "four independent cleaning driving wheels 3" that "are controlled by their respective motor drivers, allowing for independent movement." *Id.*, ¶[0026]. In the autonomous mode, "control signals are generated by the central

processor, which autonomously plans paths and actions … to drive the robot's execution layer and complete the underwater cleaning task." *Id.*, ¶[0025]. The execution layer comprises the motor drivers and the cleaning driving wheel DC motors 7, which drive the cleaning driving wheels 3. *Id.*, ¶[0024]. Fu's robot is thus "self-propelled" because it moves without external propulsion. Fu also describes various components for powering such movement, including an onboard "rechargeable battery box." *Id.*, ¶¶[0007], [0008], [0024], [0025].

228. For at least these reasons, Fu discloses the claimed "self-propelled pool cleaner [underwater cleaning robot] for cleaning debris from a submerged surface of a swimming pool."

b. Element 1a: "a vehicle body;"

229. Fu discloses element 1a. As shown in Figure 1, Fu illustrates the "[o]verall schematic diagram of the underwater cleaning robot," which includes "1 - robot housing body" (EX1007, ¶[0014]):

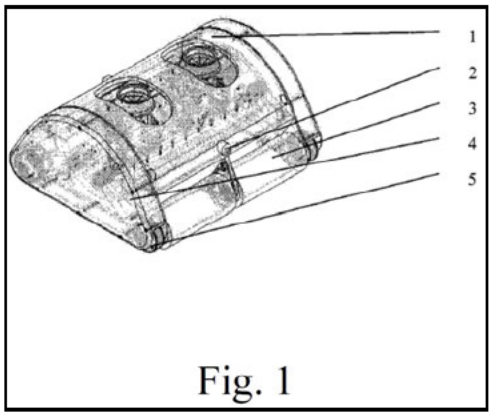

Id., Fig. 1.

230. Fu further specifies that the "housing body 1 comprises a robot top cover 18, robot side walls 20, and a robot main housing body 19." *Id.*, ¶[0024].

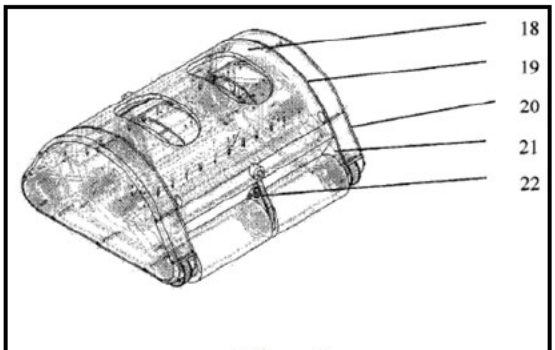

Fig. 4

Id., Fig. 4.

231. Accordingly, Fu discloses the claimed "vehicle body [robot housing body 1]."

c. Element 1b: "means for moving the vehicle body within the swimming pool;"

232. Fu discloses element 1b. As explained in Section VIII above, "means for moving the vehicle body within the swimming pool" is an MPF term, and the corresponding structures disclosed in the '766 Patent include "wheels, rollers, tracks or other surface contacting members powered by a motor and the like." EX1003, 3:31-43.

233. Fu discloses "moving the vehicle body" and a corresponding structure described in the '766 Patent. Specifically, Fu's robot comprises a cleaning and mobility platform that enables controlled movement of the robot body. EX1007, ¶[0024]. The cleaning and mobility platform, illustrated in Figure 1 reproduced

above, comprises "a robot housing body 1, cleaning driving wheels 3, synchronous belt gears 5, and a driving synchronous belt 4." *Id.* A driving DC motor 7 drives the cleaning driving wheels 3 via the synchronous belt gears 5 and the driving synchronous belt 4. *Id*., ¶¶[0007],[0024] ("Said cleaning driving wheel DC motors [7] are equipped with reduction gearboxes and encoders. They are installed and fixed via front flanges to the side wall of the driving and control sealed housing and the side wall of the robot main housing body [19], and they drive the cleaning driving wheels [3] via synchronous belt gears [5] and synchronous belts [4].").

234. Further, the cleaning driving wheels 3 "are controlled by their respective motor drivers, allowing for independent movement." *Id.*, ¶[0026], Fig. 1. "By using different combinations of wheel speeds, the robot can perform tasks such as moving forward, backward, turning, and brush-cleaning." *Id*, ¶[0026]. Fu thus discloses the claimed function ("moving the vehicle body within the swimming pool"), and Fu's driving wheels 3 powered by cleaning driving wheel DC motors 7 disclose a corresponding structure described in the '766 Patent for performing this function.

235. In sum, Fu teaches the claimed "means for moving the vehicle body within the swimming pool [driving wheels 3 powered by cleaning driving wheel DC motors 7]."

d. Element 1c: "a filter configured to retain debris collected from the submerged surface;"

236. Fu discloses element 1c. Fu's underwater cleaning robot includes a "drainage mechanism" that is designed to draw in pool water, filter out debris from the water, and discharge the filtered water while retaining the debris. EX1007, ¶¶[0024]-[0026]. An example schematic of the drainage mechanism is illustrated in Figures 3 and 5:

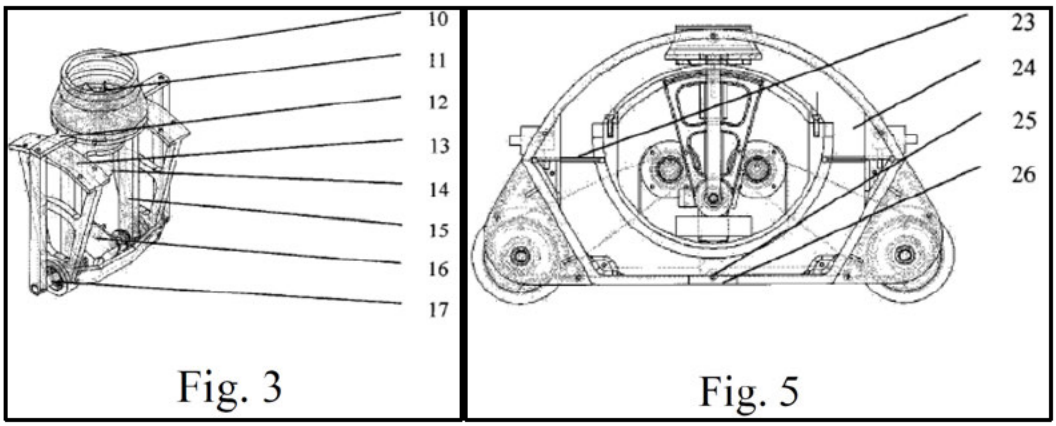

Id., Fig. 3 (water discharger), Fig. 5 (side cross-sectional view of the robot).

237. The drainage mechanism "comprises a water discharger, a water flow channel 24 …, a water flow filter screen 23, and a water inlet [26] with an anti-backflow device 25." *Id*, ¶[0024]. During operation, "the drainage propeller high-speed DC motor 14 … drives the drainage propeller 11 to rotate … expel[ling] water from within the robot's water flow channel 24, creating a high negative pressure inside." *Id.*, ¶[0026]. This negative pressure "draws pool water from the bottom of the robot into the water flow channel 24 through the water inlet [26]." *Id*. Once in

the flow channel 24, the "water passes through the water flow filter screen 23, which filters out debris, and the clean water is then discharged." *Id*.

238. Fu further makes clear that the drainage mechanism retains the debris that is filtered out from the pool water. "An anti-backflow device 25 is installed above the water inlet 26," which opens "[w]hen water flows in through the inlet," and closes "[w]hen the water flow stops," thus "prevent[ing] debris from flowing out of the water flow channel 24." *Id*. Thus, debris that is filtered out by the filter screen 23 is retained within the water flow channel 24. Fu also describes that "[w]hen the debris [inside the water flow channel 24] reaches a certain density, [the underwater cleaning robot] issues a 'debris full' alarm," further confirming that the drainage mechanism is configured to retain the debris collected from the submerged surface as claimed. *Id*.

239. Thus, Fu discloses "a filter [filter of Fu's drainage mechanism] configured to retain debris collected from the submerged surface."

e. Element 1d: "at least one camera mounted directly or indirectly to the body for capturing an image of at least a first portion of the submerged surface; and"

240. Fu discloses element 1d. Fu's robot comprises "2 – monitoring camera," as shown in Figure 1 (EX1007, ¶[0014], Fig. 1):

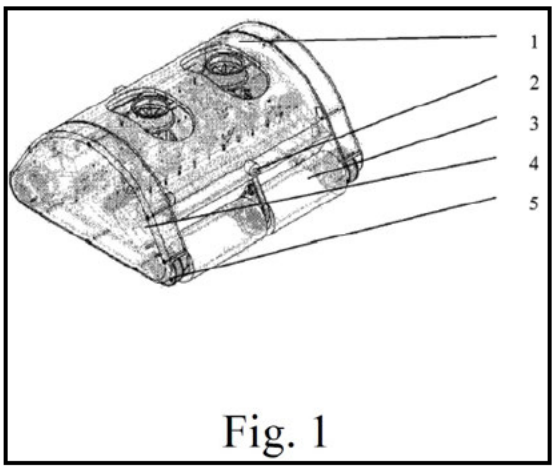

Fig. 1

241. "Said monitoring cameras 2 are installed on the two front panels of the robot main housing body," such that the cameras 2 are "mounted directly or indirectly to the body," as claimed. *Id.*, ¶[0024]. The robot "uses its monitoring cameras 2 to capture images of the pool floor," which is the claimed submerged surface. *Id.*, ¶[0026].

242. Therefore, Fu discloses "at least one camera [monitoring cameras 2] mounted directly or indirectly to the body [robot housing body 1] for capturing an image of at least a first portion of the submerged surface ["capture images of the pool floor"]."

f. Element 1e: "a controller (i) positioned on or in the body,"

243. Fu discloses element 1e. Fu discloses a control system that includes "a central processor, monitoring cameras, an image acquisition card, … motor drivers, a control system box 8, cleaning driving wheel DC motors 7" all of which are encapsulated within a "control system box 8." EX1007, ¶[0024], Fig. 6.

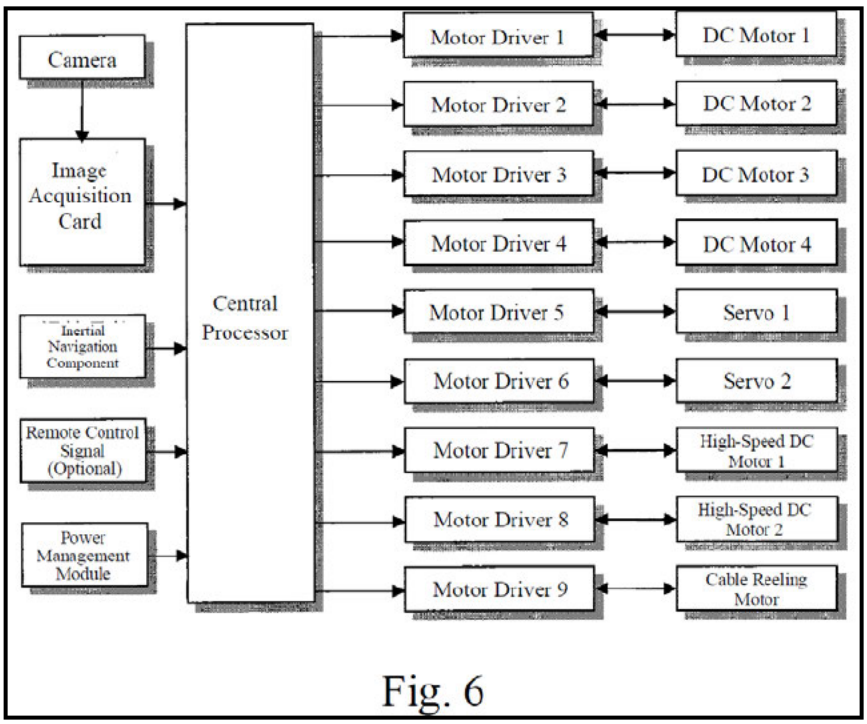

Fig. 6

Id., Fig. 6.

244. "The underwater cleaning robot controls its actions according to control commands issued by the central processor." *Id.*, ¶¶[0010], [0026].

245. The control system box 8 "is fixed to the bottom of the driving and control sealed housing [6]," as shown in Figure 2 below. *Id.*, ¶[0024], Fig. 2.

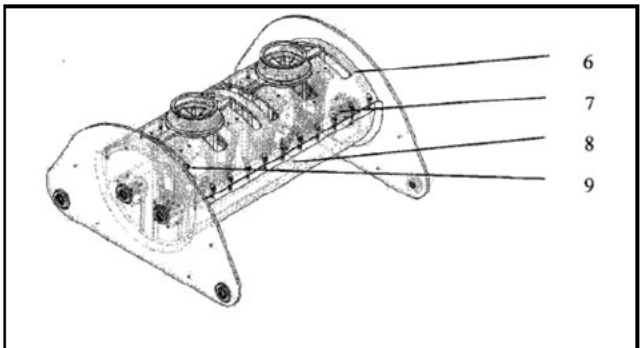

Fig. 2

246. Therefore, Fu's control system, which comprises the central processor that generates control signals for controlling the robot, and is positioned on the driving and control sealed housing 6, teaches "a controller" that is "positioned on or in the body." *Id*., ¶[0026].

g. Element 1f: "[the controller] (ii) in electronic communication with the at least one camera, and"

247. Fu discloses element 1f. As seen in Figure 6 (reproduced for preceding element 1e), "the monitoring cameras (2) are connected to the central processor via the image acquisition card." EX1007, Fig. 6, claim 1. The image acquisition card serves as an electronic interface that transmits image data from the monitoring cameras 2 to the central processor of the control system for processing, such that the controller (control system with the central processor) is "in electronic communication with the at least one camera [monitoring cameras 2]," as claimed.

h. Element 1g: "[the controller] (iii) configured to generate, in response to the captured image, at least one control signal to cause movement of the body within the swimming pool to, or away from, the first portion of the submerged surface."

248. Fu discloses element 1g. Fu explains that "[t]he monitoring cameras 2 and the image acquisition card constitute the environmental perception layer of the control system." EX1007, ¶[0024]. "[I]nformation from the environmental perception layer," *i.e.*, image captured by the monitoring cameras 2, is expressly

identified as the basis upon which "control signals are generated by the central processor … to drive the robot[]" in the autonomous mode. *Id.*, ¶[0025].

249. Fu further describes its control architecture in which the image acquisition card comprises the control system's input, and the motor drivers that drive the cleaning driving wheels 3 comprise the output. *Id.*, ¶[0007], [0024]. As shown in Figure 6, the image acquisition card transmits the image captured by the cameras 2 to the central processor. *Id.*, Fig. 6, claim 1. Based on the captured image, "control signals are generated by the central processor, which autonomously plans paths and actions … to drive the robot's execution layer [*i.e.*, the motor drivers] and complete the underwater cleaning task." *Id.*, ¶[0025]. In other words, the central processor receives the captured image from the cameras 2 and generates control signals based on the captured image to instruct the motor drivers on how to move the robot.

250. Fu further describes how its central processor uses the captured image to generate control signals for moving the robot:

> During the autonomous cleaning process, a pool cleanliness image threshold is set. The robot uses its monitoring cameras 2 to capture images of the pool floor and compares them with the threshold to determine the level of cleanliness. It then plans its cleaning movements and adjusts the working state of the four cleaning driving wheels 3 and the water discharger to complete the cleaning task. Specifically, the speed of each wheel 3 can be adjusted. By using different combinations of wheel speeds, cleaning actions of varying intensity can be achieved. For example, if the front wheels rotate

> quickly clockwise and the rear wheels rotate slowly counter-clockwise, the underwater cleaning robot will advance in the direction determined by the clockwise rotation of the front wheels.

EX1007, ¶[0026].

251. Fu also explains that "[b]y using different combinations of wheel speeds, the robot can perform tasks such as moving forward, backward, [and] turning," thus confirming that the generated signals cause the robot to move "to, or away from" a pictured region based on the cleanliness determination. *Id.*

252. In sum, Fu's central processor uses the captured image by the monitoring cameras 2 to assess the "level of cleanliness" of the pictured region of the pool as compared against a "pool cleanliness image threshold." *Id.* Based on that assessment, the central processor "plans its cleaning movements and adjusts the working state of the four cleaning driving wheels 3" to "perform tasks such as moving forward, backward, [and] turning." *Id.* Fu thus discloses the claimed controller (control system with the central processor) "configured to generate, in response to the captured image, at least one control signal to cause movement of the body within the swimming pool to, or away from, the first portion of the submerged surface." A POSA would have recognized that any robot movement would necessarily be "to, or away from, the first portion" captured by Fu's monitoring cameras 2. Further, because the central processor generates control signals in response to the cleanliness level of a particular pictured region, and those control

signals drive movement in "forward, backward, [or] turning" directions, a POSA would have understood that the controller directs the robot toward regions assessed as falling below the "pool cleanliness image threshold" and away from regions assessed as falling above.

253. Fu anticipates claim 1.

2. Independent Claim 2

254. Claim 2 is anticipated by Fu for the reasons explained above for claim 1. Claim 2 recites all the limitations of claim 1, with the only difference being that claim 2 recites "at least one camera carried by the body," whereas claim 1 recites "at least one camera mounted directly or indirectly to the body":

> ~~1~~2. A self-propelled pool cleaner for cleaning debris from a submerged surface of a swimming pool, comprising:
>
> a. a vehicle body;
>
> b. means for moving the vehicle body within the swimming pool;
>
> c. a filter configured to retain debris collected from the submerged surface;
>
> d. at least one camera ~~mounted directly or indirectly to~~carried by the body for capturing an image of at least a first portion of the submerged surface; and
>
> e. a controller (i) positioned on or in the body, (ii) in electronic communication with the at least one camera, and (iii) configured to generate, in response to the captured image, at least one control signal to cause movement of the body within the swimming pool to, or away from, the first portion of the submerged surface.

255. These limitations are substantially the same, differing only in wording. A camera that is mounted directly or indirectly to the body is, by definition, carried by the body. Thus, Fu anticipates claim 2.

3. Independent Claim 3

256. Claim 3 is anticipated by Fu. The preamble and elements 3a-3c of claim 3 are the same as the preamble and elements 1a-1c of claim 1:

> ~~1~~3. A self-propelled pool cleaner for cleaning debris from a submerged surface of a swimming pool, comprising:
>
> a. a vehicle body;
>
> b. means for moving the vehicle body within the swimming pool;
>
> c. a filter configured to retain debris collected from the submerged surface;
>
> d. at least one camera ~~mounted directly or indirectly to~~positioned on or in, or carried by, the body for capturing an image of at least a first portion of the submerged surface; and
>
> e. a controller (i) positioned on or in the body, (ii) in electronic communication with the at least one camera and a portable electronic device, and (iii) configured to generate, in response to at least one of the captured image or information from the portable electronic device, at least one control signal to cause movement of the body within the swimming pool to, or away from, the first portion of the submerged surface.

257. Similarly, element 3d is substantially the same as element 1d, differing only in wording. A camera that is "mounted directly or indirectly to the body" is,

by definition, "positioned on or in, or carried by the body." Therefore, the preamble and elements 3a-3d are disclosed by Fu for the reasons explained above for claim 1.

a. Element 3e: "a controller (i) positioned on or in the body,"

258. Fu discloses element 3e for the reasons explained above for element 1e of claim 1.

b. Element 3f: "[the controller] (ii) in electronic communication with the at least one camera and a portable electronic device, and"

259. Fu discloses element 3f. Fu discloses that the controller (control system with the central processor) is "in electronic communication with the at least one camera [monitoring cameras 2]" for the reasons explained above for element 1f of claim 1.

260. Additionally, Fu teaches the claimed "portable electronic device." Fu teaches that in the manual mode, "control signals are issued by manual operation of a control keypad [31] and [these control signals] control the underwater cleaning robot directly or indirectly via the control signal floating antenna [27]." EX1007, ¶¶[0008], [0025]. Figures 7 and 8 show an example illustration of the control keypad 31 as a remote, external unit that is untethered to the robot, underscoring that it is a separate, portable electronic device:

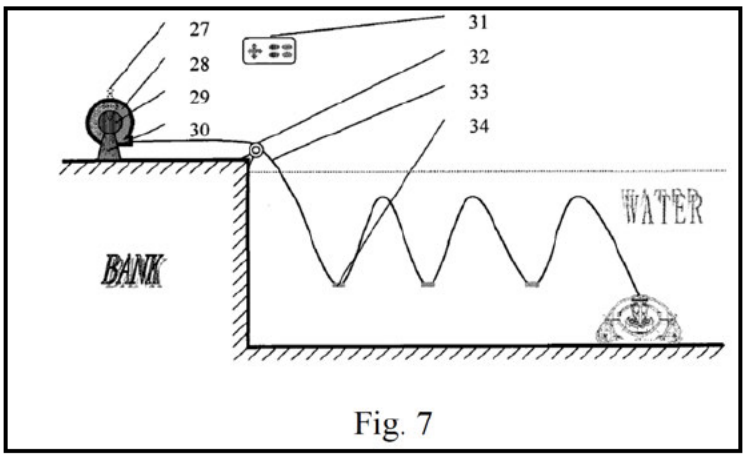

Fig. 7

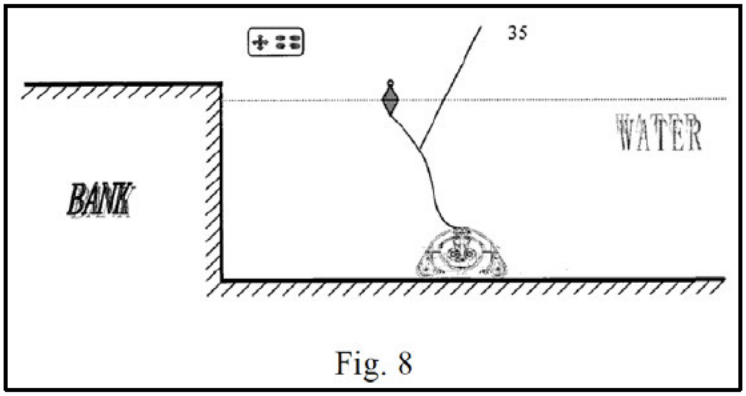

Fig. 8

Id., Figs. 7, 8.

261. These figures also show that the control keypad 31 includes various buttons for user input for controlling the robot.

262. Fu further explains that the control signal floating antenna 27 "communicate[s] wirelessly with the control keypad 31" to receive the control signals. *Id*., ¶¶[0007], [0024]. The antenna 27 then transmits those signals to the remote control signal interface, which is a part of the robot's control system, either directly or indirectly. *Id*., ¶¶[0007], [0008], [0024]-[0025]. In one embodiment, where the robot is used with the signal and power cable 33 for "long-duration, global

cleaning" (Figure 7), the floating antenna 27 transmits the control signals from the control keypad 31 to the remote control signal interface indirectly via the signal and power cable 33. *Id*. In an alternative embodiment, where the robot performs "short-duration, local cleaning" without the cable 33 (Figure 8), the floating antenna 27 transmits the control signals from the control keypad 31 directly to the remote control signal interface via the control signal floating antenna cable 35. *Id*.

263. Fu further makes clear that the remote control signal interface provides input to the central processor. *Id*., ¶¶[0007], [0024].

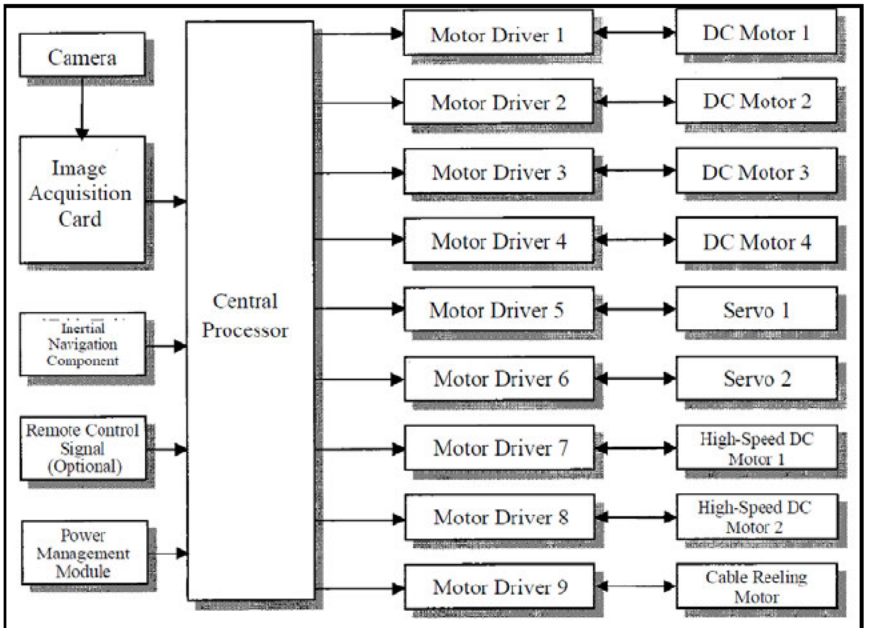

Fig. 6

Id., Fig. 6.

264. In sum, Fu discloses that the remote control keypad 31 sends electronic control signals to the floating antenna 27, which relays those signals, via cable 33 or

cable 35, to the remote control signal interface, which relays those signals to the central processor of the control system. *Id*., ¶¶[0007], [0008], [0024]-[0025].

265. Fu further reinforces that its control system is designed to interface with various types of portable electronic devices. For example, Fu discloses that "the signal relay and cable manager 28 can be connected to an external display device to show the working status and relevant performance indicators of the underwater cleaning robot," thus confirming that Fu contemplates various types of portable electronic devices, including display devices. *Id*., ¶[0024].

266. Therefore, Fu's controller (control system with the central processor) is "in electronic communication with the at least one camera [monitoring cameras 2] and a portable electronic device [control keypad 31]," as claimed.

c. Element 3g: "[the controller] (iii) configured to generate, in response to at least one of the captured image or information from the portable electronic device, at least one control signal to cause movement of the body within the swimming pool to, or away from, the first portion of the submerged surface."

267. Fu discloses element 3g. Fu discloses that the controller is "configured to generate, in response to … the captured image …, at least one control signal to cause movement of the body within the swimming pool to, or away from, the first portion of the submerged surface" for the reasons explained above for element 1g of claim 1.

268. Additionally, as explained above with respect to element 3f, Fu also discloses that in the manual cleaning mode, the control signals, *i.e.*, "information," issued by the portable electronic device (control keypad 31) are relayed to the central processor that directs the robot's movement based on the control signals. *Id.*, ¶¶[0007], [0008], [0024]-[0025].

269. Therefore, Fu discloses that the controller (control system with the central processor) is "configured to generate, in response to at least one of the captured image [image captured by monitoring cameras 2] or information from the portable electronic device [control keypad 31], at least one control signal to cause movement of the body [robot housing body 1] within the swimming pool to, or away from, the first portion of the submerged surface."

270. Thus, Fu anticipates claim 3.

4. Independent Claim 4

271. Claim 4 is anticipated by Fu for the reasons explained above for claim 1. Claim 4 recites all the limitations of claim 1, but claim 4 is broader because it does not require the "at least one camera" to be "mounted directly or indirectly to the body" as claim 1 does:

> ~~1~~4. A self-propelled pool cleaner for cleaning debris from a submerged surface of a swimming pool, comprising:
>
> a. a vehicle body;
>
> b. means for moving the vehicle body within the swimming pool;

c. a filter configured to retain debris collected from the submerged surface;

d. at least one camera ~~mounted directly or indirectly to the body~~ for capturing an image of at least a first portion of the submerged surface; and

e. a controller (i) positioned on or in the body, (ii) in electronic communication with the at least one camera, and (iii) configured to generate, in response to the captured image, at least one control signal to cause movement of the body within the swimming pool to, or away from, the first portion of the submerged surface.

272. Because Fu anticipates the narrower claim 1, Fu likewise anticipates the broader claim 4 eliminating the requirement that the camera be mounted to the body.

273. Fu anticipates claim 4.

B. Ground 1b: Claims 1-4 Would Have Been Obvious Over Fu

274. Fu anticipates claims 1-4. *See* Ground 1a. However, should the Board find that Fu does not anticipate claims 1-4 because it allegedly lacks a control signal that causes movement of the vehicle body "to, or away from, the first portion of the submerged surface,"[13] Fu nevertheless would have rendered obvious these claims.

[13] As explained in Section XII.A.1.h, such a finding would be erroneous because claims 1-4 encompass any control signal generated in response to a captured image that causes movement of the vehicle body: Once the camera captures an image of a portion of the submerged surface, the vehicle occupies some finite position relative to that portion. *Any* movement commanded by the control signal—whether forward, backward, laterally, vertically, or along any trajectory—will necessarily decrease or increase the distance between the vehicle body and that imaged

275. A POSA would have found it obvious to implement motion control in Fu to direct the cleaning robot toward image-identified dirty regions (*i.e.*, regions below Fu's cleanliness threshold) and away from clean regions (*i.e.*, regions above the threshold). Fu already teaches acquiring an image of submerged pool surfaces (EX1007, ¶[0026]), comparing the image to a cleanliness image threshold (*id.*), and "plan[ning] … cleaning movements" and "adjust[ing] the working state of the four cleaning drive wheels 3 … to complete the cleaning task" based on this comparison (*id.*). Once Fu's system distinguishes areas as sub-threshold versus above-threshold, using that information to guide the robot's movement towards dirtier areas and away from cleaner areas would have been a routine, predictable application that would have been obvious to a POSA.

276. A POSA would have been motivated to implement Fu's pool-cleaning robot such that it moves toward dirtier (sub-threshold) regions and away from cleaner (above-threshold) regions because this would improve cleaning efficiency and task completion time. The resulting behavior—spending more time in dirtier areas and less in cleaner areas—would have been the expected and desirable outcome of applying Fu's thresholded cleanliness information to motion control.

---

portion, *i.e.*, it will be movement "to, or away from" that portion. Because Fu discloses the generation of a control signal in response to the captured image that causes movement of the vehicle body, it necessarily discloses element 1g and the corresponding features of claims 2-4.

And implementing this control behavior in Fu would have required no more than routine software configuration within a POSA's skill. Such implementation would reflect only routine, predictable applications of well-known control techniques, requiring no new hardware and instead leveraging Fu's disclosed central processor. A POSA would have thus had a reasonable expectation of success in implementing Fu with the claimed "at least one control signal to cause movement of the body within the swimming pool to, or away from, the first portion of the submerged surface."

277. Accordingly, even if Fu were found not to anticipate, it would have rendered obvious claims 1-4 for at least these reasons.

C. Ground 1c: Claims 1-4 Would Have Been Obvious Over Fu In View Of Benzler

1. Obviousness Of The "To, Or Away From" Limitation Over Fu In View Of Benzler

278. To the extent that Fu alone does not anticipate or render obvious the claimed "at least one control signal to cause movement of the body within the swimming pool to, or away from, the first portion of the submerged surface," claims 1-4 are nonetheless obvious over Fu in combination with Benzler.

279. A POSA would have been motivated to combine Fu and Benzler to yield the claimed control signal for causing movement "to, or away from" a portion of the submerged surface captured by the camera. As detailed in Section XII.A.1.h

above, Fu discloses capturing an image, comparing them to a cleanliness threshold to determine a level of cleanliness, and then planning movement and adjusting the working state of a robot's drive wheels to complete a cleaning task. EX1007, ¶[0026]. Benzler, like Fu, describes an autonomous robotic cleaning system that makes movement and cleaning decisions based on an image of the cleaning surface or work area, including "differently conditioned" sections of the work area. EX1013, Abstract, ¶¶[0016], [0018], [0028], [0037], [0044]-[0046], [0053]. In particular, Benzler describes an activation system for a robotic vehicle 2 that includes (i) a digital camera 8 for capturing an image of the work area, and (ii) a logic unit 10 that evaluates the image to generate driving instructions for the robotic vehicle 2. *Id.*, Abstract.

280. In a "particularly preferred" embodiment, Benzler's robotic vehicle is a "pool-robotic vehicle … in particular as a filter vehicle and/or cleaning or purifying vehicle," which drives on the bottom of a pool to perform its cleaning function. *Id.*, ¶[0028]. Benzler further explains that "the internal or external logic unit automatically calculates a trajectory for the robotic vehicle based on the image data that is in particular continuously determined by the external camera." *Id.*, ¶[0024]. These disclosures confirm that Benzler, like Fu, is directed to an autonomous robotic cleaner that uses image-derived information to guide its movement and cleaning, and in particular, includes an embodiment where the cleaning is performed in a pool

environment using camera-based navigation. The similar disclosures of Fu and Benzler would have motivated a POSA to consider these references together.

281. Benzler further describes embodiments in which the robotic vehicle is implemented as an autonomous lawnmower, a snow cleaning vehicle, a gas collecting vehicle, a thatching vehicle, a weeding vehicle, etc. *Id.*, ¶[0023]. In the autonomous lawnmower embodiment, for instance, "the logic unit … is … construed in such a way that differently conditioned sections (mowed/not mowed) … are detected and the driving instructions are calculated in such a way that preferably the mowed section … is driven along." *Id.*, ¶¶[0018], [0045]. Benzler also discloses that in embodiments, "the logic unit detects differently conditioned sections of the work area, for example a mowed or a not mowed section of the work area based on the image data and then considers this information when calculating the driving instructions, in particular in such a way that the robotic vehicle does only or preferably move on one of those sections, in particular the not mowed lawn section." *Id.*, ¶[0016]. Thus, Benzler uses image-based classification of differently conditioned sections to cause motion "only or preferably" toward target sections and away from non-target sections. *Id.*, ¶¶[0016], [0018], [0045].

282. A POSA would have been motivated to incorporate Benzler's classification-driven motion control into Fu because it is a known technique for improving coverage efficiency and cleaning performance, satisfies design needs to

prioritize dirty areas and reduce redundant cleaning, and represents one of a finite, predictable set of control options once regions are classified with respect to a threshold. Applying Benzler's classification-driven motion to Fu's thresholded cleanliness determinations would have yielded the claimed control signal for causing movement "to, or away from" a portion of the submerged surface captured by the camera, with the robot moving toward sub-threshold (dirtier) regions and away from above-threshold (cleaner) regions. A POSA would also have had a reasonable expectation of success. The combination does not require new hardware or unconventional algorithms; Fu already discloses the cameras, processor, and wheels, and it "plans" movement and "adjusts" wheel states based on cleanliness determinations. Implementing Benzler's classification-based movement entails routine controller configuration that would have been within a POSA's skill.

283. In sum, even if Fu alone were deemed insufficient, the combination of Fu with Benzler renders obvious the "to, or away from" control-signal limitation of claims 1-4 by teaching and motivating the use of image-based region classification to control motion toward target (dirtier) regions and away from non-target (cleaner) regions, with a reasonable expectation of success.

D. Ground 1d: Claim 5 Would Have Been Obvious Over Fu In View Of Hui

1. Independent Claim 5

284. Claim 5 would have been obvious over Fu in view of Hui. The preamble and elements 5a-5c of claim 5 are the same as the preamble and elements 1a-1c of claim 1:

> ~~1~~5. A self-propelled pool cleaner for cleaning debris from a submerged surface of a swimming pool, comprising:
>
> a. a vehicle body;
>
> b. means for moving the vehicle body within the swimming pool;
>
> c. a filter configured to retain debris collected from the submerged surface;
>
> d. a chemical dispenser on, in, or carried by the vehicle body;
>
> ~~d~~e. at least one camera ~~mounted directly or indirectly to the~~on, in, or carried by the vehicle body, for capturing an image of at least a first portion of the submerged surface; and
>
> ~~e~~f. a controller (i) ~~positioned~~ on ~~or~~, in, or carried by the vehicle body, (ii) in electronic communication with the at least one camera~~,~~ and (iii) configured to generate, in response to the captured image, at least one control signal to cause movement of the body within the swimming pool to, or away from, the first portion of the submerged surface.

285. Similarly, elements 5e and 5f are substantially the same as elements 1d and 1e-1g respectively, differing only in wording. *See* Sections XII.A.1.e-h. Therefore, the preamble and elements 5a-5c and 5e-5f are disclosed by Fu for the reasons explained in Ground 1a for claim 1.

286. Claim 5 additionally recites element 5d, analyzed below.

a. Element 5d: "a chemical dispenser on, in, or carried by the vehicle body;"

287. Element 5d would have been obvious over Fu in view of Hui.

288. Hui's pool cleaning vehicle discloses a chemical dispenser 30 that may be "on, in, or carried by" the vehicle body. EX1019, ¶[0012], Figs. 2, 8-9. A POSA would have been motivated to combine Hui's chemical dispenser with Fu's autonomous pool cleaning robot to provide an improved pool cleaning system capable of both mechanical filtration and chemical sanitization. Both Fu and Hui are directed to the same field: automated pool cleaning robots that filter pool water; both share a common functional architecture: a self-propelled underwater vehicle with inlets, outlets, and an internal water flow path where filtration occurs. EX1007, ¶¶[0024], [0026]; EX1019, ¶¶[0046], [0050]-[0051]. Fu's pool cleaning robot comprises a drainage mechanism that draws pool water through water inlet 26 into the robot's water flow channel 24, passes the water through the water flow filter screen 23 to remove debris, and then discharges the filtered water back into the pool. EX1007, ¶¶[0024], [0026].

289. A POSA would recognize that Hui's chemical dispenser enhances Fu's robot by adding a sanitization step with a simple modification. It is commonly known by even laymen that removal of debris alone is insufficient to maintain safe swimming conditions. *Id*. In fact, most swimming pools utilize some method of

water sanitization to eliminate harmful microorganisms, addition of chlorine being the most common method. *Id*. Hui recognizes this need, explaining that "it is simply not enough for the water to be clean or in other words, relatively free of dirt and debris, it must be sanitary." EX1019, ¶[0005]. Accordingly, a POSA would have been motivated to incorporate Hui's chemical dispenser 30 into Fu's autonomous pool cleaning robot to achieve a predictable improvement—a pool cleaning robot that filters as well as sanitizes pool water.

290. A POSA would have had a reasonable expectation of success in combining these references. Fu's robot already provides a water flow path within the water flow channel 24, which is analogous to Hui's water flow path. EX1007, ¶¶[0024], [0026]; EX1019, ¶¶[0046], [0050]-[0051]. A POSA could easily integrate Hui's chemical dispenser 30 within Fu's water flow channel 24 such that the filtered water would pass through the chemical dispenser before being discharged into the pool. Alternatively, a POSA could also mount Hui's chemical dispenser 30 externally to the underwater vehicle as Hui teaches in its embodiments of Figures 8 and 9. Either configuration would expose the pool water to the chemical dispenser 30 in the same manner as in Hui, thereby enhancing Fu's robot to perform both cleaning and sanitizing functions.

291. Accordingly, Fu in view of Hui renders obvious element 5d's "a chemical dispenser [Hui's chemical dispenser 30] on, in, or carried by the vehicle body [robot housing body 1]."

292. Claim 5 would have been obvious over Fu in view of Hui.

E. Ground 1e: Claim 5 Would Have Been Obvious Over Fu In View of Benzler, In Further View Of Hui

293. Claim 5 would have been obvious over Fu and Hui. *See* Ground 1d. However, should the Board find that Fu does not disclose the claimed "at least one control signal to cause movement of the body within the swimming pool to, or away from, the first portion of the submerged surface," claim 5 is nonetheless obvious over Fu in view of Benzler, in further view of Hui. A POSA would have been motivated to combine Fu and Benzler to yield the claimed control signal for causing movement "to, or away from" a portion of the submerged surface for the reasons explained above for Ground 1c. A POSA would further have been motivated to add Hui's chemical dispenser 30 to the Fu/Benzler robot for the reasons stated above in Ground 1d, *e.g.*, to advantageously enable sanitization of the pool water along with filtration.

294. Claim 5 would have been obvious over Fu in view of Benzler, further in view of Hui.

F. Ground 2a: Claims 1, 2, And 4 Would Have Been Obvious Over Schnittman In View Of Benzler

1. Motivations To Combine

295. Schnittman discloses an autonomous cleaning robot 11 with movement and cleaning decisions tied to an image received from a debris sensor, including embodiments where the debris sensor is a camera 1190. EX1008, Abstract, ¶¶[0002], [0004]-[0006], [0045], [0204]. The image may include "detection of debris and/or an obstacle by the camera 1190." *Id.*, ¶[0204]. Schnittman explains that the camera 1190 is in communication with a microprocessor 245, such that movement of the robot 11 over the cleaning surface is based on this image, for *e.g.*, "to avoid obstacles and/or debris large than a specific size," or "to recognize debris on the cleaning surface and maneuver the robot 11 toward the debris." *Id.*

296. Importantly, Schnittman is not limited to any specific environment; its teachings apply generally to cleaning robots that navigate and make cleaning decisions based on an image of the surface being cleaned. This image-based control represented a state-of-the-art approach to autonomous cleaning at the time of the '766 Patent, and a POSA designing a pool-cleaning robot would have recognized that Schnittman's teachings and stated advantages (*e.g.*, robust, debris-responsive cleaning coverage) could be advantageously leveraged in a pool-cleaning context. EX1008, Figs. 10A-10B; ¶¶[0024], [0191]-[0203].

297. The POSA designing a pool-cleaning robot at the time of the alleged invention would have also looked to pool-cleaning literature, like Benzler. Benzler, like Schnittman, describes an autonomous robotic cleaning system that makes movement and cleaning decisions based on an image of the cleaning surface or work area. EX1013, Abstract, ¶¶[0028], [0037], [0044]-[0046], [0053]. In particular, Benzler describes an activation system for a robotic vehicle 2 that includes a digital camera 8 for capturing an image of the work area and a logic unit 10 that evaluates the image to generate driving instructions for the robotic vehicle 2. *Id*., Abstract.

298. In a "particularly preferred" embodiment, the robotic vehicle is a "pool-robotic vehicle … in particular as a filter vehicle and/or cleaning or purifying vehicle," which drives on the bottom of a pool to perform its cleaning function. *Id.*, ¶[0028]. Benzler further explains that "the internal or external logic unit automatically calculates a trajectory for the robotic vehicle based on the image data that is in particular continuously determined by the external camera." *Id.*, ¶[0024]. These disclosures confirm that Benzler, like Schnittman, is directed to an autonomous robotic cleaner that uses image-derived information to guide its movement and cleaning, and in particular, includes an embodiment where the cleaning is performed in a pool environment using camera-based navigation.

299. A POSA would have been motivated to consider Schnittman and Benzler together because they describe similar technology (*e.g.*, autonomous

cleaning robots that employ computer vision) and address the same problem: enabling a robot to make cleaning and navigation decisions based on an image of the cleaning surface. At the time of the '766 Patent, POSAs working in the field of autonomous, image-based cleaning robots, whether for floors, lawns, or pools, were addressing the same core problem: how to use an image to enable a robot to perceive its cleaning surface, and execute cleaning operations autonomously. *Id*. Both Schnittman and Benzler address that problem, and offer complementary, overlapping teachings that a POSA would have recognized as related. *Id*.

300. At the time of the alleged invention (July 2012), a POSA would have understood that the robotics principles underlying such image-based cleaners, like those developed by leading cleaning robot manufacturers such as iRobot (assignee of Schnittman), were readily adaptable to different environments and mediums. Robotics, like any other technology, develops by building on existing technology and adapting existing technology to new contexts. POSAs working in the field of autonomous pool cleaners were not working in isolation; they routinely drew on technologies from the broader field of autonomous cleaning robots. Indeed, Benzler itself confirms this: it describes the same image-driven framework as Schnittman, with Benzler applying this framework to both land and water environments. EX1013, ¶¶[0028], [0037], [0044]-[0046].

301. Benzler would have also reinforced a POSA's understanding that Schnittman's cleaning robot could be advantageously adapted for use in a pool-cleaning context. For example, Benzler's teaching of a "moisture-sealed housing" for the internal logic unit (*id.*, ¶[0011]) explicitly contemplates operation in wet environments, providing a practical implementation detail that a POSA would have readily incorporated when adapting Schnittman's camera-based cleaning robot for underwater use. Likewise, for instance, Benzler's teaching of "pool robotic vehicles [that] drive in particular on the bottom of a pool" using wheels powered by a drive motor (*id.*, ¶¶[0028], [0051], Fig. 3) reinforces that Schnittman's similar motor-powered wheels 45 could be readily adapted for underwater use. Schnittman's image-based debris detection and navigation system, combined with Benzler's known underwater implementation of a similar image-based robotic pool cleaner, would predictably yield an image-based underwater pool cleaner that is driven based on an image of the pool surface.

302. Additionally, Benzler describes other embodiments in which the robotic vehicle is implemented as an autonomous lawnmower, a snow cleaning vehicle, a gas collecting vehicle, a thatching vehicle, a weeding vehicle, etc. *Id.*, ¶[0023]. In the autonomous lawnmower embodiment, for instance, "the logic unit … is … construed in such a way that differently conditioned sections (mowed/not mowed) … are detected and the driving instructions are calculated in

such a way that preferably the mowed section … is driven along." *Id.*, ¶¶[0018], [0045]. Like the pool cleaning vehicle embodiment, this embodiment is based on the same image-driven activation system: the camera captures an image of the work area, and the logic unit interprets the captured image to determine how that area is "conditioned" and where to move next. *Id.*, [0016], [0040]-[0045]. By describing the same image-based system across multiple domains, land and water alike, Benzler demonstrates that a POSA understood how to adapt the principles of image-based robotic navigation and cleaning across various environments and mediums.

303. Furthermore, a POSA would have had a reasonable expectation of success in making this combination. By the time of the '766 Patent, the necessary adaptations to render a system water-ready were straightforward and within a POSA's skill, with such adaptations including moisture-sealing or potting electronics, waterproofing housings, ensuring stable mobility and traction along submerged pool surfaces to counter buoyancy and slippage, and applying known image-processing techniques to extract useful information from underwater camera imagery.

304. For example, in the same period, the use of cameras on underwater vehicles was known (*see, e.g.*, EX1014 ("underwater sediment cleaning apparatus … wherein the controller … comprises: a camera unit controlling an image captured by a camera … wherein the camera unit … [is] connected to the central processing

unit"), EX1015 ("Robotic submersible cleaning system" including "use of an intelligent camera system 81 [to] assist in maintaining the positional accuracy as the HullBUG cleaning system navigates along an underwater surface"), EX1016 ("apparatus and method of … inspecting a submerged surface of a fluid reservoir" including a "navigation camera 6"), and researchers documented techniques to improve the effectiveness of underwater imaging. Literature from around the time of the '766 Patent described various normalization, filtering, and color-space methods that robustly extract target information from underwater environments in real time. *See* EX1017, 7. These developments would have reinforced a skilled artisan's motivation and reasonable expectation of success in adapting Schnittman to Benzler's pool-cleaning context. Thus, a POSA seeking to develop an autonomous pool-cleaning robot would have been motivated to extend the teachings of Schnittman to the underwater context, with Benzler providing clear guidance and confirmation that such an adaption was both known and would be successful.

2. Independent Claim 1

a. Preamble: "A self-propelled pool cleaner for cleaning debris from a submerged surface of a swimming pool, comprising:"

305. To the extent limiting, Schnittman in view of Benzler would have rendered obvious the preamble of claim 1. Schnittman discloses autonomous robotic cleaners for removing debris from cleaning surfaces (*e.g.*, floors). EX1008,

¶¶[0002], [0023], [0033]. For instance, Figure 14D depicts an exemplary autonomous robotic cleaner 11 and its maintenance station 1250 (*id.*, ¶¶[0097], [0216]-[0217]):

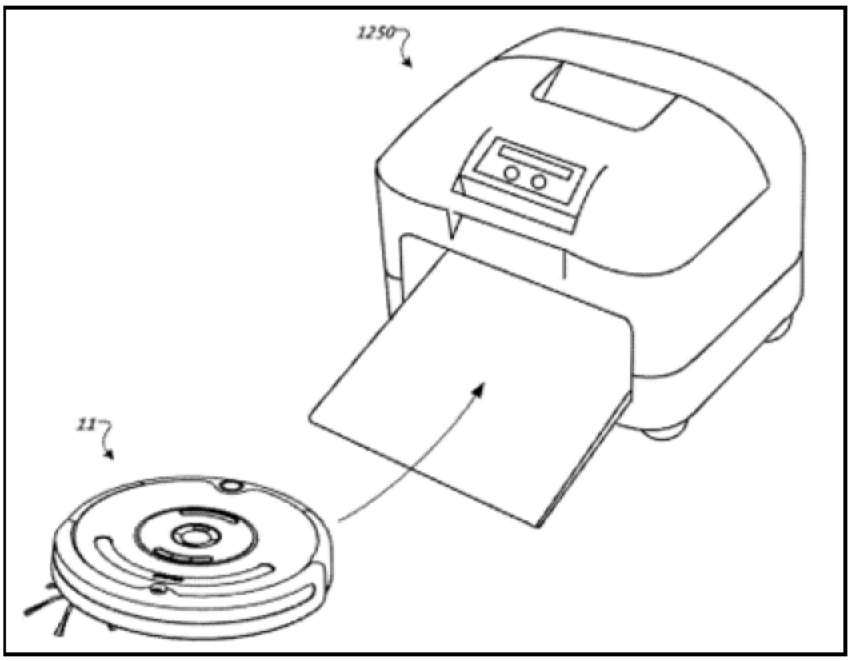

Id., Fig. 14D.

306. In embodiments, Schnittman's autonomous robotic cleaners include "debris agitators," such as brushes, that "sweep or otherwise agitate debris from the cleaning surface." *Id.*, ¶¶[0026], [0027], [0031], [0115], [0119], [0128], [0130]-[0131]. Schnittman thus discloses autonomous robotic cleaners "for cleaning debris from a … surface," as recited in the preamble.

307. Further, Schnittman's autonomous robotic cleaners are "self-propelled" because they include an onboard drive system and wheels that move and steer the robot without external propulsion. *See, e.g.*, *id.*, ¶¶[0005] ("The drive system is

coupled to the housing and configured to maneuver the robot across a cleaning surface."), [0112] ("installed along either side of the robot body 31 are differentially driven wheels 45, each rotatable about a transverse axis, to mobilize the robot 11"), [0119] ("right and left wheel motors" for the respective "right and left differentially driven wheels 45"). In embodiments, power for moving Schnittman's autonomous robotic cleaners is provided via an onboard battery that is charged at a maintenance station (*e.g.*, the maintenance station 1250 shown above). *Id.*, ¶¶[0048], [0050], [0054], [0115], [0118], [0216]-[0217], [0221], [0227], [0230].

308. Thus, Schnittman's autonomous robotic cleaners disclose a "self-propelled … cleaner for cleaning debris from a … surface," and as explained above, a POSA would have been motivated to apply Schnittman's teachings in the pool-cleaning context for cleaning submerged surfaces in view of Benzler. Section XII.F.1. Therefore, Schnittman in view of Benzler renders obvious the "self-propelled pool cleaner for cleaning debris from a submerged surface of a swimming pool" recited in the preamble.

b. Element 1a: "a vehicle body;"

309. Schnittman discloses element 1a of claim 1. Schnittman states that embodiments of its autonomous robotic cleaners include "a robot body 31 (*e.g.*, a chassis and/or housing) which carries an outer shell 6 connected to a bumper 5" (EX1008, ¶[0111]):

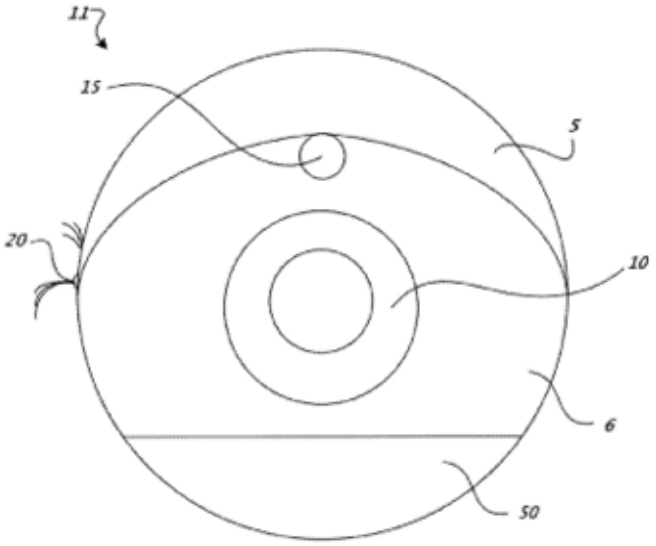

FIG. 1A

Id., Fig. 1A.

310. In embodiments, the robot body 31 "carries a control panel 10 and an omnidirectional receiver 15, which has a 360 degree line of vision for detection of signals emitted towards the robot 11 from substantially all directions." *Id.*, ¶[0111].

311. Schnittman's robot body 31 discloses the claimed "vehicle body."

c. Element 1b: "means for moving the vehicle body within the swimming pool;"

312. Schnittman in view of Benzler discloses or would have rendered obvious element 1b of claim 1. As explained in Section VIII above, "means for moving the vehicle body within the swimming pool" is an MPF term, and the corresponding structures disclosed in the '766 Patent include "wheels, rollers, tracks or other surface contacting members powered by a motor and the like." EX1003, 3:31-43.

313. Schnittman discloses "moving the vehicle body" and a corresponding structure described in the '766 Patent. As explained above for the preamble of claim 1, Schnittman's autonomous robotic cleaners include an onboard drive system (also referred to as a "drive assembly") for moving the robot, including its body. EX1008, ¶¶[0005], [0040], [0044], [0119], [0177]. The drive system "includes right and left differentially driven wheels 45, right and left wheel motors, and wheel encoders" in embodiments (*id.*, ¶[0119]):

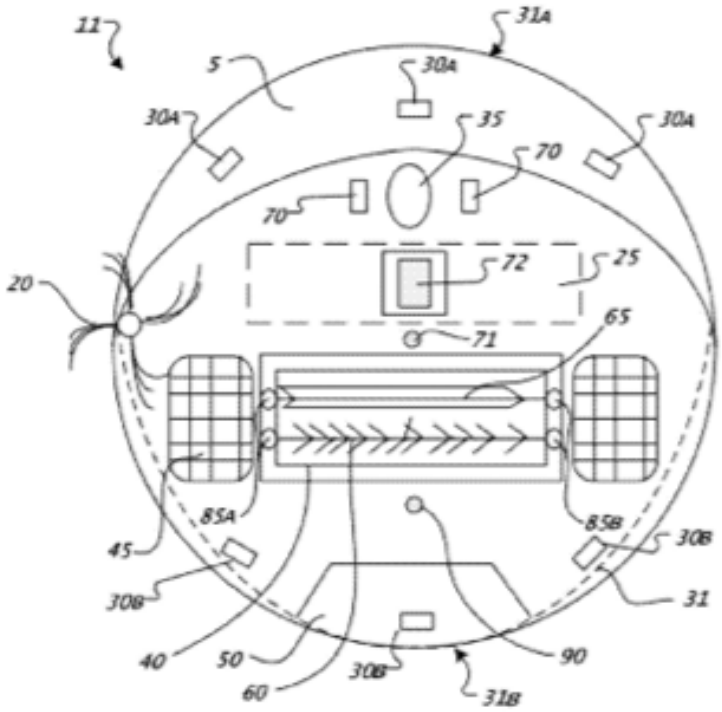

FIG. 1B

Id., Fig. 1B.

314. Schnittman's "drive system is coupled to the [robot's] housing and configured to maneuver the robot across a cleaning surface." *Id.*, ¶[0005]. Further, the drive system is "operable to receive commands from the microprocessor 245"

for controlling the movement of the robot. *Id.*, ¶¶[0119], [0177]. Schnittman thus discloses the claimed function ("moving the vehicle body"), and Schnittman's wheels 45 powered by right and left wheel motors disclose a corresponding structure described in the '766 Patent for performing this function.

315. While Schnittman does not disclose moving its autonomous cleaning robots "within [a] swimming pool" specifically, as explained above, a POSA would have been motivated to apply Schnittman's teachings in the pool-cleaning context in view of Benzler. Section XII.F.1. For instance, Benzler's teaching of "pool robotic vehicles [that] drive in particular on the bottom of a pool" using wheels powered by a drive motor (*id.*, ¶¶[0028], [0051], Fig. 3) provides a drive system similar to that of Schnittman, reinforcing that Schnittman's similar motor-powered wheels 45 could be readily adapted for underwater use. Therefore, Schnittman in view of Benzler renders obvious the "means for moving the vehicle body within the swimming pool (drive system)."

d. Element 1c: "a filter configured to retain debris collected from the submerged surface;"

316. Schnittman in view of Benzler discloses or would have rendered obvious element 1c of claim 1. Schnittman discloses that embodiments of its autonomous robotic cleaners include an "internal filter 54" (EX1008, ¶[0117]):

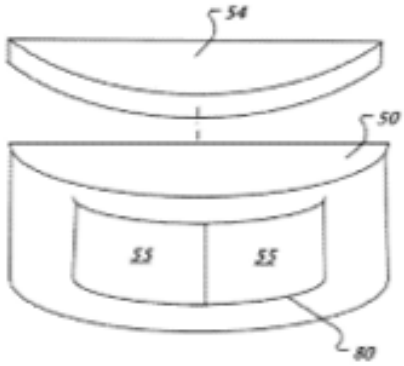

FIG. 1C

Id., Fig. 1C; *see also id.*, ¶¶[0120]-[0124], [0129].

317. Schnittman's internal filter 54 is configured to retain debris collected from a cleaning surface, such as a "submerged surface" in a pool-cleaner implementation of Schnittman's robotic cleaner in view of Benzler. In embodiments, the internal filter 54 is part of the robot's cleaning bin 50, with the internal filter 54 retaining collected debris. EX1008, ¶¶[0117], [0121], [0123]-[0124] (internal filter must be cleaned to remove collected debris), [0129], [0242], [0248]. A pool-cleaner implementation of Schnittman would include a filter like that described in Schnittman, with the filter retaining debris collected by the robot while passing filtered, clean water back into the swimming pool. Such on-board filters for pool-cleaning robots were well-known at the time of the alleged invention, and a POSA would have understood how to modify or replace Schnittman's filter for use in Benzler's pool-cleaning context. A POSA's motivation for making such modifications is explained above in Section XII.F.1. Therefore, Schnittman in view

of Benzler renders obvious "a filter [internal filter 54] configured to retain debris collected from the submerged surface."

e. Element 1d: "at least one camera mounted directly or indirectly to the body for capturing an image of at least a first portion of the submerged surface; and"

318. Schnittman in view of Benzler discloses or would have rendered obvious element 1d of claim 1. Schnittman discloses that embodiments of its autonomous robotic cleaners include a camera, such as the exemplary camera 1190 of Figure 11:

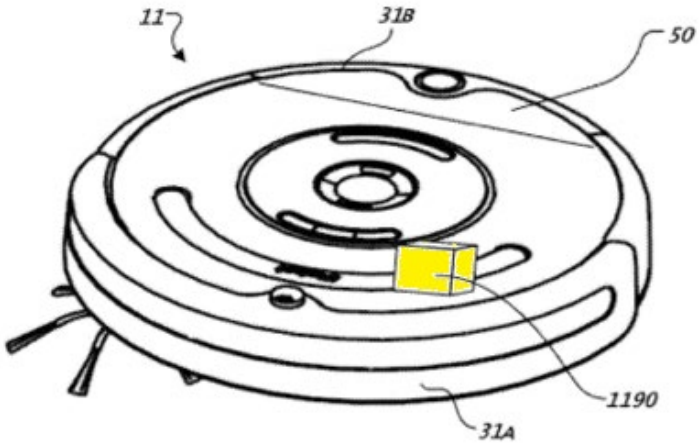

FIG. 11

EX1008, Fig. 11; *see also id.*, ¶¶[0045], [0204]-[0205].

319. As seen above, Schnittman's camera is mounted on or in the body of the robot. *Id.*, ¶[0204] ("Referring to FIG. 11, in some implementations, the robot 11 includes a camera 1190 disposed toward the forward portion of the robot 11, with a field of view beyond the perimeter of the robot 11."). The camera captures an

image of at least a first portion of a cleaning surface. Specifically, the camera "scan[s] an area substantially forward of the [robot]" as the "robot [moves] over the cleaning surface." EX1008, ¶¶[0045], [0204]. The camera is "in communication with [a] microprocessor 245," and the "microprocessor 245 … process[es] [a] signal from the camera … to recognize debris on the cleaning surface and maneuver the robot 11 toward the debris." *Id.*, ¶[0204]. A POSA would have thus understood that Schnittman's camera captures an image of at least a portion of the cleaning surface: The microprocessor could not "recognize debris on the cleaning surface" absent an image of the cleaning surface captured by the camera.

320. While Schnittman does not disclose capturing an image of a "submerged [underwater] surface" specifically, a pool-cleaner implementation of Schnittman in view of Benzler would capture such an image, and a POSA would have been motivated to pursue such an implementation for the reasons in Section XII.F.1 above. Accordingly, Schnittman in view of Benzler renders obvious the claimed "at least one camera [camera 1190] mounted directly or indirectly to the body for capturing an image of at least a first portion of the submerged surface."

f. Element 1e: "a controller (i) positioned on or in the body,"

321. Schnittman discloses element 1e of claim 1. Schnittman discloses that embodiments of its autonomous robotic cleaners include a microprocessor, an example of which is the microprocessor 245 of Figure 2 (EX1008, ¶[0118]):

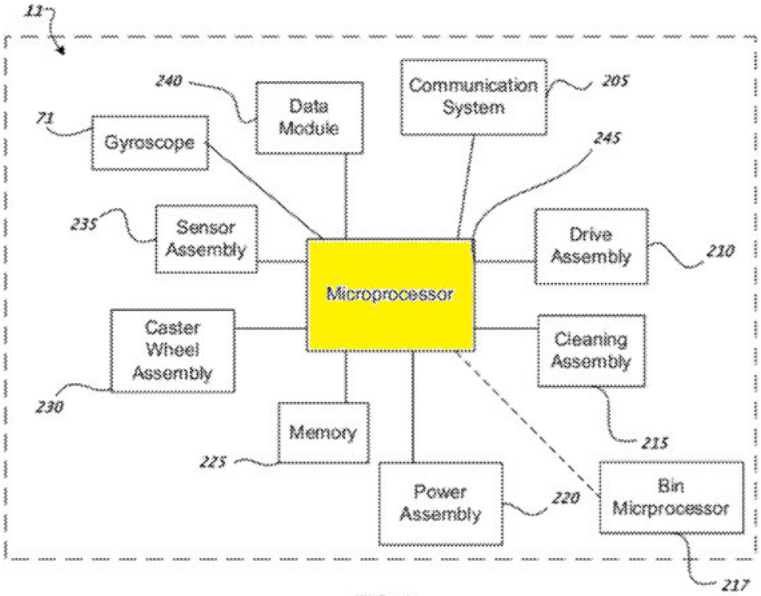

FIG. 2

Id., Fig. 2.

322. Schnittman's microprocessors are "capable of executing routines and generating and sending control signals" for "controlling [the robot's] drive assembly" and other components. *Id.*, ¶¶[0118]-[0119], [0177]. In the example of Schnittman's Figure 2, the routines executed by the microprocessor 245 are stored in the memory 225, and a data module 240 is configured to "upload new software routines or values to the robot 11." *Id.*, ¶[0118]. Schnittman's microprocessor discloses the claimed "controller" because it controls operation of the autonomous cleaning robot and is similar to controllers described in the '766 Patent. For instance, the '766 Patent describes that its controller may be implemented using "one or more processing units … that execute[] sequences of instructions contained in a memory," with the execution of such sequences "caus[ing] the processing unit to perform steps

such as generating control signals." EX1003, 4:16-26 ("The instructions may be loaded in a random access memory (RAM) for execution by the processing unit from a read only memory (ROM), a mass storage device, or some other persistent storage."). Schnittman's microprocessor 245 likewise executes routines stored in memory to generate control signals for controlling the robot, and the microprocessor 245 thus discloses the claimed "controller." EX1008, ¶¶[0118]-[0119], [0177].

323. Schnittman's microprocessor 245 is also positioned on or in the body of the robot, as claimed. In the example of Figure 2, the microprocessor 245 is part of the robot 11, and thus would be positioned on or in the robot's body. EX1008, ¶¶[0118] ("The robot 11 includes a microprocessor 245 …."). Further, Schnittman states that the microprocessor is "included within the robot 11." *Id.* Therefore, Schnittman's microprocessor 245 teaches "a controller" that is "positioned on or in the body."

g. Element 1f: "[the controller] (ii) in electronic communication with the at least one camera, and"

324. Schnittman discloses element 1f of claim 1. Schnittman discloses that its microprocessor (*i.e.*, "controller") is in communication with the robot's camera and configured to process signals from the camera: "[C]amera 1190 can be in communication with the microprocessor 245 …. [T]he microprocessor 245 can process the signal from the camera 1190 to recognize debris on the cleaning surface

and maneuver the robot 11 toward the debris. Additionally or alternatively, the microprocessor 245 can process the signal from the camera 1190 to recognize obstacles and/or debris in the vicinity of the robot 11 and maneuver the robot 11 to avoid obstacles and/or debris ….” EX1008, ¶¶[0204]-[0205]. Schnittman thus discloses the claimed controller (microprocessor 245) “in electronic communication with the at least one camera [camera 1190].”

h. Element 1g: “[the controller] (iii) configured to generate, in response to the captured image, at least one control signal to cause movement of the body within the swimming pool to, or away from, the first portion of the submerged surface.”

325. Schnittman discloses or would have rendered obvious element 1g of claim 1. Schnittman discloses that its microprocessor (“controller”) generates commands (“control signals”) to cause movement of the robot and its body: “The drive assembly 210 is connected to the microprocessor 245” and “is operable to receive commands from the microprocessor 245.” EX1008, ¶[0119]; *see also id.*, ¶[0177] (“The microprocessor [245] can move the robot 11 through one or more of the spot coverage patterns below aby controlling the drive assembly 210 based at least in part on a signal received from the gyroscope 71.”). The control signals generated by Schnittman’s microprocessor can cause the robot to move based on detected debris and/or in different cleaning patterns, including those of Figures 10A and 10B (*id.*, ¶¶[0177], [0191]-[0203]):

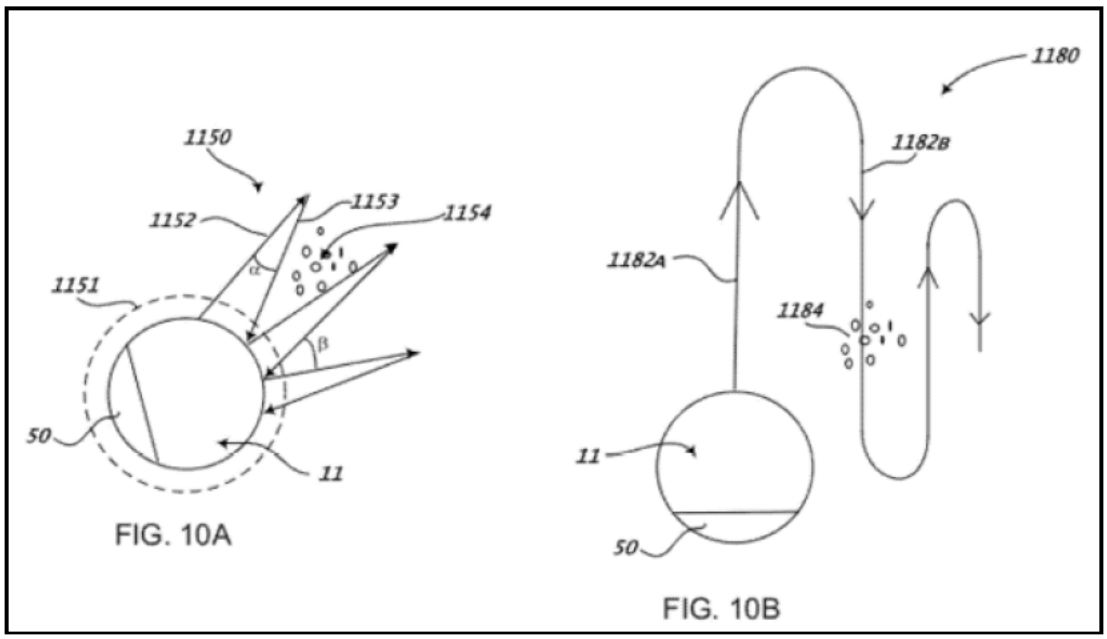

Id., Figs. 10A, 10B.

326. Accordingly, Schnittman discloses the claimed controller configured to generate control signals to cause movement of the robot's body.

327. Schnittman further discloses the generation of such control signals "in response to the captured image." Schnittman states that its camera "can be in communication with the microprocessor 245 such that the movement of the robot 11 over the cleaning surface can be based at least in part on the detection of debris and/or an obstacle by the camera 1190." EX1008, ¶[0204]. Schnittman further explains that its microprocessor "can process the signal from the camera" and control movement of the robot accordingly. *Id.*, ¶¶[0204]-[0205]. A POSA would thus understand that Schnittman's microprocessor generates control signals for moving the robot based on ("in response to") the image captured by the robot's camera. Such

control signals "cause movement of the [robot's] body … to, or away from, the first portion of the … surface," as claimed:

> [T]he microprocessor 245 can process the signal from the camera 1190 to recognize debris on the cleaning surface and ***maneuver the robot 11 toward the debris***. Additionally or alternatively, the microprocessor 245 can process the signal from the camera 1190 to recognize obstacles and/or debris in the vicinity of the robot 11 and ***maneuver the robot 11 to avoid obstacles and/or debris*** larger than a specific size threshold (e.g., a value less than about the smallest opening defined by the cleaning head).

EX1008, ¶¶[0204]-[0205].

328. The image captured by Schnittman's camera depicts a portion of the cleaning surface (*see* Element 1d above), and the microprocessor processes the image to recognize debris in it. Based on the recognized debris in the image, the microprocessor generates control signals for moving the robot toward or away from the portion of the cleaning surface having the recognized debris. *Id.* Accordingly, Schnittman discloses the claimed controller "configured to generate, in response to the captured image, at least one control signal to cause movement of the body … to, or away from, the first portion of the [cleaning] surface."

329. While Schnittman does not disclose the generation of control signals for causing movement "within the swimming pool" and toward a portion of a "submerged [underwater] surface," specifically, a POSA would have understood, in view of Benzler, how to adapt Schnittman's autonomous robotic cleaners for use in this context and would have been motivated to do so for the reasons in Section

XII.F.1 above. Therefore, Schnittman in view of Benzler renders obvious "a controller [microprocessor 245]" "configured to generate, in response to the captured image, at least one control signal to cause movement of the body within the swimming pool to, or away from, the first portion of the submerged surface."

330. Schnittman in view of Benzler renders obvious claim 1 of the '766 Patent.

3. Independent Claim 2

331. Claim 2 is unpatentable over Schnittman in view of Benzler for the reasons explained above for claim 1. *See also* Section XII.A.2.

4. Independent Claim 4

332. Claim 4 is unpatentable over Schnittman in view of Benzler for the reasons explained above for claim 1. *See also* Section XII.A.4.

G. Ground 2b: Claim 3 Would Have Been Obvious Over Schnittman In View Of Benzler, In Further View Of Bailey

1. Independent Claim 3

333. As shown in Ground 1a (Section XII.A.3.), claim 3's preamble and elements 3a-3d are substantially the same as claim 1's preamble and elements 1a-1d. Therefore, the preamble and elements 3a-3d are obvious over Schnittman in view of Benzler for the reasons explained in Ground 2a. Section XII.F.2.

a. Element 3e: "a controller (i) positioned on or in the body,"

334. Element 3e of claim 3 is obvious over Schnittman in view of Benzler for the reasons explained above for element 1e of claim 1. Section XII.F.2.f.

b. Element 3f: "[the controller] (ii) in electronic communication with the at least one camera and a portable electronic device, and"

335. Element 3f is obvious over Schnittman in view of Benzler, in further view of Bailey.

336. For the reasons explained above for element 1f of claim 1, Schnittman makes obvious the claimed controller (microprocessor 245) "in electronic communication with the at least one camera [camera 1190]." Section IV.F.4.g. Further, Schnittman discloses "a portable electronic device" in "electronic communication with" the controller. For example, Schnittman discloses a "remote indicator 1202" that includes "a function button 1210, which transmits a command to the robot 11 when activated. In some examples, the remote indicator 1202 includes an acknowledge button 1212 that transmits an appropriate command signal to the mobile robot 20 when pushed. For example, when a bin-full signal is received, the LCD display 1206 may display a message indicating to the user that the bin is full. The user may then press the button 1212, causing a command to be transmitted to the robot 11 that in turn causes the robot 11 to navigate to a particular location." EX1008, ¶[0214].

337. In addition, Bailey provides the complementary teaching of "a portable electronic device" "in communication with" the controller. Bailey's management station 112, which may be implemented as "workstations, desktop computers, laptop computers or other personal computers," provides a user interface for remotely monitoring and interacting with the robot. EX1018, 3:23-30, 7:23-51. The management station 112 is remote from the robot 102, and it communicates with the onboard control engine 300 through standard technologies such as a "wireless network interface card (NIC), an Ethernet-based NIC, a Bluetooth interface or an infra red (IR) interface," or "a wireless data connection … 350." *Id.*, 3:37-40, 7:5-10, Fig. 1.

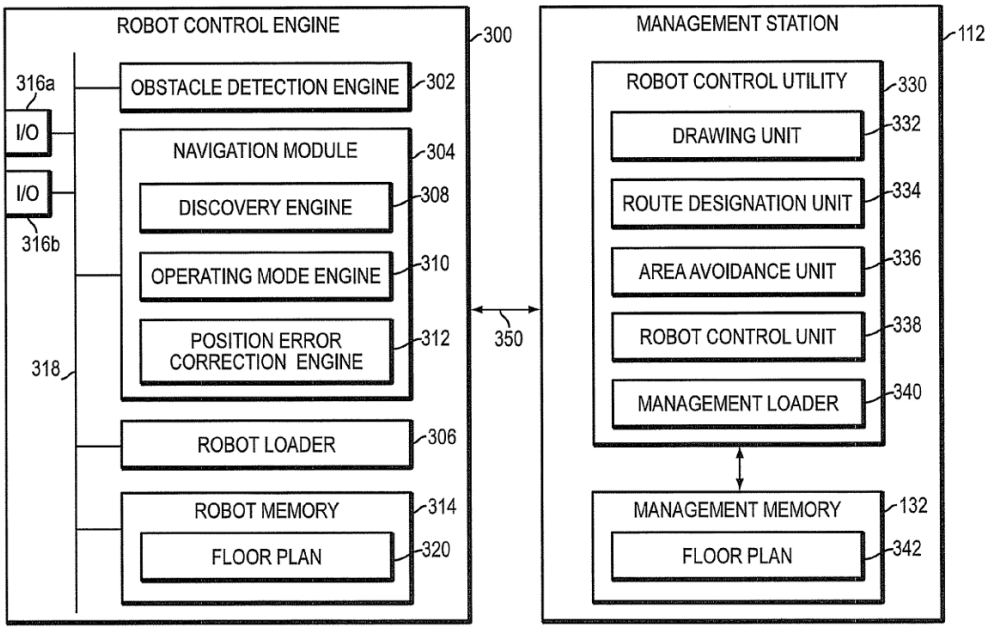

FIG. 3

EX1018, Fig. 3 (showing wireless data connection 350 between the control engine 300 and the management station 112).

338. Bailey further explains that the management station 112 may include "a central processing unit (CPU) 130, a memory 132, a display screen 134, one or more input devices, such as keyboard 136 and a mouse 138" that allow a user to interact with the robot 102 via a GUI 1400. *Id*., 3:15-22, 7:23-51. "In an embodiment, the user may direct the motion of the robot 102 in real-time using the robot GUI 1400, as a remote control … from the management station 112." *Id*., 16:26-35. The management station 112 thus enables a user to remotely communicate with the robot 102 regarding, for *e.g.*, floor plans, navigation commands, cleaning instructions, etc. *Id*., 7:3-12, 7:23-51. Bailey further teaches that "a hand-held remote control unit (not shown) may be operated by the user to direct the motion of the robot 102," emphasizing the portability and remote nature of the management station 112. *Id*., 16:26-35

339. Bailey's management station 112 thus discloses the claimed "portable electronic device [management station 112]" that is "in electronic communication with" "a controller." A POSA would have been motivated to apply Bailey's management station 112 to the Schnittman/Benzler image-based underwater pool cleaner. Like Schnittman and Benzler, Bailey discloses an autonomous cleaning robot that navigates the cleaning space, such as a swimming pool, using sensor-based

perception and an onboard control engine. EX1014, 1:29-32, 3:46-49, 3:51-4:25, 9:48-65, 17:26-29. Bailey's additional teaching of a portable, remote user interface provides a complementary feature that enables user interaction, monitoring, and real-time control—functionalities that would have been naturally desirable to extend to an autonomous pool cleaning robot. Combining Bailey with the Schnittman/Benzler pool cleaning robot would therefore have yielded a predictable and advantageous configuration: an image-guided, autonomous pool cleaning robot whose onboard controller communicates with a portable electronic device (Bailey's management station 112) for user monitoring and control.

340. A POSA would have recognized the clear advantages of this combination. Bailey demonstrates that providing a remote management interface allows for convenient user input, remote monitoring, and real-time user control of the robot's navigation and cleaning. These advantages would have been particularly beneficial in the underwater pool cleaning context, where direct physical access to the robot or its onboard controls is impractical once the robot is submerged. For example, a user might wish to initiate or pause a cleaning cycle, redirect the robot to an uncleaned area, or retrieve diagnostic information if anything goes wrong, all of which are functions that could be conveniently performed through Bailey's management station 112.

341. Furthermore, Bailey explicitly references multiple iRobot cleaning platforms (*e.g.*, Roomba®, Home Base®, Create®) as suitable and known mobile robot implementations. EX1018, 1:11-16, 3:41-45, 4:53-58. Because iRobot is also the assignee of Schnittman, a POSA would have understood Bailey's and Schnittman's teachings as complementary and compatible technologies arising from the same field of autonomous cleaning robotics. This cross-reference would have reinforced a POSA's expectation that Bailey's management station 112 could be readily applied to Schnittman's image-based cleaning robot, including when adapted for a pool environment as taught by Benzler, particularly since Bailey itself states that the mobile robot 102 may be implemented as a pool cleaning robot. EX1014, 17:26-29.

342. A POSA would have had a reasonable expectation of success in combining these references. By 2012, remote communication between a robot and a portable device was routine and well established, using mature technologies such as Bluetooth, wireless network, or infrared interfaces, all of which Bailey discloses. Implementing Bailey's management station 112 into the Schnittman/Benzler device would have required only conventional hardware and software integration, well within the skill of a POSA. The necessary adaptations for underwater use, such as waterproofing and sealing, were likewise straightforward engineering tasks known to POSA.

343. Accordingly, Schnittman in view of Benzler, in further view of Bailey makes obvious the claimed controller (microprocessor 245) "in electronic communication with the at least one camera [camera 1190] and a portable electronic device [management station 112]."

c. Element 3g: "[the controller] (iii) configured to generate, in response to at least one of the captured image or information from the portable electronic device, at least one control signal to cause movement of the body within the swimming pool to, or away from, the first portion of the submerged surface."

344. Element 3g is obvious over Schnittman in view of Benzler, in further view of Bailey.

345. For the reasons explained above for element 1g of claim 1, Schnittman in view of Benzler makes obvious that the controller (microprocessor 245) is "configured to generate, in response to at least one of the captured image …, at least one control signal to cause movement of the body within the swimming pool to, or away from, the first portion of the submerged surface." Section XII.F.2.h.

346. As explained for element 3f, Bailey further teaches that its management station 112, which is in communication with the onboard control engine 300, allows a user to interact with and control the cleaning robot. EX1018, 7:5-10, 16:26-35 ("the user may direct the motion of the robot 102 in real-time using the robot GUI 1400 [on management station 112], as a remote control"), Figs. 1, 3. A user may direct the robot in real time through the management station 112, *i.e.*, the portable

electronic device, with those directions being transmitted to the control engine 300 wirelessly and being used to control the robot accordingly. *Id*., 3:37-40, 7:5-10, 7:23-51, 16:26-35.

347. Therefore, Schnittman in view of Benzler, in further view of Bailey, discloses that the controller (microprocessor 245) is "configured to generate, in response to at least one of the captured image [image captured by camera 1190] or information from the portable electronic device [management station 112], at least one control signal to cause movement of the body [robot body 31] within the swimming pool to, or away from, the first portion of the submerged surface."

348. Thus, claim 3 would have been obvious over Schnittman in view of Benzler, in further view of Bailey.

H. Ground 2c: Claim 5 Would Have Been Obvious Over Schnittman In View Of Benzler, In Further View Of Hui

1. Independent Claim 5

349. As shown in Ground 1d, claim 5's preamble, and elements 5a-5c and 5e-5f are substantially the same as claim 1's preamble, and elements 1a-1g. Section XII.D.1. Therefore, claim 5's preamble and elements 5a-5c and 5e-5f are obvious over Schnittman in view of Benzler for the reasons explained in Ground 2a. Section XII.F.2.

350. Claim 5 additionally recites element 5d, analyzed below.

a. Element 5d: "a chemical dispenser on, in, or carried by the vehicle body;"

351. Element 5d would have been obvious over Schnittman in view of Benzler, further in view of Hui.

352. As explained above, Hui's pool cleaning vehicle discloses a chemical dispenser 30 that may be "on, in, or carried by" the vehicle body. Section X.D. A POSA would have been motivated to combine Hui's chemical dispenser with the Schnittman/Benzler image-based underwater pool cleaner to provide an improved automated pool cleaning system capable of performing both mechanical filtration and chemical sanitization. Like the Schnittman/Benzler device, Hui is also directed to automated pool cleaning robots. EX1019, Abstract, ¶[0001]. When adapting Schnittman's cleaning robot for underwater operation as taught by Benzler, a POSA would know that adding a chemical-dispenser function, specifically for swimming pool environments, is a predictable step. A POSA would naturally incorporate a known chemical-dispensing element into the Schnittman/Benzler autonomous pool cleaning device because pool sanitation using chemicals, such as chlorine, has been widely known and implemented since before the '766 Patent. A POSA would therefore recognize that Hui's chemical dispenser enhances the Schnittman/Benzler system by adding a known and desirable sanitization function through a straightforward modification.

353. A POSA would have had a reasonable expectation of success in combining these references. Hui teaches that its chemical dispenser 30 may be mounted externally on the robot body, as illustrated in the embodiments of Figures 8 and 9. EX1019, Figs. 8-9. A POSA could therefore add Hui's chemical dispenser to the exterior of the Schnittman/Benzler device without altering the underlying architecture of the device. Simply mounting the chemical dispenser to the housing would expose the chemical dispenser to the pool water in the same manner as taught by Hui.

354. Alternatively, Hui also teaches that the chemical dispenser may be integrated within the robot body. Incorporating the chemical dispenser in this manner with the Schnittman/Benzler device would likewise have been a routine modification well within a POSA's skillset. As explained above, at the time of the '766 Patent, pool cleaners incorporating chemical-dispensing components (*e.g.*, chlorine) were well-known and widely used. Thus, adding Hui's chemical dispenser, whether internally or externally, would require only a straightforward application of known methods.

355. Accordingly, Schnittman in view of Benzler, in further view of Hui renders obvious element 5d's "chemical dispenser [chemical dispenser 30] on, in, or carried by the vehicle body [robot body 31]."

356. Schnittman in view of Benzler, further in view of Hui renders obvious claim 5.

XIII. ANALYSIS OF THE ’207 PATENT

A. Ground 1a: Fu Anticipates Claims 1-3, 5-8, 12-14, And 19

357. In my opinion, as set forth below, claims 1-3, 5-8, 12-14, And 19 of the ’207 patent are unpatentable as being anticipated by Fu.

1. Claim 1

358. In my opinion, as set forth below, claim 1 of the ’207 patent is unpatentable as being anticipated by Fu.

a. Preamble: “A self-propelled pool cleaning system for cleaning debris from a submerged surface of a swimming pool, comprising:”

359. To the extent limiting, the preamble of claim 1 is disclosed by Fu. Fu discloses “an underwater cleaning robot” designed “for the underwater cleaning of swimming pool floors and walls.” EX1007, Abstract. An example of Fu’s underwater cleaning robot is depicted in Figure 1:

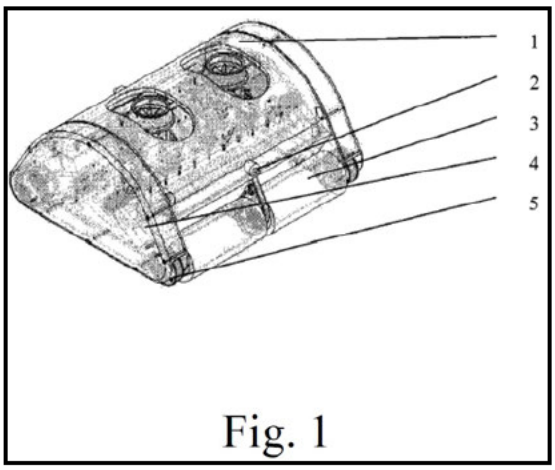

Fig. 1

Id., Fig. 1.

360. Fu's robot includes, among other components, "a drainage mechanism [and] a cleaning and mobility platform." *Id.*, ¶[0024]. The cleaning and mobility platform enables the robot to move around the pool and remove debris from its surfaces, *e.g.*, using brushes. *Id.*, ¶¶[0010], [0024]-[0026] ("brush-cleaning"). The drainage mechanism "draws pool water from the bottom of the robot" such that the "water passes through the water flow filter screen 23, which filters out debris, and the clean water is then discharged." *Id.*, ¶[0026]. Thus, Fu's underwater cleaning robot is "for cleaning debris from a submerged surface of a swimming pool."

361. Fu further discloses that its robot is self-propelled. The robot's cleaning and mobility platform comprises "four independent cleaning driving wheels 3" that "are controlled by their respective motor drivers, allowing for independent movement." *Id.*, ¶[0026]. In the autonomous mode, "control signals are generated by the central processor, which autonomously plans paths and actions … to drive the

robot's execution layer and complete the underwater cleaning task." *Id*., ¶[0025]. The execution layer comprises the motor drivers and the cleaning driving wheel DC motors 7, which drive the cleaning driving wheels 3. *Id*., ¶[0024]. Fu's robot is thus "self-propelled" because it moves without external propulsion. Fu also describes various components for powering such movement, including an onboard "rechargeable battery box." *Id.*, ¶¶[0007], [0008], [0024], [0025].

362. As detailed below for elements 1a-1f, Fu's underwater cleaning robot discloses all the features recited in claim 1 ("vehicle body," "means for moving the vehicle body," "filter," "at least one camera," and "controller"), and thus discloses the "pool cleaning system" recited in the preamble.

363. For at least these reasons, Fu discloses the claimed "self-propelled pool cleaning system [underwater cleaning robot] for cleaning debris from a submerged surface of a swimming pool."

b. Element 1a: "a vehicle body;"

364. Fu discloses element 1a of claim 1. As shown in Figure 1, Fu illustrates the "[o]verall schematic diagram of the underwater cleaning robot," which includes "1 - robot housing body" (EX1007, ¶[0014]):

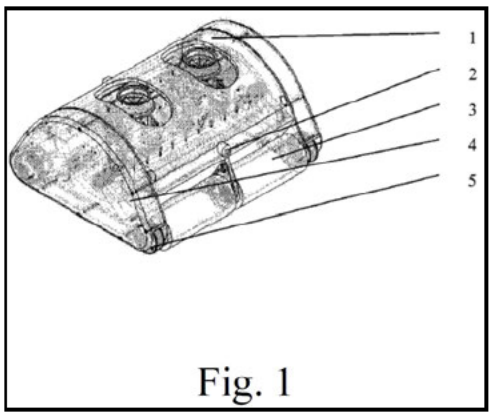

Fig. 1

Id., Fig. 1.

365. Fu further specifies that the "housing body 1 comprises a robot top cover 18, robot side walls 20, and a robot main housing body 19." *Id*., ¶[0024].

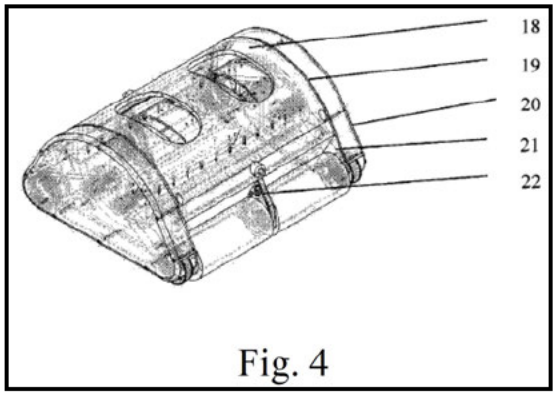

Fig. 4

Id., Fig. 4.

366. Accordingly, Fu discloses the claimed "vehicle body [robot housing body 1]."

c. Element 1b: "means for moving the vehicle body within the swimming pool;"

367. Fu discloses element 1b of claim 1. As explained in Section VIII above, "means for moving the vehicle body within the swimming pool" is an MPF term,

and the corresponding structures disclosed in the ’207 Patent include “wheels, rollers, tracks or other surface contacting members powered by a motor and the like.” EX1005, 3:31-43.

368. Fu discloses “moving the vehicle body” and a corresponding structure described in the ’207 Patent. Specifically, Fu’s robot comprises a cleaning and mobility platform that enables controlled movement of the robot body. EX1007, ¶[0024]. The cleaning and mobility platform, illustrated in Figure 1 reproduced above, comprises “a robot housing body 1, cleaning driving wheels 3, synchronous belt gears 5, and a driving synchronous belt 4.” *Id.* A driving DC motor 7 drives the cleaning driving wheels 3 via the synchronous belt gears 5 and the driving synchronous belt 4. *Id*., ¶¶[0007], [0024] (“Said cleaning driving wheel DC motors [7] are equipped with reduction gearboxes and encoders. They are installed and fixed via front flanges to the side wall of the driving and control sealed housing and the side wall of the robot main housing body [19], and they drive the cleaning driving wheels [3] via synchronous belt gears [5] and synchronous belts [4].”).

369. Further, the cleaning driving wheels 3 “are controlled by their respective motor drivers, allowing for independent movement.” *Id.*, ¶[0026], Fig. 1. “By using different combinations of wheel speeds, the robot can perform tasks such as moving forward, backward, turning, and brush-cleaning.” *Id*, ¶[0026]. Fu thus discloses the claimed function (“moving the vehicle body within the swimming

pool"), and Fu's driving wheels 3 powered by cleaning driving wheel DC motors 7 disclose a corresponding structure described in the '207 Patent for performing this function.

370. In sum, Fu teaches the claimed "means for moving the vehicle body within the swimming pool [driving wheels 3 powered by cleaning driving wheel DC motors 7]."

d. Element 1c: "a filter configured to retain debris collected from the submerged surface;"

371. Fu discloses element 1c of claim 1. Fu's underwater cleaning robot includes a "drainage mechanism" that is designed to draw in pool water, filter out debris from the water, and discharge the filtered water while retaining the debris. EX1007, ¶¶[0024]-[0026]. An example schematic of the drainage mechanism is illustrated in Figures 3 and 5:

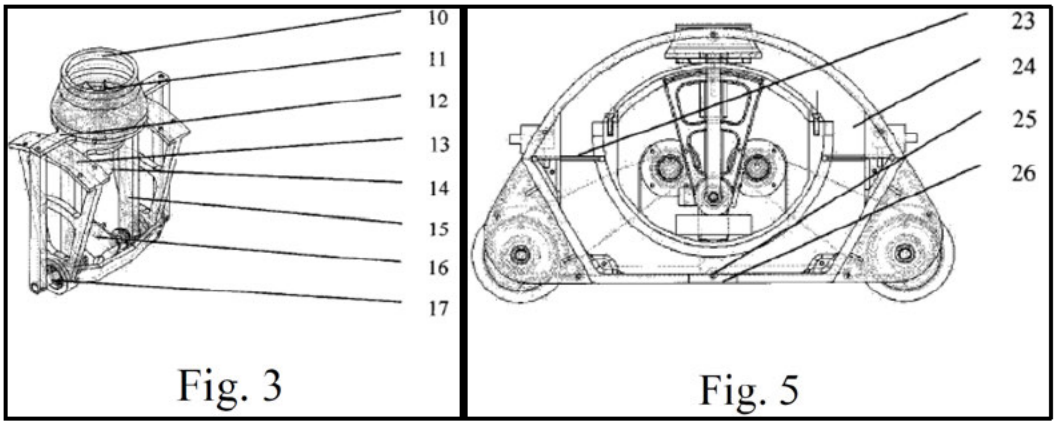

Id., Fig. 3 (water discharger), Fig. 5.

372. The drainage mechanism "comprises a water discharger, a water flow channel 24 …, a water flow filter screen 23, and a water inlet [26] with an anti-backflow device 25." *Id*, ¶[0024]. During operation, "the drainage propeller high-speed DC motor 14 … drives the drainage propeller 11 to rotate … expel[ling] water from within the robot's water flow channel 24, creating a high negative pressure inside." *Id.*, ¶[0026]. This negative pressure "draws pool water from the bottom of the robot into the water flow channel 24 through the water inlet [26]." *Id*. Once in the flow channel 24, the "water passes through the water flow filter screen 23, which filters out debris, and the clean water is then discharged." *Id*.

373. Fu further makes clear that the drainage mechanism retains the debris that is filtered out from the pool water. "An anti-backflow device 25 is installed above the water inlet 26," which opens "[w]hen water flows in through the inlet," and closes "[w]hen the water flow stops," thus "prevent[ing] debris from flowing out of the water flow channel 24." *Id*. Thus, debris that is filtered out by the filter screen 23 is retained within the water flow channel 24. Fu also describes that "[w]hen the debris [inside the water flow channel 24] reaches a certain density, [the underwater cleaning robot] issues a 'debris full' alarm," further confirming that the drainage mechanism is configured to retain the debris collected from the submerged surface as claimed. *Id*.

374. Thus, Fu discloses "a filter [filter of Fu's drainage mechanism] configured to retain debris collected from the submerged surface."

e. Element 1d: "at least one camera for capturing an image of at least a first object within the swimming pool; and"

375. Fu discloses element 1d of claim 1. Fu's robot comprises "2 – monitoring camera," as shown in Figure 1 (EX1007, ¶[0014], Fig. 1):

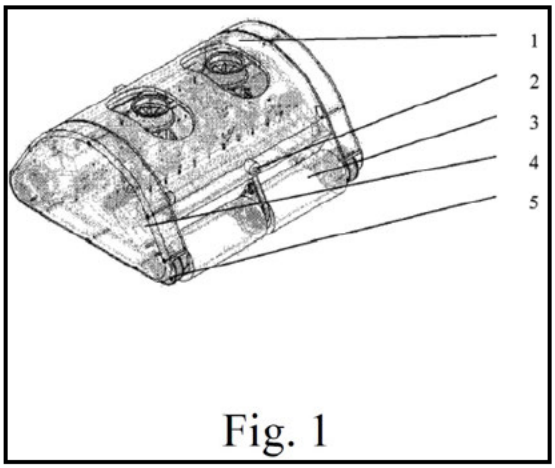

Fig. 1

376. "Said monitoring cameras 2 are installed on the two front panels of the robot main housing body." *Id.*, ¶[0024]. The robot "uses its monitoring cameras 2 to capture images of the pool floor and compares them with the [pool cleanliness image] threshold to determine the level of cleanliness." *Id.*, ¶¶[0010], [0026]. In doing so, the cameras 2 necessarily capture an image of at least a first object within the swimming pool, *e.g.*, the pool surface itself, as well as debris, dirt, or any other visible particles present on or near the pictured surface. Because Fu states that the captured image is evaluated to determine the cleanliness of the pool floor, the image

necessarily includes any debris or foreign matter that is present, along with the pool surface itself that is pictured.

377. The ’207 Patent includes no lexicography or disclaimer with respect to the term “object,” and so it is given its plain and ordinary meaning. The plain and ordinary meaning of “object” in the context of the ’207 Patent is any material thing that can be perceived by the senses. EX1020[14] (object - “something material that may be perceived by the senses”). Any debris, dirt, or the pool surface constitutes an “object” under the plain and ordinary meaning of that term.

378. Therefore, Fu discloses “at least one camera [monitoring cameras 2] for capturing an image of at least a first object within the swimming pool.”

f. Element 1e: “a controller (i) in electronic communication with the at least one camera and”

379. Fu discloses element 1e of claim 1. Fu discloses a control system that includes “a central processor, monitoring cameras, an image acquisition card, … motor drivers, a control system box 8, [and] cleaning driving wheel DC motors 7,” all of which are encapsulated within a “control system box 8.” EX1007, ¶[0024], Fig. 6.

[14] Exhibit 1020 is a true and correct copy of the webpage from Merriam-Webster’s Online Dictionary defining the word “object,” downloaded from https://www.merriam-webster.com/dictionary/object on November 20, 2025.

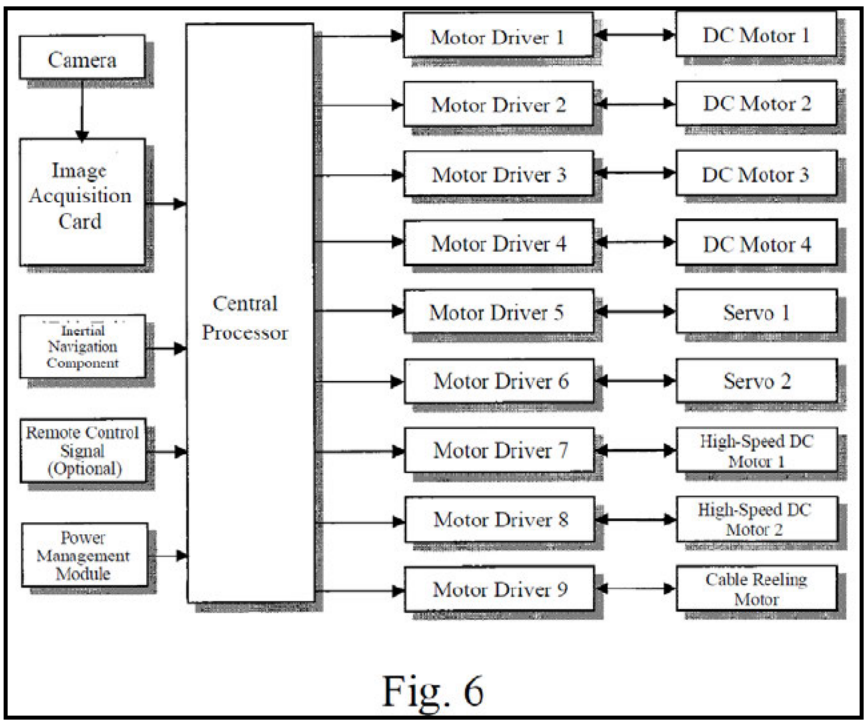

Fig. 6

Id., Fig. 6.

380. "The underwater cleaning robot controls its actions according to control commands issued by the central processor." *Id.*, ¶¶[0010], [0026]. Therefore, Fu's control system, that comprises the central processor for generating control signals for controlling the robot, teaches the claimed "controller." *Id.*

381. "[T]he monitoring cameras (2) are connected to the central processor via the image acquisition card." EX1007, Fig. 6, claim 1. The image acquisition card serves as an electronic interface that transmits an image from the monitoring cameras 2 to the central processor of the control system for processing, such that the controller (control system with the central processor) is "in electronic communication with the at least one camera [monitoring cameras 2]," as claimed.

g. Element 1f: "[the controller] (ii) configured to generate, in response to the captured image, at least one control signal to cause movement of the body within the swimming pool to, or away from, the first object."

382. Fu discloses element 1f of claim 1. Fu explains that "[t]he monitoring cameras 2 and the image acquisition card constitute the environmental perception layer of the control system." EX1007, ¶[0024]. "[I]nformation from the environmental perception layer," *i.e.*, the image captured by monitoring cameras 2 of at least a first object such as debris, is expressly identified as the basis upon which "control signals are generated by the central processor … to drive the robot[]" in the autonomous mode. *Id.*, ¶[0025].

383. Fu further describes its control architecture in which the image acquisition card comprises the control system's input, and the motor drivers that drive the cleaning driving wheels 3 comprise the output. *Id.*, ¶[0007]. As shown in Figure 6, the image acquisition card transmits the image captured by the cameras 2 to the central processor. *Id.*, Fig. 6, claim 1. Based on the captured image, "control signals are generated by the central processor, which autonomously plans paths and actions … to drive the robot's execution layer [*i.e.*, the motor drivers] and complete the underwater cleaning task." *Id.*, ¶[0025]. In other words, the central processor receives the captured image of at least a first object from the cameras 2, and

generates control signals based on the captured image to instruct the motor drivers on how to move the robot.

384. Fu further describes how its central processor uses the captured image to generate control signals for moving the robot:

> During the autonomous cleaning process, a pool cleanliness image threshold is set. The robot uses its monitoring cameras 2 to capture images of the pool floor and compares them with the threshold to determine the level of cleanliness. It then plans its cleaning movements and adjusts the working state of the four cleaning driving wheels 3 and the water discharger to complete the cleaning task. Specifically, the speed of each wheel 3 can be adjusted. By using different combinations of wheel speeds, cleaning actions of varying intensity can be achieved. For example, if the front wheels rotate quickly clockwise and the rear wheels rotate slowly counter-clockwise, the underwater cleaning robot will advance in the direction determined by the clockwise rotation of the front wheels.

EX1007, ¶[0026].

385. Fu also explains that "[b]y using different combinations of wheel speeds, the robot can perform tasks such as moving forward, backward, [and] turning," thus confirming that the generated signals cause the robot to move "to, or away from, the first object" based on the cleanliness determination of the pictured region of the pool. *Id.*

386. In sum, Fu's central processor uses the image captured by the monitoring cameras 2, which includes visible dirt or debris constituting "a first object," to assess the "level of cleanliness" of the pictured region of the pool. *Id.*

Based on that assessment, the central processor "plans its cleaning movements and adjusts the working state of the four cleaning driving wheels 3" to "perform tasks such as moving forward, backward, [and] turning." *Id.* A POSA would have recognized that any robot movement would necessarily be "to, or away from, the first object" captured by Fu's monitoring cameras 2.

387. Further, because the central processor generates control signals in response to the "level of cleanliness" of the captured image, and those control signal drive movement in "forward, backward, [or] turning" directions, a POSA would have understood that the controller directs the robot toward the first object when it is located in a sub-threshold (*i.e.*, relatively dirty) region and away from the first object when it is located in an above-threshold (*i.e.*, relatively clean) region.

388. Fu anticipates claim 1.

2. Claim 2

a. Preamble: "A pool system comprising:"

389. To the extent limiting, the preamble of claim 2 is disclosed by Fu. The preamble of claim 2 is broader than that of claim 1 because it merely recites a "pool system," imposing no requirements, as claim 1 does, that the pool system be "self-propelled" or that it be dedicated to "cleaning debris from a submerged surface of a swimming pool." Because Fu anticipates the narrower preamble of claim 1, Fu likewise anticipates the broader preamble of claim 2 that eliminates the requirements

of claim 1. Thus, Fu discloses the claimed "pool system [underwater cleaning robot]."

b. Element 2a: "at least one piece of equipment for a swimming pool or spa;"

390. Fu discloses element 2a of claim 2. Fu discloses "an underwater cleaning robot" designed "for the underwater cleaning of swimming pool floors and walls." EX1007, Abstract. An example of Fu's underwater cleaning robot is depicted in Figure 1:

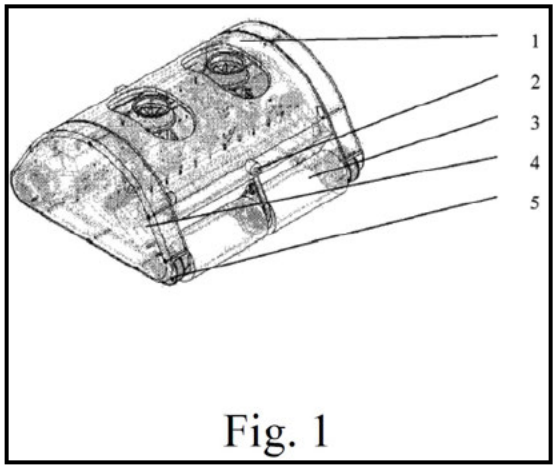

Id., Fig. 1.

391. Figure 7 illustrates the underwater cleaning robot performing "long-duration, global cleaning" of a swimming pool:

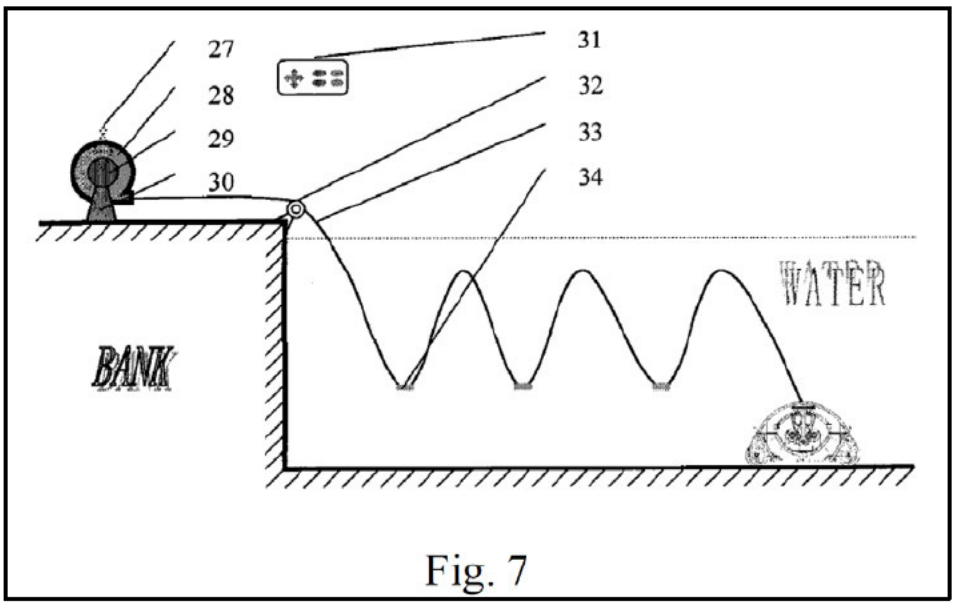

Fig. 7

Id., Fig. 7.

392. Accordingly, Fu's underwater cleaning robot, that is specifically designed for cleaning a swimming pool, discloses the claimed "at least one piece of equipment for a swimming pool or spa."

c. Element 2b: "one or more cameras configured to capture video or images of at least a portion of a location including the swimming pool or spa; and"

393. Fu discloses element 2b of claim 2. Fu's robot comprises "2 – monitoring camera," as shown in Figure 1 (EX1007, ¶[0014], Fig. 1):

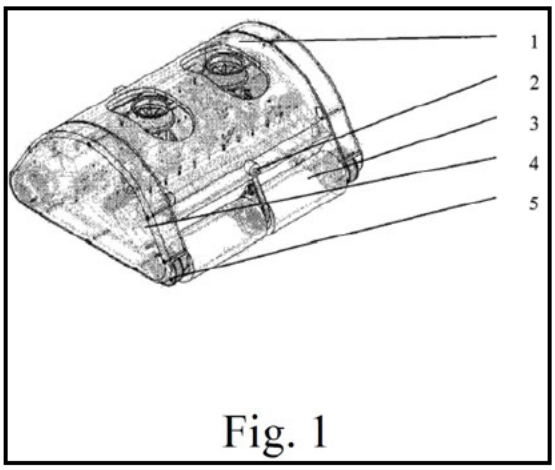

Fig. 1

394. "Said monitoring cameras 2 are installed on the two front panels of the robot main housing body." *Id.*, ¶[0024]. The robot "uses its monitoring cameras 2 to capture images of the pool floor," which is a part of the swimming pool. *Id.*, ¶[0026].

395. Therefore, Fu discloses "one or more cameras [monitoring cameras 2] configured to capture video or images of at least a portion of a location including the swimming pool or spa [images of the pool floor]."

d. Element 2c: "a controller in communication with the at least one piece of equipment and the one or more cameras, the controller configured to receive visual data from the one or more cameras and determine a control action for the at least one piece of equipment based on the received visual data."

396. Fu discloses element 2c of claim 2. As explained above with respect to element 1e, Fu's control system, comprising the central processor and motor drivers, teaches the claimed "controller." EX1007, ¶[0024], Fig. 6.

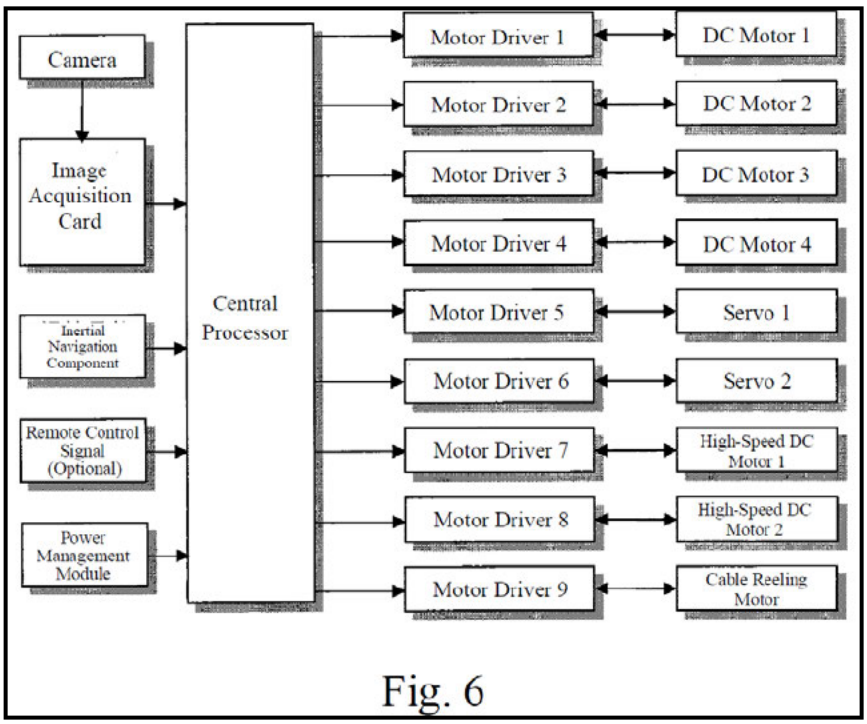

Fig. 6

Id., Fig. 6.

397. Fu further teaches that its control system is in communication with both the underwater cleaning robot as well as the monitoring cameras 2. Fu explains that the control system comprises "a central processor, monitoring cameras, an image acquisition card, … motor drivers, a control system box 8, [and] cleaning driving wheel DC motors 7." *Id.*, ¶[0024]. Figure 6 shows that "the monitoring cameras (2) are connected to the central processor via the image acquisition card." EX1007, Fig. 6, claim 1. The image acquisition card serves as an electronic interface that transmits visual data, such as captured images, from the monitoring cameras 2 to the central processor of the control system for processing, such that the controller is in communication with the one or more cameras as claimed. *Id.*

398. Fu also confirms that the controller is in communication with the underwater cleaning robot. Specifically, "[t]he underwater cleaning robot controls its actions according to control commands issued by the central processor," which establishes communication between Fu's control system and the underwater cleaning robot via control commands. *Id.*, ¶¶[0010], [0026].

399. Fu further explains how the control commands are based on the visual data captured by the cameras. Fu states that "[t]he monitoring cameras 2 and the image acquisition card constitute the environmental perception layer of the control system." EX1007, ¶[0024]. "[I]nformation from the environmental perception layer," *i.e.*, visual data captured by the monitoring cameras 2, is expressly identified as the basis upon which "control signals are generated by the central processor … to drive the robot[]" in the autonomous mode. *Id.*, ¶[0025].

400. Fu further describes its control architecture in which the image acquisition card comprises the control system's input, and the motor drivers that drive the cleaning driving wheels 3 comprise the output. *Id.*, ¶[0007]. As shown in Figure 6, the image acquisition card transmits the visual data captured by the cameras 2 to the central processor. *Id.*, Fig. 6, claim 1. Based on the visual data, "control signals are generated by the central processor, which autonomously plans paths and actions … to drive the robot's execution layer [*i.e.*, the motor drivers] and complete the underwater cleaning task." *Id.*, ¶[0025]. In other words, the central

processor receives the visual data from the cameras 2 and generates control signals based on the visual data to instruct the motor drivers on how to move the robot.

401. Fu describes in detail how its central processor uses the visual data to generate control signals for moving the robot:

> During the autonomous cleaning process, a pool cleanliness image threshold is set. The robot uses its monitoring cameras 2 to capture images of the pool floor and compares them with the threshold to determine the level of cleanliness. It then plans its cleaning movements and adjusts the working state of the four cleaning driving wheels 3 and the water discharger to complete the cleaning task. Specifically, the speed of each wheel 3 can be adjusted. By using different combinations of wheel speeds, cleaning actions of varying intensity can be achieved. For example, if the front wheels rotate quickly clockwise and the rear wheels rotate slowly counter-clockwise, the underwater cleaning robot will advance in the direction determined by the clockwise rotation of the front wheels.

EX1007, ¶[0026].

402. In sum, Fu describes a control system that receives visual data from the monitoring cameras 2, and uses that visual data to assess the "level of cleanliness" of the pictured region of the pool as compared against a "pool cleanliness image threshold." *Id.* Based on that assessment, "control signals are generated by the central processor, which autonomously plans" the robot's "cleaning movements and adjusts the working state of the four cleaning driving wheels 3" to "perform tasks such as moving forward, backward, [and] turning." *Id.* Accordingly, Fu discloses "a controller [control system with central processor] in communication with the at

least one piece of equipment [underwater cleaning robot] and the one or more cameras [monitoring cameras 2], the controller configured to receive visual data [images] from the one or more cameras and determine a control action [control signals regarding cleaning movements and wheel adjustments] for the at least one piece of equipment based on the received visual data."

403. Fu anticipates claim 2.

3. Dependent Claim 3: "The pool system of claim 2, wherein the at least one piece of equipment comprises a cleaning device with one or more propulsion mechanisms, the cleaning device configured to travel adjacent to submerged or water-containing surfaces of the swimming pool or spa and to perform a cleaning operation."

404. Fu discloses the limitations added in dependent claim 3. As explained above with respect to element 2a, Fu's underwater cleaning robot teaches the claimed "at least one piece of equipment." Fu describes the robot as specifically designed for cleaning a swimming pool by performing operations such as filtering the pool water and brush-cleaning the pool surfaces. EX1007, Abstract, ¶¶[0010], [0024]-[0026]. Thus, the robot constitutes "a cleaning device."

405. As explained above for element 1b, Fu discloses "means for moving the vehicle body within the swimming pool," and also discloses that the robot includes "one or more propulsion mechanisms," *e.g.*, driving wheels 3 powered by cleaning driving wheel DC motors 7.

406. Fu also teaches that its robot is configured to travel adjacent to submerged or water containing surfaces of the swimming pool to perform a cleaning operation. Fu states that its robot "possesses autonomous mobility and can be used for cleaning underwater horizontal, vertical, and inclined surfaces via remote or autonomous control, enabling it to autonomously complete underwater cleaning tasks in place of human labor." *Id*., ¶[0001], Abstract. Additionally, the robot "can adhere to the vertical walls of a swimming pool for cleaning, achieving vertical wall-climbing movement" because of "the high negative pressure within its water flow channel 24 and the force from the drainage mechanism." For vertical wall-climbing movement, Fu explains that the robot adjusts the position and discharge direction of the water outlets 10 to generate a propulsive force to ensure that the robot can continue its upward movement. *Id*., claim 9, ¶¶[0012], [0026] ("The coordinated movement or positioning of multiple water outlets 10 along the water outlet sliding grooves 9 changes the discharge direction of the water outlets 10, generating different forces that affect the robot's movement. … Particularly when the robot is climbing a wall, factors such as pool steps may cause the chassis to be lifted, rendering the four cleaning driving wheels 3 ineffective. In this situation, the position of the water outlets must be adjusted to provide a propulsive force to the robot, returning it to a normal operating state.").

407. Because Fu's robot travels underwater along the pool floor and/or vertical walls, it travels "adjacent to submerged or water containing surfaces of the swimming pool" just like the pool cleaning system 20 with vehicle 30 of the '207 Patent. Additionally, Fu's robot performs "a cleaning operation" such as filtering the pool water and brush-cleaning the pool surfaces through wheels 3, as explained above for the preamble of claim 1.

408. In sum, Fu anticipates "[t]he pool system of claim 2, wherein the at least one piece of equipment comprises a cleaning device [underwater cleaning robot] with one or more propulsion mechanisms [driving wheels 3 powered by cleaning driving wheel DC motors 7], the cleaning device configured to travel adjacent to submerged or water-containing surfaces of the swimming pool [pool floor and vertical pool walls] or spa and to perform a cleaning operation [filtering the pool water and brush-cleaning the pool surfaces]."

4. Dependent Claim 5: "The pool system of claim 2, wherein the one or more cameras are mounted on the at least one piece of equipment."

409. Fu discloses dependent claim 5. As explained with respect to element 2a above, Fu's underwater cleaning robot comprises the claimed "at least one piece of equipment." Additionally, as explained with respect to element 2b above, Fu's robot comprises "monitoring cameras 2" that "are installed on the two front panels of the robot main housing body." EX1007, ¶[0024]. Thus, Fu anticipates "[t]he

pool system of claim 2, wherein the one or more cameras [monitoring cameras 2] are mounted on the at least one piece of equipment [underwater cleaning robot]."

5. Dependent Claim 6: "The pool system of claim 2, wherein the one or more cameras are submergible or submerged within the swimming pool or spa."

410. Fu discloses dependent claim 6. As explained with respect to element 2b above, the claimed one or more cameras (monitoring cameras 2) are installed on the body of Fu's underwater cleaning robot. The robot is designed to operate entirely within an underwater pool environment, performing tasks such as filtering the pool water and brush-cleaning submerged surfaces:

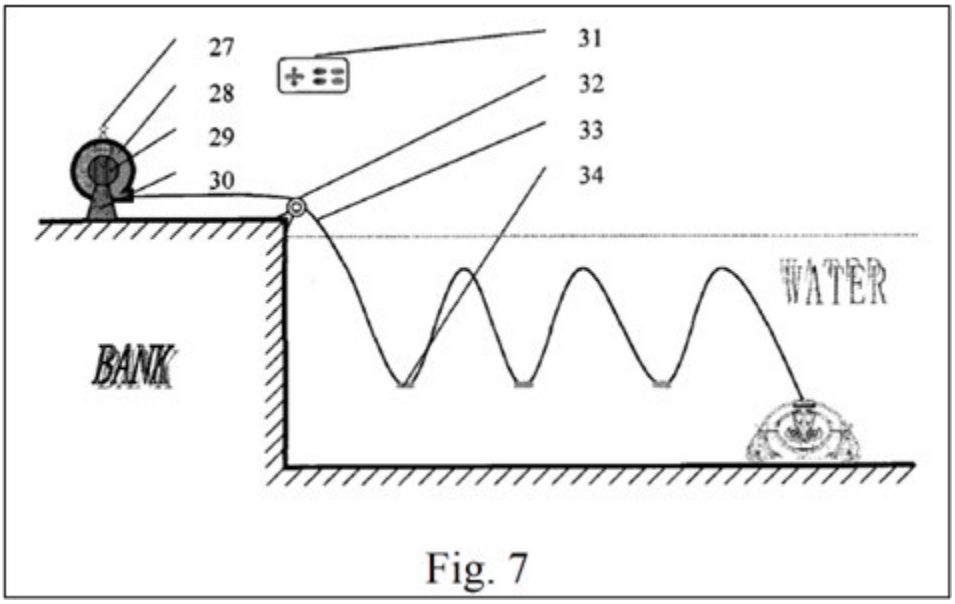

Id., Fig. 7 (showing the underwater cleaning robot submerged in a swimming pool performing "long-duration, global cleaning").

411. Because the cameras 2 are installed on the robot itself, which operates underwater, and their purpose is to capture images of the pool floor to assess

cleanliness and guide the robot's movement accordingly, the cameras 2 are submerged within the swimming pool. Thus, Fu anticipates "[t]he pool system of claim 2, wherein the one or more cameras [monitoring cameras 2] are submergible or submerged within the swimming pool or spa."

6. Dependent Claim 7: "The pool system of claim 2, wherein the controller is configured to detect a characteristic of the location based on the visual data and control the piece of equipment based on the detected characteristic."
Dependent Claim 8: "The pool system of claim 7, wherein the characteristic comprises a cleanliness of a surface of the swimming pool, and wherein the controller is configured to control the piece of equipment based on the detected cleanliness being outside of a threshold."

412. Fu discloses dependent claims 7 and 8. As explained with respect to element 2c, Fu's control system receives visual data, such as captured images of the pool floor, from the monitoring cameras 2. The control system compares that visual data against a "pool cleanliness image threshold" to determine the "level of cleanliness" of the pictured region of the pool, *i.e.*, whether the cleanliness level of the pictured region of the pool falls above or below the "pool cleanliness image threshold." This "level of cleanliness" constitutes "a characteristic of the location" as recited in claim 7, and "a cleanliness of a surface of the swimming pool" as recited in claim 8.

413. Based on this "level of cleanliness" determination, the control system plans and adjusts the cleaning movements of the robot, such as moving forward,

backward, turning, or adjusting wheel speeds. This adjustment of the robot's cleaning movements and wheel speeds based on the "level of cleanliness" determination constitutes "control [of] the piece of equipment based on the detected characteristic" as recited in claim 7, and "control [of] the piece of equipment based on the detected cleanliness being outside of a threshold" as recited in claim 8.

414. Thus, Fu anticipates claim 7: "[t]he pool system of claim 2, wherein the controller is configured to detect a characteristic of the location [level of cleanliness of the pictured region of the pool] based on the visual data and control the piece of equipment [adjust cleaning movements and wheel speeds of the underwater cleaning robot] based on the detected characteristic."

415. Accordingly, Fu also anticipates claim 8: "[t]he pool system of claim 7, wherein the characteristic comprises a cleanliness of a surface of the swimming pool [level of cleanliness of the pictured region of the pool], and wherein the controller is configured to control the piece of equipment [adjust cleaning movements and wheel speeds of the underwater cleaning robot] based on the detected cleanliness being outside of a threshold [pool cleanliness image threshold]."

7. Claim 12

a. Preamble: "A method for monitoring a pool system, the method comprising:"

416. To the extent limiting, the preamble of claim 12 is disclosed by Fu. Fu describes an underwater cleaning robot designed for cleaning a swimming pool.

EX1007, Abstract. In the autonomous mode, the robot uses monitoring cameras 2 to monitor pool conditions and operate accordingly. *Id*., ¶¶[0024]-[0025]. "During the autonomous cleaning process, a pool cleanliness image threshold is set. The robot uses its monitoring cameras 2 to capture images of the pool floor and compares them with the threshold to determine the level of cleanliness. It then plans its cleaning movements and adjusts the working state of the four cleaning driving wheels 3 and the water discharger to complete the cleaning task." *Id*., ¶¶[0026]. In other words, the robot continuously receives an image of the pool captured by the monitoring cameras 2. *Id*. The robot then evaluates that image to assess the "level of cleanliness" of the pool. *Id*. Based on this assessment, the robot accordingly cleans the pool by adjusting its cleaning movements and wheels. *Id*. This continuous image capture and analysis for determining the level of cleanliness of the pool comprises the claimed "method for monitoring a pool system." Based on this monitoring, the robot autonomously adjusts its cleaning operations. *Id*.

417. Thus, Fu discloses a "method for monitoring a pool system."

b. Element 12a: "receiving images of at least a portion of a location including a swimming pool or spa from one or more cameras;"

418. Fu discloses element 12a of claim 12. Fu's underwater cleaning robot "uses its monitoring cameras 2 to capture images of the pool floor." EX1007,

¶[0026]. A pool floor is at least "a portion of a location including a swimming pool" as claimed.

419. Additionally, the robot includes a control system that comprises "a central processor, monitoring cameras, an image acquisition card, … motor drivers, a control system box 8, [and] cleaning driving wheel DC motors 7." *Id.*, ¶[0024].

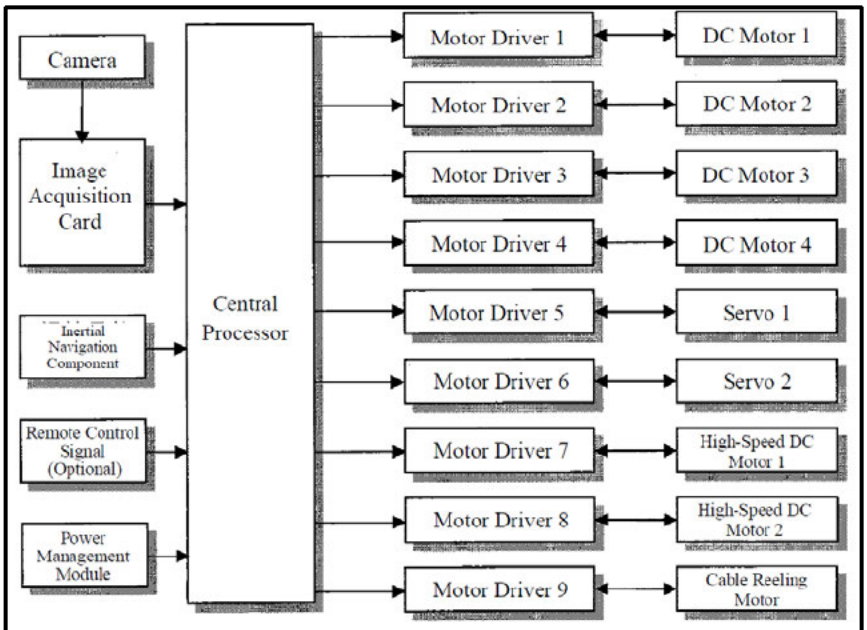

Fig. 6

Id., Fig. 6.

420. Figure 6 shows that "the monitoring cameras (2) are connected to the central processor via the image acquisition card." EX1007, Fig. 6, claim 1. The image acquisition card serves as an electronic interface that transmits the captured images from the monitoring cameras 2 to the central processor of the control system

for processing, such that the control system is "receiving images … from one or more cameras."

421. Thus, Fu discloses "receiving images of at least a portion of a location including a swimming pool [images of the pool floor] or spa from one or more cameras [monitoring cameras 2]."

c. Element 12b: "determining a target area and detecting a characteristic of the target area based on the images; and"

422. Fu discloses element 12b of claim 12. Fu's underwater cleaning robot "uses its monitoring cameras 2 to capture images of the pool floor and compares them with the [pool cleanliness image] threshold to determine the level of cleanliness." *Id.*, ¶[0026]. In Fu, the robot analyzes a specific region of the pool, the region pictured in the captured images, to determine whether that region meets the preset cleanliness threshold. The area of the pool floor that is captured in the images and subjected to this cleanliness analysis corresponds to the claimed "target area" because it is the specific area that is identified, *i.e.*, "determine[ed]" for evaluation.

423. Once the "target area" of the pool is captured in images, Fu teaches that the images are compared "with the [pool cleanliness image] threshold to determine the level of cleanliness." This "level of cleanliness" is a "characteristic of the target area" detected from the images captured by the monitoring cameras 2.

424. Thus, Fu discloses "determining a target area [the pictured region of the pool floor that is evaluated] and detecting a characteristic of the target area ["level of cleanliness"] based on the images."

d. Element 12c: "generating a control response based on the detected characteristic of the target area."

425. Fu discloses element 12c of claim 12. Fu explains that based on the "level of cleanliness" of the pictured region of the pool, "control signals are generated by the central processor, which autonomously plans" the robot's "cleaning movements and adjusts the working state of the four cleaning driving wheels 3" to "perform tasks such as moving forward, backward, [and] turning." *Id.* ("Specifically, the speed of each wheel 3 can be adjusted. By using different combinations of wheel speeds, cleaning actions of varying intensity can be achieved. For example, if the front wheels rotate quickly clockwise and the rear wheels rotate slowly counter-clockwise, the underwater cleaning robot will advance in the direction determined by the clockwise rotation of the front wheels.").

426. The adjustments to the robot's cleaning movements and the working state of the wheels are generated by the control system in response to the detected level of cleanliness, and comprise a "control response" that controls operation of the robot.

427. Thus, Fu discloses "generating a control response [the control signals and resulting adjustments to the robot's cleaning movements and working

state of the wheels] based on the detected characteristic ["level of cleanliness"] of the target area [the pictured region of the pool floor that is evaluated]."

428. Fu anticipates claim 12.

8. Dependent Claim 13: "The method of claim 12, wherein the target area comprises a portion of a surface of the swimming pool or spa, and wherein the characteristic comprises a cleanliness characteristic of the portion of the surface of the swimming pool or spa."

429. Fu discloses dependent claim 13. As explained with respect to claim 12, Fu's monitoring cameras 2 capture images of the pool floor, which is "a portion of a surface of the swimming pool" as claimed. The robot analyzes the region of the pool captured in the images to determine a "level of cleanliness." The region pictured in the pool, which is evaluated for cleanliness, constitutes the "target area," and the "level of cleanliness" determination constitutes the "cleanliness characteristic."

430. Thus, Fu discloses "[t]he method of claim 12, wherein the target area [the pictured region of the pool floor that is evaluated] comprises a portion of a surface of the swimming pool or spa, and wherein the characteristic comprises a cleanliness characteristic ["level of cleanliness"] of the portion of the surface of the swimming pool or spa."

431. Fu anticipates claim 13.

9. Dependent Claim 14: "The method of claim 12, wherein generating the control response comprises controlling an

operation of a piece of equipment of the swimming pool or spa."

432. Fu discloses dependent claim 14. As explained with respect to claim 12, based on the "level of cleanliness" of the pictured region of the pool, Fu's central processor generates control signals that autonomously adjust the robot's cleaning movements and working state of the wheels. EX1007, ¶[0026]. The robot and its components operate within the swimming pool, and thus comprise "a piece of equipment of the swimming pool." Thus, Fu discloses "[t]he method of claim 12, wherein generating the control response comprises controlling an operation of a piece of equipment of the swimming pool [the underwater cleaning robot] or spa."

433. Fu anticipates claim 13.

10. Dependent Claim 19: "The method of claim 12, wherein generating the control response comprises controlling operation of a cleaning device configured to travel adjacent to submerged or water-containing surfaces of the swimming pool or spa and to perform a cleaning operation, wherein controlling operation of the cleaning device comprises one or more of controlling a path or route of the cleaning device, an aggressiveness of cleaning chemicals deployed, an aggressiveness of mechanical cleaning, or a speed of the cleaning device."

434. Fu discloses dependent claim 19. As explained with respect to claim 12, Fu's underwater cleaning robot is designed for cleaning a swimming pool, so it comprises a "cleaning device." Additionally, as explained with respect to claim 3, the robot is "configured to travel adjacent to submerged or water-containing surfaces

of the swimming pool or spa to perform a cleaning operation" because it "possesses autonomous mobility and can be used for cleaning underwater horizontal, vertical, and inclined surfaces via remote or autonomous control, enabling it to autonomously complete underwater cleaning tasks in place of human labor." *Id.*, ¶[0001], Abstract.

435. Fu further teaches that its central processor generates control signals that autonomously adjust the robot's cleaning movements and working state of the wheels based on the "level of cleanliness." These adjustments include "controlling a path or route of the cleaning device," as well as "controlling … a speed of the cleaning device." EX1007, ¶[0026] ("By using ***different combinations of wheel speeds***, cleaning actions of varying intensity can be achieved. For example, if the front wheels rotate quickly clockwise and the rear wheels rotate slowly counter-clockwise, the underwater cleaning robot will advance in ***the direction determined by the clockwise rotation*** of the front wheels." (emphasis added)).

436. Thus, Fu discloses "[t]he method of claim 12, wherein generating the control response comprises controlling operation of a cleaning device [underwater cleaning robot] configured to travel adjacent to submerged or water-containing surfaces of the swimming pool [pool floor and vertical pool walls] or spa and to perform a cleaning operation, wherein controlling operation of the cleaning device comprises one or more of controlling a path or route of the cleaning device [controlling the direction of the robot], an aggressiveness of cleaning chemicals

deployed, an aggressiveness of mechanical cleaning, or a speed of the cleaning device [controlling the speed of cleaning wheels 3]."

B. Ground 1b: Claims 1-3, 5-8, 12-14, And 19 Would Have Been Obvious Over Fu

1. Claim 1

437. Fu anticipates claim 1 of the '207 Patent. *See* Ground 1a above. However, should the Board find that Fu does not anticipate claim 1 because it allegedly lacks at least one control signal that causes movement of the body "to, or away from, the first object,"[15] Fu nevertheless would have rendered obvious this claim.

438. Fu already teaches acquiring images of submerged pool surfaces (EX1007, ¶[0026]), comparing these images to a cleanliness image threshold (*id.*), and "plan[ning] … cleaning movements" and "adjust[ing] the working state of the four cleaning drive wheels 3 … to complete the cleaning task" based on this

[15] As explained in Section XIII.A.1.g, such a finding would be erroneous because claim 1 encompasses any control signal generated in response to the captured image that causes movement of the body: Once the camera captures an image of at least a first object within the swimming pool, the vehicle occupies some finite position relative to that first object. *Any* movement commanded by the control signal—whether forward, backward, laterally, vertically, or along any trajectory—will necessarily decrease or increase the distance between the vehicle body and that imaged first object, *i.e.*, it will be movement "to, or away from" that first object. Because Fu discloses the generation of a control signal in response to the captured image of at least a first object that causes movement of the vehicle body, it necessarily discloses element 1f.

comparison (*id.*). A POSA would have found it obvious to implement motion control in Fu to direct the cleaning robot toward (i) pictured regions containing a first object falling below the cleanliness threshold, and (ii) away from pictured regions containing the first object falling above the cleanliness threshold.

439. Given Fu's use of image-based cleanliness determination to adjust wheel speeds and movement paths, it would have been a routine and predictable application for a POSA to configure Fu's central processor to generate control signals directing the robot toward the first object when it is in subthreshold (*i.e.*, relatively dirty area). A POSA would have been motivated to do so because moving the robot toward dirtier areas improves cleaning efficiency and task completion time. Likewise, it would have been a routine and predictable application to configure Fu's central processor to generate control signals directing the robot away from the first object when it is present in above-threshold (*i.e.*, relatively clean) photographed regions. Implementing such control behaviors in Fu would have required no more than routine software configuration within a POSA's skill. Such implementation would reflect only routine, predictable applications of well-known control techniques, requiring no new hardware and instead leveraging Fu's disclosed central processor. A POSA would have thus had a reasonable expectation of success in implementing Fu with the claimed "at least one control signal to cause movement of the body within the swimming pool to, or away from, the object."

440. Accordingly, even if Fu were found not to anticipate, it would have rendered obvious claim 1 for at least these reasons.

2. Claims 2, 3, 5-8, 12-14, And 19

441. Independent claims 2 and 12 recite limitations similar to those of claim 1 and are obvious over Fu for the reasons explained in the preceding section for claim 1. Fu also discloses the limitations added in dependent claims 3, 5-8, 13, 14, and 19 (*see* Section XIII.A.1.b above for Ground 1a), such that these dependent claims are likewise obvious over Fu.

C. Ground 1c: Claims 1-8, 11-14, And 19 Would Have Been Obvious Over Fu In View of Benzler

1. Motivations To Combine

442. The similar disclosures of Fu and Benzler would have motivated a POSA to consider these references together. As detailed in Section X.A above, Fu discloses capturing an image, comparing it to a cleanliness threshold to determine a level of cleanliness, and then planning movement and adjusting the working state of a robot's drive wheels to complete a cleaning task. EX1007, ¶[0026]. Benzler, like Fu, describes an autonomous robotic cleaning system that makes movement and cleaning decisions based on an image of the cleaning surface or work area, including "differently conditioned" sections of the work area. EX1013, Abstract, ¶¶[0016], [0018], [0028], [0037], [0044]-[0046], [0053]. In particular, Benzler describes an activation system for a robotic vehicle 2 that includes (i) a digital camera 8 for

capturing an image of the work area, and (ii) a logic unit 10 that evaluates the image to generate driving instructions for the robotic vehicle 2. *Id.*, Abstract.

443. In a "particularly preferred" embodiment, Benzler's robotic vehicle is a "pool-robotic vehicle … in particular as a filter vehicle and/or cleaning or purifying vehicle," which drives on the bottom of a pool to perform its cleaning function. *Id.*, ¶[0028]. Benzler further explains that "the internal or external logic unit automatically calculates a trajectory for the robotic vehicle based on the image data that is in particular continuously determined by the external camera." *Id.*, ¶[0024]. These disclosures confirm that Benzler, like Fu, is directed to an autonomous robotic cleaner that uses image-derived information to guide its movement and cleaning, and in particular, includes an embodiment where the cleaning is performed in a pool environment using camera-based navigation.

2. Claim 1

444. To the extent that the Board determines that Fu alone does not anticipate or render obvious the claimed "at least one control signal to cause movement of the body within the swimming pool to, or away from, the first object," claim 1 is nonetheless obvious over Fu in combination with Benzler.

445. A POSA would have been motivated to combine Fu and Benzler to yield the claimed control signal for causing movement "to, or away from" a portion of the submerged surface (i) captured by the camera, and (ii) containing the first

object. Benzler describes embodiments in which its robotic vehicle is implemented as an autonomous lawnmower, a snow cleaning vehicle, a gas collecting vehicle, a thatching vehicle, a weeding vehicle, etc. *Id.*, ¶[0023]. In the autonomous lawnmower embodiment, for instance, "the logic unit … is … construed in such a way that differently conditioned sections (mowed/not mowed) … are detected and the driving instructions are calculated in such a way that preferably the mowed section … is driven along." *Id.*, ¶¶[0018], [0045]. Benzler also discloses that in embodiments, "the logic unit detects differently conditioned sections of the work area, for example a mowed or a not mowed section of the work area based on the image data and then considers this information when calculating the driving instructions, in particular in such a way that the robotic vehicle does only or preferably move on one of those sections, in particular the not mowed lawn section." *Id.*, ¶[0016]. Thus, Benzler uses image-based classification of differently conditioned sections to cause motion "only or preferably" toward target sections and away from non-target sections. *Id.*, ¶¶[0016], [0018], [0045].

446. A POSA would have been motivated to incorporate Benzler's classification-driven motion control into Fu because it is a known technique for improving coverage efficiency and cleaning performance, satisfies design needs to prioritize dirty areas and reduce redundant cleaning, and represents one of a finite, predictable set of control options once regions are classified with respect to a

threshold. EX1010, ¶¶444-448. Applying Benzler's classification-driven motion to Fu's thresholded cleanliness determinations would have yielded the claimed control signal for causing movement "to, or away from" a portion of the submerged surface captured by the camera, with the robot moving toward sub-threshold (dirtier) regions and away from above-threshold (cleaner) regions. A POSA would also have had a reasonable expectation of success. The combination does not require new hardware or unconventional algorithms; Fu already discloses the cameras, processor, and wheels, and it "plans" movement and "adjusts" wheel states based on cleanliness determinations. Implementing Benzler's classification-based movement entails routine controller configuration that would have been within a POSA's skill.

447. In sum, even if Fu alone were deemed insufficient, the combination of Fu with Benzler renders obvious the "to, or away from" control-signal limitation of claim 1 by teaching and motivating the use of image-based region classification to control motion toward target (dirtier) regions and away from non-target (cleaner) regions, with a reasonable expectation of success.

448. Claim 1 would have been obvious over Fu in view of Benzler.

3. Dependent Claim 4: "The pool system of claim 2, wherein the one or more cameras are mounted external to the swimming pool or spa."

449. Claim 4 would have been obvious over Fu in view of Benzler. As explained with respect to claim 2, Fu discloses a pool system comprising an

underwater cleaning robot with onboard cameras that are submerged in the pool. Benzler demonstrates that the use of off-board, external cameras for pool-cleaning was also well-known in the art, and a POSA would have been motivated to implemented Fu's pool-cleaning system with external cameras like those taught in Benzler.

450. Specifically, a POSA would have recognized the advantages of implementing Fu with Benzler's external camera 8. Benzler emphasizes that the external camera 8 is positioned above the pool so that it can capture a broad, global view of the entire pool. *Id*., ¶[0010] ("The camera is preferably arranged above the work area, so that a section of the work area can be detected that is as big as possible with the camera .... It is furthermore possible to arrange the at least one camera … in such a way that it follows the movement of the robotic vehicle."). A POSA would understand that this overhead perspective provides additional information that Fu's submerged, onboard cameras cannot capture; while Fu's onboard cameras observe only a partial, local region within the pool, Benzler's external camera provides a complete, unobstructed view of the entire pool along with the robot's exact location, orientation, and trajectory. A POSA would therefore understand that the external camera thus facilitates a more accurate monitoring and control of the robot.

451. A POSA would also have had a reasonable expectation of success in making this combination because Fu already provides an existing communication

infrastructure that is external to the pool. For instance, Figure 7 illustrates a "control and power management system" that is external to the pool, and includes components such as the signal relay and cable manager 28 and the signal and power cable 33:

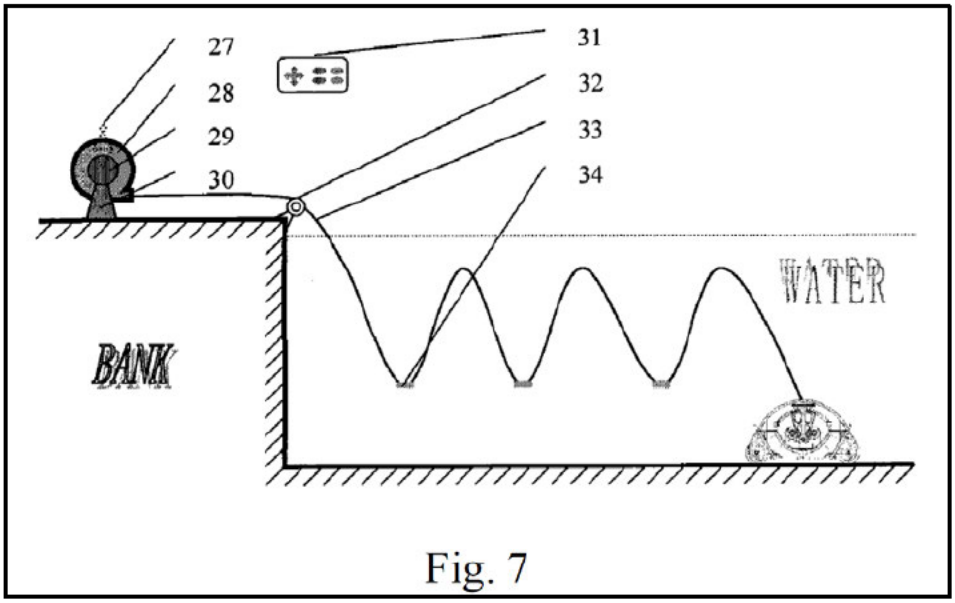

Fig. 7

Id., Fig. 7.

452. This system already establishes a communication path that is utilized to transmit controls signals and power between the external hardware and the underwater robot. A POSA would readily understand that this same communication path could be used to transmit data from Benzler's camera 8, and/or control signals derived from images captured by the camera 8, to the underwater robot. Fu's architecture thus provides an existing communication infrastructure that could easily be used to integrate Benzler's external camera 8. This would be a straightforward integration that is well within a POSA's skill.

453. Thus, Fu in view of Benzler renders obvious "[t]he pool system of claim 2, wherein the one or more cameras [Benzler's camera 8] are mounted external to the swimming pool or spa." Claim 4 would have been obvious over Fu in view of Benzler.

4. Dependent Claim 11: "The pool system of claim 2, wherein the controller is remote from the camera."

454. Claim 11 would have been obvious over Fu in view of Benzler. As explained above for claim 4, a POSA would have recognized the advantages of implementing Fu with Benzler's external camera 8. Fu discloses an onboard controller (control system with the central processor) in communication with the camera to process the camera's images and guide the robot. A POSA would have been motivated to implement Benzler's external camera 8 with Fu's onboard controller, making "the controller [] remote from the camera" in Fu's underwater robot.

455. Thus, Fu in view of Benzler renders claim 11.

5. Claims 2, 3, 5-8, 12-14, And 19

456. Independent claims 2 and 12 recite limitations similar to those of claim 1 and are obvious over Fu in view of Benzler for the reasons explained in Sections XIII.C.1-2 for claim 1. Fu also discloses the limitations added in dependent claims 3, 5-8, 13, 14, and 19 (*see* Section XIII.A above for Ground 1a), such that these dependent claims are likewise obvious over Fu in view of Benzler.

D. Ground 2a: Claims 1-7, 11-14, And 19 Would Have Been Obvious Over Schnittman In View Of Benzler

1. Motivations To Combine

457. Schnittman discloses an autonomous cleaning robot 11 with movement and cleaning decisions tied to an image received from a debris sensor, including embodiments where the debris sensor is a camera 1190. Section X.B. The image may include "detection of debris and/or an obstacle by the camera 1190." *Id.*, ¶[0204]. Schnittman explains that the camera 1190 is in communication with a microprocessor 245, such that movement of the robot 11 over the cleaning surface is based on this image, for *e.g.*, "to avoid obstacles and/or debris large than a specific size," or "to recognize debris on the cleaning surface and maneuver the robot 11 toward the debris." *Id.*

458. Importantly, Schnittman is not limited to any specific environment; its teachings apply generally to cleaning robots that navigate and make cleaning decisions based on an image of the surface being cleaned. This image-based control represented a state-of-the-art approach to autonomous cleaning at the time of the '207 Patent, and a POSA designing a pool-cleaning robot would have recognized that Schnittman's teachings and stated advantages (*e.g.*, robust, debris-responsive cleaning coverage) could be advantageously leveraged in a pool-cleaning context.

459. The POSA designing a pool-cleaning robot at the time of the alleged invention would have also looked to pool-cleaning literature, like Benzler. Benzler,

like Schnittman, describes an autonomous robotic cleaning system that makes movement and cleaning decisions based on an image of the cleaning surface or work area. Section X.C. In particular, Benzler describes an activation system for a robotic vehicle 2 that includes a digital camera 8 for capturing an image of the work area and a logic unit 10 that evaluates the image to generate driving instructions for the robotic vehicle 2. *Id*., Abstract.

460. In a "particularly preferred" embodiment, the robotic vehicle is a "pool-robotic vehicle … in particular as a filter vehicle and/or cleaning or purifying vehicle," which drives on the bottom of a pool to perform its cleaning function. *Id.*, ¶[0028]. Benzler further explains that "the internal or external logic unit automatically calculates a trajectory for the robotic vehicle based on the image data that is in particular continuously determined by the external camera." *Id.*, ¶[0024]. These disclosures confirm that Benzler, like Schnittman, is directed to an autonomous robotic cleaner that uses image-derived information to guide its movement and cleaning, and in particular, includes an embodiment where the cleaning is performed in a pool environment using camera-based navigation.

461. A POSA would have been motivated to consider Schnittman and Benzler together because they describe similar technology (*e.g.*, autonomous cleaning robots that employ computer vision) and address the same problem: enabling a robot to make cleaning and navigation decisions based on an image of the

cleaning surface. At the time of the ’207 Patent, POSAs working in the field of autonomous, image-based cleaning robots, whether for floors, lawns, or pools, were addressing the same core problem: how to use an image to enable a robot to perceive its cleaning surface, and execute cleaning operations autonomously. Both Schnittman and Benzler address that problem, and offer complementary, overlapping teachings that a POSA would have recognized as related.

462. At the time of the alleged invention (July 2012), a POSA would have understood that the robotics principles underlying such image-based cleaners, like those developed by leading cleaning robot manufacturers such as iRobot (assignee of Schnittman), were readily adaptable to different environments and mediums. Robotics, like any other technology, develops by building on existing technology and adapting existing technology to new contexts. POSAs working in the field of autonomous pool cleaners were not working in isolation; they routinely drew on technologies from the broader field of autonomous cleaning robots. Indeed, Benzler itself confirms this: it describes the same image-driven framework as Schnittman, with Benzler applying this framework to both land and water environments.

463. Benzler would have also reinforced a POSA’s understanding that Schnittman’s cleaning robot could be advantageously adapted for use in a pool-cleaning context. For example, Benzler’s teaching of a “moisture-sealed housing” for the internal logic unit (*id.*, ¶[0011]) explicitly contemplates operation in wet

environments, providing a practical implementation detail that a POSA would have readily incorporated when adapting Schnittman's camera-based cleaning robot for underwater use. Likewise, for instance, Benzler's teaching of "pool robotic vehicles [that] drive in particular on the bottom of a pool" using wheels powered by a drive motor (*id.*, ¶¶[0028], [0051], Fig. 3) reinforces that Schnittman's similar motor-powered wheels 45 could be readily adapted for underwater use. Schnittman's image-based debris detection and navigation system, combined with Benzler's known underwater implementation of a similar image-based robotic pool cleaner, would predictably yield an image-based underwater pool cleaner that is driven based on an image of the pool surface.

464. Additionally, Benzler describes other embodiments in which the robotic vehicle is implemented as an autonomous lawnmower, a snow cleaning vehicle, a gas collecting vehicle, a thatching vehicle, a weeding vehicle, etc. *Id.*, ¶[0023]. In the autonomous lawnmower embodiment, for instance, "the logic unit … is … construed in such a way that differently conditioned sections (mowed/not mowed) … are detected and the driving instructions are calculated in such a way that preferably the mowed section … is driven along." *Id.*, ¶¶[0018], [0045]. Like the pool cleaning vehicle embodiment, this embodiment is based on the same image-driven activation system: the camera captures an image of the work area, and the logic unit interprets the captured image to determine how that area is

"conditioned" and where to move next. *Id.*, ¶¶[0016], [0018], [0045]. By describing the same image-based system across multiple domains, land and water alike, Benzler demonstrates that a POSA understood how to adapt the principles of image-based robotic navigation and cleaning across various environments and mediums.

465. Furthermore, a POSA would have had a reasonable expectation of success in making this combination. By the time of the '207 Patent, the necessary adaptations to render a system water-ready were straightforward and within a POSA's skill, with such adaptations including moisture-sealing or potting electronics, waterproofing housings, ensuring stable mobility and traction along submerged pool surfaces to counter buoyancy and slippage, and applying known image-processing techniques to extract useful information from underwater camera imagery.

466. For example, in the same period, the use of cameras on underwater vehicles was known (*see, e.g.*, EX1014, EX1015, EX1016), and researchers documented techniques to improve the effectiveness of underwater imaging. Literature from around the time of the '207 Patent described various normalization, filtering, and color-space methods that robustly extract target information from underwater environments in real time. *See* EX1017, 7. These developments would have reinforced a skilled artisan's motivation and reasonable expectation of success in adapting Schnittman to Benzler's pool-cleaning context. Thus, a POSA seeking

to develop an autonomous pool-cleaning robot would have been motivated to extend the teachings of Schnittman to the underwater context, with Benzler providing clear guidance and confirmation that such an adaption was both known and would be successful.

2. Claim 1

a. Preamble: "A self-propelled pool cleaning system for cleaning debris from a submerged surface of a swimming pool, comprising:"

467. To the extent limiting, Schnittman in view of Benzler would have rendered obvious the preamble of claim 1. Schnittman discloses a debris monitoring system using autonomous robotic cleaners for removing debris from cleaning surfaces (*e.g.*, floors). EX1008, ¶¶[0002], [0023], [0033]. For example, Figure 14D depicts an exemplary autonomous robotic cleaner 11 and its maintenance station 1250 (*id.*, ¶¶[0097], [0216]-[0217]):

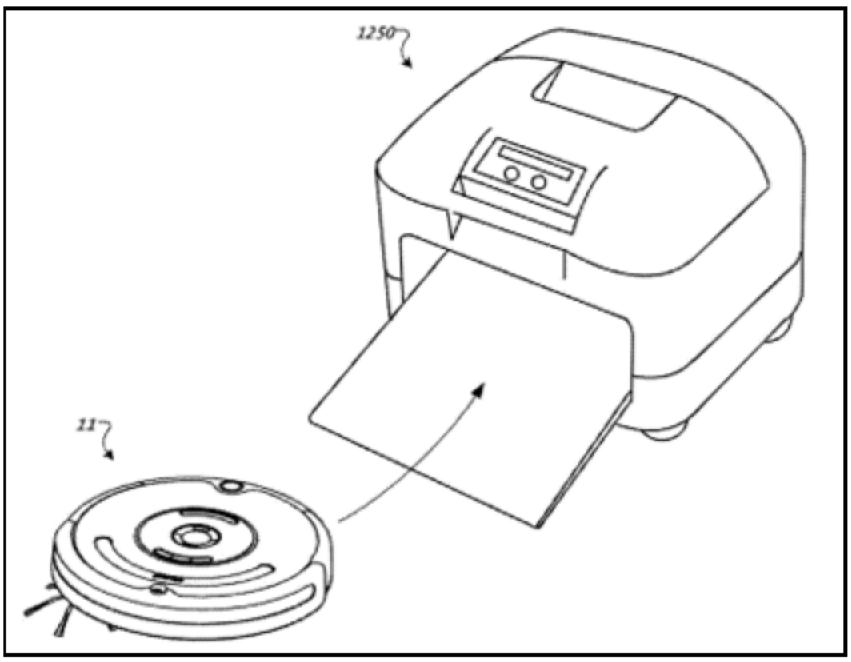

Id., Fig. 14D.

468. In embodiments, Schnittman's autonomous robotic cleaners include "debris agitators," such as brushes, that "sweep or otherwise agitate debris from the cleaning surface." *Id.*, ¶¶[0026], [0027], [0031], [0115], [0119], [0128], [0130]-[0131].

469. Further, Schnittman's autonomous robotic cleaners are "self-propelled" because they include an onboard drive system and wheels that move and steer the robot without external propulsion. *See, e.g., id.*, ¶¶[0005] ("The drive system is coupled to the housing and configured to maneuver the robot across a cleaning surface."), [0112] ("installed along either side of the robot body 31 are differentially driven wheels 45, each rotatable about a transverse axis, to mobilize the robot 11"), [0119] ("right and left wheel motors" for the respective "right and left differentially

driven wheels 45"). In embodiments, power for moving Schnittman's autonomous robotic cleaners is provided via an onboard battery that is charged at a maintenance station (*e.g.*, the maintenance station 1250 shown above). *Id.*, ¶¶[0048], [0050], [0054], [0115], [0118], [0216]-[0217], [0221], [0227], [0230].

470. As detailed below for elements 1a-1f, Schnittman's cleaning robot discloses the features recited in claim 1 ("vehicle body," "means for moving the vehicle body," "filter," "at least one camera," and "controller"), and thus discloses the "pool cleaning system" recited in the preamble.

471. Thus, Schnittman's autonomous robotic cleaners disclose a "self-propelled . . . cleaning system for cleaning debris from a . . . surface," and as explained above, a POSA would have been motivated to apply Schnittman's teachings in the pool-cleaning context for cleaning submerged surfaces in view of Benzler. Section XIII.D.1. Therefore, Schnittman in view of Benzler renders obvious the "self-propelled pool cleaning system for cleaning debris from a submerged surface of a swimming pool" recited in the preamble of claim 1.

b. Element 1a: "a vehicle body;"

472. Schnittman discloses element 1a of claim 1. Schnittman states that embodiments of its autonomous robotic cleaners include "a robot body 31 (*e.g.*, a chassis and/or housing) which carries an outer shell 6 connected to a bumper 5" (EX1008, ¶[0111]):

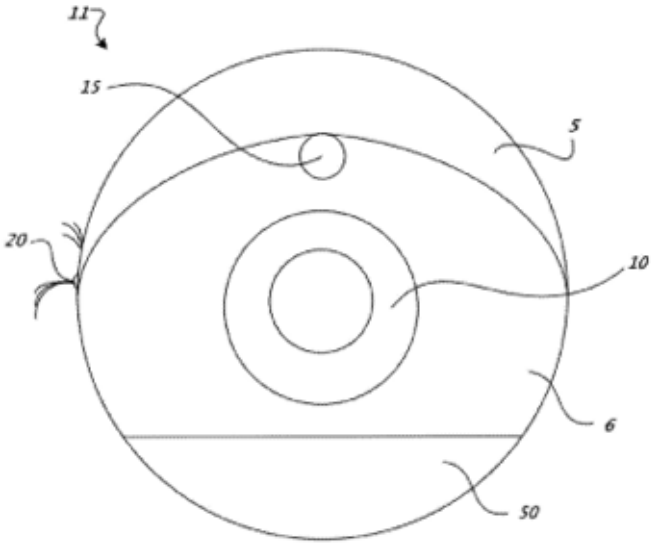

FIG. 1A

Id., Fig. 1A.

473. In embodiments, the robot body 31 "carries a control panel 10 and an omnidirectional receiver 15, which has a 360 degree line of vision for detection of signals emitted towards the robot 11 from substantially all directions." *Id.*, ¶[0111].

474. Schnittman's robot body 31 discloses the claimed "vehicle body."

c. Element 1b: "means for moving the vehicle body within the swimming pool;"

475. Schnittman in view of Benzler would have rendered obvious element 1b of claim 1. As explained in Section VIII above, "means for moving the vehicle body within the swimming pool" is an MPF term, and the corresponding structures disclosed in the '207 Patent include "wheels, rollers, tracks or other surface contacting members powered by a motor and the like." EX1005, 3:31-43.

476. Schnittman discloses "moving the vehicle body" and a corresponding structure described in the '207 Patent. As explained above for the preamble of claim 1, Schnittman's autonomous robotic cleaners include an onboard drive system (also referred to as a "drive assembly") for moving the robot, including its body. EX1008, ¶¶[0005], [0040], [0044], [0119], [0177]. The drive system "includes right and left differentially driven wheels 45, right and left wheel motors, and wheel encoders" in embodiments (*id.*, ¶[0119]):

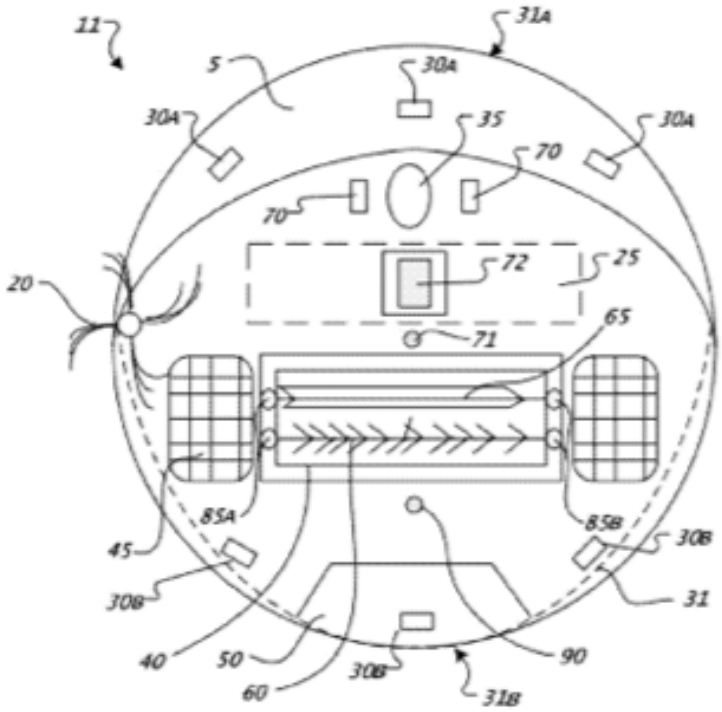

FIG. 1B

Id., Fig. 1B.

477. Schnittman's "drive system is coupled to the [robot's] housing and configured to maneuver the robot across a cleaning surface." *Id.*, ¶[0005]. Further, the drive system is "operable to receive commands from the microprocessor 245"

for controlling the movement of the robot. *Id.*, ¶[0119], [0177]. Schnittman thus discloses the claimed function ("moving the vehicle body"), and Schnittman's wheels 45 powered by right and left wheel motors disclose a corresponding structure described in the '207 Patent for performing this function.

478. While Schnittman does not disclose moving its autonomous cleaning robots "within [a] swimming pool" specifically, as explained above, a POSA would have been motivated to apply Schnittman's teachings in the pool-cleaning context in view of Benzler. Section XIII.D.1. For instance, Benzler's teaching of "pool robotic vehicles [that] drive in particular on the bottom of a pool" using wheels powered by a drive motor (*id.*, ¶¶[0028], [0051], Fig. 3) provides a drive system similar to that of Schnittman, reinforcing that Schnittman's similar motor-powered wheels 45 could be readily adapted for underwater use. Therefore, Schnittman in view of Benzler renders obvious the "means for moving the vehicle body within the swimming pool [drive system]."

d. Element 1c: "a filter configured to retain debris collected from the submerged surface;"

479. Schnittman in view of Benzler would have rendered obvious element 1c of claim 1. Schnittman discloses that embodiments of its autonomous robotic cleaners include an "internal filter 54" (EX1008, ¶[0117]):

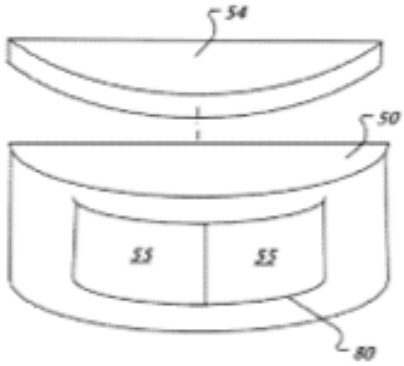

FIG. 1C

Id., Fig. 1C; *see also id.*, ¶¶[0120]-[0124], [0129].

480. Schnittman's internal filter 54 is configured to retain debris collected from a cleaning surface, such as a "submerged surface" in a pool-cleaner implementation of Schnittman's robotic cleaner in view of Benzler. In embodiments, the internal filter 54 is part of the robot's cleaning bin 50, with the internal filter 54 retaining collected debris. EX1008, ¶¶[0117], [0121], [0123]-[0124] (internal filter must be cleaned to remove collected debris), [0129], [0242], [0248]. A pool-cleaner implementation of Schnittman would include a filter like that described in Schnittman, with the filter retaining debris collected by the robot while passing filtered, clean water back into the swimming pool. Benzler describes the use of debris-retaining filters in pool-cleaning robots. EX1013, ¶[0028] ("the robotic vehicle is construed as [a] pool-robotic vehicle, thus in particular as [a] filter vehicle and/or cleaning or purifying vehicle"), Claim 22 ("a working element of the [pool-cleaning] robotic vehicle, in particular the width of a filter unit"). Such on-

board filters for pool-cleaning robots were well-known at the time of the alleged invention, and a POSA would have understood how to modify or replace Schnittman's filter for use in a pool-cleaning context. A POSA's motivation for making such modifications is explained above in Section XIII.D.1. Therefore, Schnittman in view of Benzler renders obvious "a filter [internal filter 54] configured to retain debris collected from the submerged surface."

e. Element 1d: "at least one camera for capturing an image of at least a first object within the swimming pool; and"

481. Schnittman in view of Benzler would have rendered obvious element 1d of claim 1. Schnittman discloses that embodiments of its autonomous robotic cleaners include a camera, such as the exemplary camera 1190 of Figure 11:

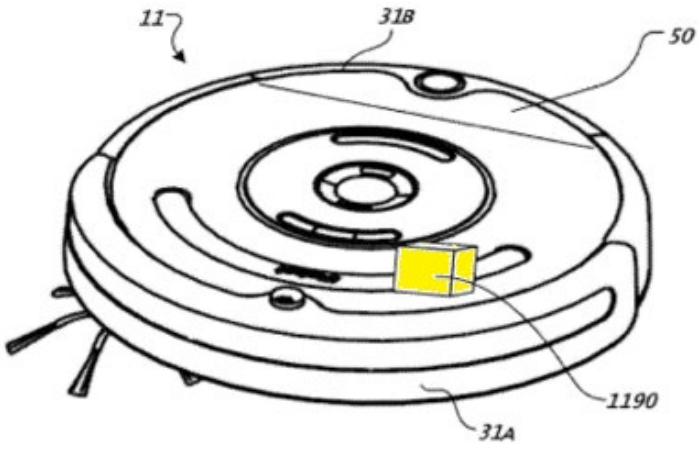

FIG. 11

EX1008, Fig. 11; *see also id.*, ¶¶[0045], [0204]-[0205].

482. The camera captures an image of at least a first object. Specifically, the camera "scan[s] an area substantially forward of the [robot]" as the "robot [moves] over the cleaning surface." EX1008, ¶¶[0045], [0204]. The camera is "in communication with [a] microprocessor 245," and the "microprocessor 245 … process[es] [a] signal from the camera … to recognize debris on the cleaning surface and maneuver the robot 11 toward the debris." *Id.*, ¶[0204]. Additionally, "the microprocessor 245 can process the signal from the camera 1190 to recognize obstacles . . . in the vicinity of the robot 11 and maneuver the robot 11 to avoid obstacles . . . larger than a specific size threshold[.]" *Id.*, ¶[0205].

483. The debris, obstacles, and cleaning surface itself that are captured by Schnittman's camera and recognized by its microprocessor are examples of a first object. *See* Section XIII.A.1.e above. A POSA would have thus understood that Schnittman's camera captures an image of at least a first object: The microprocessor could not "recognize debris on the cleaning surface" absent an image of these objects captured by the camera.

484. While Schnittman does not disclose capturing an image of a objects "within the swimming pool," specifically, a pool-cleaner implementation of Schnittman in view of Benzler would capture such an image, and a POSA would have been motivated to pursue such an implementation for the reasons in Section XIII.D.1 above. Accordingly, Schnittman in view of Benzler renders obvious the

claimed "at least one camera [camera 1190] for capturing an image of at least a first object within the swimming pool."

f. Element 1e: "a controller (i) in electronic communication with the at least one camera and"

485. Schnittman discloses element 1e of claim 1. Schnittman discloses that embodiments of its autonomous robotic cleaners include a microprocessor, an example of which is the microprocessor 245 of Figure 2 (EX1008, ¶[0118]):

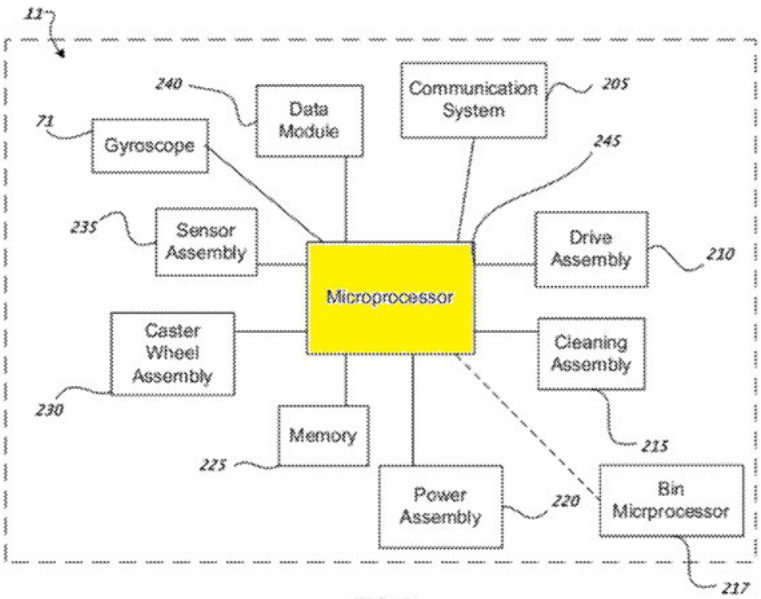

FIG. 2

Id., Fig. 2.

486. Schnittman's microprocessors are "capable of executing routines and generating and sending control signals" for "controlling [the robot's] drive assembly" and other components. *Id.*, ¶¶[0118]-[0119], [0177]. In the example of Schnittman's Figure 2, the routines executed by the microprocessor 245 are stored in the memory 225, and a data module 240 is configured to "upload new software

routines or values to the robot 11." *Id.*, ¶[0118]. Schnittman's microprocessor discloses the claimed "controller" because it controls operation of the autonomous cleaning robot and is similar to controllers described in the '207 Patent. For instance, the '207 Patent describes that its controller may be implemented using "one or more processing units … that execute[] sequences of instructions contained in a memory," with the execution of such sequences "caus[ing] the processing unit to perform steps such as generating control signals." EX1005, 4:18-28 ("The instructions may be loaded in a random access memory (RAM) for execution by the processing unit from a read only memory (ROM), a mass storage device, or some other persistent storage."). Schnittman's microprocessor 245 likewise executes routines stored in memory to generate control signals for controlling the robot, and the microprocessor 245 thus discloses the claimed "controller." EX1008, ¶¶[0118]-[0119], [0177].

487. Schnittman discloses that its microprocessor is in communication with the robot's camera and configured to process signals from the camera: "[C]amera 1190 can be in communication with the microprocessor 245 …. [T]he microprocessor 245 can process the signal from the camera 1190 to recognize debris on the cleaning surface and maneuver the robot 11 toward the debris. Additionally or alternatively, the microprocessor 245 can process the signal from the camera 1190 to recognize obstacles and/or debris in the vicinity of the robot 11 and maneuver the

robot 11 to avoid obstacles and/or debris ….” EX1008, ¶¶[0204]-[0205]. Schnittman thus discloses the claimed controller [microprocessor 245] “in electronic communication with the at least one camera [camera 1190].”

g. Element 1f: “[the controller] (ii) configured to generate, in response to the captured image, at least one control signal to cause movement of the body within the swimming pool to, or away from, the first object.”

488. Schnittman discloses element 1f of claim 1. Schnittman discloses that its microprocessor (“controller”) generates commands (“control signals”) to cause movement of the robot and its body: “The drive assembly 210 is connected to the microprocessor 245” and “is operable to receive commands from the microprocessor 245.” EX1008, ¶[0119]; *see also id.*, ¶[0177] (“The microprocessor [245] can move the robot 11 through one or more of the spot coverage patterns below by controlling the drive assembly 210 based at least in part on a signal received from the gyroscope 71.”). The control signals generated by Schnittman’s microprocessor can cause the robot to move based on detected debris and/or in different cleaning patterns, including those of Figures 10A and 10B (*id.*, ¶¶[0177], [0191]-[0203]):

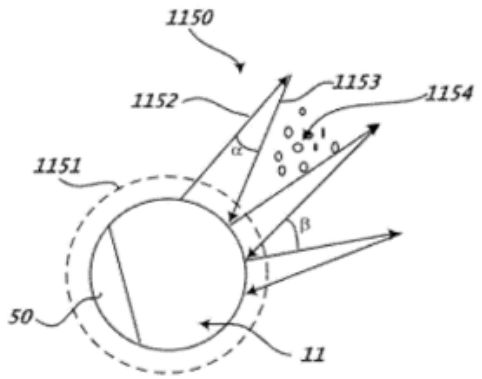

FIG. 10A

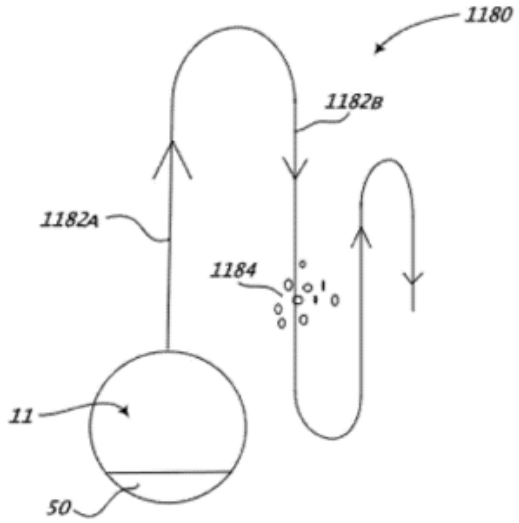

FIG. 10B

Id., Figs. 10A, 10B.

489. Accordingly, Schnittman discloses the claimed controller configured to generate control signals to cause movement of the robot's body.

490. Schnittman further discloses the generation of such control signals "in response to the captured image." Schnittman states that its camera "can be in communication with the microprocessor 245 such that the movement of the robot 11 over the cleaning surface can be based at least in part on the detection of debris and/or an obstacle by the camera 1190." EX1008, ¶[0204]. Schnittman further explains that its microprocessor "can process the signal from the camera" and control movement of the robot accordingly. *Id.*, ¶¶[0204]-[0205]. A POSA would thus understand that Schnittman's microprocessor generates control signals for moving the robot based on ("in response to") the image captured by the robot's camera. Such

control signals "cause movement of the [robot's] body … to, or away from, the first object," as claimed:

> [T]he microprocessor 245 can process the signal from the camera 1190 to recognize debris on the cleaning surface and ***maneuver the robot 11 toward the debris***. Additionally or alternatively, the microprocessor 245 can process the signal from the camera 1190 to recognize obstacles and/or debris in the vicinity of the robot 11 and ***maneuver the robot 11 to avoid obstacles and/or debris*** larger than a specific size threshold (e.g., a value less than about the smallest opening defined by the cleaning head).

EX1008, ¶¶[0204]-[0205].

491. The image captured by Schnittman's camera depicts an object, such as debris, obstacles, and cleaning surfaces (*see* Element 1d above), and the microprocessor processes the image to recognize debris or obstacles in it. Based on the recognized objects in the image, the microprocessor generates control signals for moving the robot toward or away from the objects. *Id.* Accordingly, Schnittman discloses the claimed controller "configured to generate, in response to the captured image, at least one control signal to cause movement of the body … to, or away from, the first object."

492. While Schnittman does not disclose the generation of control signals for causing movement "within the swimming pool," specifically, a POSA would have understood, in view of Benzler, how to adapt Schnittman's autonomous robotic cleaners for use in this context and would have been motivated to do so for the reasons in Section XIII.D.1 above. Therefore, Schnittman discloses "a controller

[microprocessor 245]" "configured to generate, in response to the captured image, at least one control signal to cause movement of the body within the swimming pool to, or away from, the first object."

493. Schnittman in view of Benzler renders obvious claim 1 of the '207 Patent.

3. Claim 2

a. Preamble: "A pool system comprising:"

494. To the extent limiting, Schnittman in view of Benzler would have rendered obvious the preamble of claim 2. The preamble of claim 2 is broader than that of claim 1 because it merely recites a "pool system," imposing no requirements, as claim 1 does, that the pool system be "self-propelled" or dedicated to "cleaning debris from a submerged surface of a swimming pool." Because Schnittman in view of Benzler would have rendered obvious the narrower preamble of claim 1, they likewise would have rendered obvious the broader preamble of claim 2 that eliminates the requirements of claim 1. Thus, Schnittman in view of Benzler renders obvious the claimed "pool system [underwater cleaning robot]."

b. Element 2a: "at least one piece of equipment for a swimming pool or spa;"

495. Schnittman in view of Benzler would have rendered obvious element 2a of claim 2. Schnittman describes autonomous robotic cleaners for removing debris from cleaning surfaces (*e.g.*, floors), which disclose the claimed "at least one

piece of equipment[.]" EX1008, ¶¶[0002], [0023], [0033]. For instance, Figure 14D depicts an exemplary autonomous robotic cleaner 11 and its maintenance station 1250 (*id.*, ¶¶[0097], [0216]-[0217]):

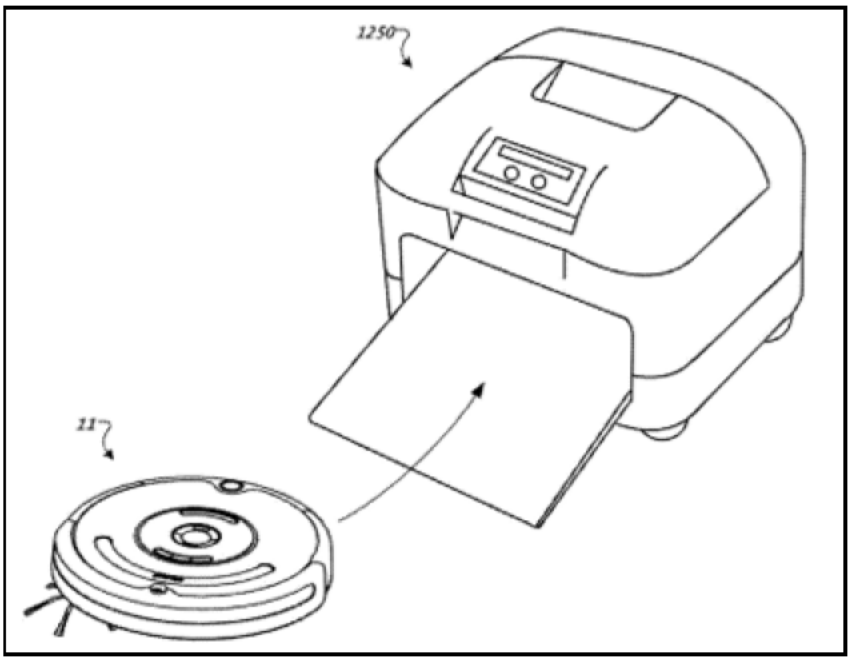

Id., Fig. 14D.

496. In embodiments, Schnittman's autonomous robotic cleaners include "debris agitators," such as brushes, that "sweep or otherwise agitate debris from the cleaning surface." *Id.*, ¶¶[0026], [0027], [0031], [0115], [0119], [0128], [0130]-[0131].

497. As explained in Section XIII.D.1 above, a POSA would have been motivated to apply Schnittman's teachings in the pool-cleaning context for cleaning submerged surfaces in view of Benzler. Therefore, Schnittman in view of Benzler

renders obvious the claimed "at least one piece of equipment for a swimming pool or spa" of element 2a.

c. Element 2b: "one or more cameras configured to capture video or images of at least a portion of a location including the swimming pool or spa; and"

498. Schnittman in view of Benzler would have rendered obvious element 2b of claim 2. Schnittman discloses that embodiments of its autonomous robotic cleaners include a camera, such as the exemplary camera 1190 of Figure 11:

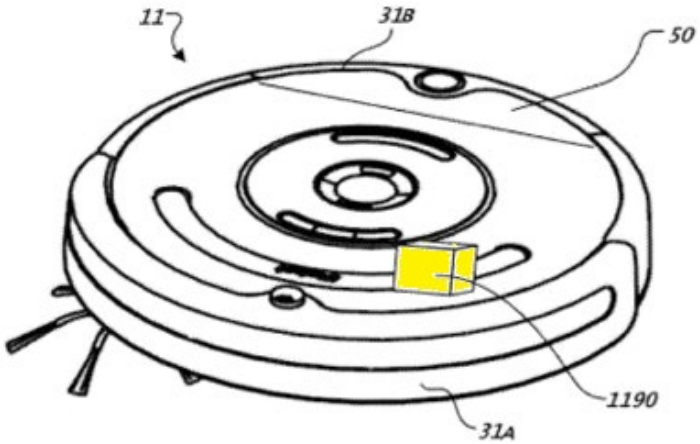

FIG. 11

EX1008, Fig. 11; *see also id.*, ¶¶[0045], [0204]-[0205]; Section X.B above.

499. The camera captures images of at least a portion of a location. Specifically, the camera "scan[s] an area substantially forward of the [robot]" as the "robot [moves] over the cleaning surface." EX1008, ¶¶[0045], [0204].

500. While Schnittman does not disclose that the image-captured location is a "swimming pool or spa," specifically, a pool-cleaner implementation of

Schnittman in view of Benzler would capture such images, and a POSA would have been motivated to pursue such an implementation for the reasons in Section XIII.D.1 above. Accordingly, Schnittman in view of Benzler renders obvious the claimed "one or more cameras [camera 1190] configured to capture video or images of at least a portion of a location including the swimming pool or spa."

d. Element 2c: "a controller in communication with the at least one piece of equipment and the one or more cameras, the controller configured to receive visual data from the one or more cameras and determine a control action for the at least one piece of equipment based on the received visual data."

501. Schnittman discloses element 2c of claim 2. As explained above with respect to element 1e, Schnittman's microprocessor 245 teaches the claimed "controller." Section XIII.D.2.f above.

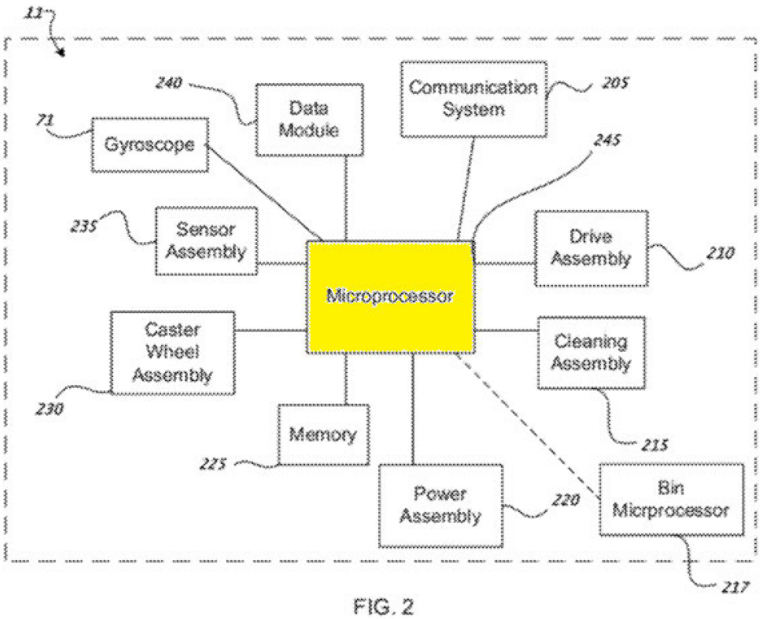

FIG. 2

EX1008, Fig. 2.

502. Schnittman further teaches that its control system is in communication with both the underwater cleaning robot as well as the monitoring cameras 2. Schnittman's microprocessors are "capable of executing routines and generating and sending control signals" for "controlling [the robot's] drive assembly" and other components. *Id.*, ¶¶[0118]-[0119], [0177]. Additionally, Schnittman discloses that its microprocessor is in communication with the robot's camera and configured to process signals from the camera: "[C]amera 1190 can be in communication with the microprocessor 245 …. [T]he microprocessor 245 can process the signal from the camera 1190 to recognize debris on the cleaning surface and maneuver the robot 11 toward the debris. Schnittman thus discloses the claimed "controller in communication with the at least one piece of equipment and the one or more cameras[.]"

503. Schnittman also discloses that the controller receives visual data from the cameras and determines a control action for the robot based on that visual data. As explained with respect to element 1f, Schnittman discloses that its microprocessor ("controller") generates commands ("determines a control action") to cause movement ("control action") of the robot: "The drive assembly 210 is connected to the microprocessor 245" and "is operable to receive commands from the microprocessor 245." EX1008, ¶[0119]. And Schnittman discloses that the

generation of such control signals is "based on the received visual data." Schnittman states that its camera "can be in communication with the microprocessor 245 such that the movement of the robot 11 over the cleaning surface can be based at least in part on the detection of debris and/or an obstacle by the camera 1190." *Id.*, ¶[0204].

504. Therefore, Schnittman discloses "a controller [microprocessor 245] in communication with the at least one piece of equipment [cleaning robot 11] and the one or more cameras [camera 1190], the controller configured to receive visual data from the one or more cameras and determine a control action for the at least one piece of equipment based on the received visual data."

505. Schnittman in view of Benzler renders obvious claim 2.

4. Dependent Claim 3: "The pool system of claim 2, wherein the at least one piece of equipment comprises a cleaning device with one or more propulsion mechanisms, the cleaning device configured to travel adjacent to submerged or water-containing surfaces of the swimming pool or spa and to perform a cleaning operation."

506. Schnittman in view of Benzler would have rendered obvious claim 3. The underwater cleaning robot of the Schnittman/Benzler combination (*i.e.*, "the at least one piece of equipment") is a cleaning device for cleaning submerged surfaces. *See* Section XIII.D.2 above.

507. As explained above for element 1b, Schnittman discloses "means for moving the vehicle body within the swimming pool," and also discloses that the

robot includes "one or more propulsion mechanisms," *e.g.*, right and left differentially driven wheels 45, right and left wheel motors, and wheel encoders. *Id.*, ¶[0119].

508. Schnittman also teaches that its robot is configured to travel adjacent to a cleaning surface to perform a cleaning operation. Schnittman's "drive system is coupled to the [robot's] housing and configured to maneuver the robot across a cleaning surface." *Id.*, ¶[0005]. A POSA would have been motivated to apply Schnittman's teachings in the pool-cleaning context in view of Benzler. Section XIII.D.1. Benzler's teaching of "pool robotic vehicles [that] drive in particular on the bottom of a pool" using wheels powered by a drive motor (*id.*, ¶¶[0028], [0051], Fig. 3) provides a drive system similar to that of Schnittman, reinforcing that Schnittman's similar motor-powered wheels 45 could be readily adapted for underwater use.

509. Therefore, the Schnittman/Benzler combination discloses a robot that travels underwater along a pool floor (*i.e.*, "adjacent to submerged or water containing surfaces of the swimming pool"). As it travels, the underwater robot performs "a cleaning operation" such as brush-cleaning the pool surfaces through debris agitators, as explained above for the preamble of claim 1.

510. Thus, Schnittman in view of Benzler renders obvious claim 3.

5. Dependent Claim 4: "The pool system of claim 2, wherein the one or more cameras are mounted external to the swimming pool or spa."

511. Schnittman in view of Benzler would have rendered obvious claim 4. Schnittman discloses an embodiment of a surface cleaning robot with an onboard camera. EX1008, Fig. 11; *see also id.*, ¶¶[0045], [0204]-[0205]; Section X.B. I further note that Schnittman's claim 1 does not limit the camera to be on the robot - it just says, "a debris sensor having a field of view beyond a perimeter of the cleaning apparatus, wherein the debris sensor is configured to detect debris or an obstacle on the floor." *See also* claims 4, 5 of Schnittman. Schnittman's disclosure thus encompasses an off-board camera. In any event, Benzler shows external cameras used to guide pool-cleaning robots were also well known. EX1013, ¶¶[0053], [0054].

512. A POSA would have recognized the advantages of implementing the Schnittman/Benzler pool cleaning robot with Benzler's external camera 8. Benzler emphasizes that the external camera 8 is positioned above the pool so that it can capture a broad, global view of the entire pool. *Id.*, ¶[0010] ("The camera is preferably arranged above the work area, so that a section of the work area can be detected that is as big as possible with the camera .... It is furthermore possible to arrange the at least one camera … in such a way that it follows the movement of the robotic vehicle."). A POSA would understand that this overhead perspective

provides additional information that Schnittman's onboard cameras cannot capture; while Schnittman's onboard cameras would observe only a partial, local region within the pool, Benzler's external camera provides a complete, unobstructed view of the entire pool along with the robot's exact location, orientation, and trajectory. A POSA would therefore understand that the external camera facilitates a more accurate monitoring and control of the robot. A POSA would have had a reasonable expectation of success in making this combination using routine, well-known techniques for connecting a robot to an external device. In fact, Schnittman itself describes well-known wireless communication methods between the robot's bin 50 and a remote indicator 1202, such as "IEEE 801.11/WiFi, BlueTooth, Zigbee, wireless USB, a frequency modulated signal, an amplitude modulated signal, or the like." EX1008, [0213]. A POSA could have easily integrated external camera 8 with robot 11 using known communication methods.

513. Thus, Schnittman in view of Benzler renders obvious "wherein the one or more cameras are mounted external to the swimming pool or spa."

6. Dependent Claim 5: "The pool system of claim 2, wherein the one or more cameras are mounted on the at least one piece of equipment."

514. Schnittman in view of Benzler would have rendered obvious claim 5. As explained above for element 1d, the Schnittman/Benzler pool-cleaning robot includes an onboard camera, *i.e.*, camera 1190 of Schnittman. Schnittman in view

of Benzler thus renders obvious "wherein the one or more cameras are mounted on the at least one piece of equipment."

7. Dependent Claim 6: "The pool system of claim 2, wherein the one or more cameras are submergible or submerged within the swimming pool or spa."

515. Schnittman in view of Benzler would have rendered obvious claim 6. A POSA would have been motivated to implement Schnittman's robot for underwater cleaning operations in a pool in view of Benzler. *See* Section XIII.D.1 above. Implemented as such, Schnittman's camera 1190 is "submergible or submerged within the swimming pool." By the time of the '207 Patent, the necessary adaptations to render a system water-ready were straightforward and within a POSA's skill.

516. Thus, Schnittman in view of Benzler renders obvious "wherein the one or more cameras are submergible or submerged within the swimming pool or spa."

8. Dependent Claim 7: "The pool system of claim 2, wherein the controller is configured to detect a characteristic of the location based on the visual data and control the piece of equipment based on the detected characteristic."

517. Schnittman in view of Benzler would have rendered obvious claim 7. As recited in Section X.B above, the control signals generated by Schnittman's microprocessor ("controller") can cause the robot to move based on detected debris or obstacles, as shown in Figures 10A and 10B (EX1008, ¶¶[0177], [0191]-[0203]):

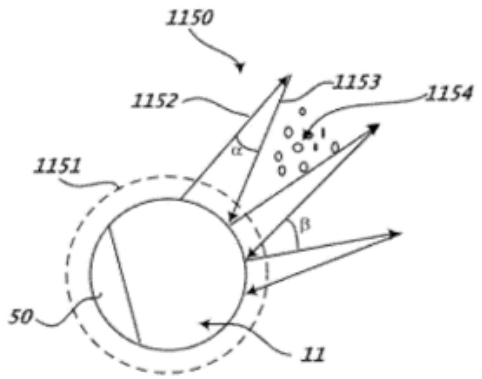

FIG. 10A

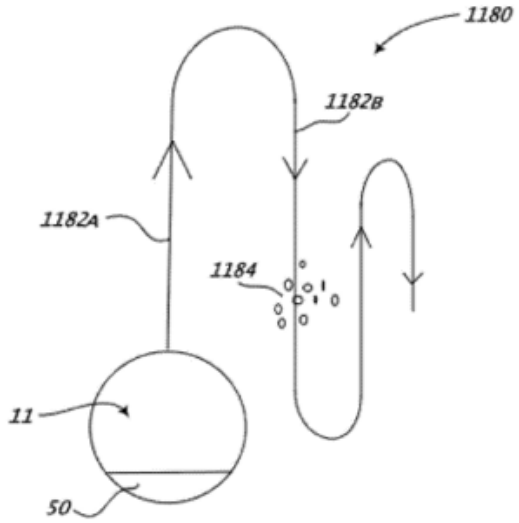

FIG. 10B

Id., Figs. 10A, 10B.

518. Whether or not debris or an obstacle is on the cleaning surface is a "characteristic of the location[,]" as required by claim 7. And, per claim 7, Schnittman's microprocessor is configured to detect this characteristic "based on the visual data and control the piece of equipment based on the detected characteristic." Schnittman recites:

> [T]he microprocessor 245 can process the signal from the camera 1190 to recognize debris on the cleaning surface and ***maneuver the robot 11 toward the debris***. Additionally or alternatively, the microprocessor 245 can process the signal from the camera 1190 to recognize obstacles and/or debris in the vicinity of the robot 11 and ***maneuver the robot 11 to avoid obstacles and/or debris*** larger than a specific size threshold (e.g., a value less than about the smallest opening defined by the cleaning head).

EX1008, ¶¶[0204]-[0205].

519. Thus, Schnittman in view of Benlzer renders obvious "wherein the controller is configured to detect a characteristic of the location based on the visual data and control the piece of equipment based on the detected characteristic."

9. Dependent Claim 11: "The pool system of claim 2, wherein the controller is remote from the camera."

520. Schnittman in view of Benzler would have rendered obvious claim 11. As described in Section XIII.D.5 for claim 4, a POSA would have recognized the advantages of implementing the Schnittman/Benzler pool cleaning robot with Benzler's external camera 8. Schnittman discloses an onboard controller (microprocessor 245) in communication with the camera to process the camera's images and guide the robot. A POSA would have been motivated to apply Benzler's external cameras with Schnittman's onboard controller, making "the controller [] remote from the camera" in the Schnittman/Benzler underwater robot. I further note that Schnittman alone discloses this limitation. The limitation does not require the camera to be off the robot. As shown in Schnittman Figure 2, the sensor assembly is remote from the microprocessor.

521. Thus, Schnittman in view of Benzler renders obvious claim 11.

10. Claim 12

a. Preamble: "A method for monitoring a pool system, the method comprising:"

522. To the extent limiting, the preamble of claim 12 would have been rendered obvious by Schnittman in view of Benzler. A POSA would have been motivated to implement Schnittman's robot as an underwater pool cleaner in view of Benzler. *See* Section XIII.D.1 above.

523. Schnittman's cleaning robot comprises an onboard camera 1190 to continuously capture an image of a cleaning surface. EX1013, ¶¶[0045], [0204]-[0205]. In the Schnittman/Benzler combination, the pool-cleaning robot captures images of surfaces of a pool and evaluates that image to assess the presence of debris. *Id*. Based on this assessment, the robot accordingly cleans the pool by adjusting its cleaning movements and wheels. *Id*. This continuous image capture and analysis for determining the cleanliness of the pool comprises the claimed "method for monitoring a pool system." Based on this monitoring, the robot autonomously adjusts its cleaning operations. *Id*.

524. Thus, Schnittman in view of Benzler render obvious the Preamble of claim 12.

b. Element 12a: "receiving images of at least a portion of a location including a swimming pool or spa from one or more cameras;"

525. Schnittman in view of Benzler would have rendered obvious element 12a of claim 12. As explained above with respect to elements 1d-1f and 2b-2c, Schnittman's cleaning robot with onboard camera is configured to capture images of a cleaning surface ("location"), and microprocessor 245 is configured to receive these images. EX1008, ¶[0204]; Sections XIII.D.2.e-g., XIII.D.3.c-d.

526. While Schnittman does not disclose that the images of the location "includ[e] a swimming pool or spa," specifically, a POSA would have been motivated to implement Schnittman's cleaning robot as a pool-cleaning robot in view of Benzler. *See* Section XIII.D.1 above. Thus, Schnittman in view of Benzler renders obvious "receiving images of at least a portion of a location including a swimming pool or spa from one or more cameras."

c. Element 12b: "determining a target area and detecting a characteristic of the target area based on the images; and"

527. Schnittman discloses 12b of claim 12. With reference to the analysis of claim 7, Schnittman's cleaning robot captures images of a surface defined for cleaning ("target area") and determines whether or not debris or an obstacle is on the cleaning surface, which is "a characteristic of the target area[,]" as required by element 12b. EX1008 ¶¶[0204]-[0205]; Section XIII.D.8. Schnittman determines

the target area based on where its camera faces. *Id.* Its camera sits "toward the forward portion of the robot 11, with a field of view beyond the perimeter of the robot 11[.]" *Id.*, ¶[0204].

528. Thus, Schnittman discloses "determining a target area and detecting a characteristic of the target area based on the images."

d. Element 12c: "generating a control response based on the detected characteristic of the target area."

529. Schnittman discloses element 12c of claim 12. Schnittman discloses moving a cleaning robot based on the presence of debris or obstacles on a cleaning surface. EX1008, ¶¶[0204]-[0205]; Section X.B. The presence of objects is a characteristic of a target area detected based on images from a camera on the robot. EX1008, ¶¶[0204]-[0205]. Schnittman's microprocessor receives images from the camera and instructs the driving assembly to move ("control response") based on the received images. *Id.*, ¶¶[0119], [0204]-[0205]. "[T]he microprocessor 245 can process the signal from the camera 1190 to recognize debris on the cleaning surface and maneuver the robot 11 toward the debris." The drive assembly is "operable to receive commands from the microprocessor 245" for controlling the movement ("control response") of the robot. *Id.*, ¶[0119], [0177].

530. Thus, Schnittman discloses "generating a control response based on the detected characteristic of the target area."

11. Dependent Claim 13: "The method of claim 12, wherein the target area comprises a portion of a surface of the swimming pool or spa, and wherein the characteristic comprises a cleanliness characteristic of the portion of the surface of the swimming pool or spa."

531. Schnittman in view of Benzler would have rendered obvious claim 13. A POSA would have been motivated to implement Schnittman's robto as a pool-cleaning robot in view of Benzler (*see* Section XIII.D.1 above) such that the target area would be a portion of a surface of the swimming pool or spa, as claimed. Further, Schnittman discloses detecting debris ("cleanliness characteristic") on a cleaning surface using a camera mounted on a cleaning robot. EX1008 ¶¶[0204]-[0205]; Section X.B. This discloses "wherein the characteristic comprises a cleanliness characteristic of the portion of the surface," as required by claim 13.

532. Thus, Schnittman in view of Benzler renders obvious "wherein the target area comprises a portion of a surface of the swimming pool or spa, and wherein the characteristic comprises a cleanliness characteristic of the portion of the surface of the swimming pool or spa."

12. Dependent Claim 14: "The method of claim 12, wherein generating the control response comprises controlling an operation of a piece of equipment of the swimming pool or spa."

533. Schnittman in view of Benzler would have rendered obvious claim 14. Schnittman discloses generating a control response (*i.e.*, generating commands to

move the cleaning robot) based on a detected characteristic (*i.e.*, the cleanliness) of a targeted area. In the Schnittman/Benzler combination, the generation of the control response controls the movement (*i.e.*, "an operation") of the pool-cleaning robot (*i.e.*, "a piece of equipment") of the swimming pool or spa.

13. Dependent Claim 19: "The method of claim 12, wherein generating the control response comprises controlling operation of a cleaning device configured to travel adjacent to submerged or water-containing surfaces of the swimming pool or spa and to perform a cleaning operation, wherein controlling operation of the cleaning device comprises one or more of controlling a path or route of the cleaning device, an aggressiveness of cleaning chemicals deployed, an aggressiveness of mechanical cleaning, or a speed of the cleaning device."

534. Schnittman in view of Benzler would have rendered obvious claim 19. As explained above for claim 3, the combination of Schnittman and Benzler renders obvious controlling a pool-cleaning robot such that it "travel[s] adjacent to submerged or water-containing surfaces of the swimming pool or spa and [] perform[s] a cleaning action." *See* Section XIII.D.4 above. Accordingly, Schnittman in view of Benzler renders obvious "wherein generating the control response comprises controlling operation of a cleaning device configured to travel adjacent to submerged or water-containing surfaces of the swimming pool or spa and to perform a cleaning operation" of claim 19.

535. Further, as explained above for claim 14, Schnittman in view of Benzler renders obvious generating control signals that cause the robot to move towards or away from debris, thus "controlling a path or route of the cleaning device," as claimed and as shown in Figures 10A and 10B of Schnittman:

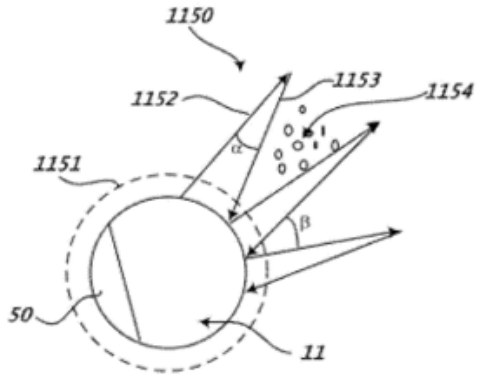

FIG. 10A

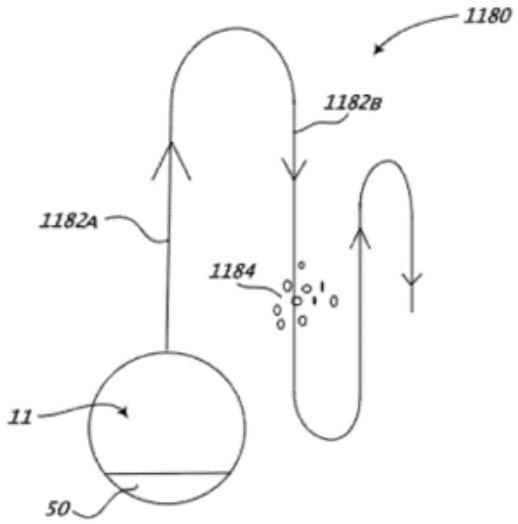

FIG. 10B

Id., Figs. 10A, 10B.

536. Accordingly, Schnittman in view of Benzler renders obvious "wherein controlling operation of the cleaning device comprises one or more of controlling a path or route of the cleaning device, an aggressiveness of cleaning chemicals deployed, an aggressiveness of mechanical cleaning, or a speed of the cleaning device."

E. Ground 2b: Claim 8 Would Have Been Obvious Over Schnittman In View Of Benzler, In Further View Of Fu

537. A POSA would have been motivated to combine Fu with the Schnittman/Benzler pool-cleaning robot because Fu is directed to an autonomous robotic cleaner that uses image-derived information to guide its movement and cleaning similar to the Schnittman/Benzler robot. Fu permits the robot's controller to be configured with a threshold cleanliness such that the robot can use its existing camera and ability to detect debris to compare the cleanliness of the pool surface to a set threshold and ensure the pool is cleaned to a level specified by a user. EX1007, ¶[0026]. This combination promotes more focused cleaning and energy-saving opportunities.

1. Dependent Claim 8: "The pool system of claim 7, wherein the characteristic comprises a cleanliness of a surface of the swimming pool, and wherein the controller is configured to control the piece of equipment based on the detected cleanliness being outside of a threshold."

538. Schnittman in view of Benzler renders obvious detecting a "cleanliness" of a surface of a swimming pool. *See* Section XIII.D.11 (claim 13) above. The movement of the pool-cleaning robot is controlled based on the cleanliness characteristic. EX1008, ¶¶[0204]-[0205]. Schnittman in view of Benzler also renders obvious "wherein the controller is configured to control the piece of equipment based on the detected cleanliness being outside of a threshold,"

as recited in claim 8. Specifically, Schnittman discloses the use of a threshold to avoid debris larger than a specified size:

> [T]he microprocessor 245 can process the signal from the camera 1190 to recognize debris on the cleaning surface and maneuver the *robot 11 toward the debris*. Additionally or alternatively, **the microprocessor 245 can process the signal from the camera 1190 to recognize obstacles and/or debris in the vicinity of the robot 11 and maneuver the robot 11 to avoid obstacles and/or debris larger than a specific size threshold** (e.g., a value less than about the smallest opening defined by the cleaning head).

EX1008, ¶¶[0204]-[0205].

Large debris on the surface is clearly a cleanliness characteristic. I note that claim 8 requires the detected cleanliness to be "outside of a threshold." The claim does not specify whether the cleanliness must be above or below the threshold value. Nor does the claim specify a direction (*e.g.*, toward or avoiding the debris) the piece of equipment must be controlled. Schnittman discloses processing the signal from the camera to recognize debris on the cleaning surface and then using a threshold (*e.g.*, a value less than about the smallest opening defined by the cleaning head) to avoid the debris. Schnittman is thus configured to control the piece of equipment based on the detected cleanliness (*i.e.*, the detected debris) being outside of a threshold.

Should the Board conclude that this limitation is not met by Schnittman because moving away from debris based on a threshold is not considered to teach, "control the piece of equipment based on the detected cleanliness," it would be obvious to a POSA to that Schnittman nevertheless teaches using a cleanliness threshold to move toward debris. The same passage from Schnittman reproduced above discloses that "microprocessor 245 can process the signal from the camera 1190 to recognize debris on the cleaning surface and maneuver the robot 11 toward the debris." This is followed by the words "Additionally or alternatively" followed by the passage discussed above in which the robot recognizes and avoids large debris. Logic dictates that if the robot avoids large debris above a size threshold, but it still (additionally) uses signals from a camera to "recognize debris on the cleaning surface and maneuver the robot 11 toward the debris," the robot will only move toward the debris if the debris falls below the size threshold that would invoke the avoidance control. Since "above" and "below" are both outside a threshold, Schnittman in view of Benzler teaches this limitation.

539. However, to the extent the Board disagrees that Schnittman in view of Benzler renders obvious controlling the piece of equipment "based on the detected cleanliness being outside of a threshold," this limitation is nonetheless obvious over Schnittman and Benzler, in further view of Fu. A POSA would have been motivated to combine Fu with the Schnittman/Benzler pool-cleaning robot because Fu is

directed to an autonomous robotic cleaner that uses image-derived information to guide its movement and cleaning similar to the Schnittman/Benzler robot. Fu permits the robot's controller to be configured with a threshold cleanliness such that the robot can use its existing camera and ability to detect debris to compare the cleanliness of the pool surface to a set threshold and ensure the pool is cleaned to a level specified by a user. EX1007, ¶[0026]. This combination promotes more focused cleaning and energy-saving opportunities.

Fu discloses a central processor that uses an image of debris on a pool surface captured by monitoring cameras 2 to assess a "level of cleanliness" of the pictured region of the pool as compared against a "pool cleanliness image threshold." EX1007, ¶[0026]. Based on that assessment, the central processor "plans its cleaning movements and adjusts the working state of the four cleaning driving wheels 3" to "perform tasks such as moving forward, backward, [and] turning." *Id.* A POSA would have been motivated to control the movement of the Schnittman/Benzler pool-cleaning robot based on the detected cleanliness being outside of a threshold as taught by Fu.

540. Applying Fu's threshold cleanliness to the Schnittman/Benzler combination would have been obvious because the application allows the pool-cleaning robot to clean the swimming pool to a threshold cleanliness set by a user. A POSA would have understood that implementing Fu's threshold-based cleanliness

assessment in the Schnittman/Benzler combination would yield a pool cleaner capable of focusing cleaning efforts on dirty areas (i.e., sub-threshold areas), while avoiding unnecessary cleaning of already-clean areas (i.e., above-threshold areas), thus improving cleaning efficiency. Threshold-based cleaning was conventional at the time, and implementing Fu's threshold-based cleanliness assessment in the Schnittman/Benzler combination would have required no more than routine software configurations to microprocessor 245, which already processes an image from a camera to recognize debris and maneuver the robot accordingly. Thus, this combination would have been well within a POSA's skill.

541. Thus, Schnittman in view of Benzler and Fu renders obvious "wherein the characteristic comprises a cleanliness of a surface of the swimming pool, and wherein the controller is configured to control the piece of equipment based on the detected cleanliness being outside of a threshold."

XIV. CONCLUSION

542. Based on the foregoing analysis, it is my opinion that the above described claims of the challenged patents are anticipated and/or obvious over the applied prior art as described herein.

XV. RESERVATION OF RIGHTS

543. This declaration presents my opinions to date. As additional data, information, testimony, or expert reports from the various defendants become

available to me or are provided to me, I may consider this information and I may find it appropriate to revise or supplement my analysis, opinions, and conclusions. Thus, I reserve the right to modify or supplement this declaration and the opinions contained herein.

I hereby declare that all statements made herein of my own knowledge are true and that all statements made on information and belief are believed to be true; that these statements were made with knowledge that willful false statements and the like so made are punishable by fine or imprisonment, or both, under 18 U.S.C. § 1001; and further that such willful false statements may jeopardize the validity of the application or any patent issued thereon. I declare under penalty of perjury under the laws of the United States of America that the foregoing is true and correct.

Executed on November 25, 2025.

Dr. Charles F. Reinholtz

APPENDIX A

APPENDIX A

MATERIALS REVIEWED

EX1001	U.S. Patent No. 11,003,191 (the "'191 Patent")
EX1002	File History of the '191 Patent
EX1003	U.S. Patent No. 11,262,766 (the "'766 Patent")
EX1004	File History of the '766 Patent
EX1005	U.S. Patent No. 11,880,207 (the "'207 Patent")
EX1006	File History for the '207 Patent
EX1007	CN 101139007 B ("Fu")
EX1008	U.S. Patent Pub. No. 2012/0169497 ("Schnittman")
EX1009	File History of U.S. Patent Application No. 16/416,840
EX1010	[Reserved]
EX1011	U.S. Provisional Application 61/428,808 (the "'808 provisional")
EX1012	Redline comparison between Schnittman and the '808 provisional
EX1013	U.S. Patent Pub. No. 2010/0299016 ("Benzler")
EX1014	International Patent Pub. No. 2012/023676 ("Hong")
EX1015	U.S. Patent Pub. No. 2012/0006352 ("Holappa")
EX1016	U.S. Patent No. 5,205,174 ("Silverman")
EX1017	SubjuGator 2011, University of Florida, RoboSub 2011 Competition Paper Submission
EX1018	U.S. Patent No. 8,364,309 ("Bailey")
EX1019	U.S. Patent Pub. No. 2011/0139727 ("Hui")

EX1020	Merriam-Webster Dictionary, “object”, https://www.merriam-webster.com/dictionary/object (last visited Nov. 20, 2025)
EX1021	Eric Herman, The Birth of the Automatic Pool Cleaner, AQUA Magazine (Mar. 22, 2018)
EX1022	World’s first automatic vacuum cleaner soon in shops, Electrolux (Nov. 7, 2001)
EX1023	U.S. Patent No. 3,321,787 (“Myers”)
EX1024	Peter Rasch – Inventor of the Pool Cleaning Robot, Maytronics (Sept. 30, 2012)
EX1025	Emily Thompson, Diving into History: The Fascinating Evolution of Pool Cleaners & How They Changed the Way We Swim, Beatbot (Jan. 1, 2025)
EX1026	Jonathan Horgan & Daniel Toal, Computer Vision Applications in the Navigation of Unmanned Underwater Vehicles, IntechOpen (Jan. 1, 2009)
EX1027	U.S. Patent No. 5,613,261 (“Kawakami”)
EX1028	Team Blackfinn, Embry Riddle Aeronautical University, RoboSub 2011 Competition Paper Submission
EX1029	U.S. Patent No. 4,168,557 (“Rasch”)
EX1030	U.S. Patent No. 3,439,368 (“Myers II”)
EX1031	U.S. Patent No. 5,351,355 (“Chiniara”)

APPENDIX B

Charles F. Reinholtz

Business Address
Professor and Chair Emeritus
Embry-Riddle Aeronautical University
Department of Mechanical Engineering
600 S. Clyde Morris Blvd.
Daytona Beach, FL 32114
reinholc@erau.edu

Home Address
7 Riverwalk Dr. Unit 604
New Smyrna Beach, FL 32169
(540) 230-7225 (mobile)

Education

Doctor of Philosophy, University of Florida, Mechanical Engineering, 1983
Master of Engineering, University of Florida, 1980
Bachelor of Science, University of Florida, 1976

Full-time Industrial Experience

1978, Burroughs Corporation, Orlando, Florida, Design Engineer, Non-impact Printing Group
1989-1996 Milliken and Company, Spartanburg, South Carolina, summer employment and consulting involving textile equipment design

Academic Employment Experience

Virginia Polytechnic Institute and State University, Blacksburg, Virginia
Assistant Professor, September 1983 to August 1988, Tenure Granted
Associate Professor, August 1988 to August 1993
Professor, August 1993 to 2007
W. S. White Chair for Innovation in Engineering Education, Aug. 1996 to Aug. 1999
Assistant Department Head and ABET Review Chair, 1996-2002
Alumni Distinguished Professor, 2002-2007
Embry-Riddle Aeronautical University, Daytona Beach, Florida
Professor and Chair, Department of Mechanical Engineering, 2007-2017
Professor, Department of Mechanical Engineering, 2017-2022
Emeritus Professor and Chair, 2022-

Membership in Professional Organizations and Honor Societies

Society	Membership Grade
ASME	Fellow
SAE	Member
American Nuclear Society	Member 1995-1997
Tau Beta Pi	Member
Pi Tau Sigma	Member
Sigma Xi	Member
Epsilon Lambda Chi	Member
ASEE	Member, 1984-1987, 1998-99
AUVSI	Member

Professional Honors and Awards

Benton Engineering Council Service Key, University of Florida, 1976-1977.
Procter and Gamble Best Paper Award, 9th Applied Mechanisms Conference, October 1985.
Presidential Young Investigator Award, 1987-1992, National Science Foundation
Certificate of Teaching Excellence, Virginia Polytechnic Institute and State University, 1987-88, 1997-98 and 2001-02.

ASME Outstanding Faculty Advisor Award, 1989-1990 and 1991-92
Procter and Gamble Best Paper Award of Merit, 2nd National Applied Mechanisms and Robotics Conference, November 1991.
George Wood Best Applied Mechanism Design Paper Award, 2nd National Applied Mechanisms and Robotics Conference, November 1991.
Wine Award for Excellence in Teaching, Virginia Polytechnic Institute and State University, 1992.
Virginia Tech Academy of Teaching Excellence, Inducted 1992
Procter and Gamble Best Paper Award of Merit, 22nd ASME Mechanisms Conference, Scottsdale, Arizona, September 1992
ASME National Faculty Advisor Award, 1995.
Applied Mechanism Conference "Beyond the Call of Duty" Award for prodigious contributions to mechanism science, 1995.
W. S. White Chair for Innovation in Engineering Education, Aug. 1996 to Aug. 1998
Dean's Award for Excellence in Teaching, Virginia Tech College of Engineering, 1998
South-Pointing Chariot Award, 1999 Applied Mechanisms and Robotics Conference, for lifetime contributions to the mechanism's community
Ingersoll-Rand Faculty Award for Outstanding Contributions to the Mechanical Engineering Department, 2000
National Instruments Award for Best Application of Measurement and Automation for the Development of a Tele-Operated CASE CX-160 Excavator Using FieldPoint, National Instruments Week 2002, Austin Texas, Aug 12-15, 2002.
Virginia Tech Alumni Distinguished Professor, 2002-
Outstanding Faculty Member Award selected and awarded by the students in Mechanical Engineering, April 2003.
Fellow, American Society of Mechanical Engineers, 2003
Alumni Teaching Award, Virginia Polytechnic Institute and State University, 2004
National Instruments Virtual Instrumentation Applications Best Control Paper Award, Developing a Fully Autonomous Vehicle for Virginia Tech's Entry in the DARPA Grand Challenge," National Instruments NI Week 2006, Austin Texas.

ASME Distinguished Service Award, 2005
College of Engineering Certificate of Teaching Excellence, 2006-2007
Volusia Manufacture's Association "Friend of Industry" Award, 2013
Emeritus Professor and Emeritus Chair, Embry Riddle Aeronautical University, 2022

Funded Research

1. "Design Optimization of Spatial Mechanisms Subject to Real-World Constraints," National Science Foundation Grant MEA-8404313, June 15, 1984 through November 30, 1986, $47,979, 100% Responsibility.

2. "Presidential Young Investigator Award: Interactive Spatial Mechanism Synthesis," National Science Foundation, Grant No. DMC 8657828, June 15, 1987 through January 31, 1993, $312,000, 100% Responsibility.

3. "High-Speed Bearing Research," supported by the Industrial Drives Division of Inland Motor Corporation, Jan. 1, 1987 through Dec. 31, 1987, $15,000, 100% Responsibility.

4. "Analysis of Warhead Structures," Department of the Navy, July 24, 1987 to November 15, 1987, $99,348, Project Director with J. B. Kosmatka, R. H. Fries, A. L. Wicks, and L. D. Mitchell, Responsible for $19,535.

5. "Analysis of Warhead Structures, Year 2," Department of the Navy, October 30, 1987 to March 31, 1988, $174,000, Project Director with J. B. Kosmatka, R. H. Fries, A. L. Wicks, and L. D. Mitchell, Responsible for $12,908.

6. "Hull Joint Model Test," Georgia Institute of Technology, May 16, 1988 to Aug. 16, 1988, $10,141, Principal Investigator with R. H. Fries, Responsible for $5,071.

7. "Design of Variable-Geometry Truss Manipulators," Virginia Center for Innovative Technology (CIT), 10/1/88 to 9/31/89, $30,000, 100% Responsibility.

8. "Active Structures for Space Applications," 1/1/89 to 12/31/90, $200,000, Principal Investigator with H. H. Robertshaw, Responsible for $80,000.

9. "Computer-Aided Design of Fully-Wiped, Co-rotating Extruder Screws," Windward International and CIT, January 1, 1989 through December 31, 1989, $44,029, Principal Investigator with Sanjay Dhande, Responsible for $22,015.

10. "Construction of a NASP Mock-up," NASA Langley Research Center, February 1, 1989 to July 15, 1989, $51,692, Principal Investigator with W. F. O'Brien, A. L. Wicks, and J. Marchman.

11. "Design of Advanced Manipulators for Steam Generator Maintenance," Babcock & Wilcox Co., November 1, 1989 to August 15, 1990, $20,000, Principal Investigator with Sanjay Dhande, Responsible for $15,000.

12. "Calibration, Control and Menu Design for an Advanced Steam-Generator Maintenance Manipulator," Babcock and Wilcox Co., February 1, 1991 through January 31, 1992, $41,408, Principal Investigator with Sanjay Dhande, Responsible for $31,056.

13. "Calibration, Control and Menu Design for an Advanced Steam-Generator Maintenance Manipulator," Virginia Center for Innovative Technology, February 1, 1991 through January 31, 1992, $29,663, Principal Investigator with Sanjay Dhande, Responsible for $22,247.

14. "Computer-Aided Design and Manufacture of Extruder Screw Elements," Windward International and CIT, July 1, 1990 through June 30, 1991, $30,984, Principal Investigator with Sanjay Dhande, Responsible for $15,492.

15. "Design of a Cellulose Acetate Preconditioning Heat Exchanger," Tennessee Eastman Co., October 1990 through July 1991, $25,560, Principal Investigator with D. J. Nelson, Responsible for $9,876.

16. "Continued Steam Generator Manipulator Support Based on Kinematic Control and Investigation of Vision Based Approach," Babcock and Wilcox Co., October 1, 1991 through September 31, 1992, $40,000, Principal Investigator with A. L. Abbott, Responsible for $32,000.

17. "Cellulose Acetate Packaging Study," Tennessee Eastman Co., October 1991 through July 1992, $51,120, Principal Investigator with D. J. Nelson, Responsible for $19,752.

18. "Continued Steam Generator Manipulator Support Based on Kinematic Control and Investigation of Vision Based Approach," Virginia CIT, January 1, 1992 through December 31, 1992, $35,570, Principal Investigator with A. L. Abbott, Responsible for $28,456.

19. "Preliminary Design of a Medical Waste Processing Machine," Virginia Center for Innovative Technology, June 1, 1992 through August 31, 1992, $14,386, 100% Responsibility.

20. "Preliminary Design of a Medical Waste Processing Machine," Bioconversions Technologies, May 1, 1992 through January 31, 1993, $16,377, 100% Responsibility.

21. "Conceptual Design of an Advanced Reactor Vessel Inspection Manipulator," B&W Nuclear Services Company, March 1, 1992 through February 28, 1993, $30,000, 100% Responsibility.

22. "Engineering Development of a Medical Waste Processing Machine," Bioconversions Technologies, Aug. 15, 1992 to May 15, 1994, Principal Investigator with A. A. Kornhauser, $93,088, responsible for $46,544.

23. "Engineering Development of a Medical Waste Processing Machine," CIT, Aug. 15, 1992 to Aug. 14, 1993, Principal Investigator with A. A. Kornhauser, $90,988, responsible for $45,494.

24. "Enhancing the Capability and Performance of Nuclear Service Robots with Kinematic Analysis and Computer Vision," B&W Nuclear Services Co., Dec.1, 1992 to Nov. 30, 1993, with A. L. Abbott, $50,000, responsible for $40,000.
25. "Design of a Reactor Vessel Inspection Manipulator," B&W Nuclear Services, June 16, 1992 through June 15, 1993, $100,146, 100% responsibility.
26. "Design of an Automated Needle/Armature Tray Loader," Siemens Automotive, Sept. 1, 1993 to Aug. 31, 1994, $24,925, 100% Responsibility.
27. "Enhancing the Design and Performance of Nuclear Service Robots with Flexure Analysis, Computer Vision, and Optimization Techniques," B&W Nuclear Technologies, Dec.1, 1993 to Nov. 30, 1994, with A. L. Abbott, $40,000, responsible for $30,000.
28. "Enhancing the Design and Performance of Nuclear Service Robots with Flexure Analysis, Computer Vision, and Optimization Techniques," Center for Innovative Technology, Feb. 1, 1994 to Jan. 31, 1995, with A. L. Abbott, $47,023, responsible for $35,000.
29. "Design Studies for Nautilus," Nautilus, Inc, Jan.1, 1994 to Oct. 15, 1994, $7,723, 100% responsibility.
30. "Design Studies for Nautilus," Center for Innovative Technology, Jan.1, 1994 to Dec. 31, 1994, $13,795, 100% Responsibility.
31. "Rod Formation Dynamics," R. J. Reynolds Co., Jan. 1, 1994 to Dec. 31, 1994, with D. J. Nelson, 116,557, 50% Responsibility.
32. "A Short-term Proposal to Develop Cam-Design Software for Cadkey, Inc.," June 16, 1994 to Sept 15, 1994, $9,981, 100% Responsibility.
33. "Design of an Automated Injector Body Tray Loader," Siemens Automotive, Sept. 1, 1994 to Aug. 31, 1995, $20,744, 100% Responsibility.
34. "Design Studies for Nautilus," Nautilus, Inc, Dec 1, 1994 to Nov. 30, 1995, $23,731, 100% Responsibility.
35. "Design Studies for Nautilus," Center for Innovative Technology, Dec.1, 1994 to Dec. 31, 1995, $25,924, 100% Responsibility.
36. "Preliminary design and Equipment Selection for a Mulch-Making Machine," Fred Whitaker Co., June 1, 1995 to Dec. 31, 1995, $10,920, %100 Responsibility.
37. "Improving the Kinematic Control of Robots with Computer Vision," NSF, July 15, 1995 to June 30, 1996, $22,026, %100 Responsibility.
38. "Proposal to Increase Funding in Siemens Valve-Body Loader Project, "Siemens Automotive, $7,018, 100% Responsibility.
39. "Preliminary Design and Equipment Selection for a Mulch-Making Machine," CIT, June 1, 1995 to August 31, 1995, $8,185, %100 Responsibility.
40. "Design of a Personal Smith Machine," Nautilus, Inc, July 1, 1995 to Oct. 31, 1995, $12,273, 100% Responsibility.
41. "Development of Advanced Control Strategies for Variable Geometry Truss Manipulators," Batelle -Pacific Northwest Laboratory, Jan. 1, 1995 to June 31, 1995, $10,000, with R. J. Salerno, 10% Responsibility.
42. "Curriculum Renewal in Mechanical Engineering at Virginia Tech," NSF SUCCEED, Sept. 15, 1995 to Dec. 15, 1995, with Paul Tidwell, $4,500 (NSF), $4,677 (Cost Sharing), 50% Responsibility.
43. "Development of a Parallel Architecture Robotic Wrist," Triad Investors, Jan. 1, 1996 to May 31, 1997, $51,707, 100% Responsibility.

44. "Development of Advanced Control Algorithms for Variable Geometry Truss Manipulators," Batelle-Pacific Northwest Laboratory, Jan. 1, 1996 to June 31, 1996, $10,000, 100% Responsibility.

45. "Curriculum Renewal in Mechanical Engineering at Virginia Tech – Year 5," NSF SUCCEED, June 16, 1996 to June 15, 1997, $10,000 (NSF), $10,000 (Cost Sharing), 100% Responsibility.

46. "Technology Assessment for a Robotic Vacuum Cleaner," Servus Robots Incorporated, Sept.1, 1998 to Feb. 28, 1999 with John Bay, Bob Sturges, and Mike Deisenroth, $8,333, 25% Responsibility.

47. "Technology Assessment for a Robotic Vacuum Cleaner," Virginia CIT, Oct.1, 1998 to March 31, 1999 with John Bay, Bob Sturges, and Mike Deisenroth, $25,000, 25% Responsibility.

48. "MBC Guidance Project," Long-Airdox Company, August 1998 to July 1999, P.I.: R.H. Sturges, Co-P.I.'s: M. P. Deisenroth, C.F. Reinholtz. $100,000.

49. "MBC Guidance Project," Virginia Center for Innovative Technology (matching), August 1998 to July 1999, P.I.: R.H. Sturges, Co-P.I.'s: M. P. Deisenroth, C.F. Reinholtz. $100,000.

50. "Vertical Integration of Mechatronics at Virginia Tech," NSF SUCCEEED, Aug 1999 to July 2002, P.I.: W. R. Saunders, Co-P.I.'s: J. S. Bay, D. J. Leo, C.F. Reinholtz, $18,000/year for three years.

51. Development of a Remote-Controlled CASE CX-160 Excavator, Naval Surface Warfare Center, Dahlgren G-64 Division, February 2003 to September 2003, Co-PI with A. L. Wicks, $17,000

52. Investigation of Adaptive Structures for Morphing Aircraft, NASA Langley Research Center, $65,078, July 1,2002 to June 30, 2003, 25% (with H. Robertshaw and D. Inman).

53. Increased Scope for Delivery Orders 0019, Remote Control Excavator, Naval Surface Warfare Center, with Al Wicks, PI, $21,223.

54. Develop the Joint Unmanned Systems Experimentation and Research (JOUSTER) Site, U.S Army RDECOM STTC, Orlando, FL, June 10, 2004 to June 9, 2007, $12,200,000, C. Reinholtz, PI (55% Responsibility), A. Wicks, Co-PI (43% Responsibility), Carstensen Co-PI (2% Responsibility).

55. Virginia First Lego League 2004 Pilot High School Robotics Program, NASA Langley Research Center, Education Grant NNL04AA65G, $20,000, July 9, 2004 to July 8, 2005, 100% Responsibility

56. Virginia First Lego League NIA Outreach Program, National Institute of Aerospace, Grant No. VT-03-1, $8,000, February 1, 2005 to August 31, 2005, 100% Responsibility.

57. Heterogeneous Teams Of Autonomous Vehicles: Advanced Sensing And Control, Office of Naval Research, Dennis W. Hong, Naira V. Hovakimyan, Marty E. Johnson, Charles F. Reinholtz, Daniel J. Stilwell, A. L. Wicks, Craig A. Woolsey, Christopher L. Wyatt, 07/01/05 – 6/30/06, Total Funding: $1,050,000, C. F. Reinholtz share: $52,752.

58. Coordinated Sensing and Control for Surveillance and Tracking by Heterogeneous Autonomous Vehicle Teams, Daniel J. Stilwell, Christopher L. Wyatt, Craig A. Woolsey, Naira V. Hovakimyan, A. L. Wicks, Andy Kurdila, Charles Reinholtz and Michael Roan, Office of Naval Research 5/15/06 – 9/14/07, $1,417,500, Reinholtz share: $184,275.

59. Development Of An Autonomous Vehicle For The DARPA Urban Challenge, with Al Wicks and Dennis Hong, the Defense Advanced Research Projects Agency, 10/1/06 to 12/31/07, $999,274.

60. Development of a Drive-by-Wire Commercial Vehicle, General Dynamics Robotics Systems (GDRS), $54,256, 1-11-07 to 6-30-07.

61. Navigation And Autonomous Control For Nemesis, Applied Research Associates, Inc. (ARA), $61,513, 7-1-06 to 6-30-07
62. Dynamic Model of CAT 777-797 Haul Trucks for Autonomous Operation, Caterpillar, $74,303, 7-1-06 to 6-30-07
63. Boeing Digitally Manufactured UAV Project, $22,740, The Boeing Company, 10-15-2010 to 12-31-2010.
64. Reconnaissance and Autonomy for Small Robots – Canine (RASR-K9), Robotic Research, $17,951.50, 1-1-2011 to 4-30-2012
65. Proposal to Develop an Autonomous Maritime System to Compete in the International Maritime Robotics Competition, AUVSI and the Office of Naval Research, $30,000, 10-1-13 to 12-31-14.
66. Robotic Tool Kit (RTK) Logistics Automation, (OTA) #W15QKN-14-9-1002, U.S. Army TARDEC via Great Lakes Systems & Technology LLC, $75,000, August 2018 through September 2019, with Patrick Currier and Eric Coyle.
67. Continued Development of Robotic Tool Kit (RTK) Logistics Automation and RTK Training, (OTA) #W15QKN-14-9-1002, U.S. Army GVSC via Great Lakes Systems & Technology LLC, $100,000, November 2019 through November 2020, with Patrick Currier and Eric Coyle.

Refereed Papers in Major Technical Journals

1. Snorri Gudmundsson, Vladimir Golubev, Sergey Drakunov and Charles Reinholtz, "Bio-Inspired Methodologies for Energy Conservation and Harvesting Flight-Path Modeling for Unmanned Aerial System," AIAA Journal of Aerospace Information Systems, Volume 16, Number 7, July 2019, https://doi.org/10.2514/1.I010597.
2. Christine M. Dailey, Charles Reinholtz, Thais Russomano, Michael Schuette, Rafael Baptista, Rodrigo Cambraia, "Resistance Exercise Machine within Lower Body Negative Pressure for Counteracting Effects of Microgravity", *Gravitational and Space Research*, Vol 2, No. 1ISSN: 0898-4697, 2014.
3. Hockley, C. J., Zuercher, T.A., Patel, H.V., Gamble, G.A., Kennedy, C.L. Coyle E.J., P.N. Currier, and C.F. Reinholtz, The Development of the ERAU Maritime RobotX Challenge Autonomous System, AUVSI North America, May 2014.
4. Jesse Hurdus, Andrew Bacha, Cheryl Bauman, Stephen Cacciola, Ruel Faruque, Peter King, Chris Terwelp, Patrick Currier, Dennis Hong, and Alfred Wicks and Charles Reinholtz, "VictorTango Architecture for Autonomous Navigation in the DARPA Urban Challenge," *AIAA Journal of Aerospace Computing, Information, and Communication*, Vol. 5, December 2008, DOI: 10.2514/1.40547.
5. Charles Reinholtz, Dennis Hong, Al Wicks, Andrew Bacha, Cheryl Bauman, Ruel Faruque, Michael Fleming, Chris Terwelp, Thomas Alberi, David Anderson, Stephen Cacciola, Patrick Currier, Aaron Dalton, Jesse Farmer, Jesse Hurdus, Shawn Kimmel, Peter King, Andrew Taylor, David Van Covern, Mike Webster, "Odin: Team VictorTango's entry in the DARPA Urban Challenge," Springer Tracts in Advanced Robotics 56, ISBN 978-3-642-03990-4, Edited by Martin Buehler, Karl Iagnemma, Sanjiv Singh, 2009.
6. Andrew Bacha, Cheryl Bauman, Ruel Faruque, Michael Fleming, Chris Terwelp, Charles Reinholtz, Dennis Hong, Al Wicks, Thomas Alberi, David Anderson, Stephen Cacciola, Patrick Currier, Aaron Dalton, Jesse Farmer, Jesse Hurdus, Shawn Kimmel, Peter King, Andrew Taylor, David Van Covern, Mike Webster, "Odin: Team VictorTango's entry in the DARPA Urban Challenge," *Journal of Field Robotics*, Vol. 25, No. 8, pg 467-492, 2008

7. David G. Schmale III, Benjamin R. Dingus, Charles Reinholtz, “Development and Application of an Autonomous Unmanned Aerial Vehicle for Precise Aerobiological Sampling Above Agricultural Fields,” *Journal of Field Robotics*, Vol. 25. No. 3, pg 133-147, 2008, Copyright 2008 Wiley Periodicals, Inc.

8. Michael J. Furey, Charles F. Reinholtz, and Brian Vick, “Metal Transfer, Film Formation and Surface Temperatures on a Cam in an Automotive Engine,” *Tribologia*, ISSN 0208-7774, June 2007.

9. Leedy, B., Putney, J., Bauman, C., Cacciola, S., Webster, J. M., Reinholtz, C. F., “Virginia Tech’s Twin Contenders: A Comparative Study of Reactive and Deliberative Navigation,” *Journal of Field Robotics*, 23(9), 709-727, September 2006.

10. Gombar, B., Terwelp, C., Fleming, M., Wicks, A. L. and Reinholtz, C.F., “JOUSTER: Joint Unmanned Systems Test, Experimentation and Research Facility,” *International Test and Evaluation (ITEA) Journal*, December 2004/January 2005, pp. 9-13.

11. Stephen L. Canfield, R. Randall Soper, Charles F. Reinholtz, “Creating Highly Dexterous Manipulators Using Nonlinear Input Transmission,” *ASME Journal of Mechanical Design*, Vol. 120, 1999.

12. Canfield, S. L., Soper, R. R., and Reinholtz, C. F., “Velocity Analysis of Parallel Manipulators by Truss Transformations,” *Mechanism and Machine Theory*, No. 34, 1999, pp. 345 – 357.

13. Roman, Chris and Reinholtz, C. F., “Robust Course-Boundary Extraction Algorithms for Autonomous Vehicles”, *IEEE Intelligent Systems*, Nov./Dec. 1998, pp.32-39.

14. Lee, H. Y., and C. F. Reinholtz, "Inverse Kinematics of Serial-Chain Manipulators," *ASME Journal of Mechanical Design*, Vol. 118, No. 3, September 1996, pp. 396 - 404.

15. Lee, H. Y., Fallon, J. B., Cordle, W. H., and Reinholtz, C. F., "Inverse Kinematic Analysis of a Mobile Underwater Inspection Robot,” Journal *of Applied Mechanisms and Robotics*, Vol. 2, No. 3, July 1995.

16. Canfield, S. L. and Reinholtz, C. F., "Development of an All-Revolute-Jointed Constant-Velocity Coupling," *Journal of Applied Mechanisms and Robotics*, Vol. 2, No. 3, July 1995, pp.13-19.

17. Shooter, S. B., West, R. L. and Reinholtz, C. F., A Unified Approach to Teaching Analytical Cam Design Using Conjugate Geometry, *The International Journal of Mechanical Engineering Education*, Vol. 23, No. 2, April 1995, pp 145-156.

18. Tidwell, P. H., Bandukwala, N., Dhande, S. G., Reinholtz, C. F. and Webb, G, "Synthesis of Wrapping Cams," *Journal of Mechanical Design*, Transactions of the ASME, Vol.116, No. 2, June 1994 (revised version of 1992 ASME conference publication.)

19. Voruganti, R. S., Dhande, S. G., and Reinholtz, C. F., "Symbolic and Computational Method for Design and Flat-Pattern Development of Bifurcation, Trifurcation- Type Transition Surfaces," *Transactions of the North American Manufacturing Research Institution of SME*, Volume XXII, pp 225-232, 1994.

20. Tidwell, P. H., Glass, S. W., Hildebrand, J. J., Reinholtz, C. F., and Shooter, S. B., "COBRA - Design and Development of a Manipulator for Nuclear Steam Generator Maintenance," *Journal of Applied Mechanisms and Robotics*, Vol. 2, No. 2, April 1994.

21. Padmanabhan, B., V. Arun, and C. F. Reinholtz, "Closed-Form Inverse Kinematic Analysis of Variable Geometry Truss Manipulators," *Journal of Mechanical Design*, ASME Transactions, Vol. 114, No. 3, September 1992, pp. 438-443.

22. Arun, V., C. F. Reinholtz, and L. T. Watson, "Application of New Homotopy Techniques to Variable Geometry Trusses," *Journal of Mechanical Design*, ASME Transactions, Vol. 114, No. 3, September 1992, pp. 422-427.

23. Voruganti, R. S., Dhande, S. G., and Reinholtz, C. F., "Symbolic and Computational Conjugate Geometry for the Manufacture of Helically Swept Surfaces," *Transactions of the North American Manufacturing Research Institution of SME*, Volume XX, pp 277-282, 1992.

24. Salerno, R. J., Reinholtz, C. F., and Dhande, S. G., "Kinematics of Long-Chain Variable Geometry Truss Manipulators," *Advances in Robot Kinematics*, pp. 179-187, Edited by S. Stifter and J. Lenarcic, Springer-Verlag Wien, New York, 1991.

25. Kosmatka, J. B., R. F. Fries, and C. F. Reinholtz," Tension and Bending Stress Concentration Factors in U, V, and Opposed U-V Notches," *The Journal of Strain Analysis for Engineering Design*, Vol. 25, No. 4, 1990, 233-240.

26. Rogers, C. A., H. H. Mabie, and C. F. Reinholtz, "Design of Spur Gears Generated with Pinion Cutters," *Mechanism and Machine Theory*, Vol. 25, No. 6, 1990, pp. 623-634.

27. Mabie, H. H., C. A. Rogers, and C. F. Reinholtz, "Design of Spur Gears Cut by a Hob," *Mechanism and Machine Theory*, Vol. 25, No. 6, 1990, pp. 635-644.

28. Williams, II, R. L., and C. F. Reinholtz, "Proof of Grashof's Law Using Polynomial Discriminants," *Journal of Mechanisms, Transmissions and Automation in Design*, ASME Transactions, Vol. 109, No. 2, June 1987, pp. 178-182.

29. Reinholtz, C. F., G. N. Sandor, and J. Duffy, "Branching Analysis of Spherical RRRR and Spatial RCCC Mechanisms," *Journal of Mechanisms, Transmissions and Automation in Design*, ASME Transactions, Vol. 108, No. 4, Dec. 1986, pp. 481-486.

30. Williams, II, R. L., and C. F. Reinholtz, "Mechanism Link Rotatability and Limit Position Analysis Using Polynomial Discriminants," *Journal of Mechanisms, Transmissions and Automation in Design*, ASME Transactions, Vol. 108, No. 4, Dec. 1986, pp. 562-564.

31. Myklebust, A., M. J. Keil and C. F. Reinholtz, "MECSYN-IMP-ANIMEC: Foundation for a New Computer-Aided Spatial Mechanism Design System," *Mechanism and Machine Theory*, Vol. 20, No. 4, 1985, pp. 257-269.

32. Reinholtz, C. F., S. G. Dhande, and G. N. Sandor, "Kinematic Analysis of Planar Higher-Pair Mechanisms," *Mechanism and Machine Theory*, Vol. 13, No. 6, 1978, pp. 619-629.

Notes, Review Articles, and Shorter Communications in Major Technical Journals

1. Fallon, J. B., and C. F. Reinholtz, "Simple Machine," short article published in the 1993 Edition of Academic American Encyclopedia, Deluxe Library Edition, Grolier, Inc., Vol. S, p. 316. Also published in the 1994 New Grolier Multimedia Encyclopedia, CD ROM Edition.

2. Fallon, J. B., and C. F. Reinholtz, "Machine," article published in the 1993 Edition of Academic American Encyclopedia, Deluxe Library Edition, Grolier, Inc., Vol. M, pp. 19-21. Also published in the 1994 New Grolier Multimedia Encyclopedia, CD ROM Edition.

3. Sandor, G. N., S. G. Dhande, and C. F. Reinholtz, discussion of "Reduction of Noise and Vibration in Roller Chain Drives," by S. W. Nicol and J. N. Fawcett, *Proceedings of the Institution of Mechanical Engineers*, Vol. 191 39/77, 1978.

4. Sandor, G. N., S. G. Dhande, and C. F. Reinholtz, discussion of "The Influence of Lubrication on Tooth-Roller Impacts in Chain Drives," by J. N. Fawcett and S. W. Nicol, *Proceedings of the Institution of Mechanical Engineers*, Vol. 191 21/77, 1978.

5. Reinholtz, C. F., review of the book Mechanics and Design of Cam Mechanisms, Pergamon Press, authored by F. Y. Chen, review published simultaneously in *Mechanism and Machine Theory*, Vol. 24, No. 4, 1985, and in *Shock and Vibration Digest*, Vol. 17, No. 12, 1985.

Books and Book Chapters

Mabie, H. H., and C. F. Reinholtz, Mechanisms and Dynamics of Machinery, 4th edition, with Solutions Manual, John Wiley and Sons, New York, 1987.

Teaching Excellence at a Research-Centered University, Edited by E. Scott Geller and Phil Lehman, Pearson Custom Publishing, Chapter 30: BRINGING THE BEST OUT OF STUDENTS: Teaching beyond the Classroom, 2006

Proceedings and Textbooks Edited

1. "Robotics, Spatial Mechanisms, and Mechanical Systems," Proceedings of the 22nd ASME Mechanisms Conference, DE-Vol. 45, September 1992, 644 Pages, Edited by G. Kinzel, C. Reinholtz, H. Lipkin, L. W. Tsai, G. R. Pennock and R. J Cipra.
2. "Mechanism Design and Synthesis," Proceedings of the 22nd ASME Mechanisms Conference, DE-Vol. 46, September 1992, 672 Pages, Edited by G. Kinzel, C. Reinholtz, G. R. Pennock, G. J. Wiens, R. J. Cipra, B. B. Thompson and T. R. Chase.
3. "Flexible Mechanisms, Dynamics, and Analysis," Proceedings of the 22nd ASME Mechanisms Conference, DE-Vol. 47, September 1992, 662 Pages, Edited by G. Kinzel, C. Reinholtz, H. Lipkin, L. W. Tsai, G. R. Pennock, R. J Cipra and B. B. Thompson.
4. Sandor, G. N., C. F. Reinholtz, and K. Soldner, errata to the book, *Mechanics and Design of Cam Mechanisms*, authored by F. Y. Chen, Pergamon Press, Inc., Elmsford, N.Y., 1982, 10 pages.

Conference Publications

1. Casey Troxler, Patrick Currier, Charles Reinholtz, "Impact of Automated Lane Change Assist on Energy Consumption," SAE Technical Paper 2020/4/14.
2. Gudmundsson, Snorri, Vladimir Golubev, Sergey Drakunov, Charles Reinholtz, "Bio-Inspired Opportunistic Approaches in Energy-Conserving/Harnessing Flight-Path Modeling for UAS," AIAA Modeling and Simulation Technologies Conference, AIAA Aviation and Aeronautics Forum and Exposition 2016.
3. Christopher Hockley, Timothy Zuercher, Christopher Kennedy, Gene Gamble, Hitesh Patel, Patrick Currier, Eric Coyle, Charles Reinholtz, "System Architecture, Development and Results of the Embry-Riddle Aeronautical University Maritime RobotX Platform," Control ID#: 2028351, Session: UMS-02, Unmanned Systems: Technologies and Applications, AIAA Science and Technology Forum 2015.
4. Jesse Farmer and Charles Reinholtz, "Kinematic Analysis and Design of a Two-Body Articulated Robotic Vehicle," Proceedings of ASME 2009 International Mechanical Engineering Congress & Exposition, November 13-19, 2009, Lake Buena Vista, Florida, USA
5. Gerald R. Lane, Charles Reinholtz, Mohan Khrishnan, Mark J. Paulik, Nassif Rayess, "Articulated Unmanned Ground Vehicles (UGVs) Controlled with Complimentary Semi- & Autonomous Mobility Behaviors," NATO symposium on "Platform Innovations and System Integration for Unmanned Air, Land and Sea Vehicles", Florence, Italy," May 14-18, 2007.
6. Brett M. Leedy and Charles Reinholtz, "Developing a Fully Autonomous Vehicle for

Virginia Tech's Entry in the DARPA Grand Challenge," National Instruments NI Week 2006, Austin Texas, (winner, Virtual Instrumentation Applications Paper Contest Best Control Paper Award).

7. Sean Baity, Charles F. Reinholtz and Alfred L. Wicks, "Kinematic Design of a Novel All-wheel Drive Multi-Body Articulated Unmanned Ground Vehicle," AUVSI Unmanned Systems North America 2006.
8. Grant Gothing, Jesse Hurdus, Al Wicks and Charles Reinholtz, "Implementation of JAUS on a 2004 Cadillac SRX Using a Potential Fields Architecture", AUVSI Unmanned Systems North America 2006.
9. Benjamin Dingus, Elizabeth Hoppe, Jansen Lee, Nicholas Misyak, David Pape, Justin Ryan, Matthew Schivikas, Steven Ross Shake, Christopher Veraa, Rachael Ramirez, Charles Reinholtz, "Development of a Fixed-Wing Autonomous Aerial Vehicle at Virginia Tech," AUVSI UAV Competition Journal Paper, http://www.bowheadsupport.com/paxweb/seafarers/default.htm, June, 2006.
10. Ruél Faruque, Andrew Bacha, Charles Reinholtz, "Implementing a JAUS Design Process on Two Autonomous Robots for the Intelligent Ground Vehicle Competition," 6th Annual Intelligent Vehicle Systems Symposium, Grand Traverse Resort & Spa-Traverse City, MI, June 2006.
11. Sean Baity, Jonathan Frentzel, Brett Gombar, Michael Fleming, Chris Terwelp, Al Wicks, Charles Reinholtz and Andrew Bacha, "Portable Wireless Site Instrumentation for Unmanned System Experimentation" AUVSI Unmanned Systems North America 2005, June 28-30, 2005, Baltimore, MD
12. Shane Barnett, Sean Baity, Ben Hastings, Chris Terwelp, Charles Reinholtz, Bill McBride, Andrew Moore, Development of a Tow Capacity Test Device for Small Unmanned Vehicles, AUVSI Unmanned Systems North America 2005, June 28-30, 2005, Baltimore, MD
13. Gregg Vonder Reith, Ken Meidenbauer, Imraan Faruque, Chris Sharkey, Jared Cooper, Shane Barnett, Charles Reinholtz, "Development of an Autonomous Aerial Reconnaissance Platform at Virginia Tech," AUVSI UAV Competition Journal Paper, http://www.bowheadsupport.com/paxweb/seafarers/default.htm, June 14-18, 2005.
14. Andrew Bacha, Michael Fleming, Chris Terwelp, Charles Reinholtz and Al Wicks, "A Behavior Based Approach to Autonomous Lane Following," 5th Annual Intelligent Vehicle Systems Symposium, Grand Traverse Resort & Spa-Traverse City, MI, June 13-16, 2005
15. Sean Baity, Brett Gombar, Michael Fleming, Charles Reinholtz, "Design for the Intelligent Ground Vehicle Competition," 5th Annual Intelligent Vehicle Systems Symposium, Grand Traverse Resort & Spa-Traverse City, MI, June 13-16, 2005
16. Whittier, W. B., Reinholtz C. F., and Stubbs, M. D., "Single Degree-of-Freedom Morphing Wing: Design and Synthesis,", Proceedings of the ASME Design Engineering Technical Conference and Computers and Information in Engineering Conference, September 28-October 2, 2004, Salt Lake City, Utah, DETC2004-57019
17. L. D. Wiggins, Stubbs, M. D., Johnston, C. O., Robertshaw, H. H., Reinholtz, C. F., and Inman, D. J., "Design and Analysis of a Morphing Hyper-Elliptic Cambered Span (HECS) Wing," American Institute of Aeronautics and Astronautics Structural Dynamics & Materials Conference, Palm Springs, California, 19-22 April, 2004
18. Wicks, A. L., Fleming, M., Terwelp C. and Reinholtz, C. F., "Development of a Remote-Controlled CASE CX-160 Excavator Using FieldPoint," National Instruments NI Week 2002, Austin Texas, Aug 12-15, 2002. (winner of the Best Application of Measurement and Automation Award)
19. Kedrowski, P. R., Conner, D. C., Reinholtz, C. F., Global Map Building and Look-Ahead

Implementation on an Outdoor Autonomous Vehicle, Proceedings of the SPIE Photonics Conference, Symposium on Intelligent Systems for Advanced Manufacturing, Vol. 4573, number16, 29-30 October 2001, Boston, MA

20. Kedrowski, P. R., Conner, D. C., Reinholtz, C. F., Optimized Parametric Calibration of Autonomous Vehicles, Proceedings of the SPIE Photonics Conference, Symposium on Intelligent Systems for Advanced Manufacturing, Vol. 4573, number 18, 29-30 October 2001, Boston, MA

21. Kedrowski, P. R., Reinholtz, C. F., Abbott, M. S., Conner, D. C., Biplanar bicycle as a base vehicle for Autonomous applications. SPIE Mobile Robots XV, 2000, Boston, MA.

22. Conner, D. C., Kedrowski, P. R., Reinholtz, C. F., Bay, J.S., Improved dead reckoning using caster wheel sensing on a differentially steered 3-wheeled autonomous vehicle. SPIE Mobile Robots XV, 2000, Boston, MA.

23. Conner, D. C., Kedrowski, P. R., Reinholtz, C. F., Multiple camera, laser rangefinder, and encoder data fusion for navigation of a differentially steered 3-wheeled autonomous vehicle. SPIE Mobile Robots XV, 2000, Boston, MA.

24. Soper, R. R., Anderson, J. M., Jacobs, D. C., James, M. M., Reinholtz, C. F., "Analytical Synthesis of Cams Conjugate to Elliptical Followers," *Proceedings of the 6th National Applied Mechanisms and Robotics Conference*, Cincinnati, OH, December 13-15, 1999.

25. Abbott, M. S., Carr, A., Soper, R. R., Reinholtz, C. F., "Hamiltonian Dynamics and Numerical Optimization of the Trebuchet," *Proceedings of the 6th National Applied Mechanisms and Robotics Conference*, Cincinnati, OH, December 13-15, 1999.

26. Soper, R. R., Abbott, M. S., Reinholtz, C. F., "Coupled Camera Stabilization and Propulsion Mechanism and Control Law Development for an Autonomous Biplanar Bicycle," *Proceedings of the 6th National Applied Mechanisms and Robotics Conference*, Cincinnati, OH, December 13-15, 1999.

27. Coleman, P. K., Mayhew, D. M, Bay, J. S., Reinholtz, C. F., "Enhancing Engineering Education using an Interdisciplinary Team-Oriented Approach to Autonomous Robot Design," ASEE Annual Conference and Exposition, Charlotte NC, June 20-23, 1999.

28. Reinholtz, C. F., Bay, J., Soper, R. R., Abbott, M., and Grove, D., 1999, "The Biplanar Bicycle," Proceedings of the 1999 ASME International Mechanical Engineering Congress and Exposition, Nashville, TN, Nov. 14-19, *Innovations in Vehicle Design and Development*, DE-Vol.101, pp.157-160.

29. Abbott, M. S., Soper, R. R., Grove, D. E., and Reinholtz, C. F., 1999, "Planar Dynamics and Control of a Two-Wheeled Single-Axle Vehicle," Proceedings of the 1999 ASME International Mechanical Engineering Congress and Exposition, Nashville, TN, Nov. 14-19, *Innovations in Vehicle Design and Development*, DE-Vol.101, pp.161-169.

30. Grove, D. E., Soper, R. R., Abbott, M. S., and Reinholtz, C. F., 1999, "Orientation-Regulated Platforms for Use on Biplanar Bicycles," Proceedings of the 1999 ASME International Mechanical Engineering Congress and Exposition, Nashville, TN, Nov. 14-19, *Innovations in Vehicle Design and Development*, DE-Vol.101, pp.171-177.

31. Soper, R. R., Reinholtz, C. F., Canfield, S. L., and Williams, R. L. III, 1999, "Contention-Free Control of Over-Constrained Variable Geometry Trusses," Proceedings of the 1999 ASME Design Engineering Technical Conferences, 25th Design Automation Conference, Las Vegas, NV, Sept. 12-15, ASME Paper No. DETC99/DAC-8668.

32. Bay, J., Saunders, W., Reinholtz, C. F., Pickett, P., Johnston, L., "Mechatronics Education at Virginia Tech," *SPIE International Symposium on Intelligent Systems and Advanced Manufacturing*, Nov. 1998.

33. R. Randall Soper, Charles F. Reinholtz, Stephen L. Canfield, "Synthesis of Multi-Degree-of-Freedom Force Generating Linkages," *Proceedings of the ASME Design Engineering Technical Conferences*, Atlanta, Georgia, September 1998, CD ROM Proceedings, paper DETC98/MECH-5975

34. Stephen L. Canfield, R. Randall Soper, Charles F. Reinholtz, "Creating Highly Dexterous Manipulators Using Nonlinear Input Transmission," *Proceedings of the ASME Design Engineering Technical Conferences*, Atlanta, Georgia, September 1998, CD ROM Proceedings, paper DETC98/MECH-59756

35. Burgiss, M. J., Reinholtz, C.F, and Bay, J., "Education and Research Experience of the Autonomous Vehicle Team at Virginia Tech," *SPIE Conference on Intelligent Systems and Automated Manufacturing,* Pittsburgh, PA, Oct. 1997, pp. 295-305.

36. Soper, R. R., Reinholtz, C. F., Gao, D., Canfield, S. L., "The Mathematics of Manipulator Statics: Minimum Principles, Duality, and Underlying Linear Symmetry," *Proceedings of the 5th National Applied Mechanisms and Robotics Conference*, Cincinnati, OH, October 12-15, 1997

37. Soper, R. R., Reinholtz, C. F., and Scardina, M. T., "Synthesis of Linkage-Based Selectorized Weight Machines," *Proceedings of the 5th National Applied Mechanisms and Robotics Conference*, Cincinnati, OH, October 12-15, 1997

38. Soper, R. R., Reinholtz, C. F., and Canfield, "Maximum Number of Precision Positions in Nonclassical Linkage Synthesis," *Proceedings of the 5th National Applied Mechanisms and Robotics Conference*, Cincinnati, OH, October 12-15, 1997.

39. Coombs, D. J., Canfield, S. L., Soper, R. R., and Reinholtz, C. F., "Design of User-Weight-Based Exercise Machines," *Proceedings of the 5th National Applied Mechanisms and Robotics Conference*, Cincinnati, OH, October 12-15, 1997

40. Canfield, S. L., Soper, R. R., and Reinholtz, C. F., 1997, "Dynamic Force Analysis of the Carpal Wrist," *Proceedings of the 1997 ASME Design Engineering Technical Conferences* (CD-ROM), Design Automation Conference, Sacramento, CA, September 15-20, 97-DETC/DAC-3970, 1997.

41. Canfield, S. L., Soper, R. R., and Reinholtz, C. F., "Uniformity as the Guide to Evaluation of Dexterous Manipulator Workspaces," *Proceedings of the 1997 ASME Design Engineering Technical Conferences* (CD-ROM), Design Automation Conference, Sacramento, CA, September 15-20, 97-DETC/DAC-3969, 1997

42. Shooter, S.B. and C.F. Reinholtz, "AutoCam - A Modular Decision Support System for the Design of Cam Mechanisms", Proceedings of the 1997 ASME Design Automation Conference, Sacramento California, September 1997. September 15-20, 97-DETC/DAC.

43. Soper, R. R., Canfield, S. L., Reinholtz, C. F., and Mook, D. T., "New Matrix-Theory-Based Definitions for Manipulator Dexterity," *Proceedings of the 1997 ASME Design Engineering Technical Conferences* (CD-ROM), Design Automation Conference, Sacramento, CA, September 15-20, 97-DETC/DAC-4410, 1997.

44. Soper, R. R., Mook, D. T., and Reinholtz, C. F., "Vibration of Nearly-Perfect Spring Equilibrators," *Proceedings of the 1997 ASME Design Engineering Technical Conferences* (CD-ROM), Design Automation Conference, Sacramento, CA, September 15-20, 97-DETC/DAC-3768, 1997.

45. Canfield, S. L., Reinholtz, C. F., "Development of the Carpal Robotic Wrist'" Proceedings of the ISER97, June 15-18, 1997

46. Tidwell, P. H., Soper, R. R., and Reinholtz, C. F., "Synthesis of Force-Generating Mechanisms," *Proceedings of the 24th Biennial Mechanisms Conference*, Irvine, California, August 18-22, 1996, paper 96-DETC/MECH-1211.

47. Canfield, S. L., Soper, R. R., Hendricks, S. L., and Reinholtz, C. F., "Velocity Analysis of Truss-

Type Manipulators," *24th Biennial Mechanisms Conference*, Irvine, California, August 18-21, 1996, paper DETC/MECH-1158.

48. Canfield, S. L., Ganino, A. J., Salerno, R. J., and Reinholtz, C. F., 1996, "Singularity and Dexterity Analysis of the Carpal Wrist," *24th Biennial Mechanisms Conference*, Irvine, California, August 18-21, 1996, paper DETC/MECH-1156.

49. Glass, S. W., Ranson, C. C., Reinholtz, C. F. and Calkins, J. M., "Modular Robotics Applications in Nuclear Power Plant Maintenance," *Proceedings of the 58th American Power Conference*, April 9-11, 1996.

50. Calkins, J. M., Canfield, S. L., Salerno, R. J. and Reinholtz, C. F., "An Optimization-Based, Matrix Operator Approach to Real-Time Compensation of Static Deflections in Robotic Manipulators," Proceedings of the 4th National Applied Mechanisms and Robotics Conference, December 10-14, 1995, Cincinnati, Ohio, Paper AMR 95-019.

51. Canfield, S. L., Voruganti, R.S. and Reinholtz, C. F., "Minimizing Pose Errors in Robotic Systems Through Calibration," Proceedings of the 4th National Applied Mechanisms and Robotics Conference, December 10-14, 1995, Cincinnati, Ohio, Paper AMR 95-017.

52. Scardina, M.T., Soper, R. R., Calkins, J. M. and Reinholtz, C. F., "Optimal Synthesis of Force-Generating Planar Four-Link Mechanisms," Proceedings of the 4th National Applied Mechanisms and Robotics Conference, December 10-14, 1995, Cincinnati, Ohio, Paper AMR 95-003.

53. Canfield, S. L., Salerno, R. J. and Reinholtz, C. F., "Design of an All-Revolute, Constant-Velocity Coupling," SAE International Off-Highway & Powerplant Congress & Exposition, September 11-13, 1995, Milwaukee, Wisconsin, ISSN 0148-7191, Paper no. 952133.

54. Soper, R. R., Scardina, M., Tidwell, P., Reinholtz, C. F. and Lo Presti M. A., "Closed-Form Synthesis of Force-Generating Planar Four-Bar Linkages," DE-Vol. 82, Advances in Design Automation, Proceedings of the 1995 ASME Design Technical Conferences, Boston, MA, September 17-21, 1995, pp. 845-851.

55. Salerno, R. J., Canfield, S. L., Ganino, A. J. and Reinholtz, C. F., "A Parallel, Four-Degree-of -Freedom Robotic Wrist," DE-Vol. 82, Advances in Design Automation, Proceedings of the 1995 ASME Design Technical Conferences, Boston, MA, September 17-21, 1995, pp. 765-771.

56. Glass, S. W, Fallon, J. B., Reinholtz, C. F., Abbott, A. L. "Machine Vision Calibration for a Nuclear Steam Generator Robot," Proceedings of the 1994 ANS Winter Annual Meeting, Washington D.C, November 1994.

57. Fallon, J. B., Shooter, S. B., Reinholtz, C. F. and Glass, S. W.,"URSULA: Design of an Underwater Robot for Nuclear Reactor Vessel Inspection," Proceedings of the ASCE Specialty Conference, Albuquerque, NM, Feb. 26 to March 3, 1994, pp. 311-319.

58. Canfield, S. L., Salerno, R. J., and Reinholtz, C. F. , "Kinematic Design of a Large-Angular-Motion Constant-Velocity Coupling," DE-Vol.70, Mechanism Synthesis and Analysis, Proceedings of the 1994 ASME Design Technical Conferences, Minneapolis, MN, Sept. 11-14, 1994, pp. 167-174.

59. Shooter, S. B., Tidwell, P, H. and Reinholtz, C. F., "Analytical Approach to Cam-Modulated Linkage Synthesis Using Conjugate Geometry, " Mechanism Synthesis and Analysis, Proceedings of the 1994 ASME Design Technical Conferences, Minneapolis, MN, Sept. 11-14, 1994, pp. 167-174.

60. Salerno, R. J. and Reinholtz, C. F., "A Modular, Long-Reach Truss-Type Manipulator for Waste Storage Tank Remediation," DE-Vol.70, Mechanism Synthesis and Analysis, Proceedings of the 1994 ASME Design Technical Conferences, Minneapolis, MN, Sept. 11-14, 1994, pp. 167-174.

61. Fallon, J. B., Reinholtz, C. F., Vallance, R. R., and Voruganti, R. S., "Improving Robot System Performance Using Computer Vision," Mechanism Synthesis and Analysis, Proceedings of the 1994 ASME Design Technical Conferences, Minneapolis, MN, Sept. 11-14, 1994, pp. 167-174.

62. Garg, A. K., Reinholtz, C. F., Kornhauser, A. A., Voruganti, R. S., Douglass, C. H. and Walker, T. E., "Design and Development of a Bioremediation-Based System for Treating Medical Waste," Proceedings of the 26th Mid-Atlantic Industrial Waste Conference, Aug, 7-10, 1994, pp.53-60.

63. Glass, S. W, Fallon, J. B., Reinholtz, C. F., Abbott, A. L. and Asher, J. D. "Machine Vision Independent Position Verification for a Nuclear Steam Generator Robot," Proceedings of the 1994 EPRI Conference, Washington D.C, November 1994.

64. Canfield, S. L. and Reinholtz, C. F., "Development of and All-Revolute-Jointed Constant-Velocity Coupling, Proceedings of the 3rd National Applied Mechanisms and Robotics Conference, November 7-10, 1993, Cincinnati, Ohio, Paper AMR 93-081.

65. Tidwell, P. H., Hendricks, M. W., Fallon, J. B., Stulce, J. R., Beisgen, L. C. V., Reinholtz, C. F., and Maples, A. B., "Acoustic Pose Determination Applied to an Underwater Mobile Robot," Proceedings of the 3rd National Applied Mechanisms and Robotics Conference, November 7-10, 1993, Cincinnati, Ohio, Paper AMR 93-084.

66. Lee, H. Y., Fallon, J. B., Cordle, W. H., and Reinholtz, C. F., "Inverse Kinematic Analysis of a Mobile Underwater Inspection Robot," Proceedings of the 3rd National Applied Mechanisms and Robotics Conference, November 7-10, 1993, Cincinnati, Ohio, Paper AMR 93-085.

67. Shooter, S. B. and Reinholtz, C. F., "Extrinsic Calibration of Portable Manipulators," Proceedings of the 22nd ASME Mechanisms Conference, DE-VOL 45, September 1992, pp. 501-506.

68. Shooter, S. B., Reinholtz, C. F. and Dhande, S. G., "On the Kinematic Design of Manipulators for Limited Access Workspaces (LAWS)," Proceedings of the 22nd ASME Mechanisms Conference, DE-VOL 45, September 1992, pp. 485-491.

69. Tidwell, P. H., Bandukwala, N., Dhande, S. G., Reinholtz, C. F. and Webb, G, "Synthesis of Wrapping Cams," Proceedings of the 22nd ASME Mechanisms Conference, DE-VOL 46, September 1992, pp. 337-343. (Procter and Gamble Best Paper Award of Merit, 22nd ASME Mechanisms Conference, Scottsdale, Arizona, September 1992)

70. Padmanabhan, B., Tidwell, Salerno, R. J. and Reinholtz, C. F., "VGT-Based Gimbals: Practical Construction and General Theory," Proceedings of the 22nd ASME Mechanisms Conference, DE-VOL 47, September 1992, pp. 437-443.

71. Arun, V., Padmanabhan, B., Kolady, K., and Reinholtz, C. F., "Determination of the workspace of the 3-DOF Double-Octahedral Variable-Geometry Truss Manipulator," Proceedings of the 22nd ASME Mechanisms Conference, DE-VOL 45, September 1992, pp. 493-500.

72. Tidwell, P. H., Glass, S. W., Hildebrand, J. J., Reinholtz, C. F., and Shooter, S. B., "COBRA - Design and Development of a Manipulator for Nuclear Steam Generator Maintenance," Proceedings of the 2nd National Applied Mechanisms and Robotics Conference, November 3-6, 1991, Cincinnati, Ohio, (Winner of Proctor and Gamble Best Paper Award and Winner of The George Wood Best Applied Paper Award).

73. Stulce, J. R., and Reinholtz, C. F., "Observations on Caterpillar Locomotion and Their Application to a Crawling Robot," Proceedings of the 2nd National Applied Mechanisms and Robotics Conference, November 3-6, 1991, Cincinnati, Ohio.

74. Stulce, J. R., W. D. Burgos, S. G. Dhande, and C. F. Reinholtz, "Conceptual Design of a Multibody Passive-Legged Crawling Vehicle," Proceedings of the 1990 ASME Mechanisms Conference, DE-Vol. 26, Cams, Gears Robot and Mechanism Design, Sept. 16-19, 1990, pp. 199-205.

75. Arun, V., and C. F. Reinholtz, L. T. Watson, "Enumeration and Analysis of Variable Geometry Truss Manipulators," Proceedings of the 1990 ASME Mechanisms Conference, DE-Vol. 26, Cams, Gears Robot and Mechanism Design, Chicago, IL, Sept. 16-19, 1990, pp. 93-98.

76. Dhande, S. G., B. Padmanabhan, C. F. Reinholtz, and R. S. Voruganti, "Computer-Aided Design and Manufacture of Approximate Ruled Surfaces," Proceedings of the Second International Conference on Computer Integrated Manufacturing, IEEE Computer Society Press, Troy, NY, May 21-23, 1990, pp. 137-142.

77. Tidwell, P. H., C. F. Reinholtz, H. H. Robertshaw, C. G. Horner, "Kinematic Analysis of Generalized Adaptive Trusses," First Joint US/Japan Conference on Adaptive Structures, Maui, Hawaii, November 13-15, 1990.

78. Padmanabhan, B., and C. F. Reinholtz, "Design of Robotic Manipulators Using Variable-Geometry Trusses as Joints," paper 89 AMR-8C-7, Proceedings of the First National Applied Mechanisms and Robotics Conference, Vol. II, 1989.

79. Thompson, J. M., C. F. Reinholtz, and A. Myklebust, "Exact Analysis and Synthesis of the RSCR Spatial Mechanism," ASME paper No. 88131, Trends and Developments in Mechanisms, Machines and Robotics--1988 Proceedings of the 20th Mechanisms Conference, Orlando, FL, Sept. 25-28, 1988.

80. Williams, R. L., II, C. F. Reinholtz, "Forward Dynamic Analysis and Power Requirement Comparison of Parallel Robotic Mechanisms," ASME paper No. 88078, Trends and Developments in Mechanisms, Machines and Robotics--1988 Proceedings of the 20th Mechanisms Conference, Orlando, FL, Sept. 25-28, 1988. (Also accepted for publication in the ASME Journal of Mechanisms, Transmissions and Automation in Design, 1989.)

81. Williams, R. L., II, C. F. Reinholtz, "Closed-Form Workspace Determination and Optimization for Parallel Robotic Mechanisms," ASME paper No. 88079, Trends and Developments in Mechanisms, Machines and Robotics--1988 Proceedings of the 20th Mechanisms Conference, Orlando, FL, Sept. 25-28, 1988.

82. Robertshaw, H. H., and C. F. Reinholtz, "Variable Geometry Trusses," Proceedings of the US Army Research Office Workshop on Smart Materials, Structures and Mathematical Issues, Sept. 15-16, 1988.

83. Salerno, R. J., C. F. Reinholtz, and H. H. Robertshaw, "Shape Control of High Degree of Freedom Variable Geometry Trusses," presented at the NASA Workshop on Controls/Structures Integration, Williamsburg, VA, July 11-13, 1988.

84. Williams, R. L., II, C. F. Reinholtz, "Closed-Loop Planar Manipulators: Part I - Forward and Inverse Kinematics; Part 2 - Workspace Optimization," Proceedings of the 10th Applied Mechanisms Conference, Dec. 6-9, 1987, New Orleans, Louisiana.

85. Rogers, C. A., H. H. Mabie, and C. F. Reinholtz, "Numerical Determination of Accuracy Points Using Chebyshev Polynomials for Displacement and Velocity Synthesis," Proceedings of the 10th Applied Mechanisms Conference, Dec. 6-9, 1987, New Orleans, Louisiana.

86. Mabie, H. H., C. F. Reinholtz, and C. A. Rogers, "Determination of Hob Offsets to Maximize the Ratio of Recess to Approach Action and Balance Tooth Strengths for Nonstandard Spur Gears by Limit Analysis," Proceedings of the 10th Applied Mechanisms Conference, Dec. 6-9, 1987, New Orleans, Louisiana.

87. Mabie, H. H., C. F. Reinholtz, and C. A. Rogers, "Determination of Pinion Cutter Offsets to Maximize Recess to Approach Action or to Equalize Tooth Strengths of Nonstandard Spur Gears with Backlash," Proceedings of the l0th Applied Mechanisms Conference, Dec. 6-9, 1987, New Orleans, Louisiana.

88. Reinholtz, C. F., and D. Gokhale, "Design and Analysis of Variable Geometry Truss Robots," Proceedings of the 10th Applied Mechanisms Conference, Dec. 6-9, 1987, New Orleans, Louisiana.

89. Reinholtz, C. F., V. Arun, and R. L. Williams, A Reassessment of the Tasks of Kinematic Synthesis," Proceedings of the 10th Applied Mechanisms Conference, Dec. 6-9, 1987, New Orleans, Louisiana.

90. Arun, V., and C. F. Reinholtz, "Design of the RCCC Spatial Mechanism," Proceedings of the 10th Applied Mechanisms Conference, Dec. 6-9, 1987, New Orleans, Louisiana.

91. Klatt, M. A., and C. F. Reinholtz, "Mechanism Optimization Using Zero-Order Methods and Penalty Functions: A Comparison of Incremented Versus Nonincremented Penalty Parameter," DE-VOL. 10-1, Advances in Design Automation, Vol. 1, Proceedings of the 1987 Design Automation Conference, Boston, MA, Sept. 27-30, 1987, pp. 205-213.

92. Rogers, C. A., R. E. Cobb, and C. F. Reinholtz, "Incorporating Computer Programming Projects Into the Mechanical Engineering Curriculum," Proceedings of the Fifth National Conference on University Programs in Computer-Aided Engineering, Design, and Manufacturing (UPCAEDM '87), pp. 176-180.

93. Williams, II, R. L., C. F. Reinholtz, and A. Myklebust, "Complete Function-Generation Synthesis and Design of RSSR Spatial Mechanisms," ASME Paper 86-DET-151, presented at the 19th ASME Mechanisms Conference, Columbus, Ohio, October 1986.

94. Reinholtz, C. F., "Integrating Computers into Kinematics Courses at VPI&SU," Proceedings of the Fourth National Conference on University Programs in Computer-Aided Engineering, Design and Manufacture, August 1986, pp. 127-130.

95. Mabie, H. H., C. F. Reinholtz, D. Puzio, and G. M. Irwin, "Optimum Design of Spur Gear Teeth Cut with a Hob," Proceedings of the Ninth Applied Mechanisms Conference, Kansas City, MO, 1985, Vol. 2, Session VIII.B, Paper VI.

96. Keil, M. J., A. Myklebust, and C. F. Reinholtz, "Prediction of Link Interference in Planar Mechanisms," Proceedings of the Ninth Applied Mechanisms Conference, Kansas City, MO, 1985, Vol. 1, Session III.B, Paper V, (Winner of Proctor and Gamble Best Paper Award).

97. Myklebust, A., C. F. Reinholtz, W. H. Francis, and M. J. Keil, "Design of a Radar Guidance Mechanism Using MECSYN-ANIMEC," ASME Paper 84-DET-139, presented at the 18th ASME Mechanisms Conference, Cambridge, Massachusetts, October 10, 1984.

98. Sandor, G. N., A. G. Erdman, E. Raghavacharyulu, and C. F. Reinholtz, "On the Equivalence of Higher and Lower Pair Planar Mechanisms," Proceedings of the Sixth World Congress of the International Federation for the Theory of Machines and Mechanisms, New Delhi, India, 1983.

99. Sandor, G. N., D. Kohli, X. Zhuang, and C. F. Reinholtz," Synthesis of a Five-Link Spatial Motion Generator," ASME paper 82-DET-130, 1982.

100. Sandor, G. N., D. Kohli, A. Ghosal, and C. F. Reinholtz," Closed-Form Analytic Synthesis of a Five-Link Spatial Motion Generator," Proceedings of the Seventh Applied Mechanisms Conference, Kansas City, MO, 1981, pp. XXVI-1 to XXVI-7

Patents

1. "Spatial, Parallel-Architecture, Robotic Carpal Wrist," U. S. Patent 5,699,695, Inventors: Canfield, S. L., Reinholtz, C. F., Salerno, R. J., and Ganino, Anthony J., Assignee: Virginia Tech Intellectual Properties, Inc., Awarded December 23, 1997.

2. "Snubber Profile," U. S. Patent 4,998,942, Inventor: Reinholtz, Charles F. Assignee: Milliken Research Corporation, Spartanburg, S.C., Awarded March 12, 1991.

Invited Presentations at National Meetings

1. "Test Drive an Autonomous Vehicle: Experiences from the 2007 DARPA Urban Challenge," Presentation to USAA, 19 January 2009, San Antonio, TX
2. "Challenges and Opportunities Offered by the DARPA Grand Challenge," Invited Presentation and Panel Discussion at the 2004 AIAA Unmanned Aerial Vehicle Conference, Chicago, IL, September 2004.
3. "Product Safety and Product Liability," Invited Lecture at the 2001 ASME World Congress, New York, NY, Nov.13, 2001
4. "Life after Tenure'" Invited Speaker and Panelist at the ASEE Annual Conference and Exposition, Charlotte NC, June 20-23, 1999.
5. "Reduced Complexity Robotics," Invited presentation at the 1998 ASME Design Technical Conferences, 25th Biennial Mechanisms Conference, Atlanta, GA, September 1998.
6. "Trends and Opportunities in Mechanisms Research," Plenary Panel Session Speaker at the 4th National Applied Mechanisms and Robotics Conference, Cincinnati, Ohio, December 10-14, 1995.
7. "Trends and Opportunities in Robotics," Opening Plenary Session Lecture at the 10th Applied Mechanisms Conference, Dec. 6-9, 1987, New Orleans, Louisiana.
8. "Observations on Robotics and Mechanisms Research," Opening Plenary Panel Session Speaker at the 2nd National Applied Mechanisms and Robotics Conference, November 3-6, 1991, Cincinnati, Ohio, November 3-6, 1991.

University Service

Invited Speaker at the following University Events and Alumni Association Chapter Meetings:
June 23, 2005, Research Triangle Park Alumni Chapter, Raleigh, NC
March 18, 2004, Greensboro, NC Triad Alumni Chapter
March 31, 2004, Atlanta Alumni Chapter
November 1, 2004, Committee of 100 - Hotel Roanoke
November 21, 2004, Class of 1968, Donaldson Brown

Advisor to the following Embry Riddle Autonomous Vehicle Teams:
Unmanned Aerial Systems Competition, 2007-Present
International Aerial Robotics Competition, 2007-Present
Intelligent Ground Vehicle Competition, 2007-Present
RoboBoat, 2007-Present
RoboSub, 2007-Present
Maritime RobotX Competition,2013-Present
EcoCAR (CAVs Advisor), 2016-Present
Member, College Promotion and Tenure Committee 2018-21
Fulbright Scholarship Advisory Committee 2005
Advisor to the Virginia Tech Autonomous Aerial Vehicle Competition Team, 2004-
Advisor to the Virginia Tech DARPA Grand Challenge Team, 2003-
Virginia FIRST Lego League Coordinator, 2002-
Advisor to the Virginia Tech Intelligent Ground Vehicle Competition Team, 1995-
Advisor to Entering Honors Students 2003-
Horton Honors Scholarship Selection Committee 2003-
Member, University Strategic Planning Committee, 2001
Chair, Virginia Tech Academy of Teaching Excellence 2000-2001
Vice Chair, Virginia Tech Academy of Teaching Excellence 1999-2000

Member, University Promotion and Tenure Committee 2000-2001
Member, College Promotion and Tenure Committee 2000-2001
Chair, Mechanical Engineering Curriculum Committee 1997-2002
Chair, Mechanical Engineering ABET Review, 1998-2002
Member, College of Engineering Curriculum Committee 1997-2002
Member, 1st Year Special Curriculum Review Committee 1997
Member, Engineering Dean Search Committee, 1993-4
Chairman, Mechanical Engineering Honors and Awards and Publicity Committee, 1993-99
Member, Mechanical Engineering Honors and Awards and Publicity Committee, 1993-99
Chairman, College Wine Teaching Award Committee, 1992-95
Chairman, University Wine Teaching Award Committee, 1995-96
Member, Mechanical Engineering Department Head Search Committee, 1992-93
Member, Mechanical Engineering Curriculum Committee, 1984-87, 1992-2004
Member, Mechanical Engineering Tenure and Promotion Committee, 1989-2004
Member, Mechanical Engineering Graduate Committee, 1987-89
Member, Mechanical Engineering Recruiting Committee, 1992-93
Member, Sigma Xi High School Teaching Award Committee 1987-88, Chairman 1989
Member, College of Engineering Commencement Committee, 1988-
Faculty Advisor to the Virginia Tech Student Section of ANS, 1993-
Faculty Advisor to the Virginia Tech Student Section of ASME, 1988-
Faculty Advisor to the Virginia Tech Chapter of Tau Beta Pi, 1984-88
Host for the Virginia Tech Academic Challenge, 1991

Professional Service

Society	Positions Held
ASME	Secretary of the Virginia Section 1987-92 Chairman of the National Student Mechanism Competition 1987-88 Chairman of the Joint Regional Conference 1989 and 2000 Virginia Tech Student Section Advisor, 1988-2007 Member of the ASME Mechanisms Committee, 1990-1993 Associate Technical Editor, *ASME Journal of Mechanical Design*, 1991-93 Paper Review Chairman, 22nd ASME Mechanisms Conference, Sept. 1992 Conference Arrangements Chairman, 23rd ASME Mechanisms Conference, Sept. 1994 Member, ASME National Design Contest Committee, 1996-2002 Virginia Section Newsletter Editor, 1994-2000 Region IV Senior Representative to the National Student Sections Committee, 1995-2000
Sigma Xi	High School Teaching Award Committee, Member 1987-88, Chair 1989
ANS	Student Section Advisor, Virginia Tech, 1993-95
NAE	Invited review Board member, National Academies' National Research Council (NRC) Army Research Laboratory Technical Assessment Board (ARLTAB), May 2004

Graduate Advising

Master's Degree Students Completed				
	Degree	**Name**	**Completion Date**	**Title**
1	MS	Robert L Williams, II	8/85	Synthesis and Design of the RSSR Spatial Mechanism for Function Generation
2	MS	Arun Veeraraghavan	3/86	Computer Aided Design of the RCCC Spatial Mechanism
3	MS	Michael A. Klatt	10/86	Design Optimization of Planar Mechanisms
4	MS	Kevin K. Moyers	11/87	A Microcomputer-Based Data Acquisition System for Diagnostic Monitoring of High-Speed Electric Motors
5	MS	Christodoulos S. Demetriou	12/87	A PC Implemented Kinematic Synthesis System for Planar Mechanisms
6	MS	Dipen P. Gokhale	12/87	Kinematic Analysis and Animation of a Variable-Geometry Truss Robot
7	MS	William R. Seith	5/88	Design of a Flying Cutter
8	MS	George M. Clessas	5/88	Direct Calculation of Cable Tension in a Store Separation Program Which Models the Launch of an Aerial Tow Target
9	MS	Mark W. Biegler	8/88	Determination of Stress Concentration Factors Using Experimental Methods
10	MS	Nandan Joshi	2/88	Mobility Analysis of Variable-Geometry Trusses
11	MS	Vasant Marathe	12/88	Design of a Hot Melt Book Binding Machine
12	MS	Babu Padmanabhan	12/88	Design of a Robotic Manipulator Using Variable-Geometry Trusses as Joints
13	MS	Robert J. Salerno	6/89	Shape Control of High Degree-of-Freedom Variable-Geometry Truss Manipulators
14	MS	Ravinder S. Voruganti	8/90	Symbolic and Computational Conjugate Geometry for Design and Manufacturing Applications
15	MS	Steven B. Shooter	12/90	Conceptual Manipulator Design for Limited Access Workspaces
16	MS	Paul Mele	5/91	Mechanical Design of a Stewart Platform-Based Crawling Vehicle
17	M.S.	William K. Carpenter	12/92	Design of Medical Waste Treatment Systems Employing Bioremediation
18	MS	Allen Maples	5/93	Design of a Robust Acoustic Positioning System for an Underwater Nuclear Reactor Vessel Inspection Robot
19	MS	William Cordle	5/93	Numerical Inverse Kinematics for a Six Degree-of-Freedom Manipulator
20	MS	Glenn Melnyk	6/93	Mechanisms for Automated Toolhead Changing in Nuclear Steam Generator Robotics
21	MS	Steve Payne	5/94	A CAD-Interactive Software Package for the Synthesis of Planar Disk Cams
22	MS	Anil K. Garg	8/94	Design, Installation and Testing of a Bioremediation-Based System for Treating Regulated Medical Waste
23	MS	Todd Denkins	12/94	Design Methodology to reduce the Number of Actuators in Complex Mechanisms

BEATBOT EX1010
Beatbot v. Zodiac
Page 271

24	MS	Joseph Calkins	12/94	Real-Time Compensation of Static Deflections in Robotic Manipulators
25	MS	Randy Soper	8/95	Synthesis of Planar Four-Link Mechanisms for Force Generation
26	MS	Keith Garguilo	8/95	Design and Testing of a Nonlinear Mechanical Advantage Demonstration Mechanism
27	MS	Ganino, A. J.	5/96	Mechanical Design of the Carpal Wrist: A Parallel-Actuated, Singularity-Free Robotic Wrist
28	MS	Larkin, Susan	6/96	Wheeled Autonomous Mobile Robots for use in Harsh Environments: A Survey of Recent Publications
29	MS	Iskandar, Kurnia	6/96	Computer Assisted Synthesis of Wrapping Cam Mechanisms
30	MS	Riutort, Kevin	7/96	Applied Design and Implementation of Straight-Line Mechanisms
31	MS	Saccoccio, Greg	8/96	Error Modeling of the Carpal Wrist
32	MS	Scardina, Mike	10/96	Optimal Synthesis of Force-Generating Planar Four-Link Mechanisms
33	MS	Palmer, Matthew	12/96	Kinematics of Beam-Flexure Four-Bar Linkages with Applications in a Compound Bow
34	MS	Coombs, Dana	2/97	Design of User-Weight-Based Exercise Machines
35	MS	Doyle, Matthew	12/97	The Foundation for CADSPAM
36	MS	Hayes, Thomas J.	12/97	The Creative Entrepreneurs Organization
37	MS	Adler, Alex	5/98	Testing and Understanding Screwdriver Bit Wear
38	MS	Haynie, C. Dean	8/98	Mechanical Design and Navigation Strategies for a Zero-Turn-Radius Autonomous Vehicle
39	MS	Holland, Michael	12/98	Assembly Optimization for Double-Row Ball Bearings
40	MS	Abbott, Michael	6/00	Dynamics and Control of the Biplanar Bicycle
41	MS	Conner, David	8/00	Sensor Fusion, Navigation, and Control of Autonomous Vehicles
42	MS	Jillcha Wakjira	1/01	Design of a SMA Heat Engine
43	MS	Carr, Angela	5/01	Position Control Comparison of Equilibrated and Mass Counterweight Systems
44	MS	Kedrowski, Philip	5/01	Development and Implementation of a Self-Building Global Map for Autonomous Navigation
45	MS	Blackett, Ricardo	5/01	Optimization of Multi-Degree-of-Freedom Force Generating Mechanisms
46	MS	Matthew Thompson	7/01	Design of a Cyclic Sliding, Dynamically Loaded Wear Testing Device for the Evaluation of Total Knee Replacement Materials
47	MS	Rundgren, Brian	12/01	Design and Optimization of Force Generation Linkages to Include Dynamic Effects
48	MS	Schiller, Ean	9/02	Heat Engine Driven by Shape Memory Alloys: Prototyping and Design

49	MS	Gopinath, Sudir	12/02	Using Color and Shape Analysis for Boundary Line Extraction in Autonomous Vehicle Applications
50	MS	Whittier, Will	12/02	Kinematic Analysis of Tensegrity Structures
51	MS	Terwelp, Chris	5/03	Remote Control of Hydraulic Equipment for Unexploded Ordnance Remediation
52	MS	Henshaw, Graham	5/03	Single-Session Design: Design Methodology in Compressed Timeframes Derived from the Robot Rivals Television Series
53	MS	Corey, Chris	12/03	Epicyclic Gear Train Solution Techniques with Application to Tandem Bicycling
54	MS	Fleming, Michael	12/03	Teleoperated Control of Hydraulic Equipment for Hazardous Material Handling
55	MS	Stubbs, Matthew	12/03	Kinematic Design and Analysis of a Morphing Wing
56	MS	Bacha, Andrew	5/05	Line Detection and Lane Following for an Autonomous Robot
57	MS	Frentzel, John	5/05	A Wireless Instrumented Payload for Testing Unmanned Vehicles
58	MS	Naik, Ankur	12/05	Arc Path Collision Avoidance Algorithm for Autonomous Ground Vehicles
59	MS	Barnett, Shane	12/05	Development of a Tow Capacity Test Device for Small Unmanned Vehicles
60	MS	Cooper, Jared	12/05	Modeling of a Small-Scale Remote Controllable Helicopter for Simulation and Control Development
61	MS	Baity, Sean	5/06	Development of a Next-generation Experimental Robotic Vehicle (NERV) that Supports Intelligent and Autonomous Systems Research
62	MS	Leedy, Brett	5/06	Two Minds for One Vehicle: A Case Study in Deliberative and Reactive Navigation
63	MS	Gombar, Brett	5/06	Design and Evaluation of a Mobile Instrumentation Platform for Unmanned Vehicle Testing
64	MS	Putney, Joseph	5/06	Reactive Navigation of an Autonomous Ground Vehicle Using Dynamic Expanding Zones
65	MS	Willis, Christopher Ryan	5/06	A Kinematic Analysis and Design of a Continuously Variable Transmission
66	MS	James Hayward Bittorf	6/06	Mechanical Device to Assist the Landing of Unmanned Aerial Vehicles
67	MS	Ramirez, Rachael	8/06	Computer Vision Based Analysis of Broccoli for Application in a Selective Autonomous Harvester
68	MS	Grant Edward Gothing	7/07	Development of the “Discretized Dynamic Expanding Zones with Memory” Autonomous Mobility Algorithm for the Nemesis Tracked Vehicle Platform
69	MS	David Burns Van Covern	7/07	Collaborative Target Localization and Inspection Using a Heterogeneous Team of Autonomous Vehicles
70	MS	Thomas James Alberi	4/08	A Proposed Standardized Testing Procedure for Autonomous Ground Vehicles

71	MS	Patrick Norman Currier	4/08	Development of an Automotive Ground Vehicle Platform for Autonomous Urban Operations
72	MS	Jesse Lee Farmer	2/08	Kinematic Analysis of a Two Body Articulated Robotic Vehicle
73	MS	Chris Hockley	12/10	Development of an Autonomous Monocopter
74	MS	Katrina Corley	4/11	Supervisory Autonomous Control of Homogeneous Teams of Unmanned Ground Vehicles: Application to The Multi-Autonomous Ground-Robotic International Challenge
75	MS	Robert Andrew Lister	5/11	Classification of Marine Vessels in a Littoral Environment Using a Novel Training Database
76	MS	Kevin Rigby	8/11	Localization of Aircraft Using Wide-Baseline Stereopsis
77	MS	Lafe Zabowski	8/11	A Low Cost, Computer Vision Based, Target Tracking Hexapod
78	MS	Christine Dailey	5/12	A Novel Resistance Exercise Machine for Use in a Lower Body Negative Pressure Box to Counteract the Effects of Weightlessness

Ph.D. Students Completed				
1	PhD	Robert L. Williams II	5/88	Planar Robotic Mechanisms: Analysis and Configuration Comparison
2	PhD	Arun Veeraraghavan	9/90	The Solution of Variable-Geometry Truss Problems Using New Homotopy Continuation Methods
3	PhD	Shahriar Tavakkoli	6/91	Shape Design Using Intrinsic Geometry
4	PhD	Babu Padmanabhan	12/92	A Study of Isostatic Framework with Application to Manipulator Design
5	PhD	Robert J. Salerno	12/93	Positional Control Strategies for a Modular, Long-Reach, Truss-Type Manipulator
6	PhD	Paul Tidwell	8/95	Wrapping Cam Mechanisms
7	PhD	J. Barry Fallon	8/95	Improving the Kinematic Control of Robots by Estimating the End-Effector Pose Directly with Computer Vision
8	PhD	Steven B. Shooter	12/95	Information Modeling in Mechanical Design: With Application to Cam Mechanism Design
9	PhD	Ravi S. Voruganti	12/95	Robot System Characterization: Error Modeling, Identification, Analysis and Calibration
10	PhD	Canfield, Steve	5/98	Development of the Carpal Wrist
11	PhD	Stulce, John	1/02	Conceptual Design of a Multibody Passive-Legged Crawling Vehicle
12	PhD	Calkins, Joseph	8/02	Quantifying Coordinate Uncertainty Fields in Coupled Spatial Measurement Systems
13	PhD	Snorri Gudmundsson	12/16	A Biomimetic, Energy-Harvesting, Obstacle-Avoiding, Path-Planning Algorithm for UAVs

APPENDIX C

Charles F. Reinholtz, Ph.D., Deposition and Court Testimony 1-1-21 through 9-19-25

Year	Counsel	Opposing Counsel	Case Information (Client Shown in Boldface)	Plaintiff/ Defendant	Deposition/ Court Appearance
2021	Faegre Drinker Biddle & Reath LLP	Ruyak Cherian LLP	Team Worldwide Corporation, Plaintiff, v. Academy, Ltd. D/B/A Academy ports & Outdoors, **Intex, Coleman, Bestway** et al., Defendants, Lead Case No. 2:19-cv-00092-JRG-RSP	Defendant	Deposition, January 5 & 6, 2021, (appearing by videoconference from Colorado Springs, CO)
2021	Durie Tangri LLP	Kramer Levin Naftalis & Frankel LLP	Midwest Athletics and Sports Alliance, LLC v. **Xerox Corporation** (represented by Durie Tangri LLP) v Case No. 6:19-CV-06036-EAW-MJP.	Defendant	Deposition, September 20, 2021 (appearing by videoconference from New Smyrna Beach, FL)
2021	Kirkland & Ellis, LLP	Finnegan, Henderson, Farabow, Garrett & Dunner, LLP	**iRobot Corp.** v. SharkNinja, In The Matter of Certain Robotic Floor Cleaning Devices And Components Thereof, ITC Investigation No. 337-TA-1252	Complainant	Deposition, October 6, 2021 (appearing by videoconference from New Smyrna Beach, FL)
2021	Fish & Richardson P.C	Latham & Watkins LLP and Finnegan, Henderson, Farabow, Garrett & Dunner, LLP	AbbVie Inc. and AbbVie Biotechnology Ltd, Plaintiff, v **Alvotech Hf**., Civil Action No. 1:21-cv-2258, United States District Court for the Northern District of Illinois Eastern Division.	Defendant	Deposition, December 6, 2021, (appearing by videoconference from Boulder, CO)
2022	Kirkland & Ellis, LLP	Finnegan, Henderson, Farabow, Garrett & Dunner, LLP	**iRobot Corp.** v. SharkNinja, In The Matter of Certain Robotic Floor Cleaning Devices And Components Thereof, ITC Investigation No. 337-TA-1252	Complainant	Court Testimony, January 6, 7 and 12 (appearing by videoconference from the offices of Kirkland & Ellis, Washington, DC), ALJ: MaryJoan McNamara
2022	Faegre Drinker Biddle & Reath LLP	Crowell & Moring	Wonderland Nurserygoods Co., Ltd., Plaintiff, v. **Baby Trend, Inc**., Denny Tsai and Betty Tsai, Defendants, Case No. 5:14-cv-01153-JWH-SPx	Defendant	Deposition, April 12, 2022, Daytona Beach, FL

2022	Sterne, Kessler, Goldstein & Fox, P.L.L.C	Willkie Farr & Gallagher LLP	Provisur Technologies, Inc., Plaintiff, v. **Weber, Inc., Textor, Inc., et. al.,** United States District Court, Western District of Missouri, St. Joseph Division, Case No. 5:19-CV-06021.	Defendant	Deposition, May 5, 2023, Washington, DC
2022	Fish & Richardson P.C	Davis & Kuelthau, s.c.	Wash World Inc., Plaintiff, v. **Belanger Inc., et al.**, Defendants, Case No.: 19-Cv-1562, United States District Court Eastern District of Wisconsin	Patent Owner, Defendant	Court Testimony, United States District Court Eastern District of Wisconsin, Honorable William C. Griesbach, August 1-5, 2022
2022	Faegre Drinker Biddle & Reath LLP	Crowell & Moring	Graco Children's Products Inc. and Wonderland Nurserygoods Co., Ltd. v. **Baby Trend, Inc. et. al**, "In the Matter of Certain Playards and Strollers," ITC Investigation No. 337-TA-1288	Defendant	Deposition, September 27-28, 2022, Indianapolis, Indiana
2022	Sterne, Kessler, Goldstein & Fox, P.L.L.C	Willkie Farr & Gallagher LLP	Provisur Technologies, Inc., Plaintiff, v. **Weber, Inc., Textor, Inc., et. al.,** United States District Court, Western District of Missouri, St. Joseph Division, Case No. 5:19-CV-06021.	Defendant	Court Testimony, October 25 & 26, United States District Court, Western District of Missouri, Kansas City
2022	Faegre Drinker Biddle & Reath LLP	Crowell & Moring	Graco Children's Products Inc. and Wonderland Nurserygoods Co., Ltd. v. **Baby Trend, Inc. et. al**., "In the Matter of Certain Playards and Strollers," ITC Investigation No. 337-TA-1288	Defendant	ITC Court Testimony, Washington, DC, December 13-15, 2022, ALJ: Bryan F. Moore
2023	Fish and Richardson	K&L Gates LLP	**Kidde** v. First Alert & BRK, USDC WDTX (CA No. 6:22-00566) Civil Action No. 6:22-cv-411-ADA	Plaintiff	Deposition Testimony, Atlanta, GA, January 4, 2023
2023	Fish and Richardson	Husch Blackwell LLP	MGI Digital Technology S.A v **Duplo U.S.A.**, Case No. 8:22-cv-00979-DOC-KES, District Court for the Central District of California	Defendant	Deposition, March 7, 2023 (appearing by videoconference from New Smyrna Beach, FL)

2023	Fish and Richardson	Morgan, Lewis & Bockius LLP	**Persawvere, Inc**., v. Milwaukee Electric Tool Corporation, C.A. no. 21-cv-00400-GBW	Plaintiff	Deposition, Wilmington, DE, July 11, 2023
2023	Fish and Richardson	K&L Gates LLP	**Kidde** v. First Alert & BRK, USDC WDTX (CA No. 6:22-00566) Civil Action No. 6:22-cv-411-ADA	Plaintiff	Deposition Testimony, Atlanta, GA, October 27-28, 2023
2023	Fish and Richardson	Husch Blackwell LLP	MGI Digital Technology S.A v **Duplo U.S.A.**, Case No. 8:22-cv-00979-DOC-KES, District Court for the Central District of California	Defendant	Deposition, March 7, 2023 (appearing by videoconference from New Smyrna Beach, FL)
2023	Fish and Richardson	Morgan, Lewis & Bockius LLP	**Persawvere, Inc**., v. Milwaukee Electric Tool Corporation, C.A. no. 21-cv-00400-GBW	Plaintiff	Court Testimony, U. S. District Court, District of Delaware, December 5-7, 2023, Wilmington, DE
2023	Cravath, Swaine & Moore, LLP	Hausfeld, LLP	Mohawk Gaming Enterprises, LLC, v. **Light & Wonder, Inc.,** Case No. 01-20-0015-6196	Defendant	Deposition, December 21, 2023, (appearing by videoconference from New Smyrna Beach, FL)
2024	Fish and Richardson	Husch Blackwell LLP	MGI Digital Technology, v **DUPLO U.S.A. Corp**., Case No. 8:22-CV-00979-DOC-KES	Defendant	Court testimony, February 6-9, 2024, US District S. District of Central California, Judge David O. Carter
2024	Knobbe, Martens, Olson & Bear, LLP and Katten Muchin Rosenman LLP	Fenwick and West, LLP	Novo Nordisk Inc. v **Orbicular Pharmaceutical and Biocon**, C.A. No.: 22-856 (Cfc)	Defendant	Deposition, Charlotte, North Carolina, February 27, 2024
2024	Fish and Richardson	Morgan, Lewis & Bockius LLP	**Persawvere, Inc**., v. Milwaukee Electric Tool Corporation, C.A. No. 21-cv-00400-GBW	Plaintiff	Court Testimony, Wilmington, DE, March 6, 2024
2024	Finnegan, Henderson, Farabow, Garrett & Dunner, LLP	Quinn, Emanuel, Urquhart & Sullivan, LLP	Boston Dynamics, Inc. v. **Ghost Robotics Corporation**, Case No. 1:22-cv-01483-MN (D. Del)	Defendant	Deposition, Washington, DC, July 20, 2024

2024	Erise IP, P.A.	Willkie Farr & Gallagher LLP	IPR2024-00224, U.S. Patent No. 9,457,487, Provisur Technologies, Inc., Petitioner, v. **Textor Maschinenbau GMBH**, Patent Owner	Patent Owner	Deposition, Denver, CO, Aug. 23, 2024
2024	Erise IP, P.A.	Willkie Farr & Gallagher LLP	IPR2024 U.S. Patent No. 8,529,321 Provisur Technologies, Inc., Petitioner, v. **Textor Maschinenbau GMBH**, Patent Owner	Patent Owner	Deposition, Denver, CO, Nov. 15, 2024
2025	Fish and Richardson	Erise IP, P.A.	Ravin Crossbows, LLC Petitioner v. **MCP IP, LLC** Patent Owner, Case No. IPR2024-00522	Plaintiff	Deposition, Dallas, TX, February 11, 2025
2025	Fish and Richardson	Ryan Kromholz & Manion, S.C.	GMR Safety, Inc. v Systems, LLC Case No. 1:24-cv-02024	Defendant	Deposition, April 23, 2025 (appearing by videoconference from New Smyrna Beach, FL)