April 22, 1969 R. R. MYERS 3,439,368

SWIMMING POOL CLEANER

Filed Jan. 3, 1967 Sheet 1 of 4

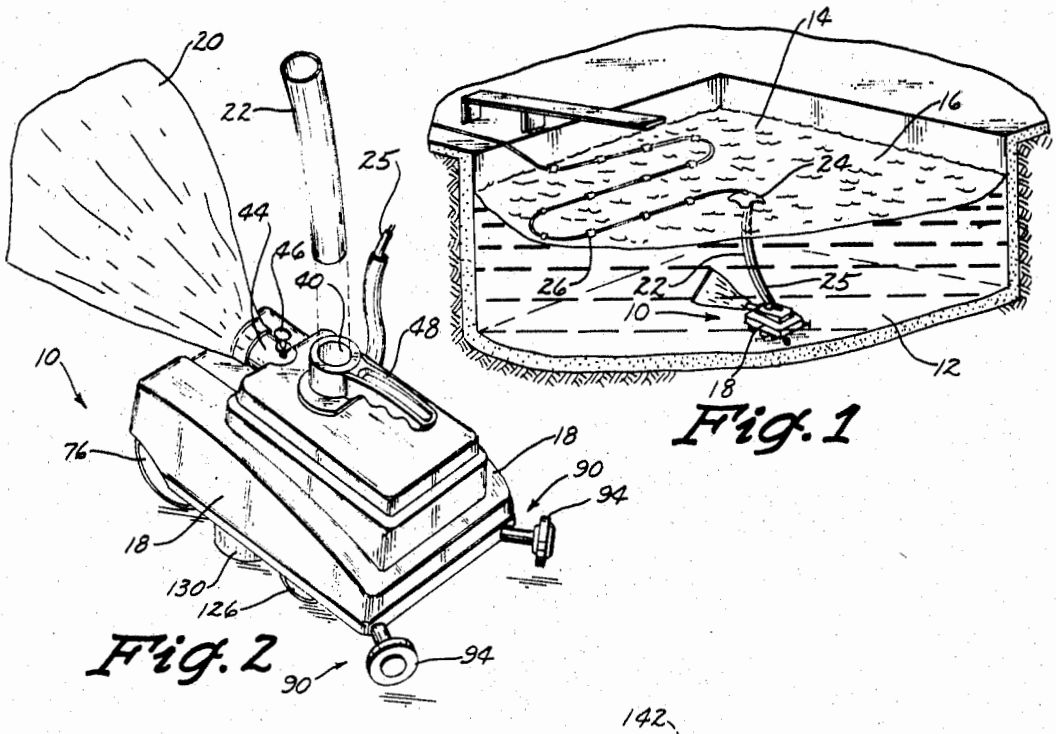

Fig. 1

Fig. 2

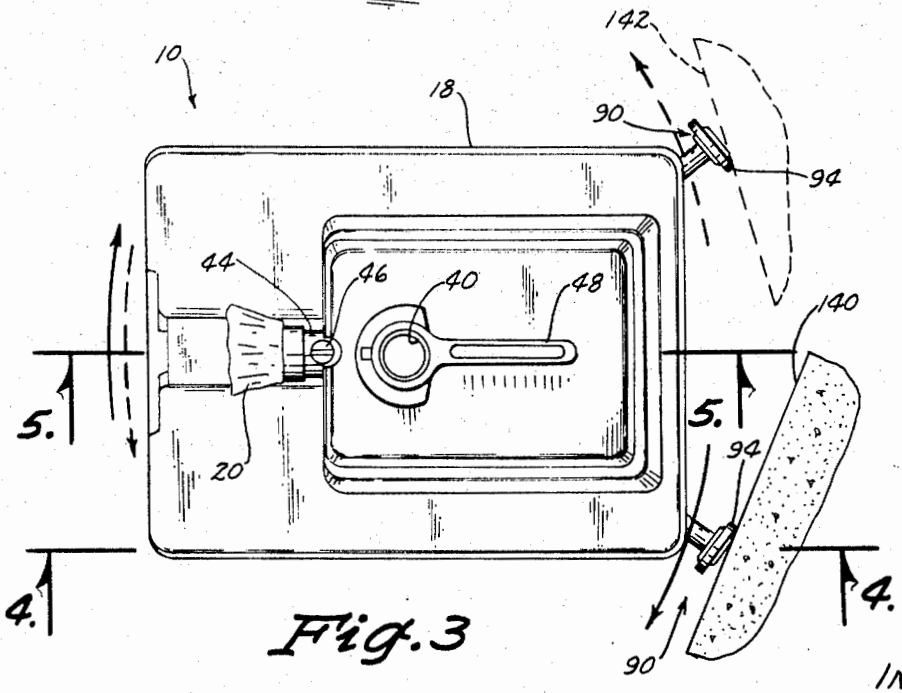

Fig. 3

INVENTOR
ROBERT R. MYERS
BY
Dick, Zarby, McKee + Thomte
ATTORNEYS

SWIMMING POOL CLEANER

Filed Jan. 3, 1967 Sheet 2 of 4

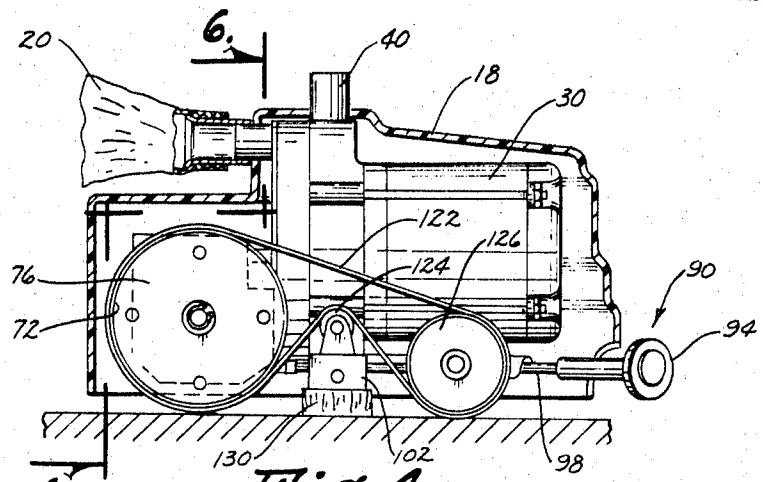

Fig. 4

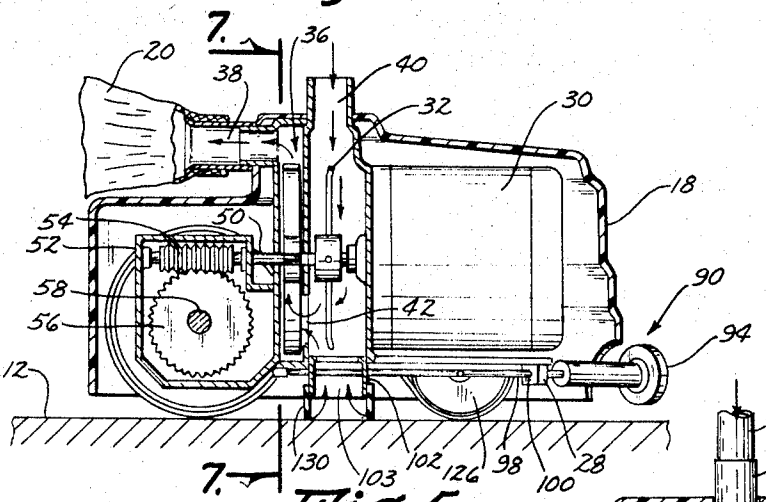

Fig. 5

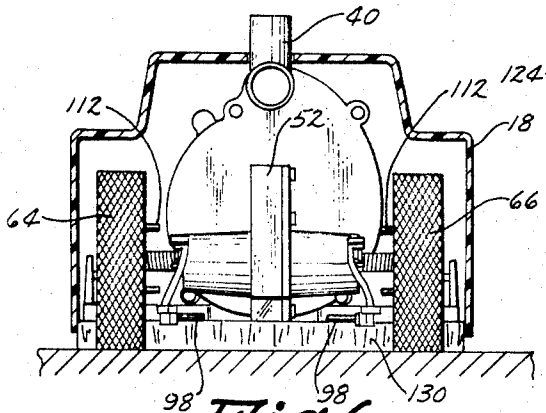

Fig. 6

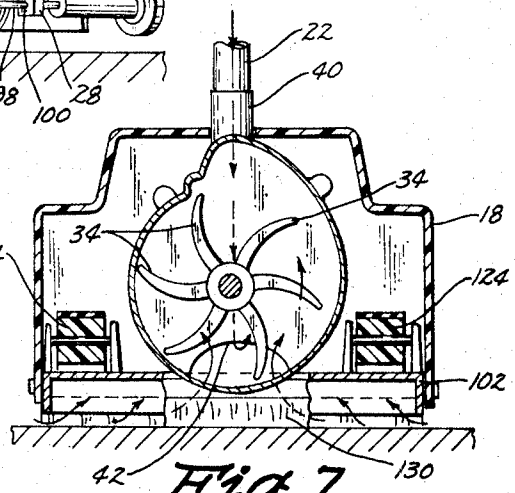

Fig. 7

INVENTOR
ROBERT R. MYERS
BY
Dick, Zarley, McKee & Thomas
ATTORNEYS

April 22, 1969 R. R. MYERS 3,439,368

SWIMMING POOL CLEANER

Filed Jan. 3, 1967 Sheet 3 of 4

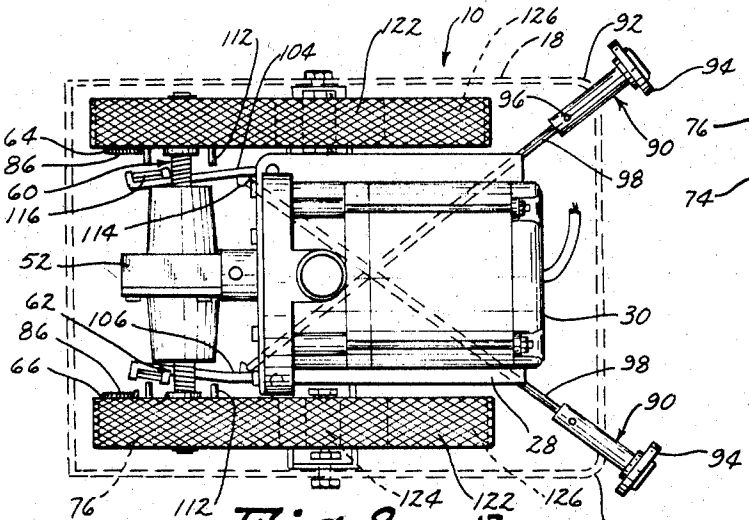

Fig. 8

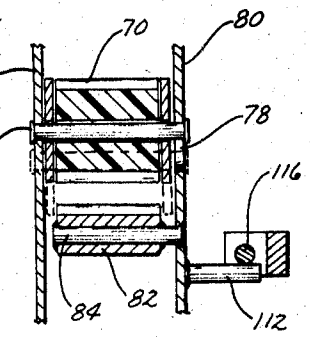

Fig. 11

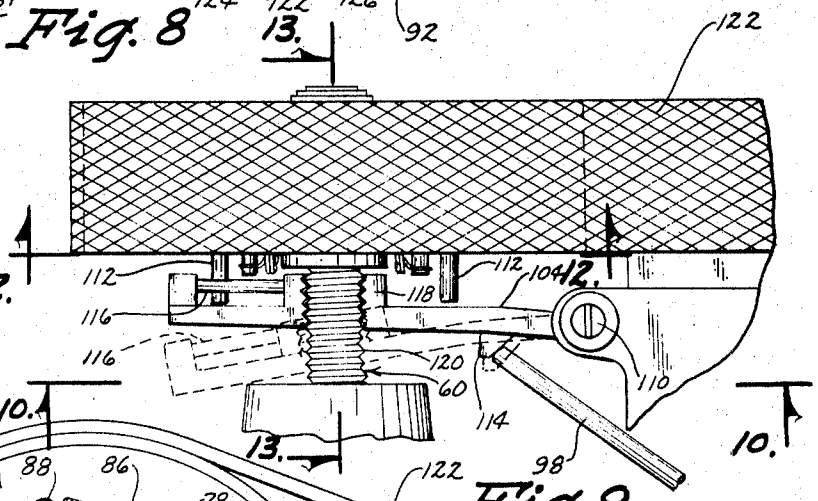

Fig. 9

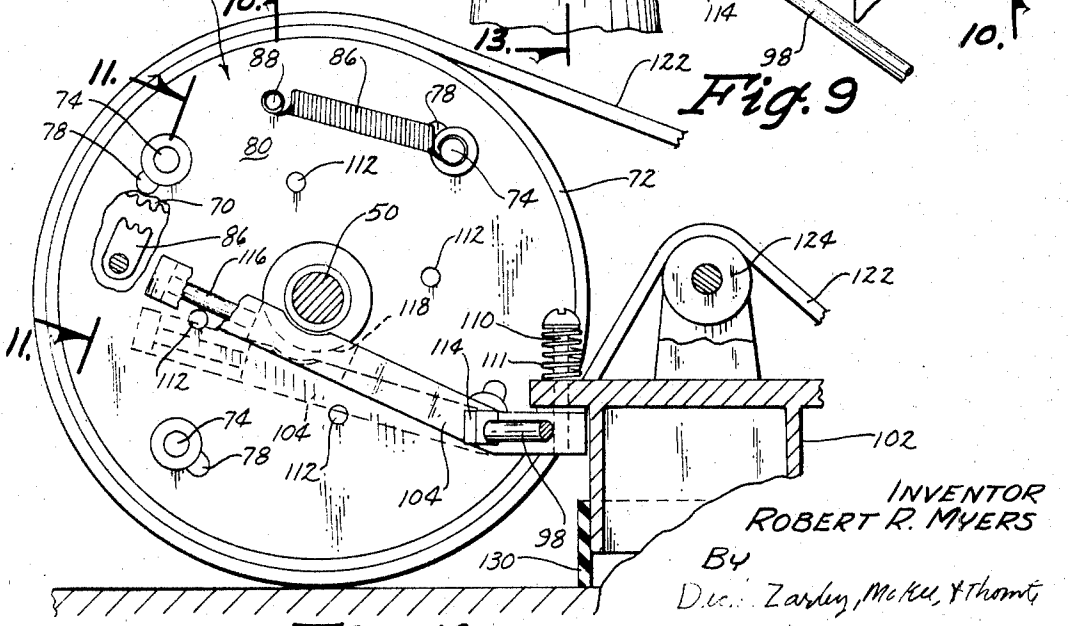

Fig. 10

INVENTOR
ROBERT R. MYERS
BY
D. C. Zarley, McKie, & Thomas
ATTORNEYS

April 22, 1969 R. R. MYERS 3,439,368

SWIMMING POOL CLEANER

Filed Jan. 3, 1967 Sheet 4 of 4

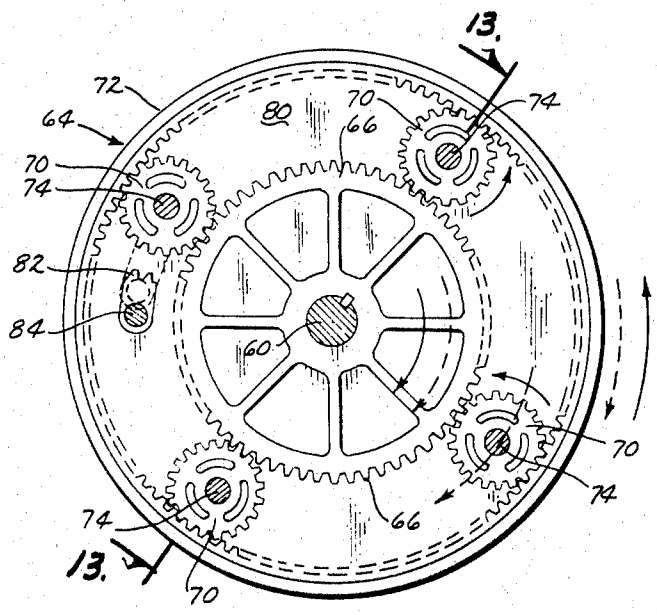

Fig. 12

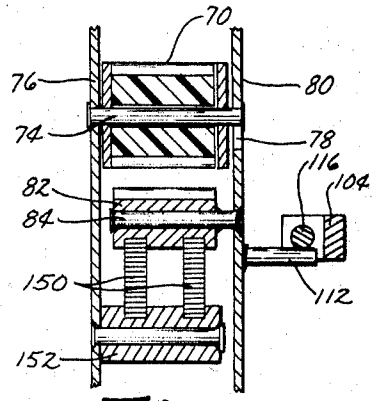

Fig. 15

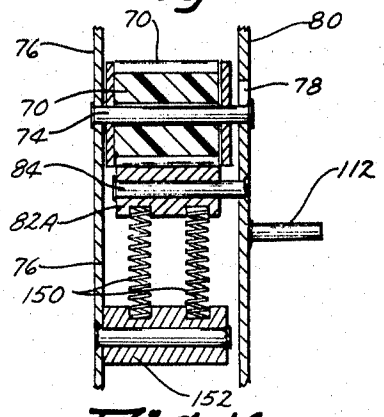

Fig. 16

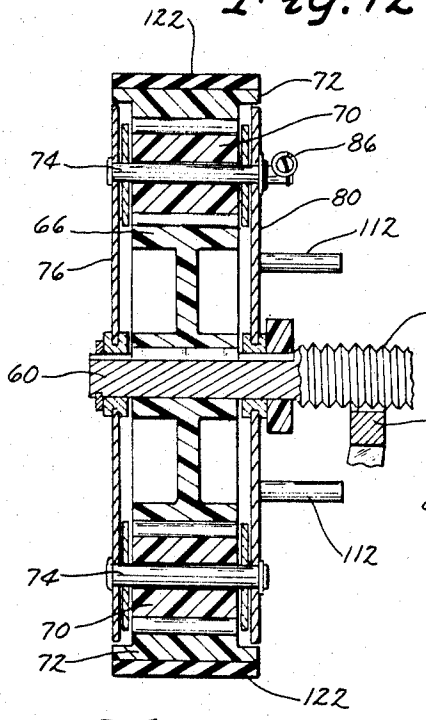

Fig. 13

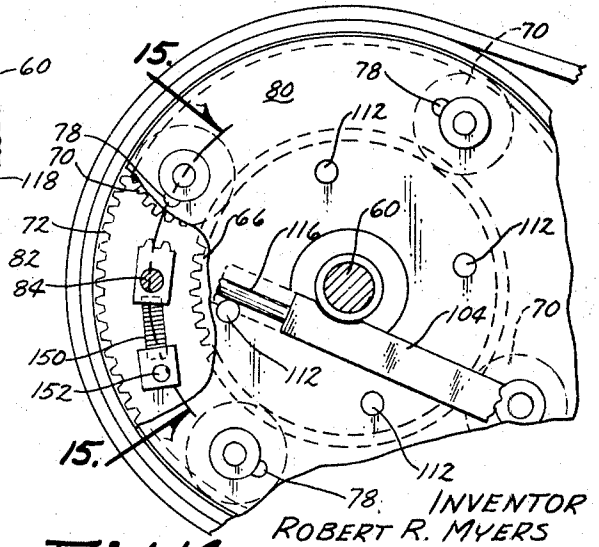

Fig. 14

INVENTOR
ROBERT R. MYERS
BY
Dick, Zarley, McKie & Thomas
ATTORNEYS

United States Patent Office

3,439,368

Patented Apr. 22, 1969

1

3,439,368

SWIMMING POOL CLEANER

Robert R. Myers, 904 NE. 2nd St.,
Boca Raton, Fla. 33432

Filed Jan. 3, 1967, Ser. No. 606,663
Int. Cl. E04h 3/20; A47l 5/00
U.S. Cl. 15—1.7 14 Claims

ABSTRACT OF THE DISCLOSURE

A machine for cleaning the bottom and the surface of swimming pools wherein the machine is movable along the bottom and is provided with a guidance control system which will change the direction of travel a predetermined amount as the machine encounters obstructions to the side or front such as the sidewalls of the pool. The machine may be of a crawler type and has a transmission for automatically controlling the forward and reverse rotation of the drive wheels whereby one or both drive wheels may be operating in the same direction at the same time. Sensing means for actuating the transmission are provided and are adjustable to assure that the machine will clean the maximum area of the pool but prevent it from being overturned.

The applicant has disclosed in previously filed applications earlier models of cleaning machines for swimming pools. For example, in application Ser. No. 419,136 filed Dec. 17, 1964, and now Patent No. 3,321,787 cleaning brushes were provided for contact with the bottom of the pool and served to help propel the machine. In patent application Ser. No. 477,389, now Patent No. 3,324,492 among other structural improvements the guidance system was changed to include an idler wheel for contacting obstructions to change the direction of travel of the machine over the bottom of the pool.

The machine of this invention involves positive control of the guidance system upon encountering an obstruction at either the front or the side of the machine. The sensing elements at opposite front corners of the machine will be actuated by lateral or frontal forces and are coupled directly to transmission means for reversing the direction of one or more of the drive wheels. The drive wheels upon being rotated rearwardly may be set to return to their forward rotational movement after being rotated a predetermined time in reverse whereby the machine is turned a predetermined number of degrees from its original line of travel to thereby move around an obstruction. The number of degrees the machine turns upon one or more of the sensing elements being actuated may be varied as desired. If both of the sensing elements on the front of the machine are actuated the machine will then operate in reverse for a predetermined time. The machine having sensing elements at opposite front corners of the frame has the sensing elements coupled to diagonally opposite rearward drive wheels to thereby facilitate movement away from or around obstructions particularly to the side of the machine. The actuating lever which operates the transmission means to cause it to turn the drive wheels in a reverse direction is at the same time moved into operative engagement with the continuously rotating drive shaft for the drive wheels and through cooperating threads on the lever and drive shaft the lever returns the transmission to its forward drive position.

These and other features and advantages of this invention will become readily apparent to those skilled in the art upon reference to the following description when taken

2

into consideration with the accompanying drawings, wherein:

FIG. 1 is a fragmentary perspective view of the swimming pool cleaner in use in a filled pool;

FIG. 2 is a perspective view of the cleaner machine only;

FIG. 3 is a top plan view of the cleaner machine in various positions relative to obstructions;

FIG. 4 is a side elevation cross-sectional view of the cleaner machine taken along line **4—4** in FIG. 3;

FIG. 5 is a cross-sectional view of the cleaner machine taken along line **5—5** in FIG. 3;

FIG. 6 is a end cross-sectional view taken along line **6—6** in FIG. 4;

FIG. 7 is a cross-sectional view taken along line **7—7** in FIG. 5;

FIG. 8 is a top plan view with the housing removed;

FIG. 9 is an enlarged fragmentary view of the drive shaft in relationship to the transmission lever and drive wheel;

FIG. 10 is an enlarged side elevation fragmentary view taken along line **10—10** in FIG. 9;

FIG. 11 is a cross-sectional view along line **11—11** in FIG. 10;

FIG. 12 is a cross-sectional view of a transmission unit associated with one of the drive wheels taken along line **12—12** in FIG. 9;

FIG. 13 is a cross-sectional view taken along line **13—13** in FIG. 9;

FIG. 14 is a fragmentary side elevation view of an alternate wheel transmission unit having a driving dog internally mounted and spring biased into engagement with a spur gear;

FIG. 15 is a cross-sectional view taken along line **15—15** in FIG. 14; and

FIG. 16 is a cross-sectional view similar to FIG. 15 but showing the driving dog disengaged from the spur gear when the drive wheel is being operated in a reverse direction.

The cleaner machine of this invention is referred to generally in FIG. 2 by the reference numeral **10** and is illustrated in FIG. 1 on the bottom **12** of a swimming pool **14** filled with water **16**.

A plastic or the like housing **18** encloses the machine and extending externally from the machine **10** is a cleaner bag **20** and a water conduit **22** connected to a flotation unit **24** at the top of the water **16**. Electrical power is supplied through lead wires **25** supported by the floatation unit **24** having supplemental smaller units **26**. The floatation unit **24** for cleaning the water at the top surface and holding the lead wires **25** are more fully disclosed and described in applicant's co-pending patent application, Ser. No. 477,389 filed Aug. 5, 1965.

Referring now to FIG. 8 it is seen that a frame is formed by a motor base **28** having a motor **30** mounted thereon connected directly to a chopper assembly **32** (FIG. 5) having curved radial blades **34** (FIG. 7), and thence to a pump assembly **36** having an outlet conduit **38**. The chopper assembly **32** is mounted in a chamber **40** in communication with the pump through an opening **42** which in turn is in communication with the outlet conduit **38** which is connected to the cleaner bag **20**.

As seen in FIG. 2 the cleaner bag **20** has a sleeve portion **44** telescopically mounted on the outlet conduit **38** and is locked thereto by a thumb screw **46**. A handle member **48** is locked by a set screw (not shown) to the surface water inlet conduit **40** and in turn receives the water conduit **22** which is held by set screws carried by the handle member **48** which are not shown.

Referring again to FIG. 5, a drive shaft **50** extending rearwardly from the motor **30** drives the chopper assem-

bly **32** and the pump **36** and then extends into a gear box **52** which includes a worm **54** in engagement with a worm gear **56** mounted on a transversely extending drive shaft **58**.

The drive shaft **58** is coupled through its outwardly extending portions **60** and **62** to rear drive wheels **64** and **66** respectively (FIG. 8). Each of the drive wheels **64** and **66** include a forward and reverse drive transmission **68** shown specifically in FIGS. 12 and 13.

The drive wheels and transmissions **68** are identical except that they face in opposite directions and include a sprocket gear **66** (FIG. 12) keyed to the drive shaft portion **60** and in turn intermeshed with a plurality of spur gears **70** which are in engagement on the inner side of an outer ring gear **72** which forms the wheels **64**. Each of the spur gears **70** are rotatably mounted on shafts **74** affixed to an outer plane **76** (FIG. 13). The inner ends of the spur gear shafts **74** are movably received in arcuate slots **78** formed in an inner plate **80**. A driving dog **82** (FIGS. 11 and 12) carried on a shaft **84** affixed to the inner plate **80** is biased into engagement with a spur gear **70** by a tension spring **86** (FIG. 10) mounted on the inner face of the inner plate **80** and being anchored to a pin **88** affixed to the inner plate and connected at its opposite end to the shaft **74** of the spur gear **70** in engaging the driving dog **82**.

Accordingly, as the driving shaft **58** is rotated and the end portion **60** turns the inner sprocket gear **66** the rotational movement is transmitted directly through the spur gears **70** which are prevented from rotating by the driving dog **82**, to the ring gear **72** which then causes the wheels **64** to rotate in the forward direction as indicated by the dash line arrows in FIG. 12. The dash line arrows further indicate in FIG. 12 the rotational movement of the spur gears **70** with the sprocket gear **66** when the wheel **64** is being driven forwardly.

The manner in which the drive wheels are reversed will now be described.

Referring to FIG. 8 for example it is seen that a pair of sensing members **90** are longitudinally adjustably positioned at the opposite forward corners **92** of the machine **10** and include roller elements **94** exposed to the front and the longitudinal sides of the machine housing **18**. A set screw **96** permits longitudinal adjustment of the sensing members **90** on an elongated shaft **98** which extends diagonally across the machine frame **28** to adjacent the rear wheels **64** and **66**. As seen in FIG. 5, a guide block **100** is mounted on the frame **28** at the forward end for the rods **98** and they are guided at their rearward ends by aligned openings in the walls **102** of a floor vacuum inlet opening **103**.

The rearward ends of the rods **98** are engageable with pivotal lever arms **104** and **106** (FIG. 8) which in turn actuate the wheel transmission units **68**.

The lever arm **104** as illustrated in FIGS. 9 and 10 is pivotally mounted in a horizontal plane on a pin **110** and is movable in a vertical plane against the action of a spring **111**. An abutment shoulder **114** is provided adjacent the pin **110** for engagement with the inner end of the rod **98** which when actuated tends to pivot the arm **104** outwardly towards the wheel **64**. A series of stop pins **112** are mounted on the inner plate **80** for engagement with a roller pin element **116** on the outer end of the lever **104** and parallel thereto.

As seen in FIG. 10, the arm **104** extends under the drive shaft **50** and has a threaded portion **118** for engagement with threads **120** on the outer shaft end **60**. The threads of these two members are designed to move the arm **104** outwardly away from the stop pins **112** upon their being engaged as shown by the solid and dash line positions in FIG. 9 of the arm **104**. It is thus appreciated that upon the sensing element **94** moving the rod **98** against the abutment shoulder **114** the locking arm **104** is pivoted inwardly into engagement with the stop pin **112** which causes the arm to pivot upwardly for the threaded portion **118** to engage the threaded shaft portion **60** and thus as the shaft continues this rotation the arm is then threaded outwardly again. When the stop pin **112** has engaged the roller **116** on the lock arm **104** the spur gear **70** moves on its shaft **74** in the slot **78** away from the driving dog **82** and thereupon begins rotation about its axis extending through the shaft **74** which in turn causes the ring gear **72** to reverse its direction of rotation as seen by the solid line arrow in FIG. 12. The rotation of the spur gears **70** are also indicated by the solid line arrows in FIG. 12. It is appreciated that when the arm **104** is out of engagement with the stop pins **112** the tension spring **86** will cause the driving dog **82** to re-engage the spur gear **70** and thus return the driving wheels to their forward direction of rotation.

The traction for the machine **110** is provided by a tread belt **122** which extends around the wheels **64** and **66** and over idler adjustment pulleys **124** (FIG. 10) forwardly around front wheels **126** which are driven by the tread belt **122**.

Thus then it is seen that debris on the bottom **12** (FIG. 5) of the pool will be sucked in through the inlet opening **104** and closed by a flexible rubber sealing sleeve **130** in frictional engagement with the bottom pool surface **12**, and/or liquid may enter from the top through the inlet **40** at any desired level in the water **16** such as at the surface as shown in FIG. 1. The chopper blade members **34** will pulverize large debris such that the pump **36** can easily discharge it out through the outlet conduit **38** into the screen bag **20**. The bag is porous and thus the water is returned to the pool.

The sensing members **90** may be set at any distance forwardly of the front end of the machine **10** such that they will engage wall surfaces **140** or **142** as shown in FIG. 3 as desired. For example, the machine may be permitted to climb a curved wall a distance less than that which would cause the machine to overturn.

It is understood that for example as viewed in FIG. 8, when the lower sensing element **90** is actuated the driving wheel **64** will be reversed on the opposite side of the machine and consequently the forward end will be turned away from the obstruction engaging the sensing element **90**. A similar reaction will occur when the upper sensing element is actuated as viewed in FIG. 8 from the top of the machine. It has been found that this facilitates the movement of the machine around obstructions. The amount of turning that occurs during each operation may be selectively varied but preferably is 90 degrees. The length of the threads **120** on the drive shaft portions **60**, as well as for example the length of the stop pins **112** may be varied to accomplish this end.

An alternate embodiment of the means for biasing the driving dog into engagement with the spur gear **70** is illustrated in FIGS. 14–16 and includes a pair of expansion springs **150** anchored to a transversely extending member **152** between the sprocket gear **66** and the ring gear **70**. The anchoring member **152** for the expansion springs **150** is affixed to the outer plate **76** while the driving dog **82A** is affixed to the inner plate **80** and thus when the rotation of the inner plate **80** is stopped by the arm **104** engaging the stop pin **112** the outer plate **76** tends to rotate forwardly away carrying with it the spur gear **70** normally engaging the driving dog **82A** as seen in FIGS. 15 and 16 as well as FIG. 14. This arrangement shown in these figures has among other advantages the advantage of being enclosed such that it will not collect debris and the like from the pool.

Some changes may be made in the construction and arrangement of my swimming pool cleaner without departing from the real spirit and purpose of my invention, and it is my intention to cover by my claims, any modified forms of structure or use of mechanical equivalents which may be reasonably included within their scope.

I claim:

1. A pool cleaner machine, comprising,

a frame,

a pool cleaning means operatively connected to said frame,

a support engaging drive wheel on said frame,

a power means,

a transmission means coupling said power means to said drive wheel, said transmission means selectively operable for driving said wheel frontwardly and rearwardly,

a direction sensing means operatively coupled to said transmision,

said power means normally driving said drive wheel forwardly through said transmission means and said sensing means upon being actuated thereby causing said transmission means to drive said drive wheel rearwardly,

a second drive wheel being provided on said frame, said first and second drive wheels being spaced apart and positioned adjacent opposite sides of said frame,

a second direction sensing means in spaced apart relationship adjacent one end of said frame,

said transmission means coupling said power means to said second drive wheel and operable to selectively individually reverse the direction of rotation of said drive wheels, said first sensing means operatively connected through said transmission to said first drive wheel and said second sensing means operatively connected through said transmission to said second drive wheel whereby at times said drive wheels may each be rotating forwardly and at other times each of said drive wheels will be rotating in opposite directions relative to each other and thereby causing said machine to change the direction of its line of travel,

and a control means limiting individually the duration of reverse drive of said drive wheels.

2. A pool cleaner machine, comprising,

a frame,

a pool cleaning means operatively connected to said frame,

a support engaging drive wheel on said frame,

a power means,

a transmission means coupling said power means to said drive wheel, said transmission means selectively operable for driving said wheel frontwardly and rearwardly,

a direction sensing means operatively coupled to said transmission,

said power means normally driving said drive wheel forwardly through said transmission means and said sensing means upon being actuated thereby causing said transmission means to drive said drive wheel rearwardly,

said transmission including a stop pin on said wheel, an actuating lever on said frame movable into and out of engagement with said stop pin, said direction sensing means being movable into engagement with said actuating lever, and a drive shaft extending from said power means to said transmission, said lever extending across said drive shaft and having a threaded portion for engagement with a threaded portion on said drive shaft, said lever being movable into engagement with said stop pin by said sensing means and said threaded portion on said lever being movable into engagement with said shaft threaded portion by said stop pin as said wheel is rotated, and said lever being moved out of engagement with said stop pin by said shaft rotating and threading said lever outwardly from said wheel whereby said transmission returns to a forward drive.

3. The structure of claim **1** wherein said control means and transmission include a stop pin on each of said wheels, an actuating lever on said frame adjacent each of said wheels movable into and out of engagement with said stop pin, each of said direction sensing means being movable into engagement with one of said actuating levers, and a drive shaft extending from said power means, said levers extending across said drive shaft and having a threaded portion for engagement with a threaded portion on said drive shaft, said levers being movable into engagement with said stop pins by said respective sensing means and said threaded portions on said levers being movable into engagement with said shaft threaded portion by said stop pin as said wheels are rotated, said levers being moved out of engagement with said stop pin by said shaft rotating and threading said levers outwardly from said wheels whereby said transmission returns to a forward drive.

4. The structure of claim **3** wherein said transmission includes a drive gear for each wheel fixed to said drive shaft, a plurality of spur gears disposed between and in engagement with a said drive gear and a ring gear, an inner side wall over said spur gears and carrying said stop pin, said spur gears being rotatably mounted on shafts extending through slots formed in said sidewall, a driving dog normally spring biased into engagement with one of said spur gears whereby said ring gear rotates as a unit with said wheel forwardly and rotates with said drive gear until said actuating lever engages said stop pin and thereby stops rotation of said spur gears around said drive gear whereby said spur gears rotate about their own axis and turn said ring gear and said wheel in the opposite reverse direction.

5. A pool cleaner machine, comprising,

a frame,

a pool cleaning means operatively connected to said frame,

a support engaging drive wheel on said frame,

a power means,

a transmission means coupling said power means to said drive wheel, said transmission means selectively operable for driving said wheel frontwardly and rearwardly,

a direction sensing means operatively coupled to said transmission,

said power means normally driving said drive wheel forwardly through said transmission means and said sensing means upon being actuated thereby causing said transmission means to drive said drive wheel rearwardly,

a control means is provided for limiting the duration of rearward drive by said transmission means,

and a second drive wheel on said frame and in spaced relation to said first wheel, a second direction sensing means on said frame in spaced relation to said first sensing means, said first and second sensing means being located at opposite front corners of said frame and means operatively coupling said sensing elements to diagonally opposite wheels located rearwardly of said sensing elements, whereby actuation of one of said sensing elements causes the diagonally opposite wheel to rotate in reverse and actuation of the other sensing element causes the other driving wheel to rotate in a reverse direction.

6. The structure of claim **5** and a pump is carried on said frame, said pump having an inlet opening exposed under said frame adjacent the supporting surface and an outlet connected to a filter unit.

7. The structure of claim **6** wherein a second inlet opening is connected to said pump through an elongated tube, said inlet opening being in the outer free end of said tube, and flotation means for holding said inlet end of said tube adjacent the surface of a swimming pool.

8. The structure of claim **5** wherein a second pair of wheels are positioned between said drive wheels and said sensing elements and a tread belt extends around one wheel of each pair on each side of said frame.

9. The structure of claim **6** wherein said pump includes a pumping chamber and a debris conditioning chamber in communication with each other and said inlet opening being in communication with said outlet opening through

said conditioning chamber and then said pumping chamber, shredding members rotatably positioned in said conditioning chamber.

10. A pool cleaner machine, comprising,

a frame having front and rear ends and a pair of driving wheels at its rear end,

a pump on said frame and having inlet and outlet openings,

a power means coupled to a drive shaft extending between said pair of driving wheels, and said power means being coupled to said pump,

a transmission means associated with each of said drive wheels and connected to said drive shaft for rotating said drive wheels selectively forwardly and rearwardly,

a sensing element at each forward corner of said frame,

an actuating lever pivotally connected to said frame adjacent each of said drive wheels and extending towards said adjacent drive wheel across said drive shaft,

each of said transmission means having an inner plate rotatable on said shaft with the adjacent wheel when said wheel is rotated forwardly,

a stop means on each of said plates spaced radially outwardly from the plate's axis of rotation.

said levers and drive shaft having mating threaded portions,

each of said sensing elements engageable with one of said levers to pivot said lever towards said adjacent plate upon said sensing element being actuated for said pin to engage said lever and stop rotation of said plate, said plate tending to rotate forwardly when said stop means engages said lever and thereby pivot said lever towards said shaft for said lever and shaft threaded portions to engage each other, said shaft being threaded to pivot said lever away from said plate and out of engagement with said stop means as said shaft is rotated, and

each of said transmission means including wheel reversing means for reversing said drive wheel rotation when said plate rotation is stopped by said lever.

11. The structure of claim **10** wherein each of said sensing elements are operatively connected to diagonally opposite drive wheels.

12. The structure of claim **10** wherein each of said transmission means includes a drive gear on said drive shaft, a plurality of spur gears engageable between a ring gear and said drive gear, said spur gears being mounted in shafts movable in arcuate slots formed in said plate, said spur gear shafts being fixed to a second plate rotatable on said drive shaft, a driving dog spring biased into engagement with one of said spur gears and being fixed to said inner plate whereby upon said the rotation of said inner plate being stopped said one spur gear rotates out of engagement with said driving dog against the action of said spring and thereby causes said ring gear to rotate in a reverse direction with said spur gears remaining stationary relative to said drive shaft and rotating relative to their respective shafts fixed to said second plate, and said wheels and associated ring gears being coupled to always rotate in a common direction.

13. The structure of claim **10** wherein said sensing elements are movable along axes extending forwardly and outwardly of said frame and the line of travel of said frame whereby said sensing elements are adapted to be actuated by obstructions positioned either to the front or side of said frame and its line of travel.

14. The structure of claim **10** wherein said sensing elements are adjustable longitudinally relative to the front end of said frame.

References Cited

UNITED STATES PATENTS

2,923,954	2/1960	Babcock	15—1.7
2,988,762	6/1961	Babcock	15—1.7
3,254,355	6/1966	Shaw	15—1.7

EDWARD L. ROBERTS, *Primary Examiner.*

U.S. Cl. X.R.

15—319