US011003191B2

(12) **United States Patent**
Durvasula et al.

(10) **Patent No.: US 11,003,191 B2**
(45) **Date of Patent: *May 11, 2021**

(54) **POOL CLEANING SYSTEM AND METHOD TO AUTOMATICALLY CLEAN SURFACES OF A POOL USING IMAGES FROM A CAMERA**

(71) Applicant: **ZODIAC POOL SYSTEMS LLC**, Carlsbad, CA (US)

(72) Inventors: **Kameshwar Durvasula**, Garfield, NJ (US); **William Londono Correa**, Bloomfield, NJ (US)

(73) Assignee: **ZODIAC POOL SYSTEMS LLC**, Carlsbad, CA (US)

(*) Notice: Subject to any disclaimer, the term of this patent is extended or adjusted under 35 U.S.C. 154(b) by 0 days.

This patent is subject to a terminal disclaimer.

(21) Appl. No.: **16/919,750**

(22) Filed: **Jul. 2, 2020**

(65) **Prior Publication Data**

US 2020/0333797 A1 Oct. 22, 2020

Related U.S. Application Data

(63) Continuation of application No. 16/416,840, filed on May 20, 2019, now Pat. No. 10,739,785, which is a (Continued)

(51) **Int. Cl.**
G05D 1/02 (2020.01)
H04N 7/18 (2006.01)
(Continued)

(52) **U.S. Cl.**
CPC ***G05D 1/0246*** (2013.01); ***E04H 4/1654*** (2013.01); ***G05D 1/0016*** (2013.01);
(Continued)

(58) **Field of Classification Search**
CPC .. G05D 1/0246; G05D 1/0016; G05D 1/0033; G05D 1/0038; G05D 2201/0203;
(Continued)

(56) **References Cited**

U.S. PATENT DOCUMENTS

5,205,174 A 4/1993 Silverman et al.
5,435,031 A 7/1995 Minami et al.
(Continued)

FOREIGN PATENT DOCUMENTS

CN 101139007 3/2008
EP 0687964 12/1995
(Continued)

OTHER PUBLICATIONS

U.S. Appl. No. 13/545,918, Corrected Notice of Allowability dated Jun. 8, 2016, 2 pages.
(Continued)

Primary Examiner — Allen C Wong
(74) *Attorney, Agent, or Firm* — Kilpatrick Townsend & Stockton LLP; Dean W. Russell

(57) **ABSTRACT**

A pool cleaning system for cleaning debris from a submerged surface of a swimming pool includes a self-propelled pool cleaner having rotatably-mounted supports for supporting and guiding the cleaner on the pool surface; an electric motor for enabling the rotation of the rotatably-mounted supports on the pool surface; at least one camera to capture imagery of the pool surface; a controller, in electronic communication with the at least one camera, to determine a cleanliness characteristic of the pool surface on which the cleaner has passed based on the camera imagery and generate a control signal to direct movement of the cleaner based on the cleanliness characteristic of the pool surface, and a portable electronic device configured to present a graphic on a display, the graphic depicting the
(Continued)

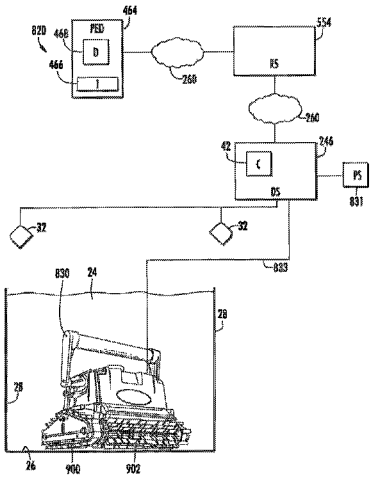

submerged surface of the pool and those portions of the surface that remain uncleaned as the cleaner traverses the pool surface.

3 Claims, 4 Drawing Sheets

Related U.S. Application Data

continuation of application No. 15/973,983, filed on May 8, 2018, now Pat. No. 10,338,599, which is a continuation of application No. 15/207,065, filed on Jul. 11, 2016, now Pat. No. 9,995,051, which is a continuation of application No. 13/545,918, filed on Jul. 10, 2012, now Pat. No. 9,388,595.

(51) **Int. Cl.**

H04N 5/232	(2006.01)
E04H 4/16	(2006.01)
G05D 1/00	(2006.01)
H04N 5/225	(2006.01)
G06T 7/90	(2017.01)
G06T 7/00	(2017.01)

(52) **U.S. Cl.**
CPC ***G05D 1/0033*** (2013.01); ***G05D 1/0038*** (2013.01); ***H04N 5/23203*** (2013.01); ***H04N 7/18*** (2013.01); *G05D 2201/0203* (2013.01); *G06T 7/001* (2013.01); *G06T 7/90* (2017.01); *G06T 2207/10024* (2013.01); *H04N 2005/2255* (2013.01)

(58) **Field of Classification Search**
CPC H04N 7/18; H04N 5/23203; H04N 2005/2255; E04H 4/1654; G06T 7/001; G06T 7/90; G06T 2207/10024
USPC 348/114
See application file for complete search history.

(56) **References Cited**

U.S. PATENT DOCUMENTS

5,507,058	A	4/1996	Minami et al.	
5,613,261	A	3/1997	Kawakami et al.	
5,886,630	A	3/1999	Menoud	
7,123,746	B2	10/2006	Meniere et al.	
7,362,351	B2 *	4/2008	Meniere	G01V 8/10 348/135
7,398,138	B2	7/2008	Emery et al.	
7,993,600	B2	8/2011	Doyle et al.	
8,007,653	B2	8/2011	Porat	
8,043,070	B2	10/2011	Stiles, Jr. et al.	
9,388,595	B2	7/2016	Durvasula et al.	
9,995,051	B2	6/2018	Durvasula et al.	
10,338,599	B2	7/2019	Durvasula et al.	
10,739,785	B2	8/2020	Durvasula et al.	
2002/0097322	A1	7/2002	Monroe et al.	
2004/0025268	A1	2/2004	Porat et al.	
2004/0040581	A1	3/2004	Bruwer	
2007/0094817	A1	5/2007	Stoltz et al.	
2010/0299016	A1	11/2010	Benzler et al.	
2011/0049023	A1 *	3/2011	Hui	E04H 4/1654 210/91
2011/0091329	A1	4/2011	Stiles, Jr. et al.	
2011/0290707	A1 *	12/2011	Porat	C02F 1/4674 210/96.1
2011/0301752	A1	12/2011	Finezilber	
2013/0151061	A1	6/2013	Hong et al.	
2013/0152970	A1	6/2013	Porat	
2013/0269097	A1	10/2013	Alammari	
2014/0009748	A1	1/2014	Leonessa et al.	

FOREIGN PATENT DOCUMENTS

EP	0811432		12/1997	
JP	6162905		3/1986	
WO	2004019295		3/2004	
WO	2009031361		3/2009	
WO	2012023676		2/2012	
WO	WO 2012023676	A1 *	2/2012	E04H 4/16

OTHER PUBLICATIONS

U.S. Appl. No. 13/545,918, Non-Final Office Action dated Jun. 26, 2015, 17 pages.
U.S. Appl. No. 13/545,918 Notice of Allowability dated Mar. 9, 2016, 8 pages.
U.S. Appl. No. 13/545,918, Notice of Allowance dated Dec. 31, 2015, 8 pages.
U.S. Appl. No. 15/207,065, Non-Final Office Action dated Nov. 6, 2017, 10 pages.
U.S. Appl. No. 15/207,065, Notice of Allowance dated Feb. 23, 2018, 9 pages.
U.S. Appl. No. 15/973,983, Non-Final Office Action dated Nov. 6, 2018, 7 pages.
U.S. Appl. No. 15/973,983, Notice of Allowance dated Mar. 4, 2019, 9 pages.
U.S. Appl. No. 16/416,840, Non-Final Office Action dated Feb. 28, 2020, 7 pages.
U.S. Appl. No. 16/416,840, Non-Final Office Action dated Jan. 15, 2020, 9 pages.
U.S. Appl. No. 16/416,840, Notice of Allowability dated Jun. 30, 2020, 2 pages.
U.S. Appl. No. 16/416,840, Notice of Allowance dated Apr. 29, 2020, 9 pages.
Spanish Application No. ES2527883, Response to Substantive Examination dated May 5, 2016.
Spanish Application No. P201331047, Search Report dated Feb. 3, 2015, 1 page.

* cited by examiner

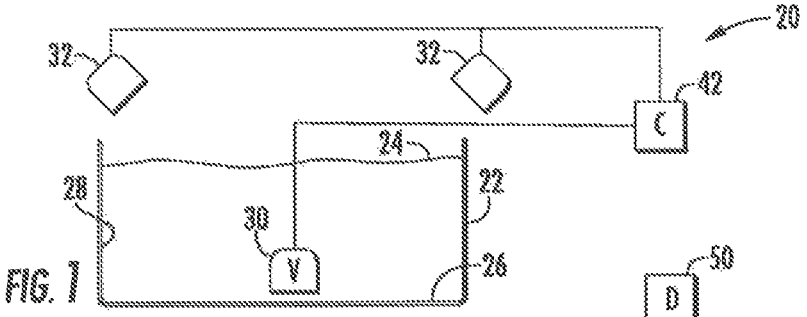

FIG. 1

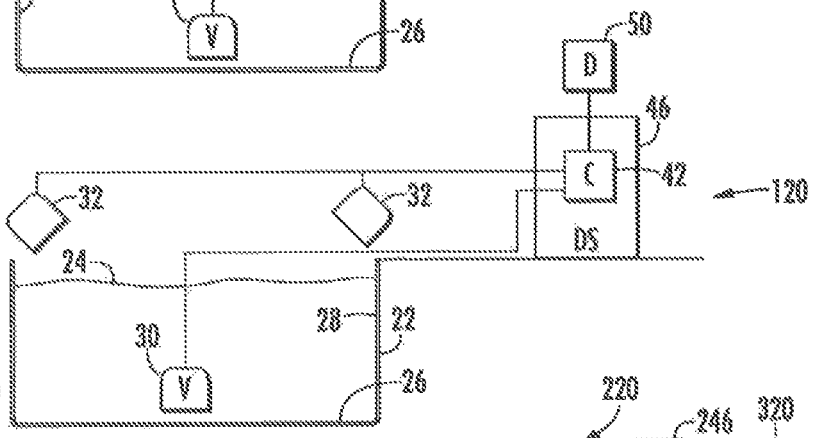

FIG. 2

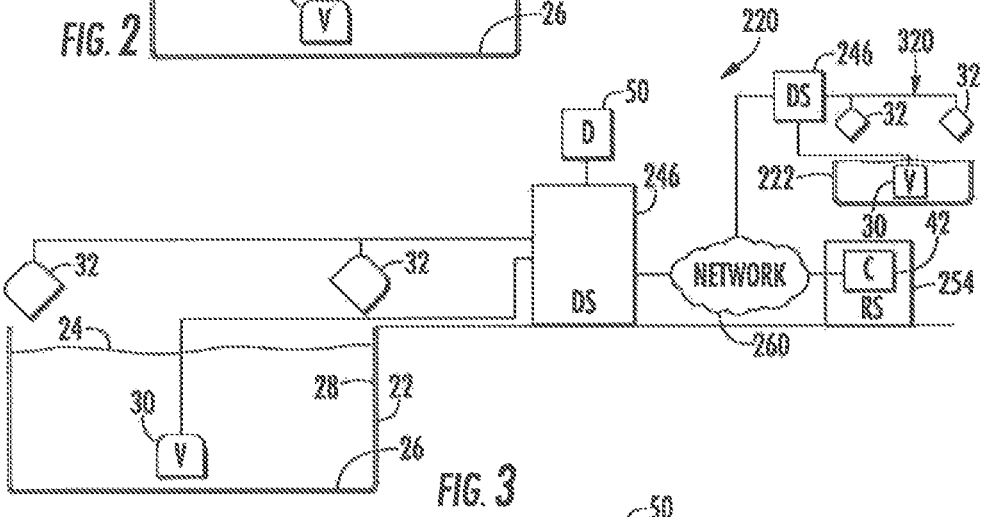

FIG. 3

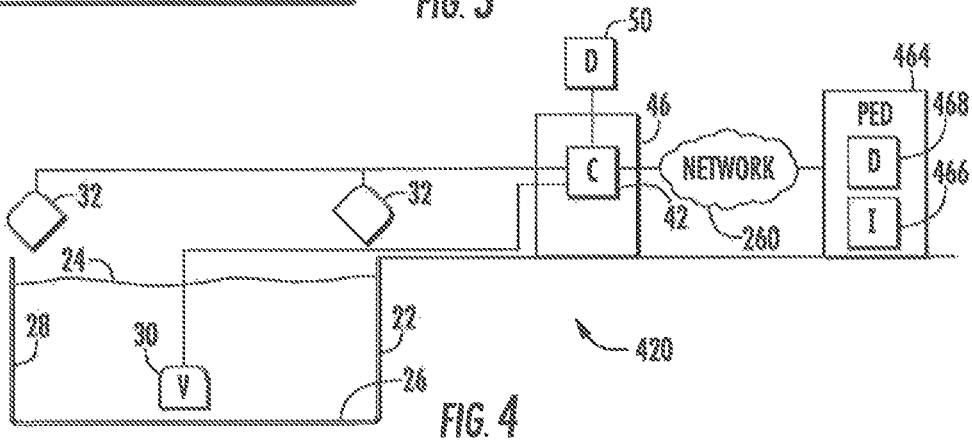

FIG. 4

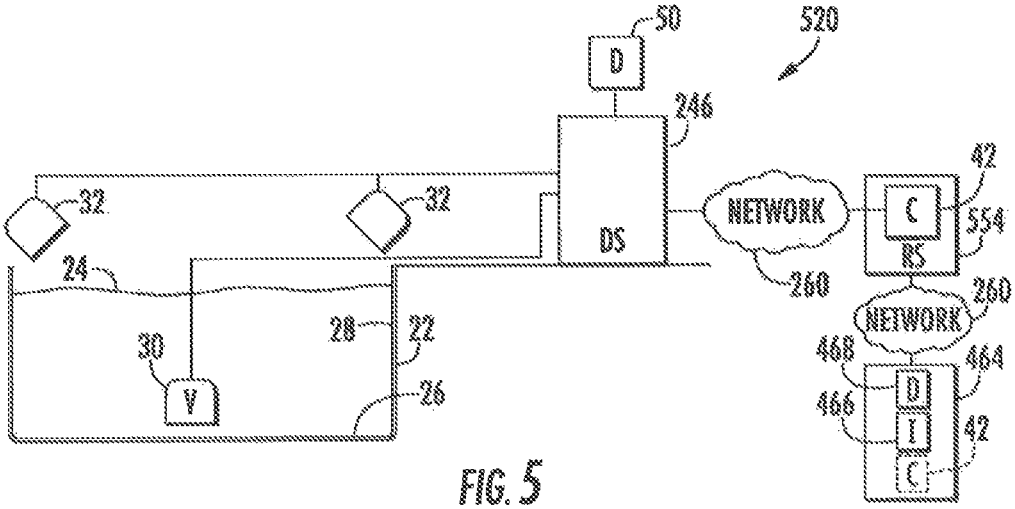

FIG. 5

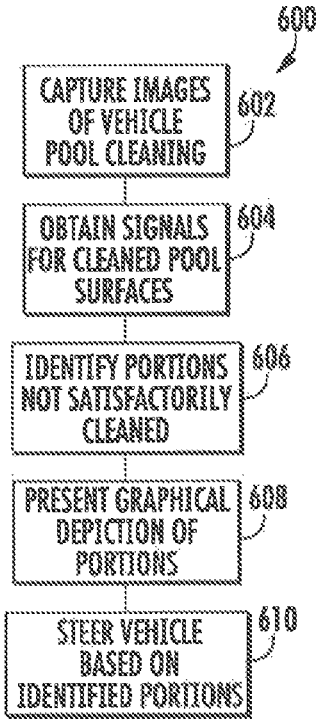

FIG. 6

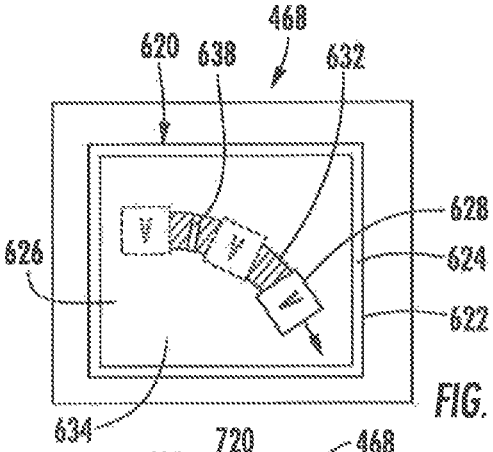

FIG. 7

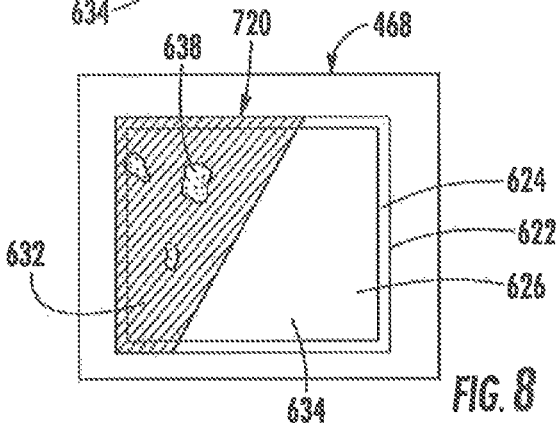

FIG. 8

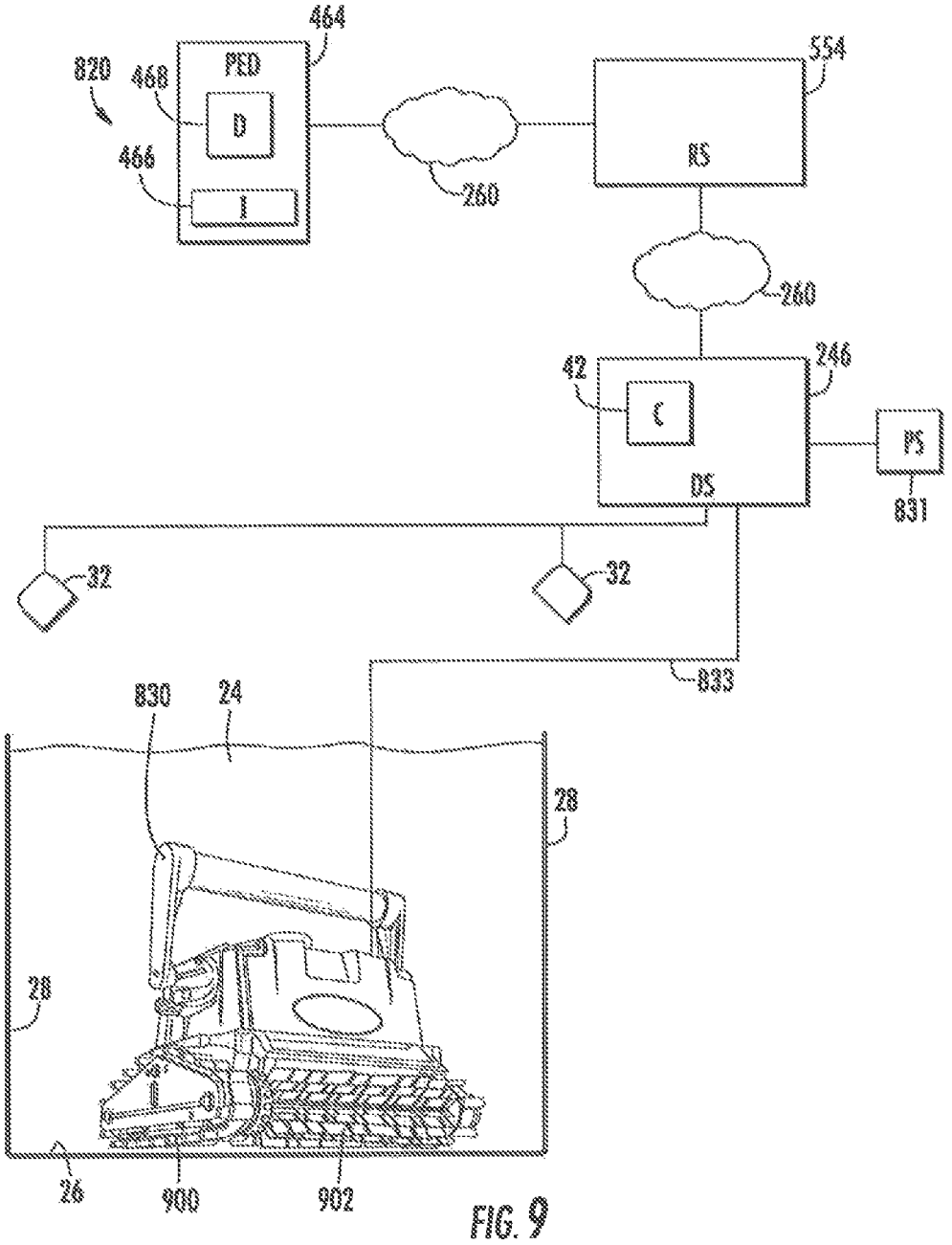
464
PED
820
468
D
466
I
260
554
RS
260
42
246
C
DS
PS
831
32
32
833
830
24
28
28
26
900
902

FIG. 9

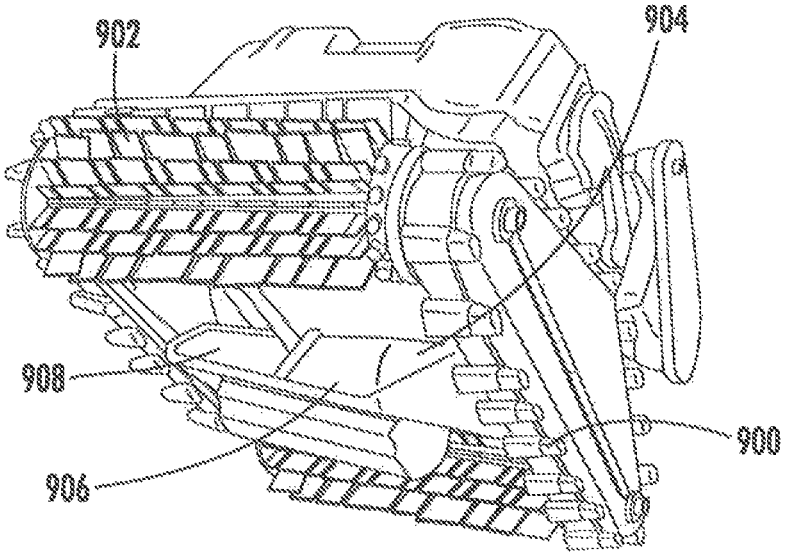

FIG. 10

POOL CLEANING SYSTEM AND METHOD TO AUTOMATICALLY CLEAN SURFACES OF A POOL USING IMAGES FROM A CAMERA

CROSS-REFERENCE TO RELATED APPLICATION

This application is a continuation of U.S. patent application Ser. No. 16/416,840, filed May 20, 2019 (now allowed), which is a continuation of U.S. patent application Ser. No. 15/973,983, filed May 8, 2018 (now U.S. Pat. No. 10,338,599), which is a continuation of U.S. patent application Ser. No. 15/207,065, filed Jul. 11, 2016 (now U.S. Pat. No. 9,995,051), which is a continuation of U.S. patent application Ser. No. 13/545,918, filed Jul. 10, 2012 (now U.S. Pat. No. 9,388,595), the contents of all of which are incorporated herein by reference in their entireties.

BACKGROUND

Manually cleaning the floor and sides of a swimming pool may be a tedious and time-consuming task. As a result, automated robotic pool cleaners have been developed. However, controlling and monitoring such automated robotic pool cleaners to insure that all portions of the pool surfaces are satisfactorily cleaned remains a challenge.

SUMMARY OF THE INVENTION

The disadvantages heretofore associated with the prior art are overcome by the present invention of a pool cleaning system for cleaning debris from a submerged surface of a swimming pool comprising: a self-propelled pool cleaner having rotatably-mounted supports for supporting and guiding the cleaner on the pool surface; a filter configured to retain the debris collected from the submerged surface of the swimming pool; an electric motor for enabling the rotation of the rotatably-mounted supports on the pool surface; at least one camera to capture imagery of the pool surface; a controller, in electronic communication with the at least one camera, to determine a cleanliness characteristic of the pool surface on which the cleaner has passed based on the camera imagery and generate a control signal to direct movement of the cleaner based on the cleanliness characteristic of the pool surface; and a portable electronic device is configured to present a graphic on a display, the graphic depicting the submerged surface of the pool and those portions of the surface that remain uncleaned as the cleaner traverses the pool surface.

In one aspect, the at least one camera is carried by the cleaner. In another aspect, the controller is carried by the cleaner. In still another aspect, the electric motor is mechanically connected to at least one of the rotatably-mounted supports.

In yet another aspect, the controller is operable to execute one or more cleaning programs for cleaning the submerged surfaces of the pool. In one aspect, the control signal causes the cleaner to drive in a direction to clean a portion of the pool surface based on the cleanliness characteristic of the pool surface. Alternatively, the control signal causes the cleaner to steer in a direction to clean a portion of the pool surface based on the cleanliness characteristic of the pool surface. In another aspect, the control signal causes the cleaner to drive in a direction to re-clean a portion of the pool surface over which the cleaner has passed. Alternatively, the control signal causes the cleaner to steer in a direction to re-clean a portion of the pool surface over which the cleaner has passed.

In one aspect, the captured imagery from the at least one camera is digitally processed by the controller to determine the cleanliness characteristic of the pool surface. Alternatively, the captured imagery from the at least one camera is digitally processed by a remote processor to determine the cleanliness characteristic of the pool surface.

In another aspect, the system further comprises a dry station located remotely from the cleaner and in communication with the cleaner, wherein the dry station includes the controller. Alternatively, the system further comprises a dry station located remotely from the cleaner and in communication with the cleaner, wherein the controller is located remotely from the cleaner and the dry station. In still another aspect, the controller controls electric power provided to the electric motor.

In one aspect, the control signal causes the cleaner to move in a direction of a portion of the pool surface to be cleaned based solely upon signals received from the camera. In another aspect, the control signal causes the cleaner to drive in a direction to clean a portion of the pool surface based on the cleanliness characteristic of the pool surface. Alternatively, the control signal causes the cleaner to steer in a direction to clean a portion of the pool surface based on the cleanliness characteristic of the pool surface. In yet another aspect, the control signal causes the cleaner to drive in a direction to re-clean a portion of the pool surface over which the cleaner has passed. Alternatively, the control signal causes the cleaner to steer in a direction to re-clean a portion of the pool surface over which the cleaner has passed.

BRIEF DESCRIPTION OF THE DRAWINGS

FIG. **1** is a schematic illustration of an example pool cleaning system.

FIG. **2** is a schematic illustration of an implementation of the pool cleaning system of FIG. **1**.

FIG. **3** is a schematic illustration of an implementation of the pool cleaning system of FIG. **1**.

FIG. **4** is a schematic illustration of an implementation of the pool cleaning system of FIG. **1**.

FIG. **5** is a schematic illustration of an implementation of the pool cleaning system of FIG. **1**.

FIG. **6** is a flow diagram of an example method that may be carried out with the pool cleaning system of FIG. **2-5**.

FIG. **7** is a plan view of an example display with an example graphical depiction.

FIG. **8** is a plan view of another example display with an example graphical depiction.

FIG. **9** is a schematic illustration of an implementation of the pool cleaning system of FIG. **1** with an example pool cleaning vehicle.

FIG. **10** is a bottom perspective view of the example pool cleaning vehicle of the system of FIG. **9**.

DETAILED DESCRIPTION OF THE EXAMPLE EMBODIMENTS

FIG. **1** schematically illustrates an example pool cleaning system **20**. As schematically shown by FIG. **1**, pool cleaning system **20** is adapted to clean submerged surfaces of a pool **22** containing a liquid **24**. In particular, pool cleaning system **20** is adapted to clean at least a bottom or floor surface **26** of the pool **22** and possibly to additionally clean surfaces **28** of pool **22**. As will be described hereafter, pool cleaning

system facilitates the control and monitoring of a robotic pool cleaner to better assure that all portions of pool **22** are satisfactorily cleaned.

Pool cleaning system **20** comprises vehicle **30**, cameras **32** and controller **42**. Vehicle **30** comprises an automated powered device configured to travel adjacent to submerged or water containing surfaces of pool **20** (such as floor **26** and/or side surfaces **28**) while cleaning such surfaces. In one implementation, vehicle **30** may include vacuum or suction devices, a liquid circulation system and a filter to draw debris, such as bacterial growth or plant growth, from such pool surfaces, wherein the drawn liquid containing such residue or foreign matter is filtered to collect the debris. In other implementations, vehicle **30** may not collect such debris, wherein vehicle **30** merely loosens such debris on the pool surfaces such that the loosened or separated debris may be subsequently removed using the existing liquid filtering system of pool **22**.

To assist in the loosening of debris, in one implementation, vehicle **30** may additionally include a chemical dispenser to closely apply pool cleaning chemicals to the pool surfaces as the vehicle **30** traverses such surfaces. In one implementation, vehicle **30** may additionally or alternatively include one or more scrubbing members, such as active (driven) or passive (undriven or idling) brushes, to assist in the removal of residue or foreign matter from such pool surfaces. In yet another implementation, vehicle **30** may additionally or alternatively include liquid jets to assist in the loosening of debris.

To move along the submerged surfaces of pool **22**, vehicle **30** includes one or more propulsion mechanisms. In one implementation, vehicle **30** is propelled along the submerged pool surfaces using wheels, rollers, tracks or other surface contacting members powered by a motor and the like. Such wheels, rollers or tracks may themselves include the scrubbing members used to clean the surfaces. In one implementation vehicle **30** may also alternatively be propelled by means of the vacuum or liquid jets. The vacuum or liquid jets used for such propulsion nozzle facilitate loosening of debris for collection by vehicle **30**. In other implementations, vehicle **30** may include other propulsion mechanisms.

Cameras **32** comprise devices configured to capture video or time lapse images of pool **22**. In the example illustrated, cameras **32** are mounted on structures external to pool **22**. In other words, cameras **32** are not submerged. In other implementations, cameras **32** may alternatively be mounted to vehicle **30**. In the example illustrated, cameras **32** capture movement of vehicle **30** while vehicle **30** is submerged within pool **22**. In other implementations, cameras **32** merely capture images of submerged surfaces **26**, **28** of pool **22**.

In the example illustrated, cameras **32** comprise cameras serving as part of a home or pool security system, wherein such cameras detect the presence of a person at pool **22** satisfying a predefined characteristic and wherein an alert is output upon the person's detected presence. For example, in one implementation, cameras **32** are utilized as part of a security system that detects when a person below a predefined age, such as a child, is present at pool **22** without a detected presence of a recognized adult. In another implementation, cameras **32** may detect the presence of an unauthorized person or intruder at pool **22**. Identification of the person may be achieved by an off-site human or computerized monitoring system, wherein signals from cameras **32** are transmitted across a wide area network or may be achieved with software of controller **42** which includes facial recognition or other identification programming.

Because pool cleaning system **20** utilizes pre-existing cameras **32** provided as part of a security system or shares the use of cameras **32** with such a home or pool security system, pool cleaning system **20** is easier to set up, less complex and less expensive. In other implementations, pool cleaning system **20** may utilize dedicated cameras **22** independent of any cameras associated with a home, facility or pool security system. In such an alternative system, cameras **32** may be more precisely focused upon pool **22** and surfaces **26**, **28** while also including appropriate lenses or modifications to account for glare, refraction and the like to better facilitate the capture of surfaces and vehicle **30** which are submerged.

Controller **42** comprises one or more processing units in communication with vehicle **30** and cameras **32**. For purposes of this application, the term "processing unit" shall mean a presently developed or future developed processing unit that executes sequences of instructions contained in a memory. Execution of the sequences of instructions causes the processing unit to perform steps such as generating control signals. The instructions may be loaded in a random access memory (RAM) for execution by the processing unit from a read only memory (ROM), a mass storage device, or some other persistent storage. In other embodiments, hard wired circuitry may be used in place of or in combination with software instructions to implement the functions described. For example, controller **42** may be embodied as part of one or more application-specific integrated circuits (ASICs). Unless otherwise specifically noted, the controller is not limited to any specific combination of hardware circuitry and software, nor to any particular source for the instructions executed by the processing unit.

In one implementation, controller **42** communicates with vehicle **30** and cameras **32** entirely across a wired connection. In another implementation, controller **42** communicates with vehicle **30** and cameras **32** across a wireless connection, such as cross a local area network (LAN) or a wide area network (WAN) such as the Internet. One of limitation, controller **42** may communicate with vehicle **30** and cameras **32** using a combination of both wired and wireless communication connections.

Controller **42** is configured to generate control signals for steering vehicle **30** based upon signals received from cameras **32**. In one implementation, controller **42** provides the sole steering directions for vehicle **30** using signals from cameras **32**. Because vehicle **30** is precisely steered under the control of controller **42**, rather than traveling in a random manner, entire summer surfaces of pool **22** may be more quickly and efficiently covered and cleaned. Because controller **42** provides the only steering instructions for vehicle **30** and utilizes signals from cameras **32**, complex steering algorithms or codes in either vehicle **30** or controller **42** may be omitted to reduce complexity and cost of system **20**.

In another implementation, vehicle **30** may cover or travel across surfaces of pool **22** in either a random fashion or according to an automated pool coverage algorithm or pool coverage pattern stored in a memory associated with vehicle **30** or controller **42**. In such an implementation, controller **42** utilizes signals from cameras **32** to verify that all of the surfaces of pool **22** have been cleaned, that no spots have been missed. Upon identifying a missed spot, controller **42** utilizes signals from camera **32** to steer vehicle **32** over such missed portions of surfaces **26**, **28**. According to one example, controller **42** not only uses signals from camera **32** to determine whether any portions of surfaces **26**, **28** have

been missed entirely, but to also determine whether any portions of surfaces **26**,**28** have been cleaned, but not to a satisfactory degree or extent. In such circumstances, controller **42** uses signals from cameras **32** to steer vehicle **34** such areas to re-clean such portions until such portions have been satisfactorily cleaned such that the portions have a cleanliness characteristic satisfying a predefined threshold.

FIG. **2** schematically illustrates pool cleaning system **120**, the particular example of pool cleaning system **20** described above. Pool cleaning system **120** is similar to pool cleaning system **20** except that pool cleaning system **120** additionally comprises dry station **46** and display **50**. Those remaining components of pool cleaning system **120** which correspond to components of pool cleaning system **20** are numbered similarly.

Dry station **46** comprises a station in communication with vehicle **30** and cameras **32** outside of pool **22**. Dry station **46** incorporates controller **42**. In one implementation, dry station **46** communicates with vehicle **30** in a wired fashion. In such an implementation, dry station **46** further provides electrical power to vehicle **30** in a wired fashion. Dry station **46** communicates with cameras **32** and either a wired or wireless fashion.

Display **50** comprises a device to present a graphical images and text on a display screen. In one implementation, display **58** may be incorporated as part of dry station **46**. In another implementation, display **50** may be provided on a portable electronic device, a computer, a television and the like. Display **50** is utilized by pool cleaning system **120** to present information regarding the cleaning of pool **22** to facilitate control of vehicle **30** by controller **42**. In one implementation, display **50** is utilized by pool cleaning system **120** and a controller **42** to present a graphical depiction of those portions of surfaces **26**, **28** of pool **22** have not been satisfactorily cleaned so as to satisfy a predefined cleanliness characteristic threshold. Such portions may comprise portions that have been completely missed by vehicle **30** as well as those portions that have been covered by vehicle **30** but have not been satisfactorily cleaned with the given number of passes of vehicle **30** or the existing cleaning settings of vehicle **30**. The graphical depiction presented on display **50** enables a person view the quality of the prior cleaning session and to input commands causing controller **42** to generate control signals using signals from camera **32** to steer vehicle **30** back to such identified portions where such portions may be cleaned at the same or elevated cleaning aggressiveness settings.

Another implementation, display **50** may be further utilized by controller **42** to depict the progress of vehicle **30** in cleaning pool **22**. Such a display **50** allows a person to visually determine how much of the pool has been currently cleaned and to estimate the remaining time before the pool cleaning task is completed. In certain circumstances, using display **50**, a person may adjust a setting of vehicle **30** to accelerate a rate at which surfaces **26**, **20** of pool **22** are cleaned to meet an earlier desired completion time for such pool cleaning.

FIG. **3** schematically illustrates pool cleaning system **220**, another example implementation of pool cleaning system **20**. Pool cleaning system **220** is similar to pool cleaning system **20** except that pool cleaning system **220** additionally comprises dry station **246**, display **50**, and remote server **254**. Those remaining components of pool cleaning system **220** which correspond to components of pool cleaning system **20** or pool cleaning system **120** are numbered similarly.

Dry station **246** is similar to dry station **46**, described above, except that dry station **246** serves as a local interface for communication with controller **42** across a network **260**. In one implementation, network **260** may comprise a local area network. In another implementation, network **260** may comprise a wide area network, such as the Internet. For example, in one implementation, dry station **246** may incorporate a modem. In one implementation, dry station **246** may communicate across a local area network to controller **42**. In another implementation, dry station **246** may communicate through a router, across a local area network, to a local modem which communicates across a network **260**. The example illustrated, dry station **246** further provides part of vehicle **30** across a wired cable or wired connection. Display **50** is described above with respect to system **120**.

Remote server **254** comprises a server remote from dry station **246** which is in communication with dry station **246** across network **260**. Remote server **254** includes controller **42**. During operation, signals from cameras **32** are transmitted across dry station **246** across network **260** to controller **42** of remote server **254**. Based upon such signals from cameras **32**, controller **42** generates control signals which are transmitted back across network **260** and through dry station **246** to vehicle **30** to steer vehicle **30**.

As shown by FIG. **3**, remote server **254** and network **260** may be shared as part of other pool cleaning systems **320**, wherein controller **42** generates control signals for steering the pool cleaning vehicle **30** of system **320** based upon signals from cameras **32** transmitted across dry station **246** of system **320**. In such an implementation, the cost and complexity of pool cleaning system **220** is reduced since controller **42** is remotely provided at remote server **254** which services multiple pool cleaning systems **220**,**320**. Upgrades to controller **42** and its software are also more easily achieved for all pool cleaning systems to **20**, **320** and their pools **22**, **222** being serviced. In one implementation, the supervised cleaning, inspection and possible re-cleaning facilitated by the use of cameras **32** may be provided as part of a subscription to users of vehicle **30**. In such an implementation, a pool **22** having security cameras **32** may be upgraded with appropriate software or an appropriate software module added to dry station **246** to make a network connection with controller **42** which directs the security cameras **32** to capture vehicle **30** utilizes such signals for steering vehicle **30**.

FIG. **4** schematically illustrates pool cleaning system **420**, another particular implementation of pool cleaning system **20**. Pool cleaning system **420** is similar to pool cleaning system **120** except that pool cleaning system **420** additionally comprises a portable electronic device **464**. Those remaining components of pool cleaning system **420** which correspond to components of pool cleaning system **120** are numbered similarly.

Portable electronic device **464** comprises a portable handheld electronic device in communication with controller **42** and/or dry station **46** across network **260**. Examples of such a portable electronic device (PED) **300** include, but are not limited to, a smart phone, a personal data assistant (PDA), laptop, notebook computer, tablet computer (e.g. IPAD) and MP3 player (e.g., IPOD TOUCH). In the example illustrated, PED **464** comprises input **466** and display **468**.

Input **466** serves as a user interface for PED **464** by which inputs are made to PED **464**. Input **466** facilitates entry of inputs or commands by a person to cause controller **42** to generate control signals varying the control of vehicle **30**. In one implementation, input **466** comprise a keyboard in other implementations, input **466** may comprise a touchpad, a

stylus, a microphone with associated speech recognition software or programming, a touch screen, buttons, switches and the like. In some implementations, input **466** may comprise a touch screen incorporated as part of display **468**.

Display **468** comprises a user interface by which graphical or textual data is presented to a user. Display **468** may present the same or similar information as presented at dry station **246** by display **50** as described above. In one implementation, display **468** comprises a liquid crystal display. In other implementations, display **468** may comprise other types of display technology such as a light emitting diode display, an organic light emitting diode display (OLED), an electronic ink (e-ink) display or other types of display technology in present use or developed in the future. Although system **420** is illustrated as including controller **422** is part of dry station **46**, in some implementations, controller **42** may alternatively be located as part of PED **464**.

PED **464** enables a person located remote from pool **22** to monitor the progress of the cleaning of pool **22** by vehicle **30** of system **420**. PED **464** provides a person with a graphical presentation (described above with respect to display **50**) indicating those portions of surfaces **26**, **28** of pool **22** that have been completed as well as those portions **26**, **20** and that remain to be cleaned. The person may also be provided with a graphical indication of what portions need to be re-cleaned to meet predetermined cleanliness thresholds. In the example illustrated, input **466** enables a person to enter commands or selections which are transmitted across network **260** to controller **42** to adjust operation of vehicle **30**. For example, the path or route of vehicle **30** may be changed, the aggressiveness of the cleaning chemicals or mechanical cleaning devices may be adjusted, the speed at which vehicle **30** traverses surfaces **26**, **28** may be adjusted. In response to such adjustment signals from PED **464**, controller **42** may utilize signals from cameras **32** to adjust the steering of vehicle **30**.

FIG. **5** schematically illustrates pool cleaning system **520**, another example implementation of pool cleaning system **20**. Pool cleaning system **520** is similar to pool cleaning system **420** except that pool cleaning system **520** additionally comprises a remote server **554**. Those remaining components of pool cleaning system **520** which correspond to components of pool cleaning system **420** are numbered similarly.

Remote server **554** is similar to remote server **254** described above with respect to system **220**. Remote server **554** comprises a server remote from dry station **246** which is in communication with dry station **246** across network **260**. Remote server **254** includes controller **42**. During operation, signals from cameras **32** are transmitted across dry station **246** across network **260** to controller **42** of remote server **254**. Based upon such signals from cameras **32**, controller **42** generates control signals which are transmitted back across network **260** and through dry station **246** to vehicle **30** to steer vehicle **30**. Controller **42** further relays either the raw signals from camera **32** or image signals generated based upon signals from cameras **32** to PED **464**, wherein such images (described above) are presented on display **468**. As noted above, PED may further receive commands through input **466**, wherein such commands are transmitted to controller **42** which generates control signals that are ultimately transmitted to vehicle **30** for steering vehicle **30**.

As with remote server **254**, remote server **554** and network **260** may be shared as part of other pool cleaning systems **320** (shown in FIG. **3**), wherein controller **42** generates control signals for steering the pool cleaning vehicle **30** of system **320** based upon signals from cameras **32** transmitted across dry station **246** of system **320**. In such implementations, controller **42** of remote server **554** may interact with other PEDs **464**. In such an implementation, the cost and complexity of pool cleaning system **220** is reduced since controller **42** is remotely provided at remote server **254** which services multiple pool cleaning systems **220**, **320**. Upgrades to controller **42** and its software are also more easily achieved for all pool cleaning systems to **20**, **320** and their pools **22**, **222** being serviced. In one implementation, the supervised cleaning, inspection and possible re-cleaning facilitated by the use of cameras **32** may be provided as part of a subscription to users of vehicle **30**. In such an implementation, a pool **22** having security cameras **32** may be upgraded with appropriate software or an appropriate software module added to dry station **246** to make a network connection with controller **42** which directs the security cameras **32** to capture vehicle **30** utilizes such signals for steering vehicle **30**. As indicated by broken lines, in other implementations, the controller **42** for generating control signals steering vehicle **30** based upon signals from cameras **32** may alternatively be relocated in PED **464**.

FIG. **6** is a flow diagram illustrating an example method **600** that may be carried out by any of systems **120-520**. As indicated by step **602**, cameras **32** capture images of pool cleaning by vehicle **30**. As indicated by step **604**, controller **42** obtain such signals from cameras **32** for the surfaces of pool **22** that have been cleaned. As indicated by step **606**, controller **42** uses information gathered from the signals from cameras **32** to identify those portions of surfaces **26**, **28** not satisfactorily cleaned—not satisfying a predefined cleanliness characteristic or measurement threshold. One example of a cleanliness characteristic measurement a threshold may be how well the color of a surface matches a predetermined desirable color for the pool surface (such as original color of the tile or surface). A surface that has been missed entirely by vehicle **30** during a pool cleaning session may be automatically deemed to not satisfy a predetermined cleanliness characteristic.

As indicated by step **608**, based upon such determinations, controller **42** generates control signals resulting in the presentation of a graphical depiction of those portions of pool **22** that has not been satisfactorily cleaned. Such graphical representations or depictions may be presented on display **50** or display **468**. FIGS. **7** and **8** illustrate examples of graphical depictions that may be presented.

FIG. **7** illustrates display **468** presenting graphical depiction **620**. Graphical depiction **620** comprises a first graphic **622** having a first portion **624** representing sides or walls **28** of pool **22** and a second portion **626** representing the floor **26** of pool **22**. Graphical depiction **620** further comprises a moving icon **628** representing the current positioning of vehicle **30**. In one implementation, the path of vehicle **30** may additionally be depicted by icon **628** shown in broken lines. As shown by FIG. **7**, those portions **632** of surfaces **26**, **28** of pool **22** (shown in FIG. **1**) over which of vehicle **30** has moved are identified by graphical depiction **620** either by color, markings or other various distinctive attributes. Likewise, those portions **634** of surfaces **26**, **28** of pool **22** that have not been covered by vehicle **30** are identified by a distinct color col marking or distinctive attribute of depiction **620**. As a result, a person may view the current position of vehicle **30**, the extent to which pool **22** has been cleaned or covered by vehicle **30** and the extent of pool **22** that remains to be cleaned. In the example illustrated, depiction **620** further identifies those portions **638** of surfaces **26**, **28**

that have been cleaned, but which have not been cleaned to a satisfactory degree or extent. In one implementation, portions **638** may be identified by colors, brightness, markings or other visually distinctive attributes that are visually distinct from both portions **632** and portions **634**. In other implementations, portions **638** may have the same characteristic of portions **634**. In yet other implementations, different portions **638** may have different visual attributes depending upon a degree to which such clean portions have failed to satisfy the predefined cleanliness characteristic threshold. In some implementations, different port **638** may have different visual attributes depending upon different cleaning strategies that may be recommended for the different portions **638**. For example, controller **42** may determine and recommend a first cleaning strategy (a first chemical solution jetted at a first rate and scrubbed at a first rate) with respect to a first portion **638** and may recommend a second different cleaning strategy (a second chemical solution jetted at a second rate is about a second rate) with respect to a second portion **638**, wherein the different cleaning strategies are represented by different visual attributes presented in depiction **620**.

FIG. **8** illustrates display **468** presenting a graphical depiction **720**. Graphical depiction **720** comprises a first graphic **622** having a first portion **624** representing sides or walls **28** of pool **22** and a second portion **626** representing the floor **26** of pool **22** (shown in FIG. **1**). Graphical depiction **720** is similar to graphical depiction **620** except that graphical depiction **720** omits icon **628** presenting vehicle **30**. Like depiction **620**, depiction **720** graphically depicts those portions **632** of surfaces **26**, **28** over which vehicle **30** has traveled while in a cleaning mode. Depiction **720** also visually depicts those portions **634** that have not been covered by vehicle **30** in the cleaning mode and those portions **638** over which vehicle **30** has traveled while in the cleaning mode, but which have not been cleaned to a satisfactory degree. As illustrated in FIG. **8**, different portions **638** may be visibly distinguished from one another through color, text or markings indicating either differences in the cleanliness of such portions **638** or indicating different recommended cleaning strategies or approaches that may be selected by a person using input **466** when vehicle **30** is steered back to such portions **638** for re-cleaning using signals from camera **32**.

As indicated by step **610** of FIG. **6**, controller **42** generates control signals steering vehicle **30** to re-clean portions of pool **22**, such as portions **638**. Such steering may be facilitated by using signals from cameras **32**. As noted above, in some implementations, a person may be allowed choose a cleaning approach for a particular portion **638** using input **466**. The selection may be facilitated by visual inspection of the different visual attributes for the particular portion **638** provided by depiction **720** (or depiction **620**). In some implementations, input **466** may additionally be utilized by a person to prioritize an order in which portions **638** are re-cleaned.

FIG. **9** illustrates pool cleaning system **820**, an example implementation of pool cleaning system **20**. Pool cleaning system **820** is similar to pool cleaning system **520** except the pool cleaning system **820** located controller **42** in dry station **246** and includes pool cleaning vehicle **830**, a specific example of vehicle **30**. As shown by FIG. **9**, in addition to transmitting control signals generated by controller **42** to vehicle **830**, dry station **246** further transmits power from power source **831** through a power line or power cable **833** to vehicle **830**. In the example illustrated, data communication and communication of control signals, also occurs across wired connections within or alongside the same line **833**. In the example illustrated, remote server **554** serves as a communication link by which upgrades to controller **42** may be implemented across a wide number of pool cleaning systems and by which information from controller **42** is conveyed to one or more portable electronic devices **464** across network **260**.

Vehicle **830** comprises a robotic or automated pool cleaning device. Vehicle **830** comprises a self-contained onboard filtration system with drive and pump motors. Vehicle **830** utilizes an internal microprocessor guided drive motor to systematically clean surfaces of pool **22**. As shown by FIGS. **9** and **10**, vehicle **830** utilizes a toothed track drive **900** provide traction and propulsion for vehicle **30**. Vehicle **830** comprises rotating brushes **902** to loosen waterline buildup and breakdown large debris while power washing jets **904** flush out dirt from pores, seems in corners where brushes **902** may not be able to reach. The loosened dirt and debris is vacuumed through off-center vacuum ports **906** which passes the vacuumed debris through internally house filter bag. In the example illustrated, vehicle **830** further comprises rollers **908** which inhibit vehicle **830** from becoming impeded or stuck on raised drains or pop-up heads. Although illustrated as being employed with system **820**, vehicle **830** may also be utilized with any of systems **20**, **120**, **220**, **320** and **420**. In other implementations, other robotic or automated pool cleaning vehicles may be utilized.

Although the present disclosure has been described with reference to example embodiments, workers skilled in the art will recognize that changes may be made in form and detail without departing from the spirit and scope of the claimed subject matter. For example, although different example embodiments may have been described as including one or more features providing one or more benefits, it is contemplated that the described features may be interchanged with one another or alternatively be combined with one another in the described example embodiments or in other alternative embodiments. Because the technology of the present disclosure is relatively complex, not all changes in the technology are foreseeable. The present disclosure described with reference to the example embodiments and set forth in the following claims is manifestly intended to be as broad as possible. For example, unless specifically otherwise noted, the claims reciting a single particular element also encompass a plurality of such particular elements.

What is claimed is:

1. A self-propelled pool cleaner for cleaning debris from a submerged surface of a swimming pool, comprising:

a. a vehicle body;

b. means for moving the vehicle body within the swimming pool;

c. a filter configured to retain debris collected from the submerged surface;

d. at least one camera positioned on or in the body for capturing an image of at least a first portion of the submerged surface; and

e. a controller (i) positioned on or in the body, (ii) in electronic communication with the at least one camera, and (iii) configured to generate, in response to the captured image, at least one control signal to cause movement of the body within the swimming pool to, or away from, the first portion of the submerged surface.

2. A system for cleaning debris from a submerged surface of a swimming pool, comprising:

a. a self-propelled pool cleaner comprising:
   i. a vehicle body;
   ii. means for moving the vehicle body within the swimming pool;
   iii. at least one camera positioned on or in the body for capturing an image of at least a first portion of the submerged surface; and
   iv. a controller (i) positioned on or in the body, (ii) in electronic communication with the at least one camera, and (iii) configured to generate, in response to the captured image, at least one control signal to cause movement of the body within the swimming pool to, or away from, the first portion of the submerged surface; and

b. a filter configured to retain debris collected from the submerged surface by the self-propelled pool cleaner.

3. A system for cleaning debris from a submerged surface of a swimming pool, comprising:

a. a self-propelled pool cleaner comprising:
   i. a vehicle body;
   ii. means for moving the vehicle body within the swimming pool;
   iii. a filter configured to retain debris collected from the submerged surface; and
   iv. at least one camera positioned on or in the body for capturing an image of at least a first portion of the submerged surface; and

b. a controller (i) in electronic communication with the at least one camera and (ii) configured to generate, in response to the captured image, at least one control signal to cause movement of the body within the swimming pool to, or away from, the first portion of the submerged surface.

* * * * *