US005351355A

# United States Patent [19]

Chiniara

[11] Patent Number: 5,351,355

[45] Date of Patent: Oct. 4, 1994

[54] SWIMMING POOL CLEANER

[76] Inventor: **Paul Chiniara,** 9044 Rimouski, Brossard, Quebec, Canada, J4X 2S2

[21] Appl. No.: **67,281**

[22] Filed: **May 26, 1993**

[51] **Int. Cl.**[5] ..... **E04H 3/20**

[52] **U.S. Cl.** ..... **15/1.7**

[58] **Field of Search** ..... 15/1.7

[56] **References Cited**

U.S. PATENT DOCUMENTS

2,988,762 6/1961 Babcock ..... 15/1.7

3,416,176 12/1968 Ravitts ..... 15/1.7

FOREIGN PATENT DOCUMENTS

446008 7/1912 France ..... 15/1.7

*Primary Examiner*—Edward L. Roberts

*Attorney, Agent, or Firm*—George A. Seaby

[57] **ABSTRACT**

The majority of currently available, submersible swimming pool cleaners operate in a random manner, i.e. follow no set path of travel along the bottom of a swimming pool. The result is that a lengthy period of time and large power consumption are required to clean an entire swimming pool. This problem is solved by a swimming pool cleaner of the submersible type including a casing which tapers from one end to the other thereof, a pair of wheels at the wide end of the casing, a single wheel at the narrow end of the casing, a drive system for driving each of the wheels, a cable for connecting the cleaner to a fixed point on one side of the pool, a cable tensioning device in the casing for changing the length and tension on the cable whereby the cleaner is caused to follow a predetermined path of travel over the entire inside area of the swimming pool.

**6 Claims, 7 Drawing Sheets**

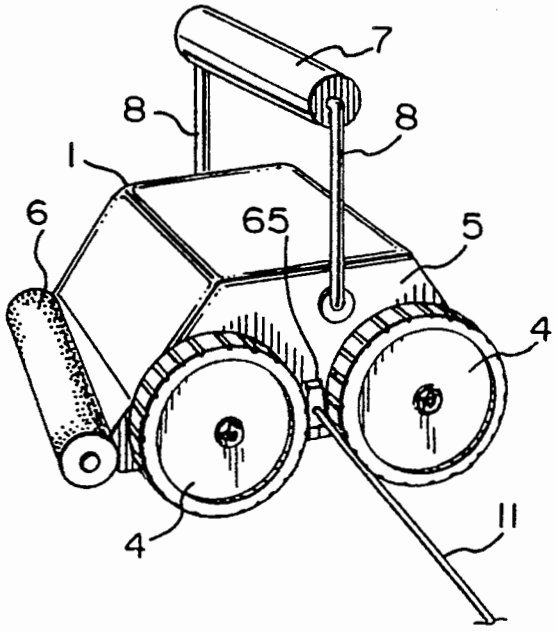

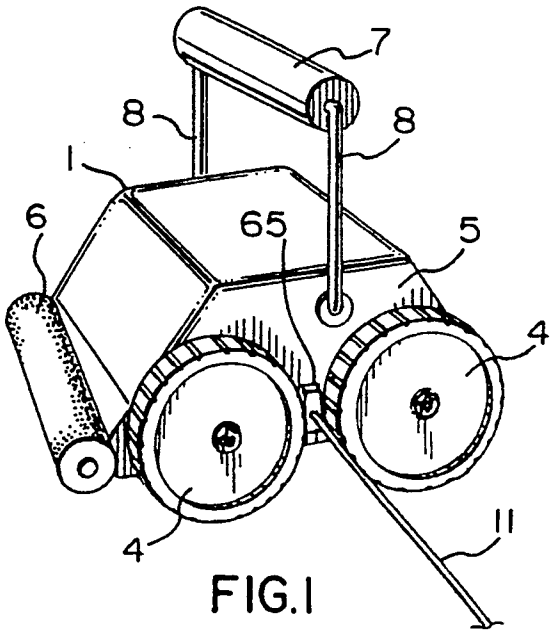


FIG.1

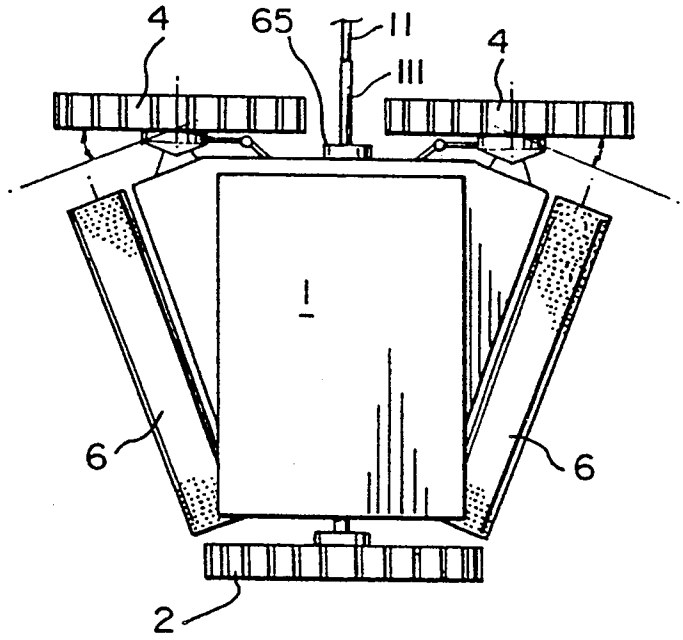


FIG.2

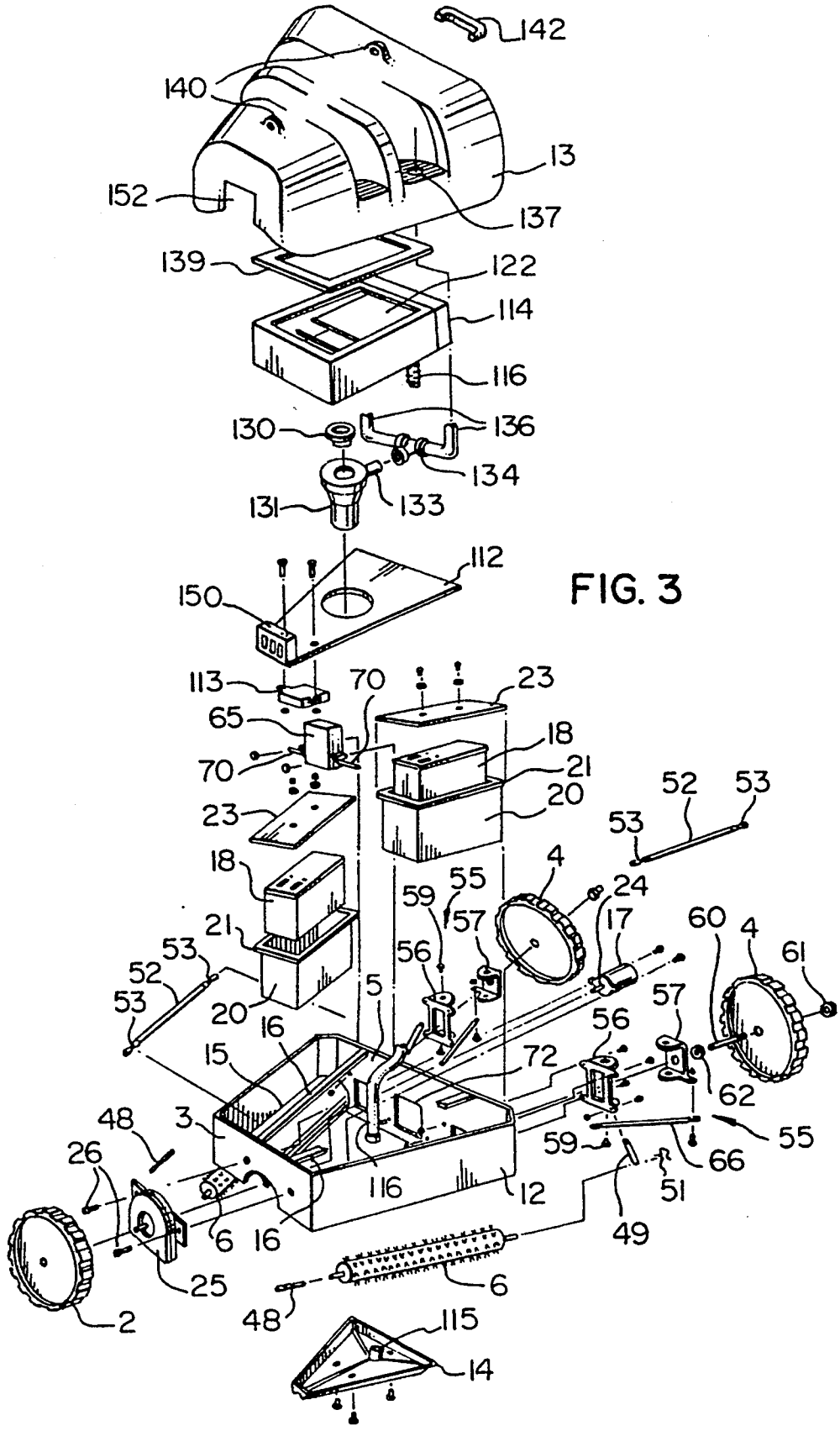
142
140
13
152
137
139
122
114
116
130
136
134
131
133
112
150
113
70
23
65
18
70
21
20
23
52
53
53
18
4
55
24
59
57
17
60
4
61
21
53
56
52
53
20
5
57
16
56
15
72
62
48
3
55
26
59
66
116
12
51
6
16
49
25
6
2
48
115
14

FIG. 3

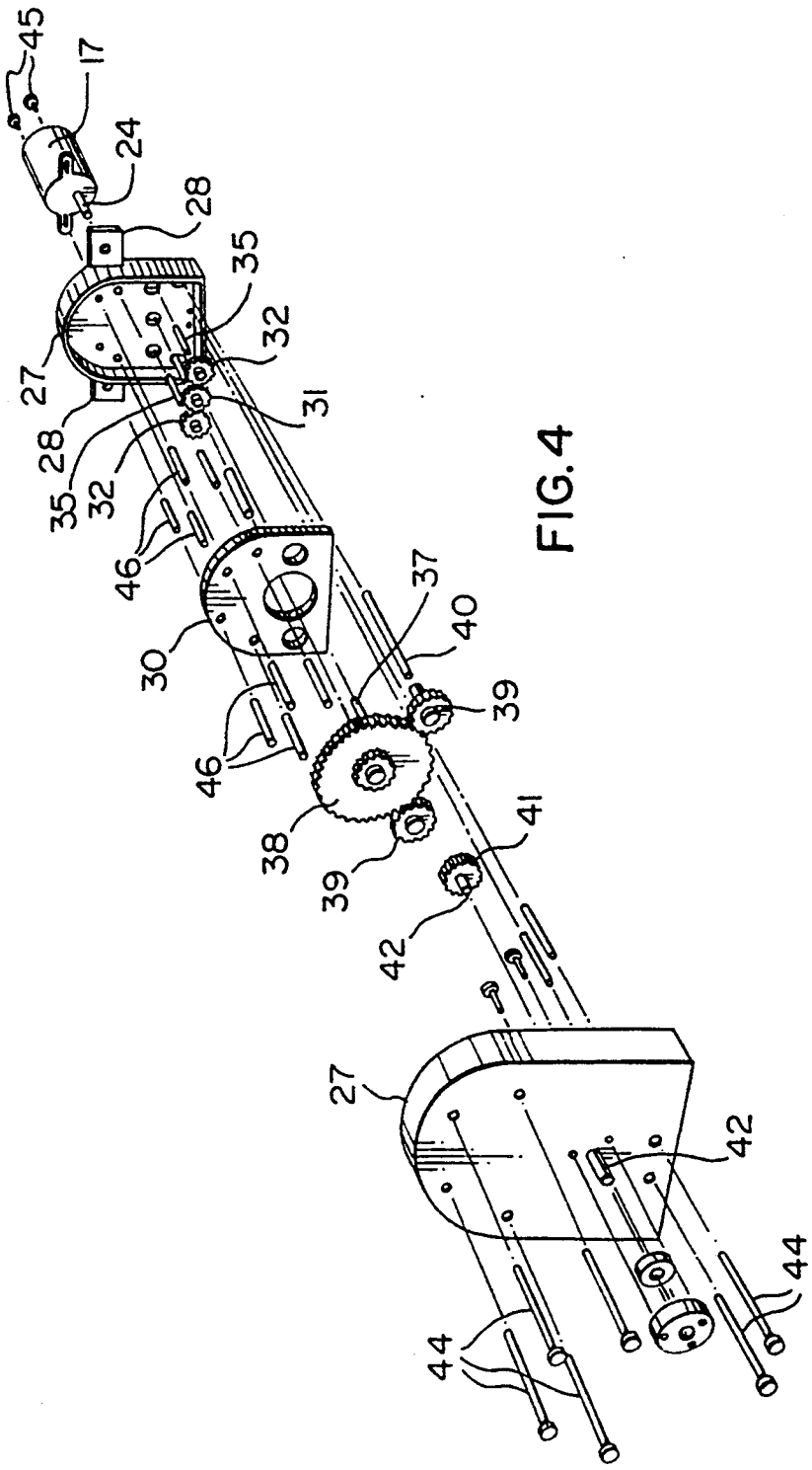
45
17
24
28
35
32
27
31
28
35
32
46
30
37
40
39
46
38
39
41
42
27
42
44
44

FIG. 4

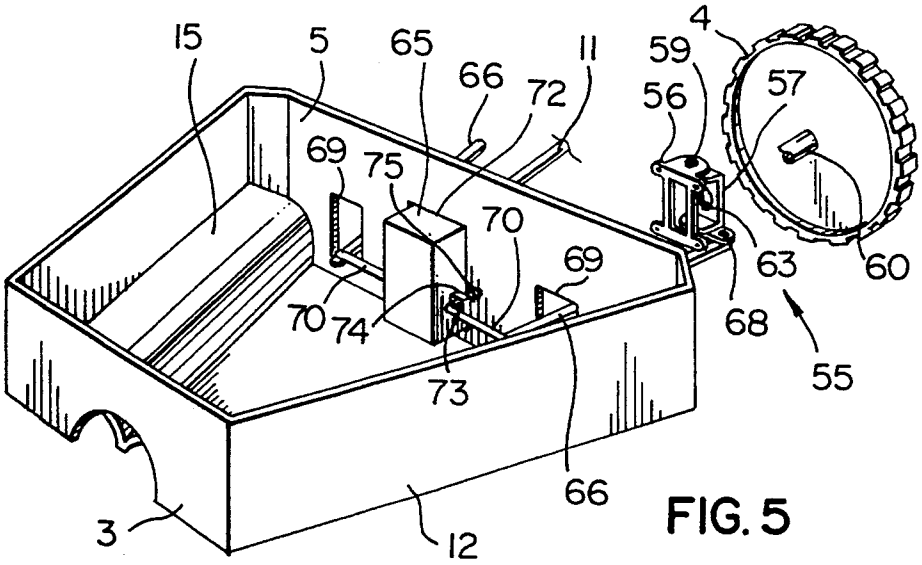
15
5
65
66
72
11
59
4
56
57
69
75
70
69
63
60
70
74
68
55
73
66
3
12

FIG. 5

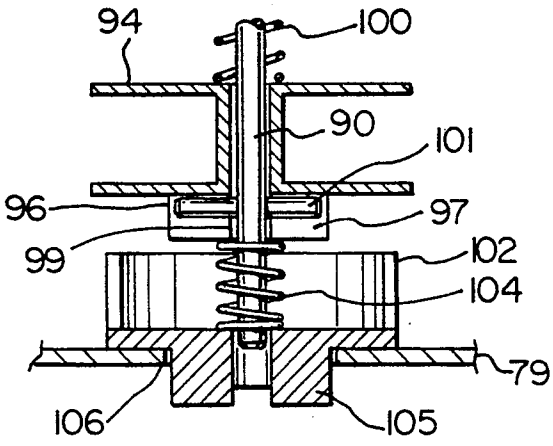
94
100
90
101
96
97
99
102
104
79
106
105

FIG. 7

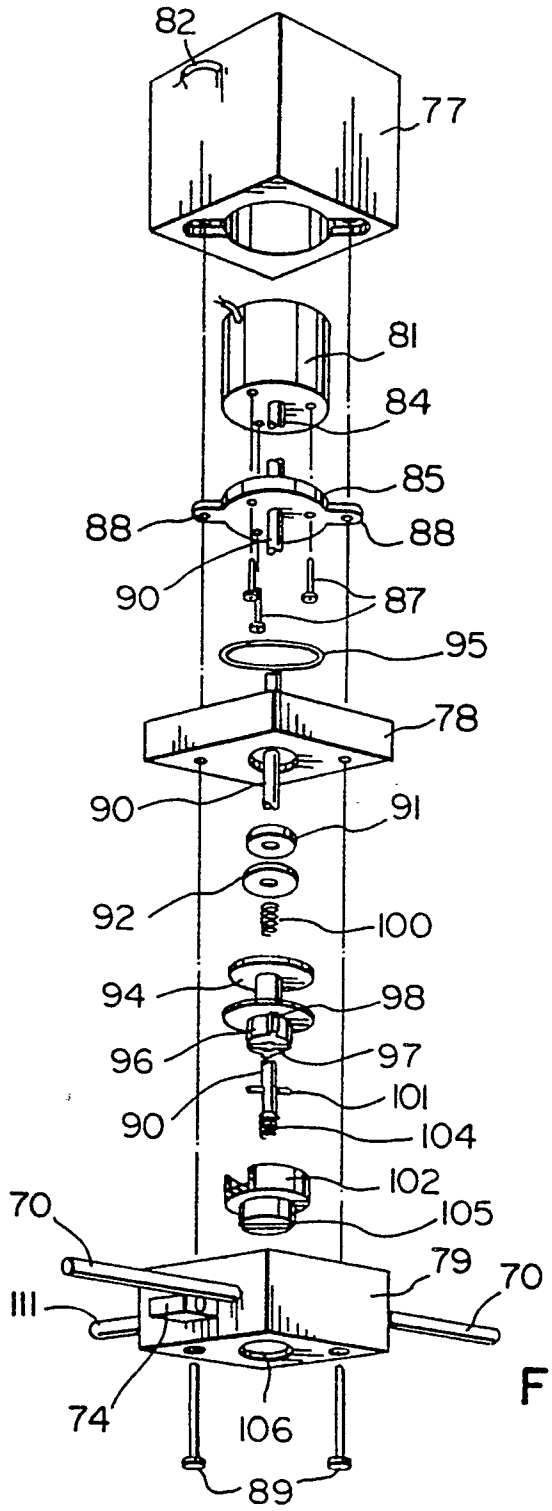
82
77
81
84
85
88
88
90
87
95
78
90
91
92
100
94
98
96
97
101
90
104
102
105
70
79
70
111
74
106
89

FIG. 6

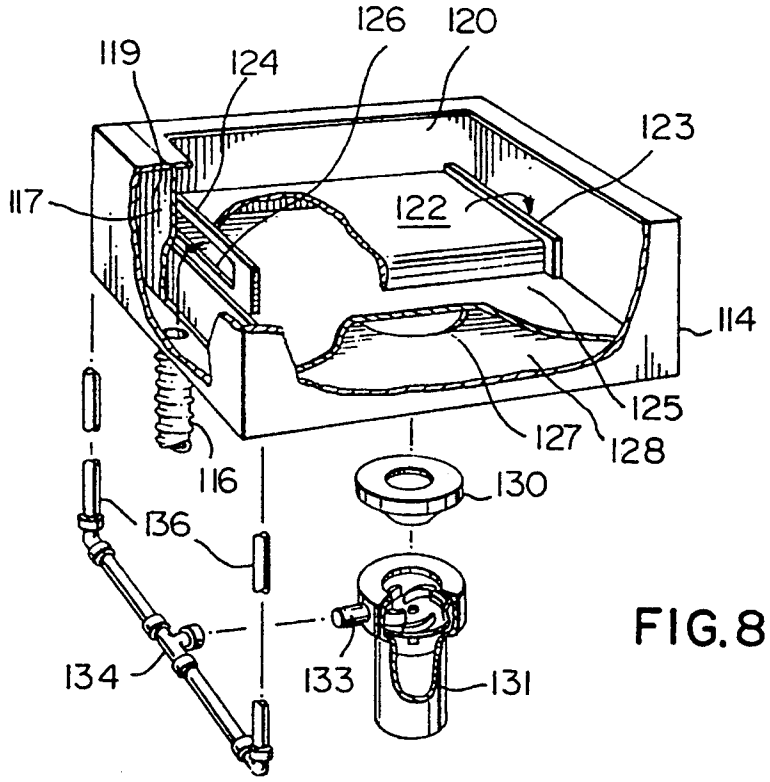
126
120
119
124
123
117
122
114
125
127
128
116
130
136
134
133
131

FIG. 8

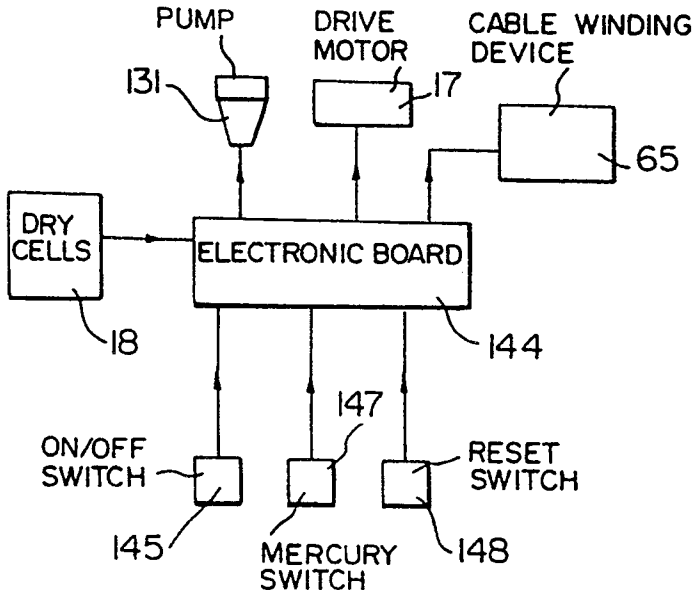
PUMP
DRIVE MOTOR
CABLE WINDING DEVICE
131
17
65
DRY CELLS
ELECTRONIC BOARD
18
144
147
ON/OFF SWITCH
RESET SWITCH
145
MERCURY SWITCH
148

FIG. 9

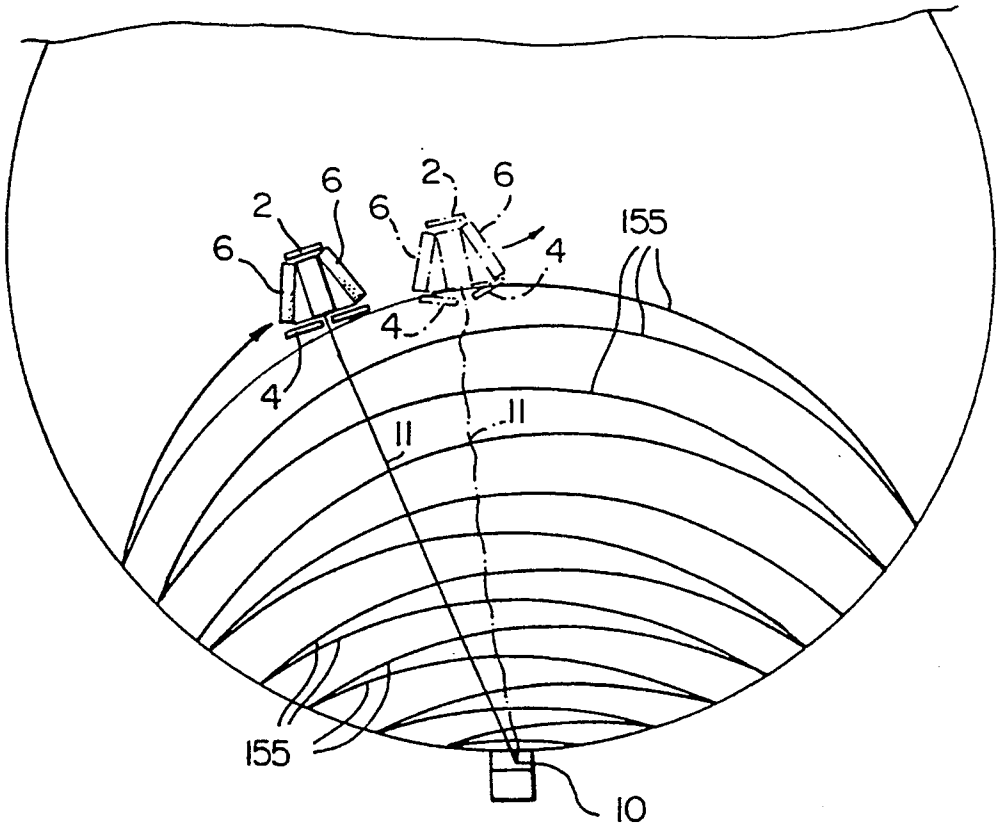


FIG. 10

# SWIMMING POOL CLEANER

## BACKGROUND OF THE INVENTION

1. Field of the Invention

This invention relates to a swimming pool cleaner, and in particular to a pool cleaner of the submersible type.

2. Discussion of the Prior Art

Submersible swimming pool cleaners are by no means new. Generally, such cleaners operate in a random manner, i.e. follow no set path of travel along the bottom of a swimming pool. A pool cleaner of this type is disclosed, for example by U.S. Pat. No. 4,558,479, which issued to P. Breskovics et al on Dec. 17, 1985. A problem with random movement cleaners is the lengthy period of time required to clean an entire swimming pool, and consequently the large power consumption involved in such an operation.

A solution to the problem of random movement cleaners is provided by cleaners following a predetermined path of travel. An example of a pool cleaner of this type is disclosed by U.S. Pat. No. 2,988,762, issued to H. H. Babcock on Jun. 20, 1961. The Babcock device relies on mechanical sensors for determining when turning and the reversing of the direction of travel should be effected. In other words, there is no positive control of the path of travel of the cleaner, and accordingly there is a distinct possibility that the path of travel will be erratic, and that areas of the pool bottom will be missed.

It is readily apparent that a need exists for a swimming pool cleaner, which is capable of quickly cleaning an entire pool bottom in an efficient manner. The object of the present invention is to meet such need by providing a relatively simple swimming pool cleaner, which follows a predetermined path of travel, and which will ensure the cleaning of the entire area traversed by the cleaner.

## GENERAL DESCRIPTION OF THE INVENTION

Accordingly, the present invention relates to a swimming pool cleaner of the submersible type comprising casing means; first wheel means on one end of said casing means; second wheel means on the other end of said casing means; brush means rotatably mounted on said casing means for dislodging dirt from a pool bottom; pump means in said casing means for pumping water through said casing means; filter means in the path of travel of the water pumped by said pump means for removing dirt from the water; reversible drive means for rotating said first and second wheel means and said brush means; switch means for causing the drive means to reverse the direction of travel upon reaching a pool wall; cable means for connecting said casing means to a point on the periphery of the swimming pool for causing the cleaner to follow an arcuate path of travel dependent upon the distance between the cleaner and said point; winding means for changing the length of said cable means whereby the distance between said point and the cleaner is changed; release means for releasing tension on said cable means; and spring means biasing said second wheel means to a turning position, whereby, by changing the tension on said cable means, while continuing to drive said wheel means, the cleaner can be caused to turn to effect corrections to the path of travel of the cleaner.

The invention will be described in greater detail with reference to the accompanying drawings, which illustrate a preferred embodiment of the invention, and wherein:



FIG. **1** is a schematic, perspective view of a swimming pool cleaner in accordance with the present invention from one end thereof;

FIG. **2** is a schematic, plan view of the swimming pool cleaner of FIG. **1**;

FIG. **3** is an exploded, perspective view of a swimming pool cleaner similar to that shown in FIGS. **1** and **2**;

FIG. **4** is an exploded, perspective view of a drive used in the apparatus of FIGS. **1** to **3**;

FIG. **5** is an exploded view of a portion of the casing and one wheel of the cleaner of FIGS. **1** to **3**;

FIG. **6** is an exploded, perspective view of a cable winding device used in the cleaner of FIGS. **1** to **3**;

FIG. **7**, which appears on the fourth sheet of drawings, is a longitudinal sectional view of a portion of the device of FIG. **6**;

FIG. **8** is an exploded, perspective view of a filter used in the cleaner of FIGS. **1** to **3**;

FIG. **9** is a schematic, block diagram of a control system used in the device of FIGS. **1** to **3**; and

FIG. **10** is a schematic, plan view of an area of swimming pool illustrating the operation of a device of the present invention.

## DESCRIPTION OF PREFERRED EMBODIMENT

### Apparatus—General Description

With reference to FIGS. **1** and **2**, the apparatus of the present invention includes a casing **1** carrying a single wheel **2** at one narrow end **3** (FIG. **3**) and a pair of wheels **4** at the other wide end **5** thereof. A pair of brushes **6** are rotatably mounted on the bottom of the casing **1** for dislodging dirt from the bottom of a swimming pool. A float **7** is pivotally connected to the casing **1** by arms **8** for providing stability, i.e. for maintaining the casing upright when the apparatus encounters stairs or a side of the pool. The apparatus is connected to a fixed point **10** (FIG. **10**) on one side or end of the swimming pool by a cable **11** for determining the path of travel of the apparatus.

### Apparatus—Detailed Description

Referring to FIG. **3**, in a specific version of the apparatus described above, the casing **1** is defined by an elongated tapering body **12**, a cover **13** and a base plate **14**. Wells **15** (one shown) for the brushes **6** are provided on the bottom of the body **12**, and bars **16** extend longitudinally between the top ends of the body **12**. The body **12** carries the wheels **2** and **4**, and a drive mechanism for such wheels.

The wheel drive mechanism includes a reversible motor **17** mounted in the body **12**. Power for the motor **17** is provided by a pair of batteries or dry cells **18**, which are carried by casings **20**. Flanges **21** are provided on the top ends of the casings **20** for mounting the latter on the sides of the body **12** and the bars **16**. The dry cells **18** are protected by covers **23**. The drive shaft **24** of the motor **17** is connected to a gearbox **25** connected to the outer end of the body **12** at the narrow end thereof by bolts **26**.

The gearbox **25** (FIG. **4**) includes arch-shaped casing halves **27**, with flanges **28** on one of the halves for receiving the bolts **26**. The interior of the gearbox **25** is divided by a partition **30**. Three gears **31** and **32** are provided on the inlet side of the partition **30**. A central

gear **31** is mounted on the motor drive shaft **24**. The gear **31** drives the other gears **32**, which carry shafts **35** for rotating the wheels **4**. The gear **31** also carries a shaft **37** extending outwardly through the partition **30** into a large gear **38**. The gear **38** rotates gears **39** carrying shafts **40** for rotating the brushes **6**, and a gear **41** which carries an output shaft **42** for the single wheel **2**. The various bolts **44**, nuts **45** and sleeves **46** used to interconnect and space apart the elements of the gearbox **24** are illustrated schematically in FIG. **4**. The transmission is such that the brushes **6** are rotated more quickly than the wheels **2** and **4**.

As best shown in FIG. **3**, each shaft **40** is connected to one end of a brush **6** by a universal joint **48**. The other end of the brush **6** is connected to a bracket **49** by a clip **51**. The shafts **35** for the pair of wheels **4** are connected to such wheels by shafts **52** and universal joints **53**. The wheels **4** are rotatably mounted on clevis-like hinges generally indicated at **55** (FIG. **5**). Each hinge **55** is defined by a pair of generally C-shaped opposed brackets **56** and **57**, which are pivotally interconnected by screws **59**. One bracket **56** is mounted on the wide end of the casing body **12**, and the other bracket **57** carries the wheel **4**. A shaft **60** carrying the wheel **4** extends through the wheel and is maintained therein by a nut **61**. The other end of the shaft **60** extends through a bearing **62** and a hole **63** (FIG. **5**) in the bracket **57**.

Steering of the wheels **4** is effected by a cable winding device **65** and levers **66** connected to lugs **68** on the outer side edges of the brackets **55**. The lugs **68** extend outwardly from the brackets **57**, and are pivotally connected to the outer ends of the levers **66**. Each lever **66** extends through an opening **69** in the wide end **5** of the body **12** to one end of an arm **70**. The lever **66** is pivotally connected to such one end of the arm **70**, and the other end of the arm **70** is connected to a cable winding device **65**, which is slidably mounted in a central opening **72** in the wide end **5** of the body **12**. The arms **70** are biased to a position in which the cable winding device is retracted into the body **12** by rods **73** slidable in lugs **74** on each side of the cable winding device and helical springs **75** on such rods biasing the device **65** away form the wide end wall of the body **12**.

As described hereinafter in greater detail, the wheels **4** and consequently the apparatus are caused to turn by altering the tension on the cable **11**, which is the function of the cable winding device **65**. Referring to FIGS. **6** and **7**, the cable winding device **65** includes a housing defined by rectangular upper, middle and lower sections **77**, **78** and **79**, respectively. The upper housing section **77** carries an electric motor **81**, which receives power from the dry cells **18** via wire **82**. The shaft **84** of the motor is connected to a gear box **85**. Screws **87** connect the gearbox **85** to the motor **81**, and lugs **88** on the gearbox are used to secure the motor **81** and gearbox in the upper housing section **77**. Screws **89** extend through the middle and lower housing sections **78** and **79**, respectively and the lugs **88** into the upper housing section **79** to hold the device together. The output shaft **90** of the gearbox **85** extends through a seal **91** in the middle housing section **78** and a washer **92** to a spool **94**, which is slidable on the shaft **90**. The device **65** is rendered watertight by an O-ring **95** and the seal **91**. The washer **92** serves as a bearing surface for the spool **94**.

A disc **96** is provided on the bottom end of the spool **94**. The disc **96** is bisected by a diametrically extending groove **97** (FIG. **7**). A pair of diametrically opposed lugs **98** extend outwardly from the side of the disc **96** perpendicular to the groove **97**. An opening **99** for receiving the shaft **90** extends through the centre of the disc **96**. A helical spring **100** on the shaft **90** above the spool **94** biases the spool against a crossbar **101** extending through the bottom of the shaft **90** thereby maintaining the spool engaged with the motor drive shaft.

The disc **96** and the crossbar **101** form part of a spool manual release or winding mechanism, which includes a cup **102** and a helical spring **104** on the bottom end of the shaft **90**. The cup **102** has a slotted button **105** on the bottom end thereof. The button **105** is accessible through an opening **106** in the lower housing section **79**. Upward pressure on the button **105** causes movement of the cup **102** to compress the spring **104** until the cup **102** engages and locks onto the spool **94**. Further pressure on the cup **102** causes compression of the spring **100** and upward movement of the spool **94** until it presses against the washer **92**, at which point the spool is disengaged from the crossbar **101** and is free to rotate to either release, or to wind the cable if manually forced to rotate in the opposite direction. Thus, the spool **94** can be rotated in the opposite direction to rewind the cable **11** as required after each cleaning operation. A cable guide tube **111** extends out the lower housing section **79** perpendicular to the arms **70**.

Referring to FIGS. **3** and **8**, a plate **112** mounted on the body **12** supports a filtration system and an electronic control device **113**. The filtration system includes a rectangular filter housing **114** for receiving pool water through an inlet **115** (FIG. **3**) in the base plate **14** and an inlet duct **116**. A vertical partition **117** divides the interior of the housing **114** into an inlet chamber **119** and a filter chamber **120**. A domed filter **122** (FIG. **8**) with a closed end **123** and an open end **124** is mounted on a ledge **125** in the filter chamber **120**. Water entering the inlet chamber **119** flows through an opening **126** in the partition **117** and the open end **124** of the filter **122**. The water passes through the filter **122** and around one end of the ledge **125**, and exits through an outlet opening **127** in the bottom wall **128** of the housing **114**, and a seal **130** to the inlet end of a pump **131**. The pump **131** is mounted on the plate **112**. The water is discharged via an outlet duct **133**, a T-joint **134**, outlet pipes **136** and openings **137** (FIG. **3**) in the cover **13**. A seal **139** is provided between the open top end of the filter housing **114** and the cover **13**. In the version of the invention shown in FIG. **3**, the float (not shown) is connected to lugs **140** on the cover **13**, and a handle **142** is provided on the cover for carrying the device.

With reference to FIG. **9**, the control for the device includes an electronic board **144** mounted in the device **113** and connected to an on/off switch **145**, the dry cells **18**, the drive motor **17**, the cable winding device **65**, the pump **131**, a mercury switch or switches **147** mounted directly on the electronic board **144** for reversing the direction of travel of the device and starting of the cable winding device **65**.

The on/off switch **145** and a cleaning timer reset switch are provided in a module **150** (FIG. **3**) mounted on the plate **112** and accessible through an opening **152** in one end of the cover **13**. The switch **147** for reversing the direction of travel of the cleaner is mounted on the module **150**.

In operation, if the cleaner is started at point **10**, at the end of every cleaning cycle the user will have to rewind the cable. This is achieved by inserting a screw driver into the slot in the button **105** and pushing the button in, thus releasing the spool **94** from the crossbar **101** and

hence from its engagement with the drive shaft **100**. The spool **94** can then be freely turned in the desired direction to rewind the cable. As the button **105** is released, the spring **100** returns the spool **94** to its normal position engaged with the crossbar **101**, and the spring **104** disengages cup **102** from the spool **94**. If the cleaner is to be started at the opposite end of the pool, then manually depressing the button **105** will disengage the spool from the crossbar **101** and allow the cable to unwind freely because one end of the cable is attached to point **10** (FIG. **10**) and the cleaner is carried to the opposite end. The use of a switch (not shown) actuated by the float **7** ensures that the device will reverse direction if it reaches the surface of the water. The cleaner is started, and during movement the mercury switches cause the device to reverse direction each time the cleaner contacts and begins to climb an obstacle such as a wall. Time delays are incorporated in the logistics of the device either to provide time for the cleaner to react before making a decision or to prevent damage to the apparatus as could happen, for example if the cleaner was permitted to reverse direction of travel instantly. The timers include (a) a first timer for overriding the mercury switches in the event that the device does not contact a wall within a predetermined time lapse, (b) a second timer for controlling the total cleaning time to deactivate the unit after the total area has been covered, and (c) a third timer for controlling the duration of operation of the cable winding device **65** each time the unit reverses direction of travel. The second timer is set by the user using the reset switch **148** (FIG. **9**) in accordance with the pool dimensions. The third timer is preset by the manufacturer. The third timer is not required to achieve the pattern of FIG. **10**, i.e. a continuous series of arcs **155** interconnect at alternate ends. The third timer would be used to achieve a pattern in which the ends of the arcs are squared off so that the arcs **155** are parallel.

It will be appreciated from the foregoing that the device of the present invention will clean the inner surface of a swimming pool in a predetermined pattern, and under controlled conditions, which reduces the time required to clean the entire surface of the pool. The cleaner is independent of other pool accessories such as the water filtering system so that such other systems can continue functioning in their normal operating modes during the cleaning operation. Articles are dislodged from the surface being cleaned by means of the two rotating brushes **6**, which are angled with respect to the longitudinal axis of the cleaner. The brushes **6** are driven independently at a speed slightly higher than that of the wheels **2** and **4**. The use of a generally triangular cleaner configuration ensures that the pool edges and corners are cleaned efficiently.

The filtering system illustrated in FIG. **8** is designed in such a manner to minimize potential clogging by leaves or similar material. Because the filter **122** is upstream from the pump or turbine **131**, particles are removed from the water before the water enters the pump. The filter is located immediately under the cover **13**, and thus is readily accessible for cleaning or replacement. The use of an elongated filter enables the cleaner to contain a maximum amount of dirt without blocking of the filter. The flow of water through the filter is such that filtered materials will accumulate at one end of the filter, and build up towards the opposite end thereof until the entire filter is occupied. Thus, there is no gradual clogging of the entire filter area, accompanied by steadily decreasing suction capabilities.

Finally, the use of a casing **1**, which tapers from one end to the other thereof, with a single wheel at the narrow end and a pair of wheels at the wide and facilitates movement in the pattern shown in FIG. **10**. By suitable angling of the two wheels **4** at one end of the casing **1**, the cleaner will normally travel in an arc, the radius of which is defined by the cable **11**. By making minor adjustments, i.e. by removing and replacing the tension on the cable using the cable winding device **65**, the levers **66** and the springs **75**, course corrections are effected during the entire cleaning operating to ensure that the cleaner follows the predetermined path of travel. The use of articulated links between the wheels **4** and the cable winding device **65** ensures that any movement of the cable winding device **65** is translated into a change in the orientation of the wheels **4** to effect a change in the path of travel of the cleaner. By spring loading the links in a manner to act in a direction opposite to the cable tension, any release of cable tension will result in the wheels adopting an angle between them designed to restore the cleaner to the desired trajectory. As soon as the trajectory has been corrected, tension on the cable **11** is restored to straighten the wheels **4**.

As the tension in the cable **11** increases, the cable winding device **65** is pulled towards the wall **5** of the body **12** and thereby pushes the wheels **4** to change direction in such a way that the cleaner follows the arc described by the cable under tension. Should the cleaner deviate from this path and the tension on the cable **11** decrease, the springs **75** will push the cable winding device **65** away from the wall **5** of the body **12**, which in turn changes the orientation of the wheels **4** so that the cleaner is directed along an arc opposite to the one naturally described by the cable under tension, thus reestablishing tension on the cable so that the cleaner recovers its normal pattern.

The cleaner is designed to accommodate a variety of power sources. In the embodiment illustrated, batteries **18** are used to operate the various elements of the cleaner. It will be appreciated that the battery pack can also be separate from the cleaner, e.g. float on the surface of the pool or sit on the pool side. It is also possible to utilize a transformer located at a safe distance from the pool. In all cases where the power supply is external to the cleaner, the power supply cable to the cleaner is equipped with floats, which keep the cable clear of the unit to avoid obstruction.

The embodiments of the invention in which an exclusive property or privilege is claimed are defined as follows:

**1**. A swimming pool cleaner of the submersible type comprising casing means; first wheel means on one end of said casing means; second wheel means on the other end of said casing means; brush means rotatably mounted on said casing means for dislodging dirt from a pool bottom; pump means in said casing means for pumping water through said casing means; filter means in the path of travel of the water pumped by said pump means for rotating said first and second wheel means and said brush means; switch means for causing the drive means to reverse the direction of travel upon reaching a pool wall; cable means for connecting said casing means to a point on the periphery of the swimming pool for causing the cleaner to follow an arcuate path of travel, the trajectory of the path being dependent upon the distance between the cleaner and said

point; winding means for changing the length of said cable means whereby the distance between said point and the cleaner is changed; release means connected to said winding means permitting coiling or uncoiling of said cable means; and spring means biasing said second wheel means to a turning position, whereby, by changing the tension on said cable means, while continuing to drive said wheel means, the cleaner can be caused to turn to effect corrections to the path of travel of the cleaner.

**2**. A swimming pool cleaner according to claim **1**, wherein said drive means includes first motor means in said casing means; transmission means connected to said first motor means; and shaft means connected to said transmission means and to each said first and second wheel means for rotating said wheel means in unison.

**3**. A swimming pool cleaner according to claim **1**, wherein said winding means includes spool means in said casing means for receiving the cable means; second motor means; shaft means extending out of said second motor means for rotating said spool means; and cable housing means carrying said second motor means, shaft means and spool means in said casing means.

**4**. A swimming pool cleaner according to claim **3**, wherein said release means including second spring means normally biasing said spool means to engagement with said shaft means; and pushbutton means extending out of said cable housing means for pushing said spool means out of engagement with said shaft means, whereby the spool means can unwind freely.

**5**. A swimming pool cleaner according to claim **4**, wherein said release means includes third spring means for returning said spool means to the shaft means engaging position when pressure on said pushbutton means is released.

**6**. A swimming pool cleaner according to claim **1**, wherein said filter means includes filter housing means; partition means dividing said filter housing means into inlet and outlet chambers; ledge means in said outlet chamber, an outlet opening in said filter housing means beneath said ledge means; and a dome filter on said ledge means with a first closed end in said outlet chamber and a second end opening into said inlet chamber, whereby liquid entering said inlet chamber flows into said filter, through the filter and over the ledge to said outlet opening.

* * * * *