US 20050080814A1

(19) United States

(12) Patent Application Publication

(10) Pub. No.: US 2005/0080814 A1

(43) Pub. Date: Apr. 14, 2005

Hailey et al.

(54) DOCUMENT CREATION SYSTEM AND METHOD USING KNOWLEDGE BASE, PRECEDENCE, AND INTEGRATED RULES

(75) Inventors: **Richard Warren Hailey**, St. Cloud, MN (US); **Richard Keith Wyman**, St. Cloud, MN (US); **Scott James Walter**, Plymouth, MN (US); **Thomas William Weitzel**, Cold Spring, MN (US); **Susan Bosl Hollingsworth**, Sartell, MN (US); **Abdias Evangelista-de Lira**, Clinton Township, MI (US); **Samuel Richard Hollingsworth**, Sartell, MN (US); **Paul John Gunn**, Rochester Hills, MI (US)

Correspondence Address:
Michael Best & Friedrich LLP
Suite 1900
401 North Michigan Avenue
Chicago, IL 60611 (US)

(73) Assignee: **Bankers Systems Inc.**, St. Cloud,, MN

(21) Appl. No.: **10/814,548**

(22) Filed: **Mar. 31, 2004**

Related U.S. Application Data

(60) Provisional application No. 60/510,742, filed on Oct. 13, 2003. Provisional application No. 60/542,076, filed on Feb. 4, 2004.

Publication Classification

(51) **Int. Cl.**[7] **G06F 17/00**

(52) **U.S. Cl.** ..... **707/103 R**

(57) **ABSTRACT**

A data structure generation system. The system includes a knowledge base configured to store data structure components as objects in an object-relational hierarchy. Each object is configured to have a precedence, to include one or more rules, and to include content. The knowledge base may be coupled to a data structure assembly facility configured to retrieve one or more cross-referenced data structure components from a database. The one or more data structure components are configured to have a precedence level, and may be processed in a processor to generate a tree having a root node. The tree may be processed beginning at the root node, and objects of low precedence may be overidden with objects of high precedence.

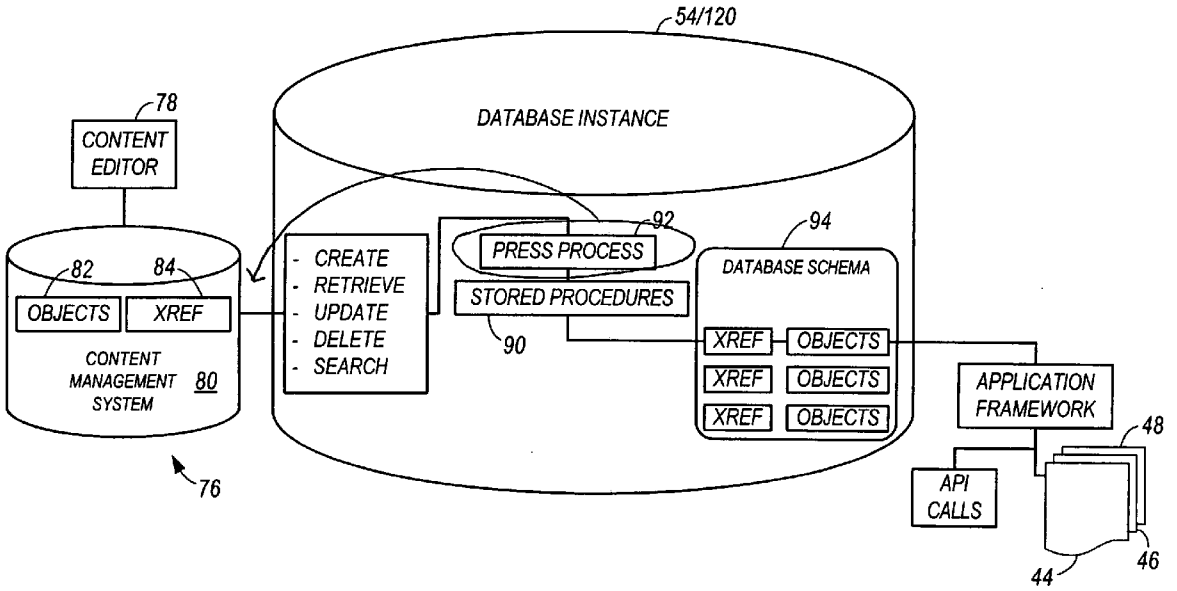

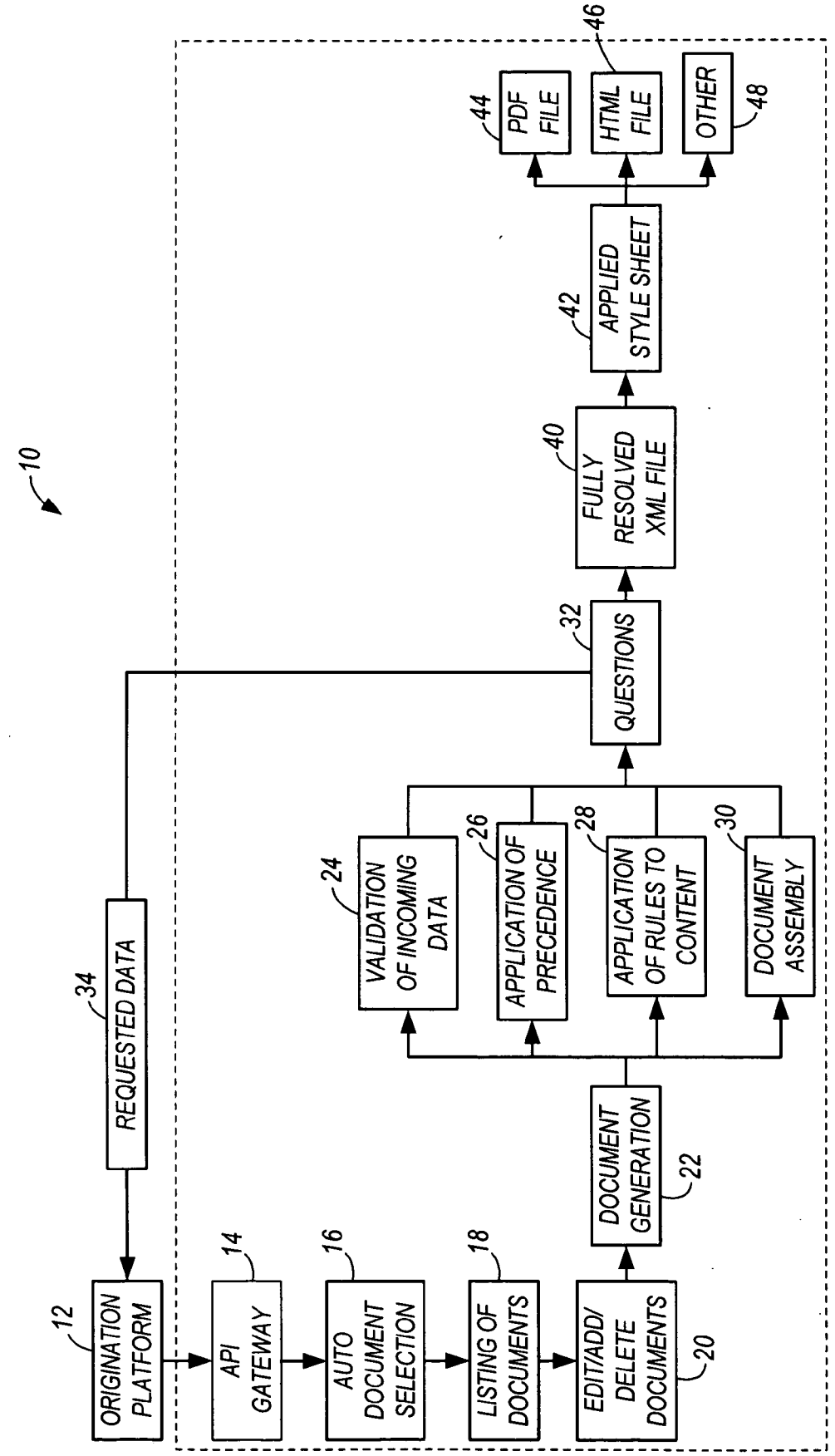
10
12
ORIGINATION PLATFORM
34
REQUESTED DATA
14
API GATEWAY
16
AUTO DOCUMENT SELECTION
18
LISTING OF DOCUMENTS
EDIT/ADD/ DELETE DOCUMENTS
20
DOCUMENT GENERATION
22
24
VALIDATION OF INCOMING DATA
26
APPLICATION OF PRECEDENCE
28
APPLICATION OF RULES TO CONTENT
30
DOCUMENT ASSEMBLY
32
QUESTIONS
40
FULLY RESOLVED XML FILE
42
APPLIED STYLE SHEET
44
PDF FILE
46
HTML FILE
48
OTHER

FIG. 1

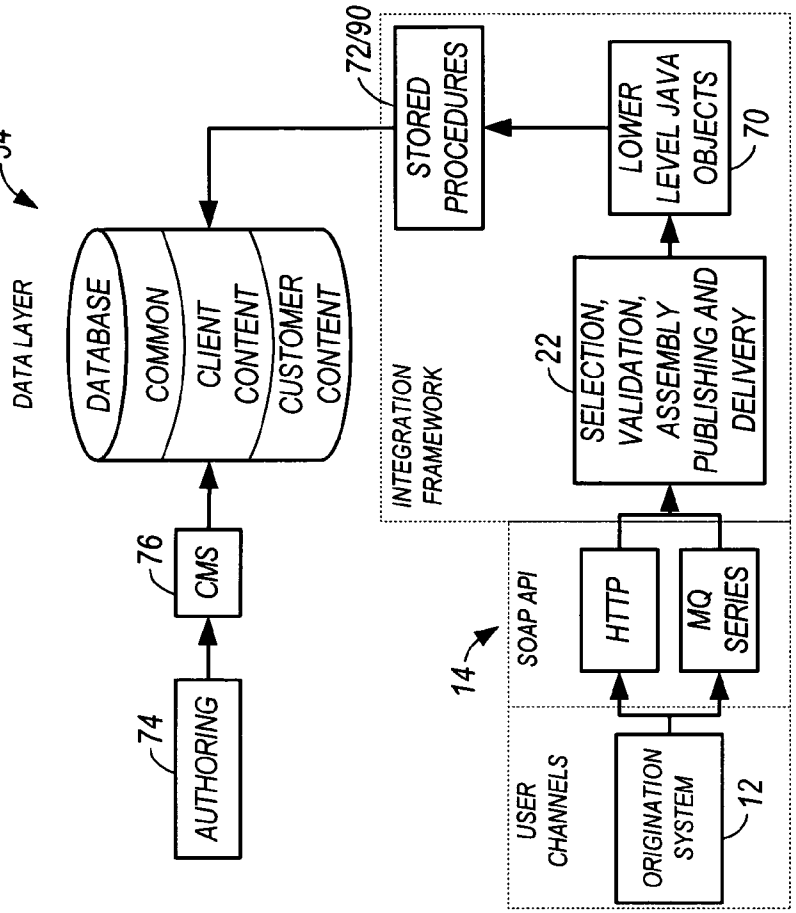
54
DATA LAYER
DATABASE
COMMON
CLIENT CONTENT
CUSTOMER CONTENT
76
CMS
74
AUTHORING
72/90
STORED PROCEDURES
INTEGRATION FRAMEWORK
22
SELECTION, VALIDATION, ASSEMBLY PUBLISHING AND DELIVERY
LOWER LEVEL JAVA OBJECTS
70
14
SOAP API
HTTP
MQ SERIES
USER CHANNELS
ORIGINATION SYSTEM
12

FIG. 3

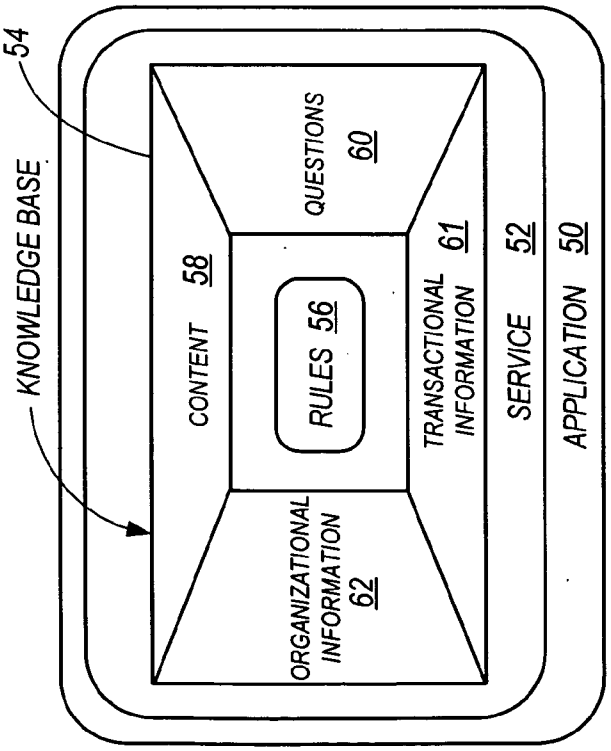
54
KNOWLEDGE BASE
CONTENT 58
QUESTIONS 60
RULES 56
ORGANIZATIONAL INFORMATION 62
TRANSACTIONAL INFORMATION 61
SERVICE 52
APPLICATION 50

FIG. 2

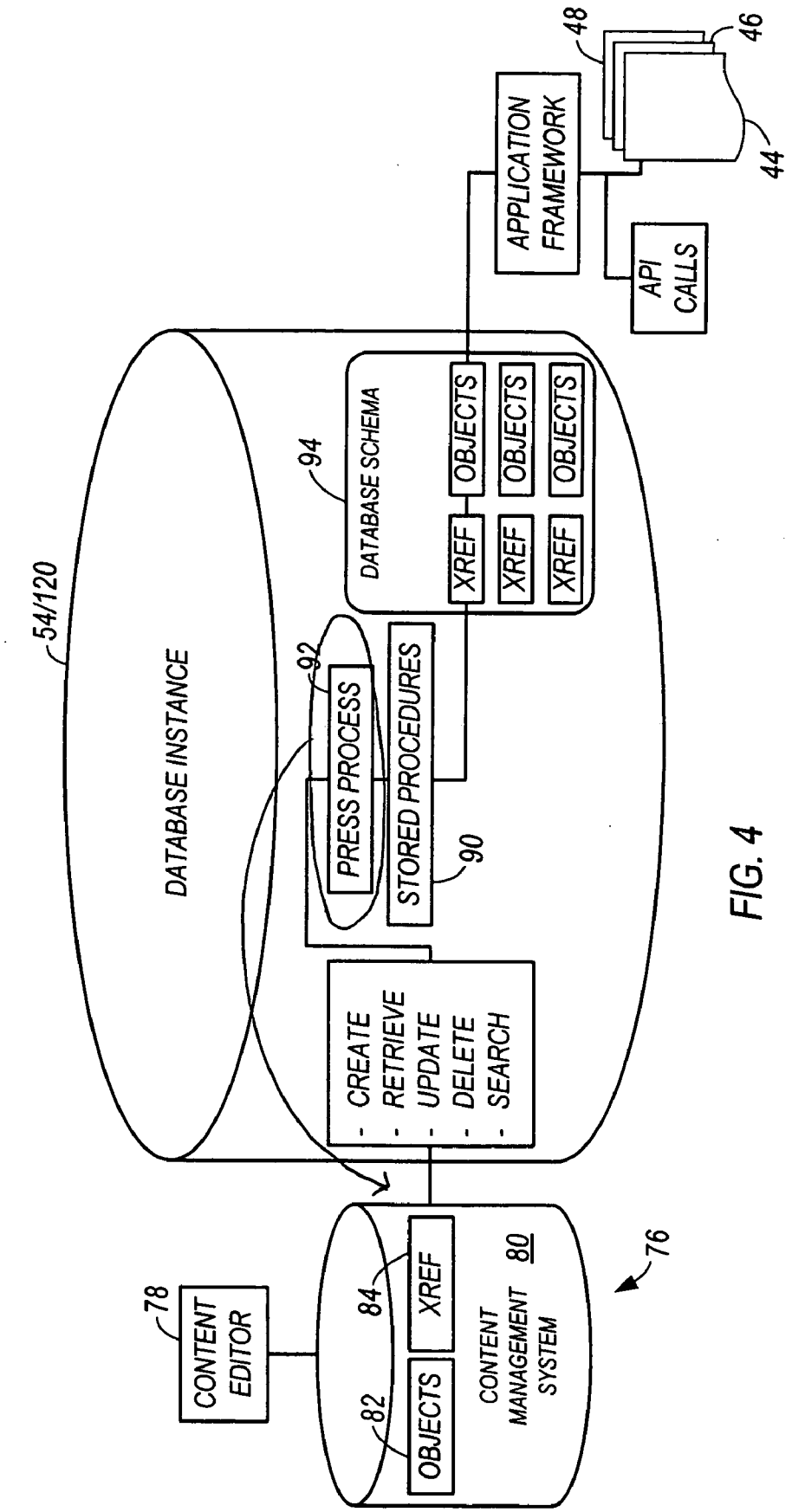
48
46
44
APPLICATION FRAMEWORK
API CALLS
54/120
DATABASE INSTANCE
94
DATABASE SCHEMA
OBJECTS
OBJECTS
OBJECTS
XREF
XREF
XREF
92
PRESS PROCESS
STORED PROCEDURES
90
- CREATE
- RETRIEVE
- UPDATE
- DELETE
- SEARCH
78
CONTENT EDITOR
84
XREF
82
OBJECTS
CONTENT MANAGEMENT SYSTEM
80
76

FIG. 4

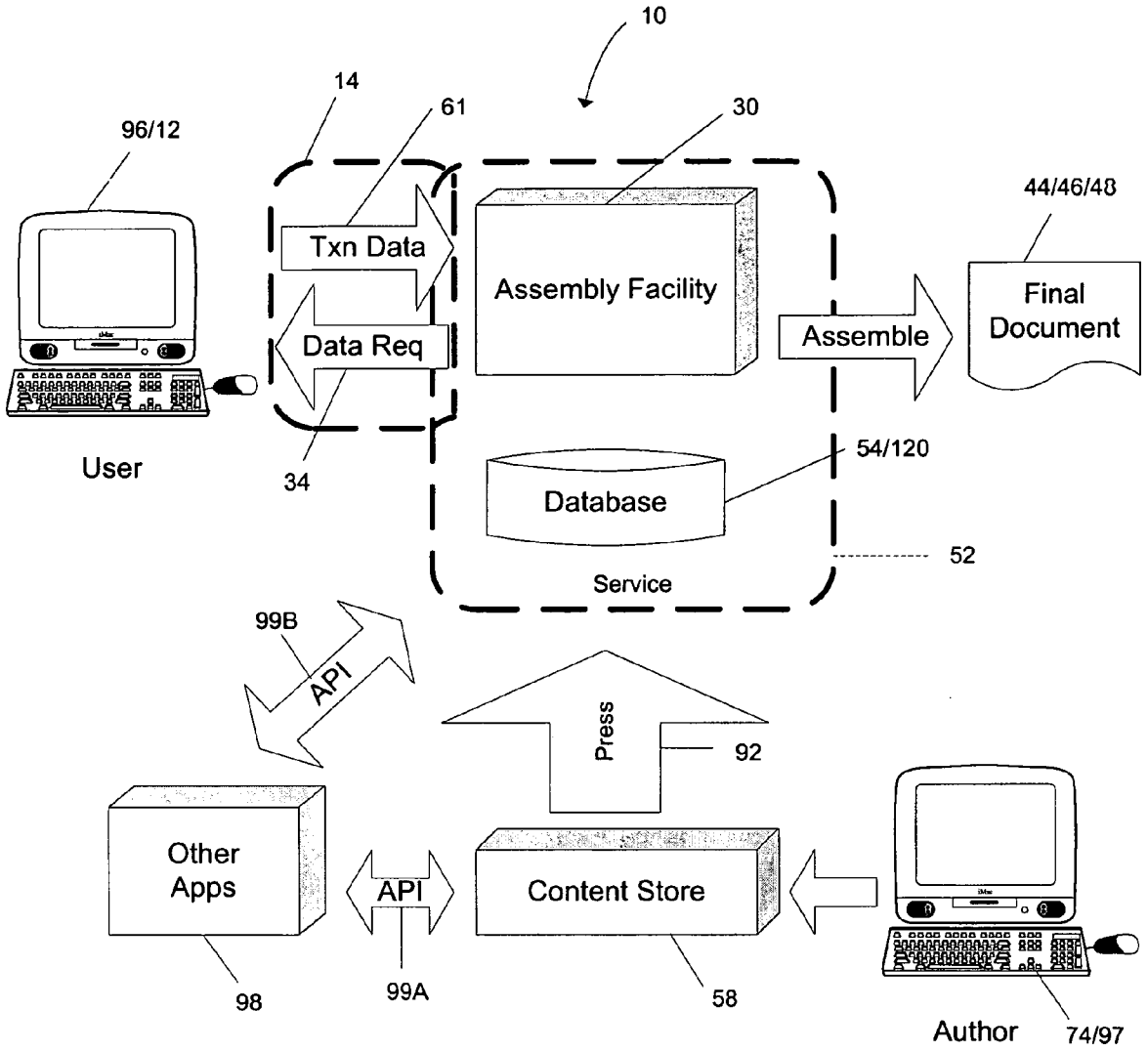
10
14
61
30
96/12
44/46/48
Txn Data
Assembly Facility
Final Document
Data Req
Assemble
User
34
54/120
Database
52
Service
99B
API
Press
92
Other Apps
API
Content Store
98
99A
58
Author
74/97

Fig. 4A

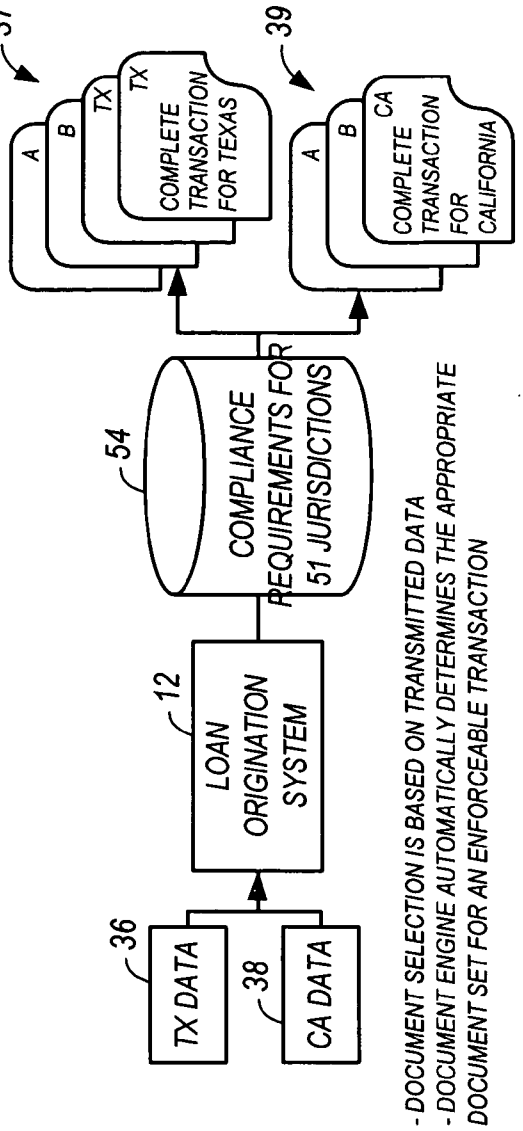
37
A
B
TX
TX
COMPLETE TRANSACTION FOR TEXAS
39
A
B
CA
COMPLETE TRANSACTION FOR CALIFORNIA
54
COMPLIANCE REQUIREMENTS FOR 51 JURISDICTIONS
12
LOAN ORIGINATION SYSTEM
36
TX DATA
38
CA DATA
- DOCUMENT SELECTION IS BASED ON TRANSMITTED DATA
- DOCUMENT ENGINE AUTOMATICALLY DETERMINES THE APPROPRIATE DOCUMENT SET FOR AN ENFORCEABLE TRANSACTION

FIG. 5

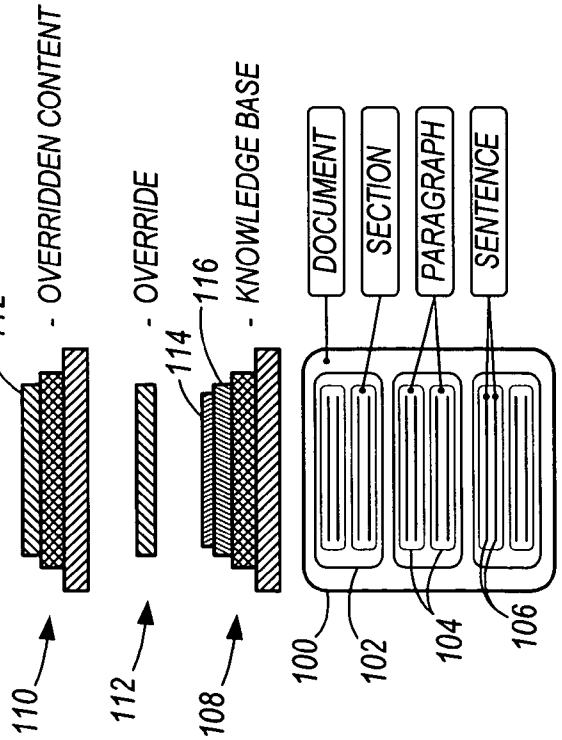
112
- OVERRIDDEN CONTENT
- OVERRIDE
114
116
- KNOWLEDGE BASE
DOCUMENT
SECTION
PARAGRAPH
SENTENCE
110
112
108
100
102
104
106

FIG. 6

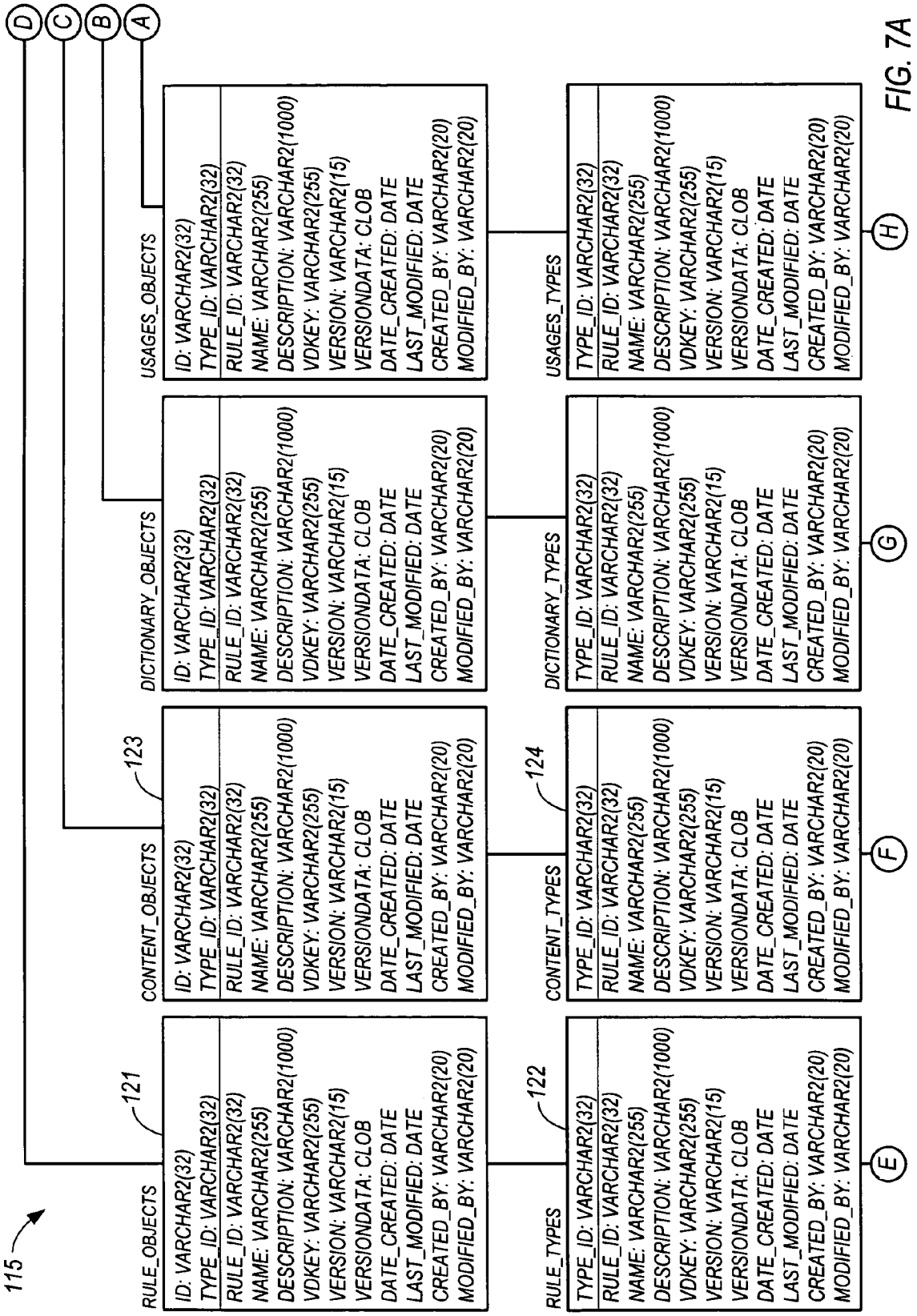
115
RULE_OBJECTS
121
ID: VARCHAR2(32)
TYPE_ID: VARCHAR2(32)
RULE_ID: VARCHAR2(32)
NAME: VARCHAR2(255)
DESCRIPTION: VARCHAR2(1000)
VDKEY: VARCHAR2(255)
VERSION: VARCHAR2(15)
VERSIONDATA: CLOB
DATE_CREATED: DATE
LAST_MODIFIED: DATE
CREATED_BY: VARCHAR2(20)
MODIFIED_BY: VARCHAR2(20)
CONTENT_OBJECTS
123
ID: VARCHAR2(32)
TYPE_ID: VARCHAR2(32)
RULE_ID: VARCHAR2(32)
NAME: VARCHAR2(255)
DESCRIPTION: VARCHAR2(1000)
VDKEY: VARCHAR2(255)
VERSION: VARCHAR2(15)
VERSIONDATA: CLOB
DATE_CREATED: DATE
LAST_MODIFIED: DATE
CREATED_BY: VARCHAR2(20)
MODIFIED_BY: VARCHAR2(20)
DICTIONARY_OBJECTS
ID: VARCHAR2(32)
TYPE_ID: VARCHAR2(32)
RULE_ID: VARCHAR2(32)
NAME: VARCHAR2(255)
DESCRIPTION: VARCHAR2(1000)
VDKEY: VARCHAR2(255)
VERSION: VARCHAR2(15)
VERSIONDATA: CLOB
DATE_CREATED: DATE
LAST_MODIFIED: DATE
CREATED_BY: VARCHAR2(20)
MODIFIED_BY: VARCHAR2(20)
USAGES_OBJECTS
ID: VARCHAR2(32)
TYPE_ID: VARCHAR2(32)
RULE_ID: VARCHAR2(32)
NAME: VARCHAR2(255)
DESCRIPTION: VARCHAR2(1000)
VDKEY: VARCHAR2(255)
VERSION: VARCHAR2(15)
VERSIONDATA: CLOB
DATE_CREATED: DATE
LAST_MODIFIED: DATE
CREATED_BY: VARCHAR2(20)
MODIFIED_BY: VARCHAR2(20)
RULE_TYPES
122
TYPE_ID: VARCHAR2(32)
RULE_ID: VARCHAR2(32)
NAME: VARCHAR2(255)
DESCRIPTION: VARCHAR2(1000)
VDKEY: VARCHAR2(255)
VERSION: VARCHAR2(15)
VERSIONDATA: CLOB
DATE_CREATED: DATE
LAST_MODIFIED: DATE
CREATED_BY: VARCHAR2(20)
MODIFIED_BY: VARCHAR2(20)
CONTENT_TYPES
124
TYPE_ID: VARCHAR2(32)
RULE_ID: VARCHAR2(32)
NAME: VARCHAR2(255)
DESCRIPTION: VARCHAR2(1000)
VDKEY: VARCHAR2(255)
VERSION: VARCHAR2(15)
VERSIONDATA: CLOB
DATE_CREATED: DATE
LAST_MODIFIED: DATE
CREATED_BY: VARCHAR2(20)
MODIFIED_BY: VARCHAR2(20)
DICTIONARY_TYPES
TYPE_ID: VARCHAR2(32)
RULE_ID: VARCHAR2(32)
NAME: VARCHAR2(255)
DESCRIPTION: VARCHAR2(1000)
VDKEY: VARCHAR2(255)
VERSION: VARCHAR2(15)
VERSIONDATA: CLOB
DATE_CREATED: DATE
LAST_MODIFIED: DATE
CREATED_BY: VARCHAR2(20)
MODIFIED_BY: VARCHAR2(20)
USAGES_TYPES
TYPE_ID: VARCHAR2(32)
RULE_ID: VARCHAR2(32)
NAME: VARCHAR2(255)
DESCRIPTION: VARCHAR2(1000)
VDKEY: VARCHAR2(255)
VERSION: VARCHAR2(15)
VERSIONDATA: CLOB
DATE_CREATED: DATE
LAST_MODIFIED: DATE
CREATED_BY: VARCHAR2(20)
MODIFIED_BY: VARCHAR2(20)
A
B
C
D
E
F
G
H

FIG. 7A

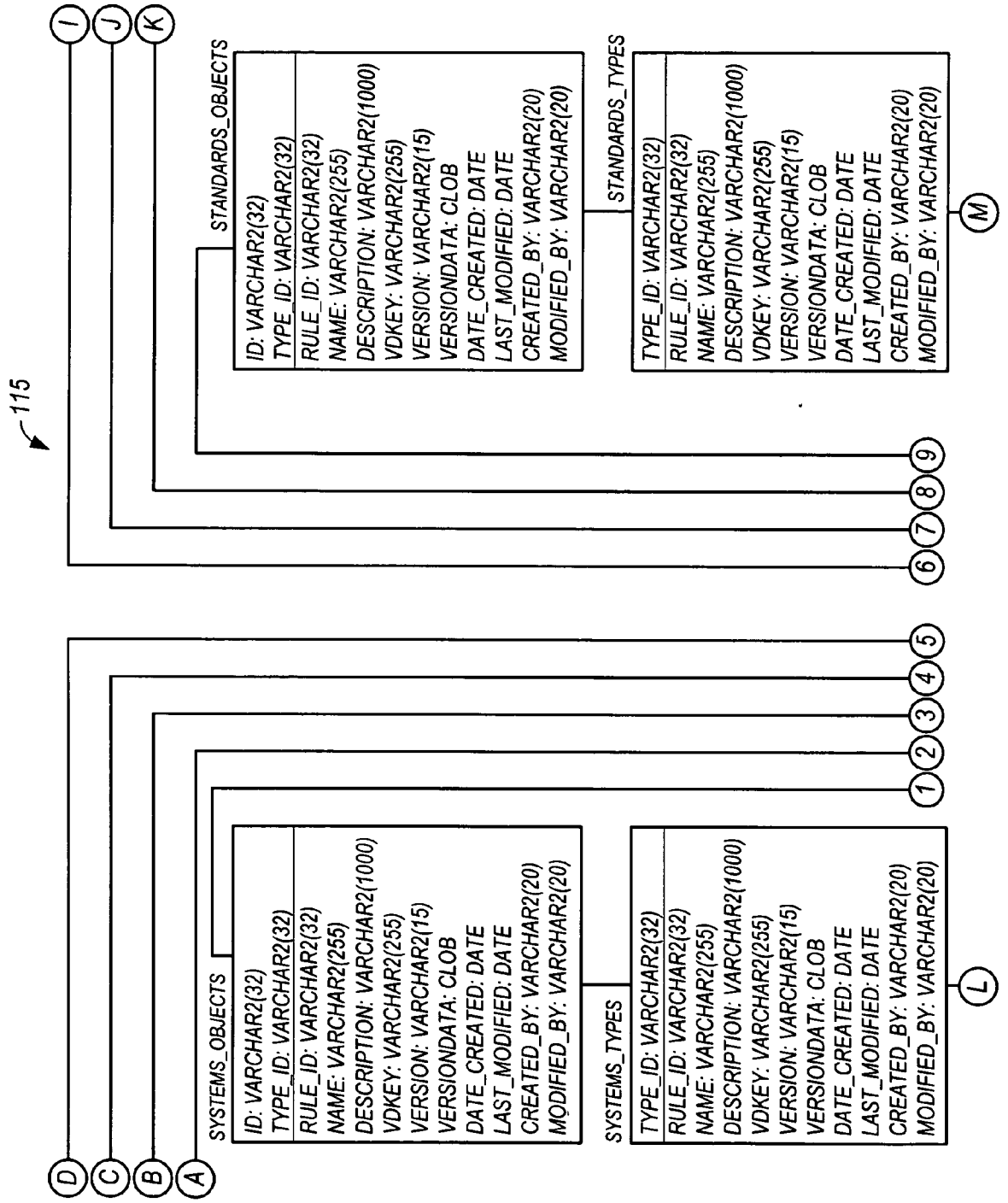
115
STANDARDS_OBJECTS
ID: VARCHAR2(32)
TYPE_ID: VARCHAR2(32)
RULE_ID: VARCHAR2(32)
NAME: VARCHAR2(255)
DESCRIPTION: VARCHAR2(1000)
VDKEY: VARCHAR2(255)
VERSION: VARCHAR2(15)
VERSIONDATA: CLOB
DATE_CREATED: DATE
LAST_MODIFIED: DATE
CREATED_BY: VARCHAR2(20)
MODIFIED_BY: VARCHAR2(20)
STANDARDS_TYPES
TYPE_ID: VARCHAR2(32)
RULE_ID: VARCHAR2(32)
NAME: VARCHAR2(255)
DESCRIPTION: VARCHAR2(1000)
VDKEY: VARCHAR2(255)
VERSION: VARCHAR2(15)
VERSIONDATA: CLOB
DATE_CREATED: DATE
LAST_MODIFIED: DATE
CREATED_BY: VARCHAR2(20)
MODIFIED_BY: VARCHAR2(20)
SYSTEMS_OBJECTS
ID: VARCHAR2(32)
TYPE_ID: VARCHAR2(32)
RULE_ID: VARCHAR2(32)
NAME: VARCHAR2(255)
DESCRIPTION: VARCHAR2(1000)
VDKEY: VARCHAR2(255)
VERSION: VARCHAR2(15)
VERSIONDATA: CLOB
DATE_CREATED: DATE
LAST_MODIFIED: DATE
CREATED_BY: VARCHAR2(20)
MODIFIED_BY: VARCHAR2(20)
SYSTEMS_TYPES
TYPE_ID: VARCHAR2(32)
RULE_ID: VARCHAR2(32)
NAME: VARCHAR2(255)
DESCRIPTION: VARCHAR2(1000)
VDKEY: VARCHAR2(255)
VERSION: VARCHAR2(15)
VERSIONDATA: CLOB
DATE_CREATED: DATE
LAST_MODIFIED: DATE
CREATED_BY: VARCHAR2(20)
MODIFIED_BY: VARCHAR2(20)
I J K 6 7 8 9 M
D C B A 1 2 3 4 5 L

FIG. 7B

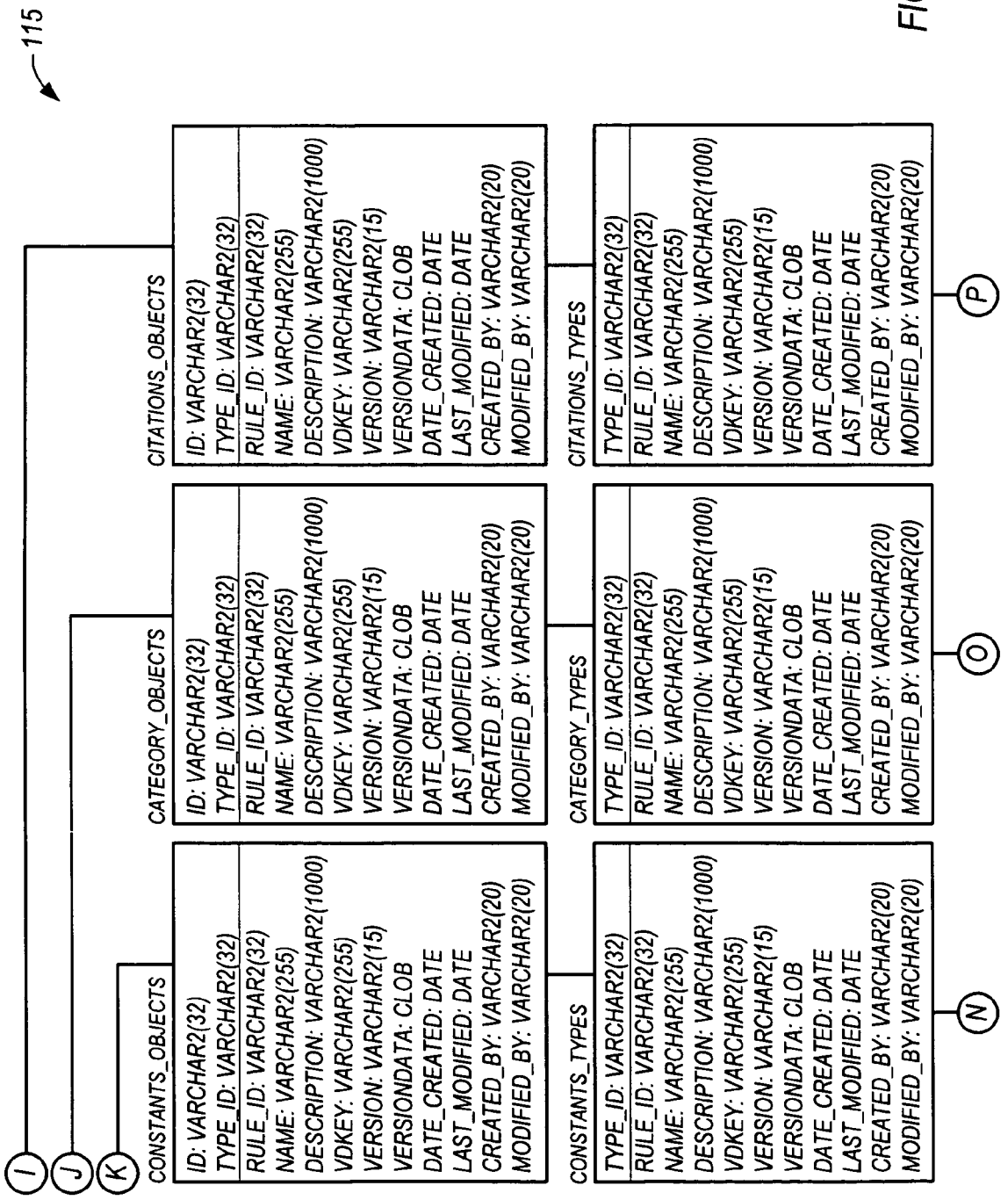
115
I
J
K
CONSTANTS_OBJECTS
ID: VARCHAR2(32)
TYPE_ID: VARCHAR2(32)
RULE_ID: VARCHAR2(32)
NAME: VARCHAR2(255)
DESCRIPTION: VARCHAR2(1000)
VDKEY: VARCHAR2(255)
VERSION: VARCHAR2(15)
VERSIONDATA: CLOB
DATE_CREATED: DATE
LAST_MODIFIED: DATE
CREATED_BY: VARCHAR2(20)
MODIFIED_BY: VARCHAR2(20)
CATEGORY_OBJECTS
ID: VARCHAR2(32)
TYPE_ID: VARCHAR2(32)
RULE_ID: VARCHAR2(32)
NAME: VARCHAR2(255)
DESCRIPTION: VARCHAR2(1000)
VDKEY: VARCHAR2(255)
VERSION: VARCHAR2(15)
VERSIONDATA: CLOB
DATE_CREATED: DATE
LAST_MODIFIED: DATE
CREATED_BY: VARCHAR2(20)
MODIFIED_BY: VARCHAR2(20)
CITATIONS_OBJECTS
ID: VARCHAR2(32)
TYPE_ID: VARCHAR2(32)
RULE_ID: VARCHAR2(32)
NAME: VARCHAR2(255)
DESCRIPTION: VARCHAR2(1000)
VDKEY: VARCHAR2(255)
VERSION: VARCHAR2(15)
VERSIONDATA: CLOB
DATE_CREATED: DATE
LAST_MODIFIED: DATE
CREATED_BY: VARCHAR2(20)
MODIFIED_BY: VARCHAR2(20)
CONSTANTS_TYPES
TYPE_ID: VARCHAR2(32)
RULE_ID: VARCHAR2(32)
NAME: VARCHAR2(255)
DESCRIPTION: VARCHAR2(1000)
VDKEY: VARCHAR2(255)
VERSION: VARCHAR2(15)
VERSIONDATA: CLOB
DATE_CREATED: DATE
LAST_MODIFIED: DATE
CREATED_BY: VARCHAR2(20)
MODIFIED_BY: VARCHAR2(20)
N
CATEGORY_TYPES
TYPE_ID: VARCHAR2(32)
RULE_ID: VARCHAR2(32)
NAME: VARCHAR2(255)
DESCRIPTION: VARCHAR2(1000)
VDKEY: VARCHAR2(255)
VERSION: VARCHAR2(15)
VERSIONDATA: CLOB
DATE_CREATED: DATE
LAST_MODIFIED: DATE
CREATED_BY: VARCHAR2(20)
MODIFIED_BY: VARCHAR2(20)
O
CITATIONS_TYPES
TYPE_ID: VARCHAR2(32)
RULE_ID: VARCHAR2(32)
NAME: VARCHAR2(255)
DESCRIPTION: VARCHAR2(1000)
VDKEY: VARCHAR2(255)
VERSION: VARCHAR2(15)
VERSIONDATA: CLOB
DATE_CREATED: DATE
LAST_MODIFIED: DATE
CREATED_BY: VARCHAR2(20)
MODIFIED_BY: VARCHAR2(20)
P

FIG. 7C

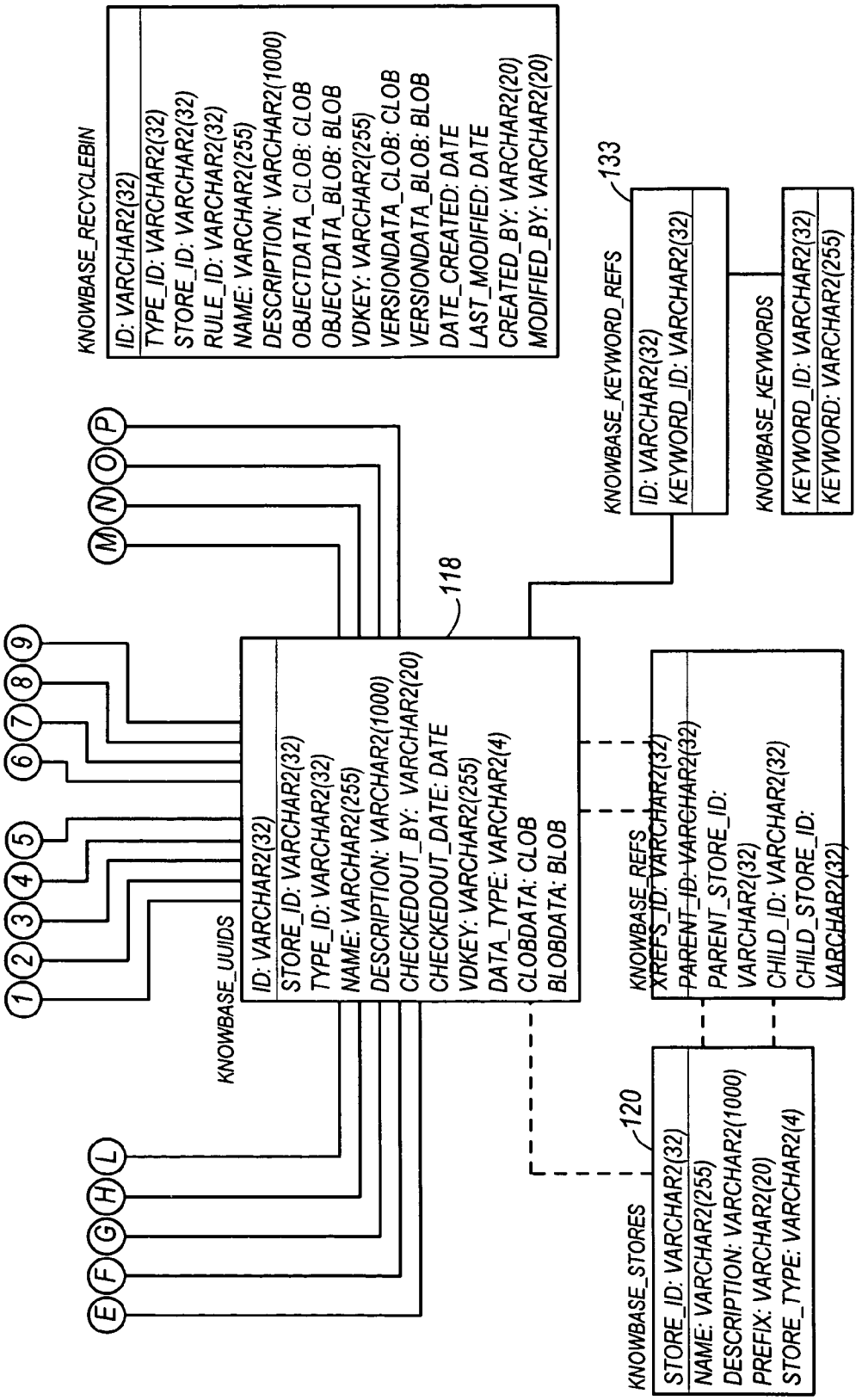
115
KNOWBASE_RECYCLEBIN
ID: VARCHAR2(32)
TYPE_ID: VARCHAR2(32)
STORE_ID: VARCHAR2(32)
RULE_ID: VARCHAR2(32)
NAME: VARCHAR2(255)
DESCRIPTION: VARCHAR2(1000)
OBJECTDATA_CLOB: CLOB
OBJECTDATA_BLOB: BLOB
VDKEY: VARCHAR2(255)
VERSIONDATA_CLOB: CLOB
VERSIONDATA_BLOB: BLOB
DATE_CREATED: DATE
LAST_MODIFIED: DATE
CREATED_BY: VARCHAR2(20)
MODIFIED_BY: VARCHAR2(20)
133
KNOWBASE_KEYWORD_REFS
ID: VARCHAR2(32)
KEYWORD_ID: VARCHAR2(32)
KNOWBASE_KEYWORDS
KEYWORD_ID: VARCHAR2(32)
KEYWORD: VARCHAR2(255)
118
KNOWBASE_UUIDS
ID: VARCHAR2(32)
STORE_ID: VARCHAR2(32)
TYPE_ID: VARCHAR2(32)
NAME: VARCHAR2(255)
DESCRIPTION: VARCHAR2(1000)
CHECKEDOUT_BY: VARCHAR2(20)
CHECKEDOUT_DATE: DATE
VDKEY: VARCHAR2(255)
DATA_TYPE: VARCHAR2(4)
CLOBDATA: CLOB
BLOBDATA: BLOB
KNOWBASE_REFS
XREFS_ID: VARCHAR2(32)
PARENT_ID: VARCHAR2(32)
PARENT_STORE_ID: VARCHAR2(32)
CHILD_ID: VARCHAR2(32)
CHILD_STORE_ID: VARCHAR2(32)
120
KNOWBASE_STORES
STORE_ID: VARCHAR2(32)
NAME: VARCHAR2(255)
DESCRIPTION: VARCHAR2(1000)
PREFIX: VARCHAR2(20)
STORE_TYPE: VARCHAR2(4)
1 2 3 4 5 6 7 8 9
E F G H L
M N O P

FIG. 7D

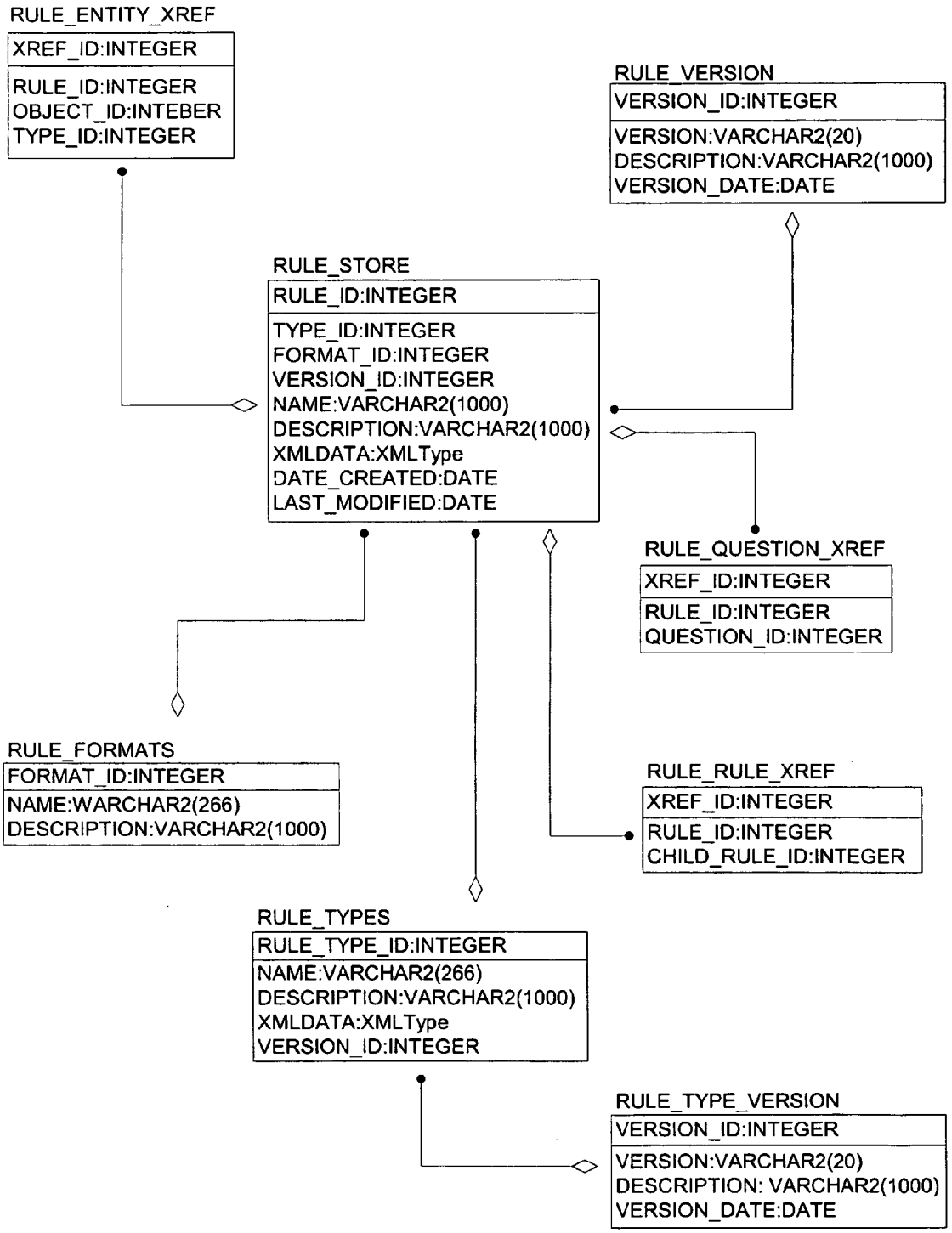
RULE_ENTITY_XREF
XREF_ID:INTEGER
RULE_ID:INTEGER
OBJECT_ID:INTEBER
TYPE_ID:INTEGER
RULE_VERSION
VERSION_ID:INTEGER
VERSION:VARCHAR2(20)
DESCRIPTION:VARCHAR2(1000)
VERSION_DATE:DATE
RULE_STORE
RULE_ID:INTEGER
TYPE_ID:INTEGER
FORMAT_ID:INTEGER
VERSION_ID:INTEGER
NAME:VARCHAR2(1000)
DESCRIPTION:VARCHAR2(1000)
XMLDATA:XMLType
DATE_CREATED:DATE
LAST_MODIFIED:DATE
RULE_QUESTION_XREF
XREF_ID:INTEGER
RULE_ID:INTEGER
QUESTION_ID:INTEGER
RULE_FORMATS
FORMAT_ID:INTEGER
NAME:WARCHAR2(266)
DESCRIPTION:VARCHAR2(1000)
RULE_RULE_XREF
XREF_ID:INTEGER
RULE_ID:INTEGER
CHILD_RULE_ID:INTEGER
RULE_TYPES
RULE_TYPE_ID:INTEGER
NAME:VARCHAR2(266)
DESCRIPTION:VARCHAR2(1000)
XMLDATA:XMLType
VERSION_ID:INTEGER
RULE_TYPE_VERSION
VERSION_ID:INTEGER
VERSION:VARCHAR2(20)
DESCRIPTION: VARCHAR2(1000)
VERSION_DATE:DATE

Fig. 8

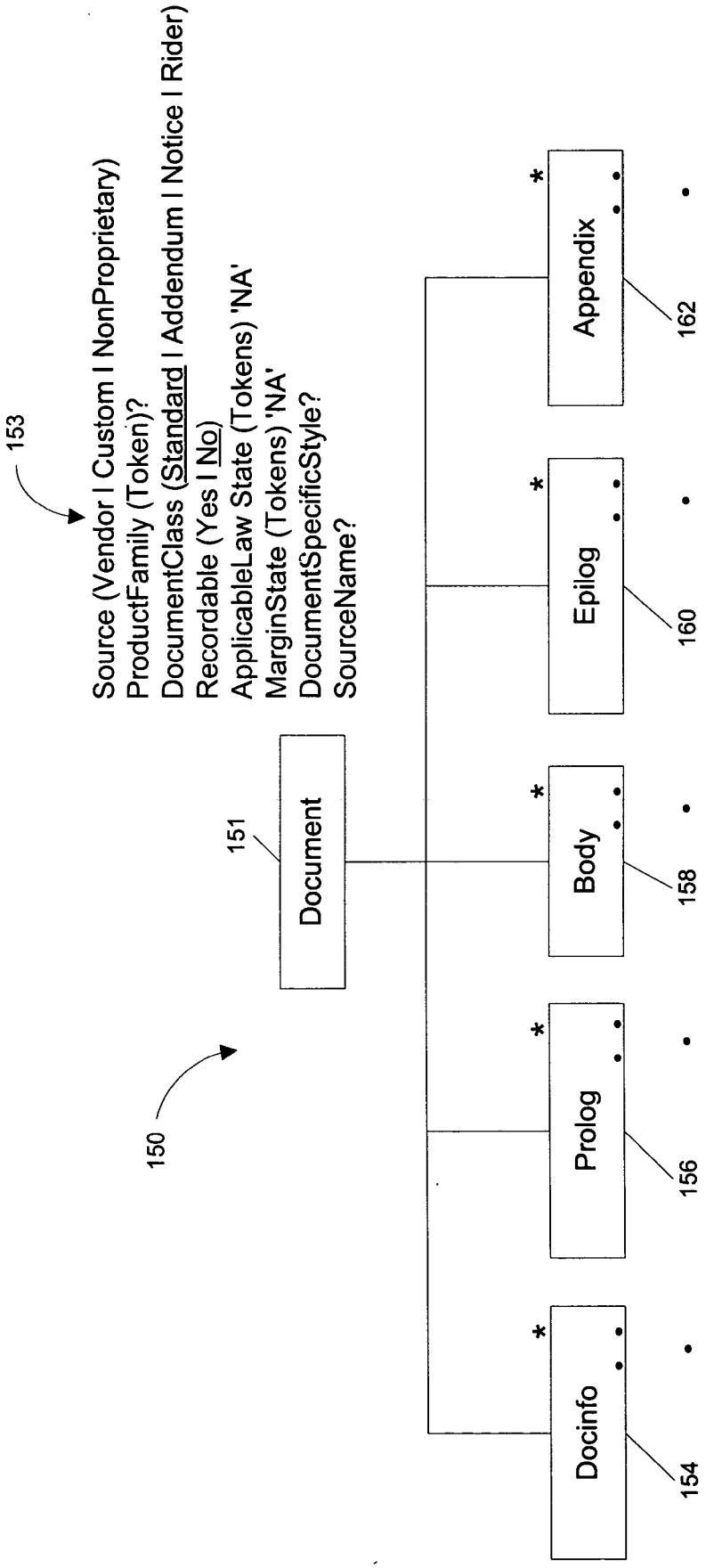
153
Source (Vendor I Custom I NonProprietary)
ProductFamily (Token)?
DocumentClass (Standard I Addendum I Notice I Rider)
Recordable (Yes I No)
ApplicableLaw State (Tokens) 'NA'
MarginState (Tokens) 'NA'
DocumentSpecificStyle?
SourceName?
150
151
Document
Docinfo
Prolog
Body
Epilog
Appendix
154
156
158
160
162
*

Fig. 9

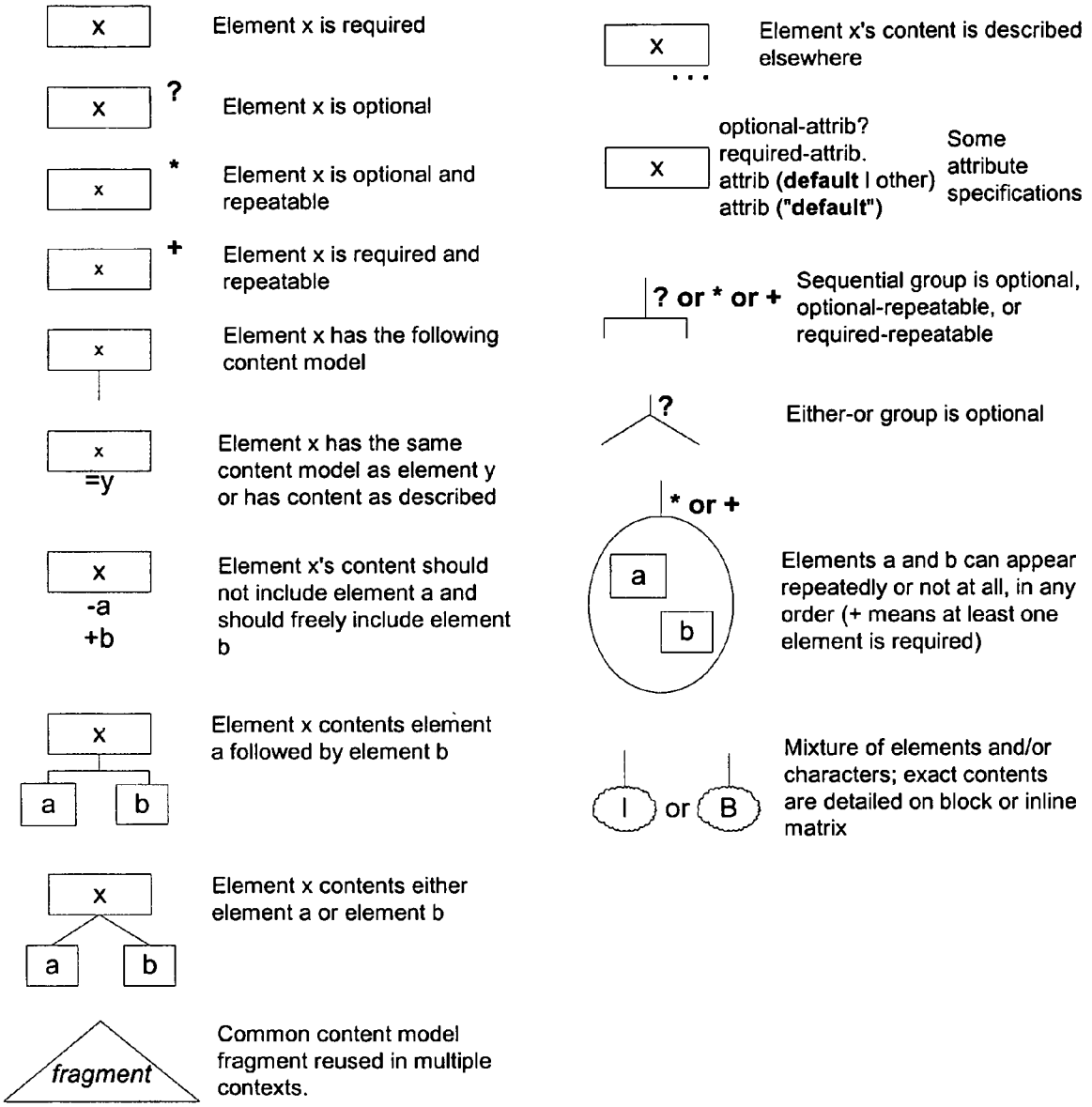

#PCDATA	**Characters plus entities and possibly elements**
RCDATA	**Characters plus entities**
CDATA	**Characters only, or string for attribute value**
ENTITY	**Entity reference for attribute value**
ID	**Unique identifier within document**
IDREF	**Reference to identifier declared within document**
EMPTY	**Element cannot have any content**

Fig. 10

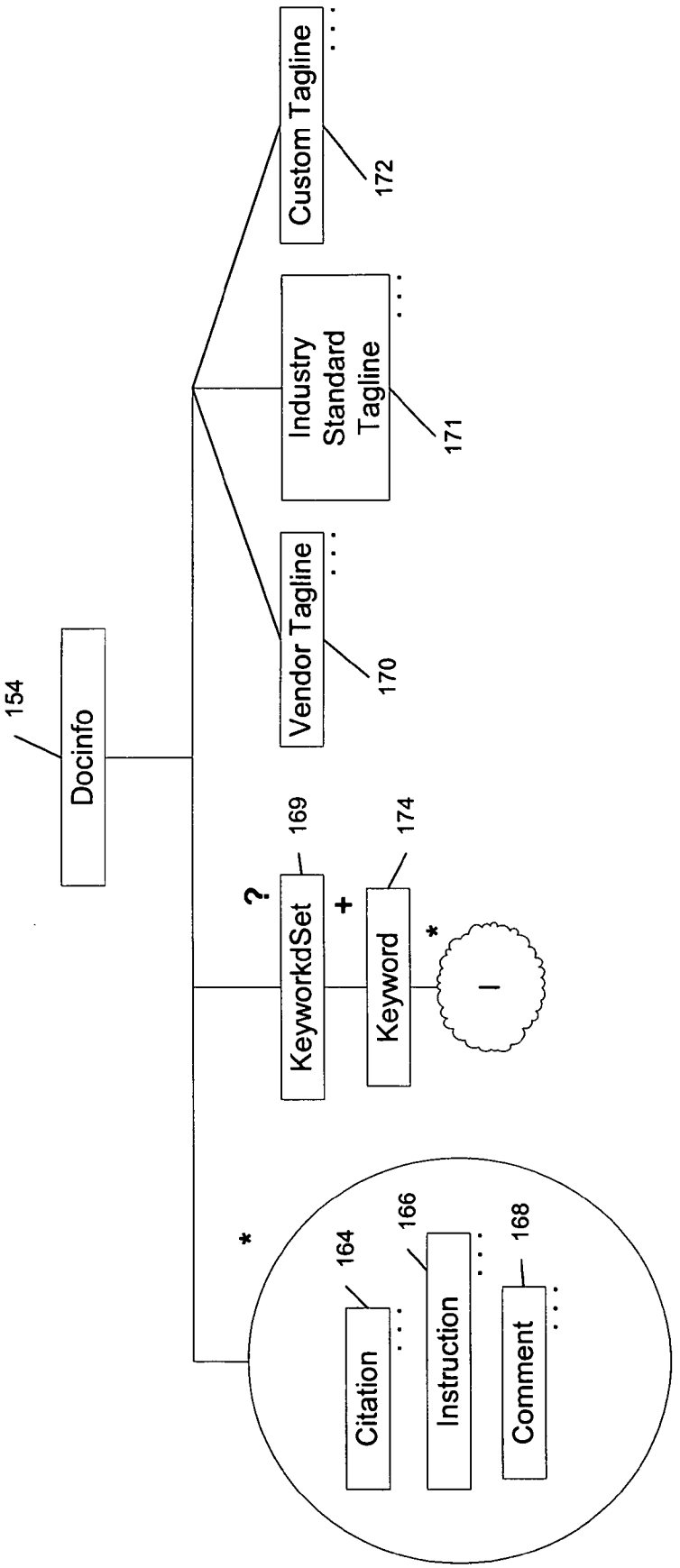
154
Docinfo
Vendor Tagline
170
Industry Standard Tagline
171
Custom Tagline
172
?
KeyworkdSet
169
+
Keyword
174
*
1
*
Citation
164
Instruction
166
Comment
168

Fig. 11

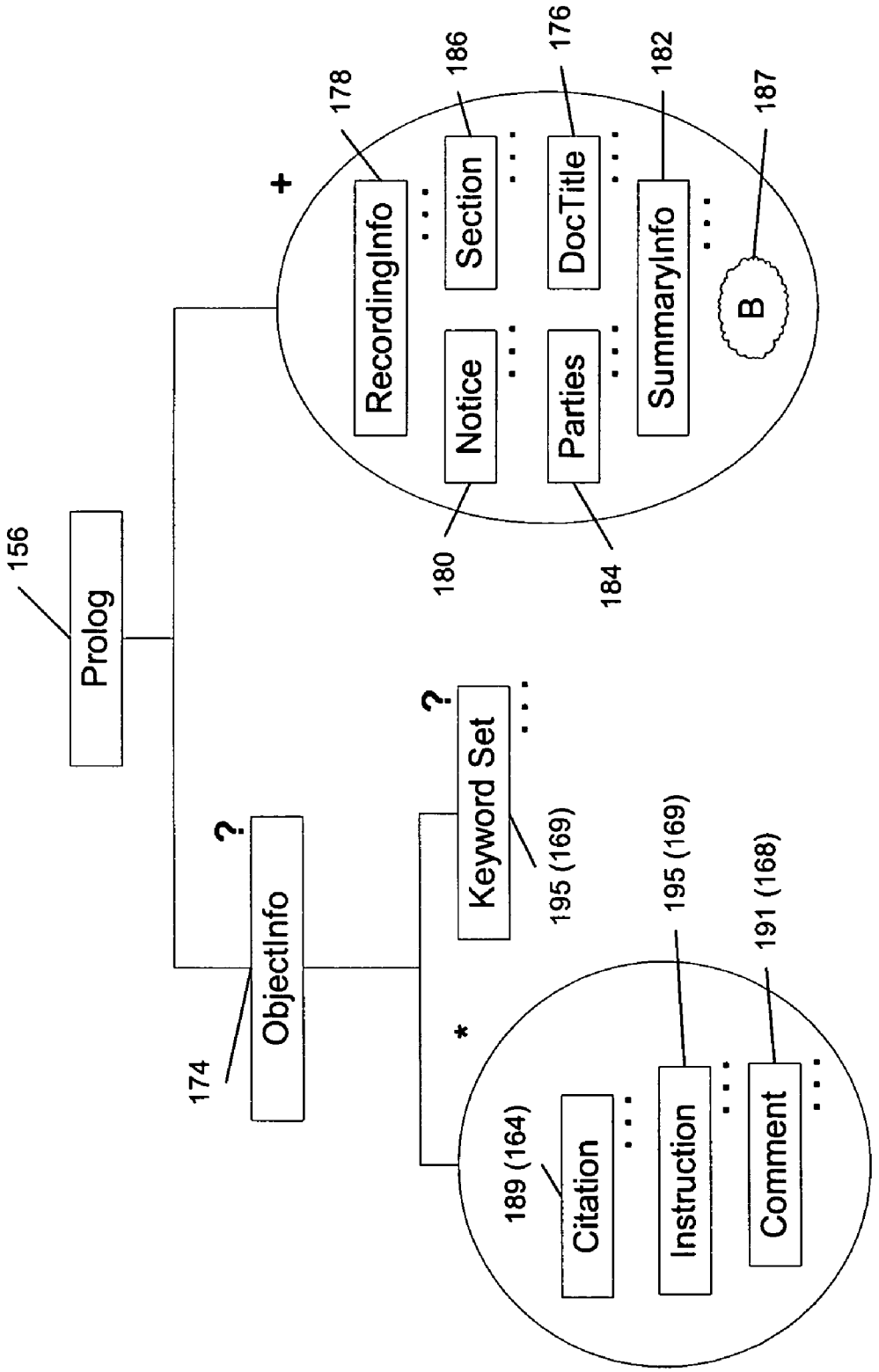
156
Prolog
+
178
RecordingInfo
180
Notice
186
Section
184
Parties
176
DocTitle
182
SummaryInfo
187
B
?
174
ObjectInfo
?
Keyword Set
195 (169)
*
189 (164)
Citation
195 (169)
Instruction
191 (168)
Comment

Fig. 12

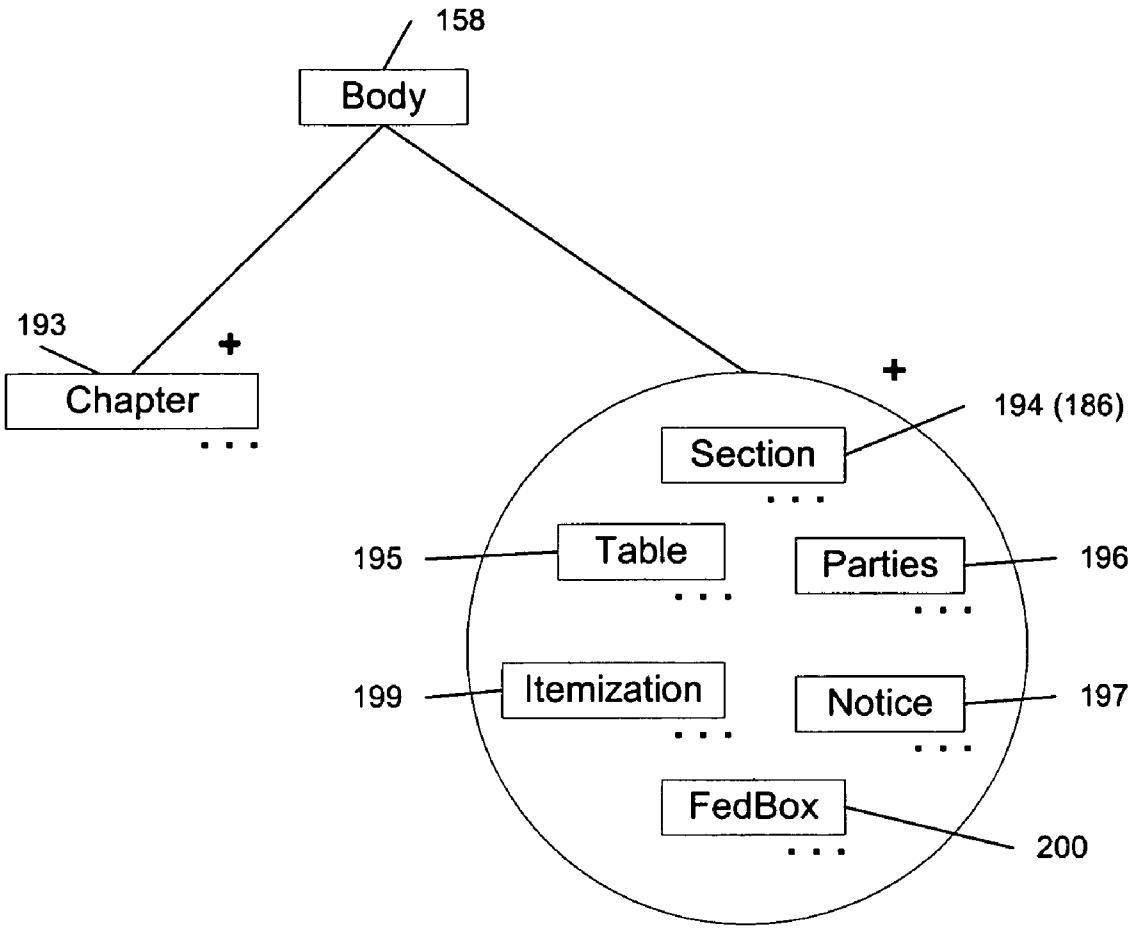
158
Body
193
Chapter
194 (186)
Section
195
Table
Parties
196
199
Itemization
Notice
197
FedBox
200

Fig. 13

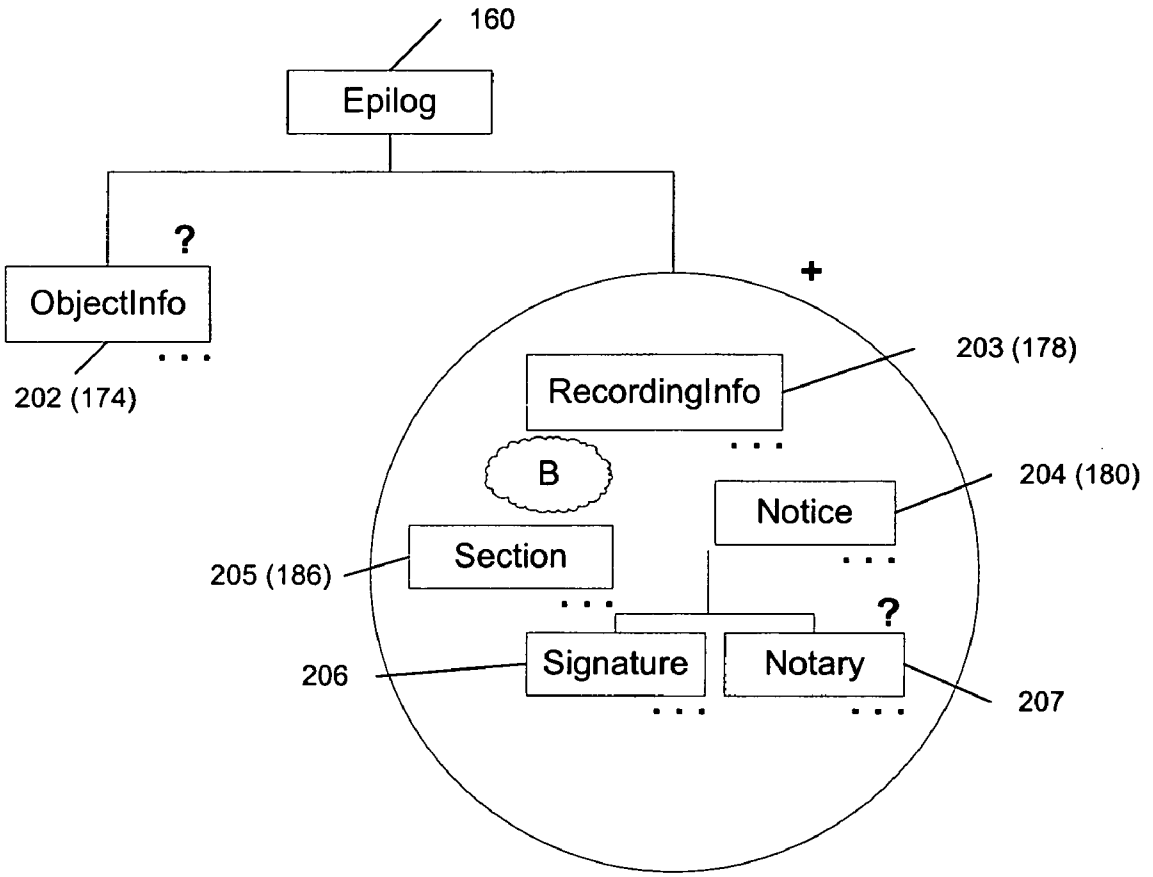
160
Epilog
?
ObjectInfo
202 (174)
+
RecordingInfo
203 (178)
B
Notice
204 (180)
Section
205 (186)
?
Signature
Notary
206
207

Fig. 14

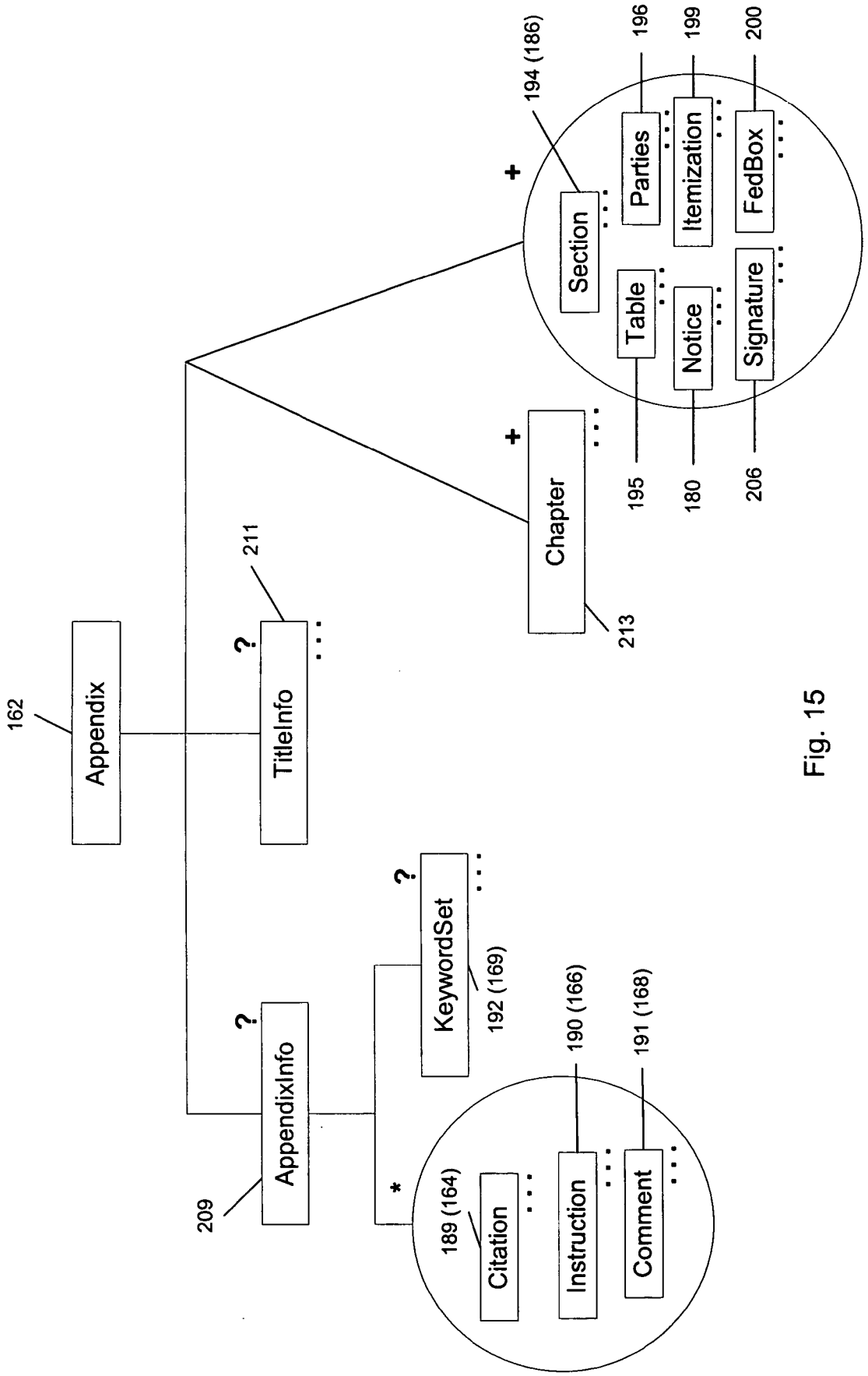
162
Appendix
?
211
TitleInfo
...
?
209
AppendixInfo
?
KeywordSet
...
192 (169)
*
189 (164)
Citation
...
190 (166)
Instruction
...
191 (168)
Comment
...
+
Chapter
...
213
+
194 (186)
Section
...
Table
...
195
Parties
...
196
Notice
...
180
Itemization
...
199
Signature
...
206
FedBox
...
200

Fig. 15

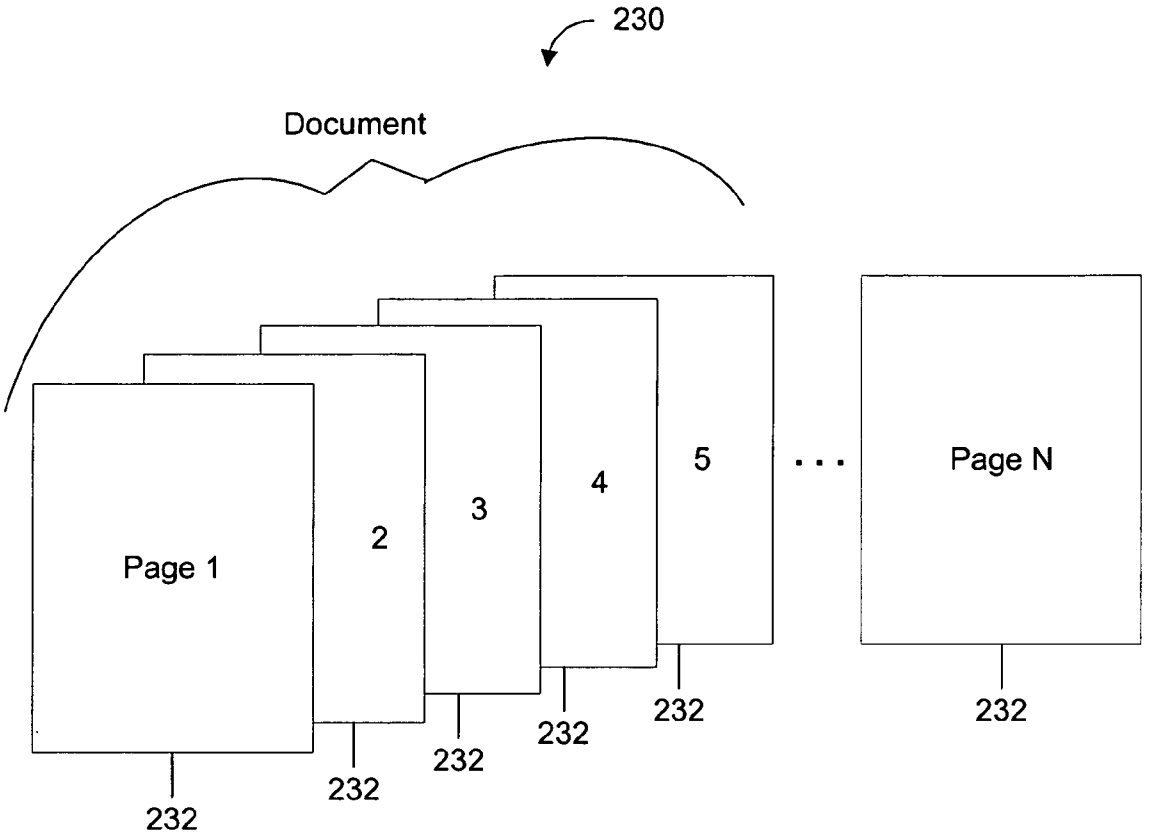

Fig. 16

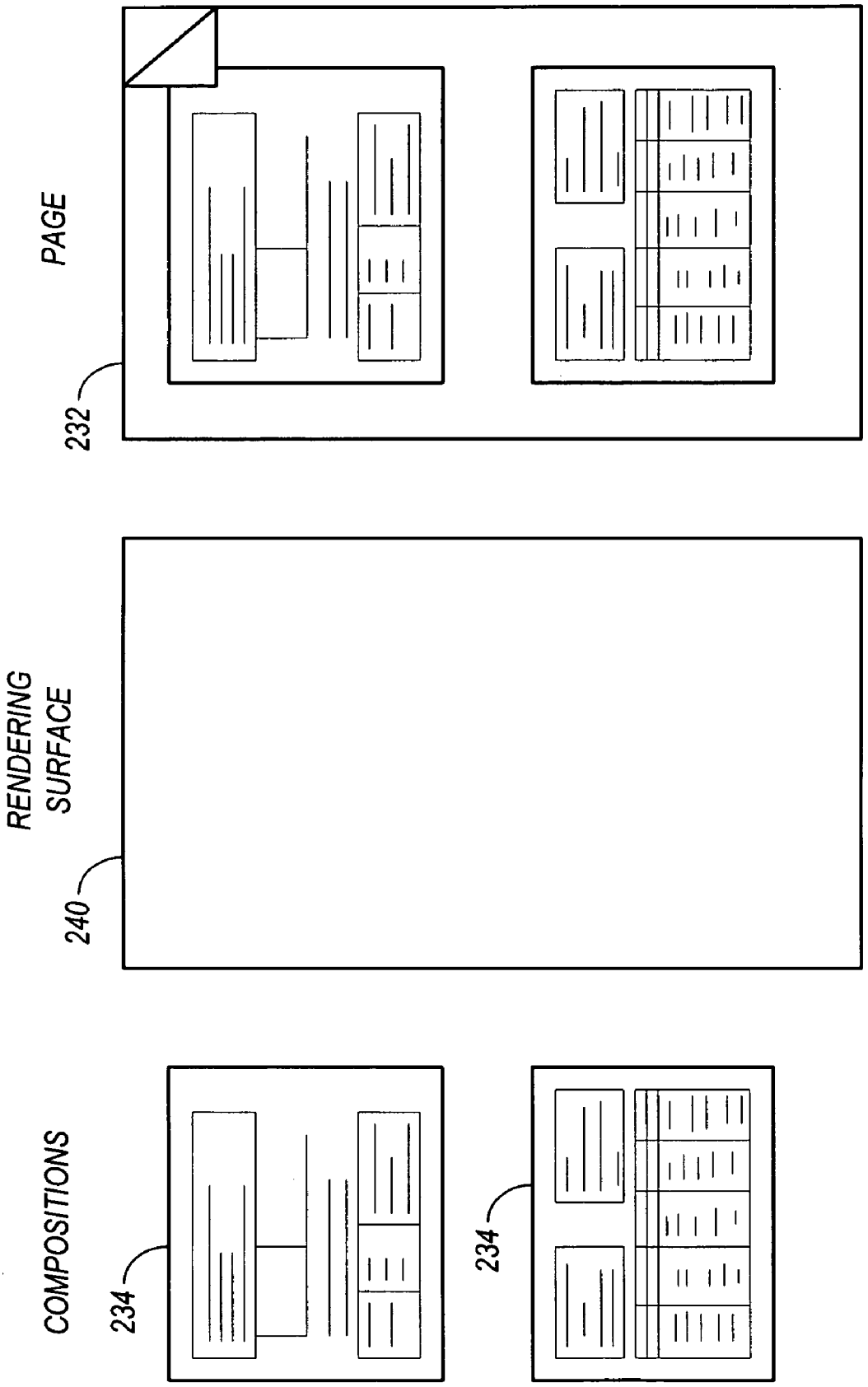

FIG. 17

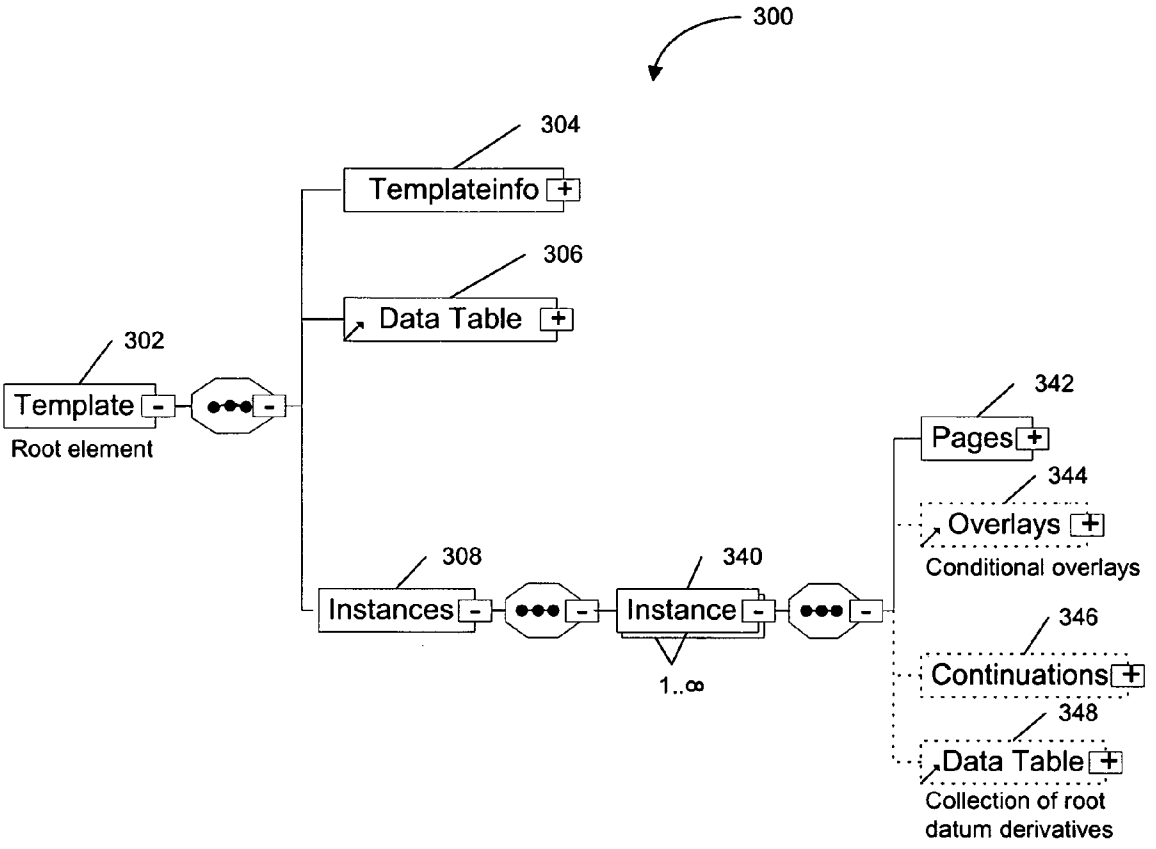
300
304
Templateinfo
306
Data Table
302
Template
Root element
342
Pages
344
Overlays
Conditional overlays
308
Instances
340
Instance
1..∞
346
Continuations
348
Data Table
Collection of root
datum derivatives

Fig. 18

SPREADSHEET

FILE EDIT VIEW INSERT FORMAT TOOLS DATA WINDOW HELP ACROBAT

NORMAL 100%

A1 = TEMPLATE ID

	B				
1	ELEMENT_DICTID	DICT_NAME	MULTI_VALUED	ELEMENT_INDEX	FORM_FIELDNAME
2	1016	LOANDETAILSDepositAmount	0	1	LN_DpstAmt_$TWC
3	709	LOANDETAILSLenderCaseNumber	0	1	SC_FileNum
4	377	LOANDETAILSLoanAmount	0	1	LN_Amt_$TMC
5	602730	LT-BORROWER.Borr1stpage_namesfortrust_MR	0	1	BW_Names
6	600504	LT-BORROWER.Mail-VS-Borr-Addr-2Line_MR	0	1	BW1_Addr
7	600007	LT-FHA-VA.AGENCY-NBR_MR	0	1	LN_AgncyCaseNum
8	600001	LT-MASTER.CLOS-DT-VS-EX-CLOS-DT	0	1	CL_Date_DL
9	600573	LT-MASTER.ConvenInsured_CHK	0	1	LN_Convinsmc_CHK
10	600569	LT-MASTER.ConvenUninsured_CHK	0	1	LN_ConvUninsmc_CHK
11	600541	LT-MASTER.FHA_CHK	0	1	LN_FHA_CHK
12	600542	LT-MASTER.FmHA_CHK	0	1	LN_FmHA_CHK
13	600069	LT-MASTER.New-mtg-nbr	0	1	LN_AcctNum
14	600299	LT-MASTER.VA-RIDER_CHK	0	1	LN_VA_CHK
15	601870	LT-MISC-INFO.LENDER-ADDR2LINE_MR	0	1	LD_Addr
16	600019	LT-MISC-INFO.LENDER-COMPANY	0	1	LD_Name
17	600406	LT-MISC-INFO.SETTLE-ADDR_1LINE_MR	0	1	SA_Addr
18	600092	LT-MISC-INFO.SETTLE-COMPANY	0	1	SA_Name
19	602812	LT-MISC-INFO2.SETTLEPLACE_501B	0	1	SA_Loc

PAGE 1 PAGE 2

READY

FIG. 19

```
.
.
.
<DATATABLE>
 <rdCurrency Name="LOANDETAILSDepositAmount" DataID="1016">
  <Data>
    <Datum><Value/></Datum>
  </Data>
</rdCurrency>
 <rdText Name="LOANDETAILSLenderCaseNumber" DataID="709">
  <Data/>
 </rdText>
 <rdCurrency Name="LOANDETAILSLoanAmount" DataID="377">
  <Value/>
 </rdCurrency>
 <rdText Name="LT-BORROWER.Borr1stpage_namesfortrust_MR" DataID="602730">
  <Data/>
 </rdText>
.
.
.
</DataTable>
.
.
.
```

FIG. 20

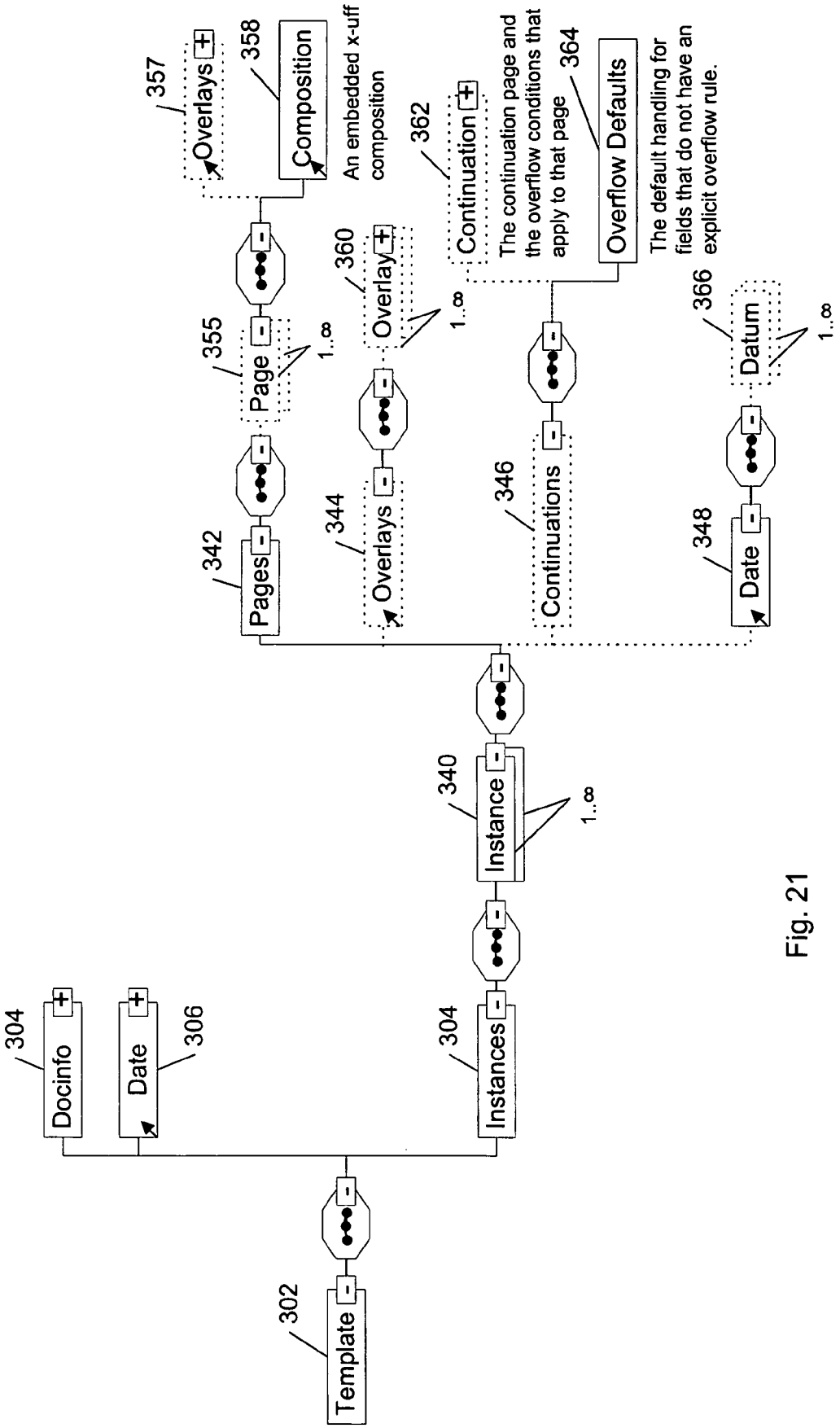
Template
302
Docinfo
304
Date
306
Instances
304
Instance
340
1..∞
Pages
342
Page
355
1..∞
Overlays
357
Composition
358
An embedded x-uff composition
Overlays
344
Overlay
360
1..∞
Continuations
346
Continuation
362
The continuation page and the overflow conditions that apply to that page
Overflow Defaults
364
The default handling for fields that do not have an explicit overflow rule.
Date
348
Datum
366
1..∞

Fig. 21

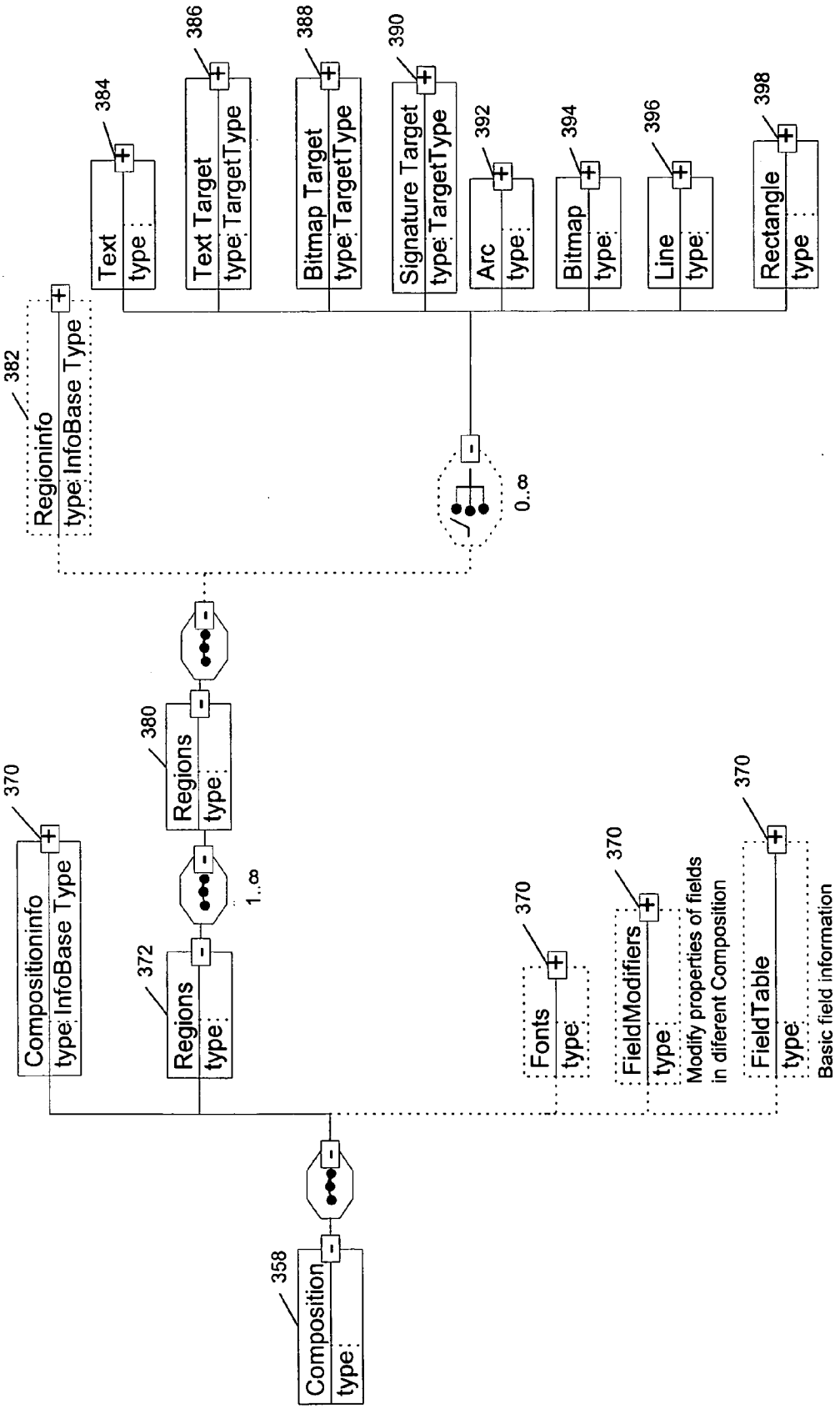
Text
type
384
Text Target
type TargetType
386
Bitmap Target
type TargetType
388
Signature Target
type TargetType
390
Arc
type
392
Bitmap
type
394
Line
type
396
Rectangle
type
398
Regioninfo
type InfoBase Type
382
0..8
Regions
type
380
1..8
Regions
type
372
Compositioninfo
type InfoBase Type
370
Fonts
type
370
FieldModifiers
type
370
Modify properties of fields
in diferent Composition
FieldTable
type
370
Basic field information
Composition
type
358

Fig. 22

DOCUMENT CREATION SYSTEM AND METHOD USING KNOWLEDGE BASE, PRECEDENCE, AND INTEGRATED RULES

[0001] This application claims priority to U.S. Provisional Patent Application No. 60/542,076, filed on Feb. 4, 2004, and U.S. Provisional Patent Application No. 60/510,742, filed on Oct. 13, 2003.

BACKGROUND OF THE INVENTION

[0002] Embodiments of the invention relate to the creation of documents (such as contracts, forms, user manuals, instructional texts, and others). More particularly, embodiments of the invention relate to the creation of documents by assembling document components and applying precedence and rules to create a desired document.

[0003] Document production systems that insert customer-specific content into a pre-fabricated document are known. For example, in some known systems a boilerplate document is produced using word processing software. The boilerplate document is then reviewed and revised by a document developer, and stored in a storage device, such as a disk drive of a computer. The boilerplate document is then made available for use to an end-user, such as a bank or loan officer. The end-user retrieves the boilerplate document from the storage device and enters specific content into the document, such as names, addresses, prices, etc. Once the desired content is inserted into specified locations on the document, the completed form is printed.

[0004] Other document systems use a conventional relational database scheme to test specific input information against a table of rule sets which, in turn, are directly linked to various boilerplate clauses. For example, when working with insurance forms, a rule set is assigned to each insurance policy clause and each endorsement clause. The insurance and endorsement clauses and rule sets are stored in a memory coupled to the main processor. Each rule set includes at least one rule that must be satisfied in order to include the associated clause in the document. After entering customer-specific parameters into the computer, such as desired insurance coverages and the policy holder's state of residence, each and every rule in each and every rule set is evaluated to determine whether a particular clause is to be included in the document. In order to print a document, a printer database containing a redundant copy of each insurance and endorsement policy clause is utilized to supply the appropriate clauses.

[0005] Other known systems include those disclosed in U.S. Pat. No. 5,666,130 and U.S. Pat. No. 6,006,242. While these systems are different from one another in several ways, both systems use SGML (standard generalized markup language).

SUMMARY OF THE INVENTION

[0006] Although prior systems are functional, there remains a need for a document generation system that, among other things, can be integrated with existing front-end systems (such as loan generation systems) and existing back-end systems (such as existing printer servers and networks).

[0007] In one embodiment, the invention provides a document generation system that may be provided as a service, in the sense that the system fits between front-end systems (e.g., an existing command-line, loan processing system used by a bank) and a printing system (such as a printer server and printers that require information in a printer command language ("PCL") format). The system takes in information regarding the requirements (e.g., type of transaction, number of parties, amount of loan, price, governing law, etc.) of the document needed (e.g., a loan application, construction contract, etc.) and produces an appropriate form based on the input information.

[0008] The service provides a set of APIs to interface with the front-end software. Information from the front-end software is formatted according to a schema, such as an XML schema.

[0009] The service uses a knowledge base. In embodiments of the invention, the knowledge base is based on an object relational model rather than a relational database model, and every object or table in the object relational model may have at most one parent. In some embodiments, the knowledge base includes document components, such as, sections, paragraphs, and sentences. These components may be structured according to a markup language such as XML (extensible markup language) and include labels or tags that associate them with particular entities. For example, all Texas branches of a bank (which we will assign the fictitious name "SecondNationWide Bank") are associated with an identifier for that bank. The documents include embedded rules that are structured according to a rules markup language. For example, a rule might take a form similar to "If applicable law state=NY, add NY consumer protection clause." The information regarding the requirements of the needed document is sent to a document assembler. The requirements include an identifier of the party making the request for the document, for example, the Dallas, Texas branch of SecondNationWide Bank.

[0010] The document assembler also receives transaction information (e.g., the amount of a loan) from a transaction data set. The document assembler pulls document components from the knowledge base that meet the requirements delivered to the document assembler. The document assembler executes rules as it encounters them. In the event that the document assembler encounters two or more components in the knowledge base that meet the requirements of the needed document, the assembler chooses the document component according to the identity of the entity requesting the document, or, if no matching component is found, according to the identity of one of the entity's parents or ancestors. If no match is found, a default component is provided. This concept is referred to as "precedence" or "owner precedence."

[0011] As is apparent from the above, it is an advantage of the present invention to provide methods and systems of creating documents. Other features and advantages of the present invention will become apparent by consideration of the detailed description and accompanying drawings.

BRIEF DESCRIPTION OF THE DRAWINGS

[0012] In the drawings:

[0013] **FIG. 1** is a schematic illustration of a system of one exemplary embodiment of the invention.

[0014] **FIG. 2** is a schematic illustration of the relationships of an application or system (front and back end), a

FOLEON EX1005
IPR2026-00404

service implementing an embodiment of the invention, and an exemplary knowledge base.

[0015] **FIG. 3** is an illustration of the communication between an origination system (or front end), an integration framework or engine, a knowledge base, and an authoring system.

[0016] **FIG. 4** is an illustration of an exemplary knowledge base and flows of information used to populate the knowledge base.

[0017] **FIG. 4A** is an illustration of a system of one exemplary embodiment of the invention.

[0018] **FIG. 5** is an illustration of an exemplary document selection process.

[0019] **FIG. 6** is an illustration of the consequences of applying precedence.

[0020] **FIGS. 7A-7D** comprise a schematic illustration of a database model for a knowledge base used in embodiments of the invention.

[0021] **FIG. 8** is a schematic illustration of a model for rule stores.

[0022] **FIG. 9** is a tree diagram of the architecture of a dynamic document.

[0023] **FIG. 10**. illustrates a key for tree diagrams included herein.

[0024] **FIG. 11** illustrates the architecture of a document information element.

[0025] **FIG. 12** illustrates the architecture of a prolog element.

[0026] **FIG. 13** illustrates the architecture of a body element.

[0027] **FIG. 14** illustrates the architecture of an epilog element.

[0028] **FIG. 15** illustrates the architecture of an appendix element.

[0029] **FIG. 16** illustrates an exemplary static document that has a plurality of pages.

[0030] **FIG. 17**. illustrates laying of compositions on a rendering surface to create a page.

[0031] **FIG. 18** illustrates an architecture for a static document.

[0032] **FIG. 19** illustrates an exemplary data table that may be used in an instantiation of a static document.

[0033] **FIG. 20** illustrates exemplary XML code for a portion of the data table shown in **FIG. 19**.

[0034] **FIG. 21** illustrates the architecture of an instances element.

[0035] **FIG. 22** illustrates the architecture of a composition element.

DETAILED DESCRIPTION

[0036] Before embodiments of the invention are explained in detail, it is to be understood that the invention is not limited in its application to the details of the construction and the arrangements of the components set forth in the following description or illustrated in the drawings. The invention is capable of still other embodiments and of being practiced or being carried out in various ways. Also, it is to be understood that the phraseology and terminology used herein is for the purpose of description and should not be regarded as limiting. Further, it is assumed that the reader has at least a rudimentary understanding of markup languages, such as SGML, and working knowledge of XML.

[0037] **FIG. 1** illustrates an exemplary system **10** of one embodiment of the invention. The system **10** includes an origination platform **12**, an application programming interface ("API") gateway **14**, a document selection engine **16**, an output of or listing of documents **18**, an editing module or interface **20**, and a document generation module **22**, or more broadly, an assembly facility.

[0038] The origination platform **12** represents a front-end system such as a loan origination system, customer data collection system, or other system used to collect data to be included in one or more desired documents. In addition, the origination platform **12** provides information regarding the type of document needed or required for the situation at hand. In many circumstances, the origination platform **12** will be a legacy system, meaning that it is a system that has been used for a relatively long period of time for the purpose of collecting information relevant to a transaction or document need.

[0039] The origination platform **12** communicates with an interface, which in one embodiment of the invention takes the form of an API gateway. In one embodiment of the invention, the gateway **14** is designed to receive and transmit information that is structured according to one or more XML schemas. The gateway **14** delivers information to the document selection module or engine **16**. The document selection module **16** interacts with a knowledge base (discussed below) to create a set of documents that, based on the input data from the origination platform, match or satisfy (at least to some level or degree) the requirements of the transaction. If desired, the document selection engine **16** may return the listing of documents **18** to the origination platform for display in a graphical user interface ("GUI") (not shown) presented to a user such that the user may choose to modify the list of documents in the editing module **20**. For example, a transaction might typically require a form for a cosigner to execute. However, in circumstances where the primary borrower has sufficient creditworthiness, a cosigner may not be required. In that case, the user of the system **10** may delete the cosigner document from the listing of documents **18** using the editing module **20**.

[0040] The listing of documents **18** (as edited, as the case may be) is delivered to the document generation module **22**. As shown in **FIG. 1**, the document generation module **22** performs four basic functions. The document generation module **22** validates incoming data (as is represented by a validation module **24**), applies precedence (as is represented by precedence module **26**), applies rules to the content (as is represented by a rules application module **28**), and performs document assembly (as is represented by an assembly module **30**). Each of these operations will be discussed in greater detail below. Once the appropriate documents are assembled, the system **10** reviews them to ensure that they are complete. For example, if the amount of a loan has not

been specified in the input data originally provided by the origination platform **12**, a question module **32** queries the origination platform **12** to request needed information or data **34**. A requirement for data **34** is added to a set of response messages that is returned to the client along with the assembled documents. The process continues even if all required information is not available or is invalid.

[**0041**] **FIG. 5** illustrates the process of document selection in greater detail. For example, if a transaction will take place in the state of Texas, Texas data **36** is input into origination platform **12** (which is illustrated as a loan origination system). Processing of the data and information in the document generation module **22** results in the documents required to complete the Texas transaction, as shown by the set of documents **37**. Likewise, if a transaction will take place in California, California data **38** is input into the origination platform **12** and processing results in the documents required to complete the California transaction, as shown by the set of documents **39**.

[**0042**] The completed and assembled document or documents are each resolved to an XML file as shown in block **40** (**FIG. 1**). Style sheets or other formatting mechanisms are applied, as shown by block **42**, and an output file (or document) is generated. The output file (or document) may be in one of a variety of file formats as is illustrated by three exemplary file format blocks (or documents) **44**, **46**, and **48** (.pdf, HTML, and other).

[**0043**] **FIG. 2** illustrates one way of viewing the relationship between components in a system using aspects of embodiments of the invention. An application **50** (which may include both a front-end system and a back-end system) interacts with a service **52** (which is also shown as including components of the system **10** in **FIG. 1**). The service **52** obtains information from a knowledge base **54**. The knowledge base **54** includes rules **56** required to select and generate a document, a question set, or a style sheet; content **58** that makes up a document (the content may come from a user of the system **10** or a vendor of the service **52** and knowledge base **54**), questions **60** (such as supporting resources such as detailed information about data requirements) for a user interface, transactional information **61**, and organization-specific data **62** (i.e., information regarding the entity that is using the system **10**, such as a Bank, technical writing service, publishing company, etc.) that is common to all transactions.

[**0044**] **FIG. 3** illustrates how information is input into or stored in the knowledge base **54** (or more specifically the content **58** in the knowledge base **54**). Information may be delivered from the origination platform **12** through the gateway **14** (which in **FIG. 3** is shown as a simple object access protocol ("SOAP") API to the document generation module **22**. The document generation module **22** accesses knowledge base information via lower-level objects, as shown in block **70**. The lower-level objects, in turn, request information via stored procedures, as shown in block **72**, which may be incorporated in the knowledge base **54**. The knowledge base **54** also receives information from an authoring tool **74**, which interacts with a content management system **76**.

[**0045**] As best seen by reference to **FIG. 4**, the content management system **76** includes a content editor **78** (which could be, for example, a tool specifically designed to create XML content or even a simple text editor such Windows Notepad) and a content or data store **80**. The data store **80** includes objects **82** and rules and cross reference maps connecting objects, or more broadly, references **84**. In one embodiment of the invention, the rules take the form of rules markup created using an XML script or schema (or, more broadly, an architecture or namespace) and may be referred to as "xref" embedded rules.

[**0046**] In one embodiment of the invention, an XML schema is used to define a rules markup language. The schema identifies and declares logical relationships in documents. In the exemplary schema, rules are identified by the namespace prefix "rule." An example is set out below.

```
<Tag>
  <rule:Condition ConditionType="EQ" Name="isMinnesota">
    <rule:Description>Sample condition compares ApplicableLawState
to 'MN'
    </rule:Description>
    <rule:Arguments>
      <rule:ExternalData EntityRef="ApplicableLawState"/>
      <rule:Constant>MN</rule:Constant>
    </rule:Arguments>
  </rule:Condition>
</Tag>
```

[**0047**] In an exemplary implementation of the rules markup language, each element in the markup language is described individually. An element may be described using a content model, and the available attributes and their meanings. Each element may be defined using a table of descriptive information such as the one below.

Element Name	RuleBase Type
Derives from	DatabaseObjectType
Can be contained by	
Content	EMPTY
Content Model	
Attributes	RuleType

[**0048**] "Element Name" is mandatory and is the name of the element. "Derives from" may be inapplicable to the element (if it is a root-level element, for example) or the name of another element if an element derives from another element. An element that is derived from another element can have any attributes defined for the parent element as well as its own set of attributes.

[**0049**] "Content" describes what can be contained in the element. Possible values include:

[**0050**] EMPTY—if this element must always have no child elements.

[**0051**] Type—if this element can contain data, the "Content Model" will define the data type

[**0052**] Elements—if this element can contain other elements. The "Content Model" will specify which elements can be contained.

[**0053**] "Content Model" provides additional information about "Content" and is written in standard DTD notation; e.g. (+) indicates one or more, (?) indicates optional, (|) indicates alternatives, etc.

[0054] "Attributes" lists any attributes that can be specified for the element in addition to any derived from a parent element. If the element has any attributes, a table, such as the one below, may be used to describe those attributes.

Attribute Name	Data Type	Possible Values	Default Values
Name	NMTOKEN		Optional
Uuid	String		Optional

[0055] "Attribute Name" is the name of the attribute and is mandatory.

[0056] "Data Type" can be String, Integer, ID, NMTOKEN or NMTOKENS.

[0057] "Possible Values" lists any constants that have been defined for the attribute.

[0058] "Default Values" provides a place to record the default value for the attribute. If no default value has been specified in the schema, the constant "None" should be used. "None" is not, in preferred embodiments, a default value.

[0059] Using rules markup it is possible to define conditions (using a conditions element) and attach them to an XML element. In the exemplary embodiment, a condition is a Boolean logic structure that evaluates to true or false. It is also possible to define a choose structure (or choose element), which is a set of alternatives along with conditions for choosing an alternative in the set. Iterators (or iterators elements), a structure that specifies the dependency or repetition of content on or from the characteristics of transaction data, may also be defined. In addition, functions (or functions elements) may also be defined. Functions provide a way of specifying data manipulations or transformations.

[0060] Elements in the rules markup language may have one of several content ancestries. For example, in one embodiment it is possible for an element to inherit a database object type model. The database object type content model is an abstraction and, as noted, provides information about the type of information the element can hold. A database object type element can contain description and keyword child elements.

[0061] It is also possible for an element to inherit a rule base content model. Again, this is an abstraction. A rule base type element is derived from a database object type element and may include a number of possible attribute values, including an Xpath, external data or interface, and internal data or interface. An external interface element provides an interface between the rules and other data sources not available inside the document. It is used to identify data by name so that the data can be evaluated by the rules without requiring the rules to be aware of how the name will be resolved. A resolution of an external interface element may be a single value, a set, an XML DOM node, or an XML DOM list (DOM's are explained below).

[0062] An external interface element may have what is referred to as a param or parameter content model. The parameter element is used to provide additional information about an external interface element data request.

[0063] An external interface element may also have several attributes including an entity reference attribute and a return type attribute. An entity reference attribute is used to specify a named data item, such as the name of a borrower, loan amount, or applicable law state from the transaction data. A return type attribute specifies the type of storage object to be returned, such as XML, array, string, number, etc.

[0064] The content management system **76** interacts with the knowledge base **54** (again, more specifically the content **58**). As noted, the knowledge base **54** may include a number of stored procedures represented (in **FIG. 4**) by block **90**. A press process (represented by block **92**) in conjunction with the stored procedures **90** takes information from the content management system **80** and stores the information such that individual rules are associated with individual objects. Objects are stored along with cross reference maps as shown in block **94**. As a consequence, the content (objects) stored in the knowledge base **54** includes data elements, rules, and language (actual text or content of a document). A data element is a construct that may include rules and text. The content is used, for example, as described with respect to **FIG. 1**, to create documents such as the documents **44**, **46**, and **48**.

[0065] The press process **92** may be aware of multiple schemas, DTDs, or other file formats or architectures. In the embodiment shown, the process of creating or populating the knowledge base **54** includes the pairing of XML content or information with a schema, DTD, or the like. If an object **82** created via the content management system **76** conforms to one of the architectures known to the press process **92**, it is inserted or stored in the database via the stored procedures **90**, as shown in block **94**. The stored procedures **90** allow for consistent manipulation of the knowledge base **54**. The knowledge base **54** can store XML, binary, and other objects. In part, this is due to the structure of the knowledge base **54** (discussed in more detail with reference to **FIGS. 7A-7D**) which reduces or limits responsibilities of the database or knowledge base **54**, in the sense that attributes are tracked with the database rather than individual objects.

[0066] **FIG. 4A** provides another illustration of the system **10**. A user **96** interacting with the origination platform **12** enters transaction data **61** (which may include, for example, a transaction identifier) which is delivered via the API gateway **14** to the services **52**. Any data **34** that is required by the services **52** (such as data requested by the data requirements or questions module **34**) is sent back to the origination platform **12** via the API gateway **14**. The assembly module **30** retrieves data or content and rules from the knowledge base **54** and assembles the content to create documents (such as documents **44**, **46**, and **48**). Content for the knowledge base **54** may be generated by an author **97** using the authoring tool **74** to populate a content store (such as the content **58**). Content from the content store is delivered to the knowledge base **54** via the press process **92**. Content may also be retrieved from other sources **98**, such as legacy databases, other databases, or applications. Various APIs **99A** and **99B** may be used to transfer the data in the other sources **98** either to populate the content store **58** or to be sent directly to the knowledge base **54**.

[0067] As noted above, embodiments of the invention implement or follow a precedence when assembling document components into a document. In embodiments of the invention, precedence provides a hierarchical control of

content to match business preferences. Precedence provides for customer or organization established hierarchies controlling how organization tailored content overrides are evaluated against alternatives, and the nesting of content to arbitrary depths within hierarchical relationships. This concept is illustrated in **FIG. 6**, which illustrates a document **100** including various components, such as a section **102**, paragraphs **104**, and sentences **106**. **FIG. 6** also illustrates two component assemblies, an assembly **108** and an assembly **110**, and a piece of override content **112**. The component assembly **108** represents a document that is assembled based upon the default rules in the knowledge base **54**. The component assembly **110** represents a document assembled using precedence, resulting in the exclusion of components **114** and **116** of component assembly **108** and the inclusion of component **112**.

[**0068**] Precedence may be further understood through an example. An institution such as a bank or credit union (e.g., our fictitious SecondNationWide Bank) may have different lines of business (lending, home equity, etc.). Within a given line of business (like lending), the institution may offer different products and services, such as those it offers commercial enterprises and those that it offers to consumers. Different documents are used for transactions that make up those products and services. The situation may be modeled with a tree diagram, such as the one below.

```
Root (Document Generation Software Vendor)
    Institution (SecondNationWide Bank)
        Lending
            Commercial
                Credit Application
            Consumer
                Credit Application
        Home Equity
            Credit Application
```

[**0069**] Using the precedence concepts explained herein, the above-illustrated tree can be applied to an element within a document. For example, in a consumer-lending document, the "boilerplate" content may be the content provided by the document generation system software vendor. However, the software user, for example, SecondNationWide Bank, may wish to modify or override that content to suit its own needs. For example, the user may wish to change or replace paragraphs or sections, add content, etc. These overrides may happen at different levels (line of business vs. a specific product). Precedence acts like a series of transparencies that, when stacked, produce the correct document tree for the given document by looking at the elements that are "on top."

[**0070**] As is known, when XML documents are processed in an XML processor a document object model or DOM is created. As is also known, a DOM may be represented as a tree structure with a number of nodes. A node may be an element (such as a root element), processing instructions, an attribute, an attribute value, and namespaces. As a consequence, when a document component or, more broadly, a data structure configured according to embodiments of the invention is processed by an XML processor, processing begins at the root node (as with any other XML structure), which has the lowest precedence. Precedence is applied to override objects of low precedence with objects of higher precedence when applicable.

[**0071**] In some embodiments of the invention, implementing precedence requires that no content be duplicated (that is, content objects are reused), and that the content of the software vendor be read-only. When editing or overriding an object (assuming it's not locked or read-only to prevent editing), a new copy is created with a precedence level equal to or higher than the precedence of the original object. For example, a content editor at the institutional level may open a vendor-level object for editing, which would then create a new object with the vendor-object as a template. When saving, the editor would have the option to save the new object at the institutional, product line, product, etc. levels, but not at the read-only vendor level. When viewing the objects as in a tree structure, new copies of objects are placed in the tree at the same depth of the subject object or deeper.

[**0072**] Within a precedence level, the name attribute provides a unique key (no two objects can have the same value for their name attributes). This requirement is extended within the precedence concept by requiring that when an object is overridden or edited and placed at a new precedence level, the new object retains the same name as its precedence parent. Thus, object names are unique within a particular precedence level, and it is also possible to extract the precedence stack of an object (i.e., all objects with a particular name, yet at different precedence levels). As indicated, an object at any level can be locked, preventing any higher precedence levels from overriding or editing it.

[**0073**] When an object is edited or overridden at a particular precedence level, the new copy created is used for all documents at or below the given precedence level (unless edited or overridden again). In reference to the exemplary tree structure, given two documents at the institutional depth, one document cannot have a vendor-level element while another document has its institutional-level override (both documents would use the institutional-level override). Since editors select objects based on their name, when a particular object is selected, what is provided is the precedence version of the given object that is deepest in the precedence hierarchy, but not deeper than the position of the document being edited. Individual objects (at different precedence levels) should maintain their own version histories, as it is desirable to have the vendor update the base content and be able to propagate new versions (which replace the vendor objects, not any precedence overrides or modifications).

[**0074**] Precedence is based, in part, upon the hierarchy used in the knowledge base **54**. **FIGS. 7A-7D** illustrates an exemplary object relational data model **115** used in embodiments of the invention. As can be seen by reference to **FIGS. 7A-7D**, a unique user identifier table or object **118** (**FIG. 7D**) is the parent to the other tables or objects in the model. Among other attributes, in the embodiment shown the object **118** includes "clobdata" (character large object data) and "blobdata" (binary large object data). The object **118** is associated with a master stores table **120**, which includes a listing of the available stores in the knowledge base **54**. In the example shown, the stores include a rules object store **121** and a rules types store **122**; a content object stores **123** and a content types store **124**; as well as a dictionary objects store, dictionary types store, usage objects store, usage types store, systems objects store, systems types store, standards objects store, standard types store, constants object store,

FOLEON EX1005
IPR2026-00404

constants types store, category objects store, category types store, citations object store, and citation types store. The number and types of stores are application dependent although having separate content and rules stores **121**, **122**, and **123**, **124** provides advantages in some embodiments of the invention. Further, in the embodiment shown, the object/type table pairs (e.g., **121** and **122**) correspond to the XML schema and each type corresponds to an element in the schema. In other words, every element becomes a type within a store. A review of the model shows that at most each object has one parent and no more. The use of an object relational data structure rather than a conventional relational database means that the knowledge base may be implemented without the numerous tables (often one-hundred or more) and the complexity that comes with using so many tables in such conventional databases.

[**0075**] In embodiments of the invention, the rules **56** are structured in a decomposed fashion (see **FIG. 8**). An additional advantage of such a complimentary use of the object/relational paradigm is that rows in the relational tables (or object store) may contain a link to either an external object, or an internal binary or character object. Each binary or character object in a row may be composed of XML text fragments that can be processed to create a document. Each row is then cross referenced to another row within the same table structure to create a parent-child relationship without having to parse an XML tree during runtime processing. Cross reference tables (or bill of material structures) are created when the document objects are stored. This reduces or eliminates the requirement of having to open and interrogate each XML object prior to knowing if it needs to be included in the document. This allows for parent-child relationship re-assembly without reading each component.

[**0076**] Having described the exemplary system **10** and features of embodiments of the invention, additional details regarding various aspects of embodiments of the invention will now be provided.

[**0077**] In some embodiments of the invention, document content may be configured in one of several XML structures. One of these structures may be a package of document selection rules (such as rules **56**/**84**) used to determine a set of documents. Another structure may be a dynamic document that can resolve to one or more instances of a given document. A third structure may be a static document that is resolved to one or more static forms. A static document generally includes at least some content that is determined before and some content that is determined during the resolution process.

[**0078**] **FIG. 9** illustrates the architecture of a dynamic document **150** that can resolve to one or more instances. The diagram in **FIG. 9** is a tree diagram configured according to the key shown in **FIG. 10**. The architecture of dynamic documents used in some embodiments of the invention can be described by a document type definition ("DTD"). As is known, a DTD is a set of rules that defines the elements and attributes in an XML document that invokes or conforms to the DTD. DTDs include declarations for elements and attributes generally beginning with an XML prolog followed by a document type declaration, element type declarations, attribute declarations, and other components.

[**0079**] As shown, the exemplary dynamic document **150** includes (or is modeled as having) a root element; namely document element **151**. The document element includes a number of attributes **153**. In the example shown, the attributes include a source attribute, a product family attribute, a document class attribute, a recordable attribute, an applicable law state attribute, a margins state attribute, a document-specific style attribute, and a source name attribute. The attributes **153** may be used for a variety of purposes including to identify the source of particular content (that is who authored, owns, or sponsors the content); to identify the product for which the document was written; to identify whether the document is a standard document, an addendum to another document, a notice, a rider, or other type or class of document; to identify whether a document is intended to be recorded with a registrar (for example, a registrar of deeds); to indicate the state to which the document applies; to indicate specific margin requirements of the state or other government entity; to specify formatting styles; and to identify the name of a document source (using the previously introduced fictitious example, "SecondNationWide Bank"). Generally, information contained in element content and attributes is not used to guide assembly. Instead, embedded rules use externally supplied data to guide assembly.

[**0080**] The document **150** also includes zero or more document information elements **154**, zero or more prolog elements **156**, zero or more body elements **158**, zero or more epilog elements **160**, and zero or more appendix elements **162**. The elements **154**, **156**, **158**, **160**, and **162**, in turn, may include their own attributes and sub-elements. Because the creation of a DTD is generally dependent on the specific circumstances for which an XML solution is being developed only a portion of an exemplary DTD that describes the document **150** will be described. It should be understood, however, that in light of the teachings provided, one of ordinary skill in the art would be able to understand how the exemplary DTD operates in connection with other components of the embodiments described herein.

[**0081**] **FIG. 11** illustrates the document information element **154** in greater detail. The document information element **154** may contain a mixture of zero or more citation elements **164**, zero or more instruction elements **166**, zero or more comment elements **168**, an optional keywords set elements **169**, and at most one tagline elements **170-172**. The tagline elements **170-172** may be used to provide information regarding the source of a particular document such as a proprietary knowledge base, industry accepted standard or custom-created knowledge base or standard. If a keywords set element **169** is included, it must contain a keyword element **174**. In the embodiment shown, a keyword element contains a mixture of in-line level elements and parse-able contents known as "#PCDATA" (defined in the key of **FIG. 10**).

[**0082**] **FIG. 12** illustrates the prolog element **156** in greater detail. In one embodiment, the prolog element **156** may include an optional object information element **174**, and a mixture of one or more document title elements **176**, recording information elements **178**, notice elements **180**, summary information elements **182**, parties elements **184**, section elements **186**, and block level elements **187**. The object information element **174** includes a mixture of zero or more citation elements **189**, instruction elements **190**, and comment elements **191**, followed by an optional keyword set element **192**.

FOLEON EX1005
IPR2026-00404

[0083] **FIG. 13** illustrates the body element **158** in greater detail. In the embodiment shown, the body element **158** contains either one or more chapter elements **193** or a mixture of one or more section elements **194**, table elements **195**, parties elements **196**, notice elements **197**, itemization elements **199**, or fedbox elements **200**, which in the embodiment shown are containers for other legally required, summarized, or detailed information. The fedbox elements may contain loan amount, interest rate, repayment terms, and other values.

[0084] **FIG. 14** illustrates the epilog element **160** in greater detail. In the embodiment shown, the epilog element **160** includes an optional object information element **202** followed by a mixture of one or more recording information elements **203**, notice elements **204**, section elements **205**, signature elements **206**, or elements defined in a block matrix. If a signature element **206** is provided, it may be followed by an optional notary element **207**.

[0085] **FIG. 15** illustrates the appendix element **162** in greater detail. In the embodiment shown, the appendix element **162** contains an optional appendix information element **209**, an optional title information element **211**, one or more chapter elements **213** or a mixture of one or more table, comment, section, notice, parties, signature, itemization, or fedbox elements. The optional appendix information element **209** includes a mixture of zero or more citation, instruction, or comment elements, and an optional keyword set element.

[0086] **FIG. 16** illustrates an exemplary static document **230** having a plurality of pages **232**. In one embodiment of the invention, each page (e.g., one of the pages **232**) of a document (e.g., the document **230**) is constructed by laying compositions (e.g., compositions **234** and **236**) on a rendering surface **240** (as shown in **FIG. 17**).

[0087] **FIG. 18** illustrates a model of a schema or, more simply, a schema **300** for static documents used in embodiments of the invention. The schema **300** includes a root element in the form of a template element **302**. The template element **302** contains a number of sub-elements (more commonly referred to as children or child elements), including a template information element **304**, a data table element **306**, and an instances element **308**. The template information element **304** includes descriptive information about the template element **302**. The descriptive information can include a title element that contains a title for the document at hand, a description element that is a container for free-form text about the template element, a help text element, which is a container for free-form information that may be useful to a consumer of the document, and a document type element that is provided to support a type element from other schemas or DTDs. In addition, the template information element **304** may include a print constraints element which is a container for special values that may be needed or used by a printing environment.

[0088] The data table element **306** includes, in some embodiments, all the data values to be used in a specific instance of a template **302**. In one embodiment of the invention, the data table element **306** defines a structure of data values that can be accessed by name, or by a combination of name and one or more indices. The data in the data table element **306** drives the application of business rules to transform an abstract instance of the template **302** into one or more concrete instances and to assign data values to data targets. A data target is a location or area on a composition that can be modified at transaction time. Exemplary data targets include a check box, a text field, a button, or a digital signature placeholder. A data target may have dimensions, presentation characteristics, help text, overflow rules, and other attributes as specified in the applicable schema. The interaction between the data in the data table **306** and the overflow rules drives the usage of addendum pages, their contents, and quantity.

[0089] **FIG. 19** illustrates a portion of an exemplary data table **330** having a plurality of data targets **332**. **FIG. 20** illustrates exemplary XML code for the data table **330**. Each piece of data ("Data") is wrapped with an element descended from a "RootDatum" to provide data type and identification information. Each RootDatum can contain a Data element or a Value element or both. Each Data element can contain a plurality of Datum elements and/or a Value.

[0090] Referring back to **FIG. 18**, the instances element **308** describes how each individual instance of the document is constructed. The instances element **308** includes a single instance element **340** at authoring time. The abstract instance is replicated into a plurality of instances at transaction time. In embodiments of the invention, information in the data table may determine the number of instances of a document.

[0091] In one embodiment of the invention, an instance element **340** must include a pages element **342** and may include an overlays element **344**, a continuations element **346**, and a data table element **348**. As best seen by reference to **FIG. 21**, each pages element **342** may include one or more page elements **355**. And, each page element **355** may include an overlays element **357** and one or more composition elements **358**. Each overlays element may include one or more overlay elements **360**. Each continuations element **346** may include one or more continuation elements **362** and, in one embodiment of the invention, must include one or more overflow default elements **364**. Each data table element **348** may include one or more datum elements **366**

[0092] Continuations elements tell a processor how to handle overflows. An overflow condition can be created when the data value to be assigned to a field target cannot be drawn in the available space according to the attributes governing that space. Overflow handling is defined as part of the contents of an instance element **340**. An instance element **340** can have any number of pages, but the overflow handling is independent of those pages. When data for a text target requires more space than is available, a continuation event occurs. Continuation handling falls into three categories. The first of these is a no continuation handling condition, where fields are handled on their original page. Under a no conditional handling condition attributes may specify font reduction that may be applied. The second type of continuation handling is structured handling, where handling of rich data structures such as tables or parties in a tabular format is required on the continuation page. A third type of continuation handling is unstructured handling, where simple data items such as a property description are handled. In an unstructured handling condition several such fields may be continued to the same continuation page and arranged in order along with a caption for each value, a potential forwarding message, and other attributes.

[0093] As noted above, pages of a document may be constructed by laying compositions or composition elements (such as one of the composition elements **358**) on a rendering surface. In general, a composition may be used to describe a unit of information that is authored or composed as a discrete unit. A composition element contains a pre-authored formal description or sequence of text, data, and graphic content meant to be drawn as a unit on a rendering surface. A composition element may correspond to a page, but may also be a partial page or a re-locatable page segment. There can be more than one composition element **358** for a given rendering surface. The composition elements may be arranged so that they cover an entire rendering surface (for example, one composition element **358** for the top half of the page and another for the bottom half of the page). Alternatively, composition elements may also be arranged so that a composition element assigned a higher level or level number contains content that masks, complements, modifies, or replaces content in a composition element with a lower level or level number. Compositions can manifest themselves as document pages, page-level overlays or instance-level, conditional overlays.

[0094] **FIG. 22** illustrates an exemplary architecture of the composition element **358**. The composition element **358** may include a composition information element **370**, a regions element **372**, a font element **374**, a field modifiers element **376**, and a field table **378**. The regions element **372** may include a region element **380**. In turn, the region element may include a region information element **382** and one or more target design elements. These target design elements may include a text element **384**, a text target element **386**, a bitmap target element **388**, a signature target element **390**, an arc element **392**, a bitmap element **394**, a line element **396**, and a rectangle element **398**.

[0095] As noted, embodiments of the invention may include a database or knowledge base (e.g., knowledge base **54**). Embodiments of the invention may also include a run time instance of the knowledge base **54** (shown as a runtime database **120** in **FIGS. 8 and 4**). The runtime database **120** is where document content can be associated with various levels of precedence and from which the content for a particular document and precedence can be extracted. The runtime database **120** is generated by the press process **92** from a content store (such as the content **58**), which is created by a separate authoring facility (such as the authoring tool **74**).

[0096] As also noted, in some embodiments, the rules **56/84** are applied to determine the final document content. The rules **56/84** may be used to select content from various alternatives, but can also be used to generate new content according to information supplied in the transaction data or information **61**. The rules **56/84** are also used to manipulate and format data. As noted above, the transaction data or information **61** may be supplied according to an agreed upon schema, such as an XML schema or document type definition ("DTD"). Numerous schemas can be used and supported, so long as the schema is agreed upon by the service and service user before the transaction occurs. Each supported transaction schema has an associated resolution catalogue, which may also be an XML document. The resolution catalogue defines the mapping of transaction data to text identifiers used in document components. The resolution methodology used in some embodiments leverages technologies based on XPath (directions for how to get from one place in an XML document to another or how to retrieve elements from an XML document) and XSLT (extensible style sheet language transformations) standards to access transaction data.

[0097] In embodiments of the invention it is possible that various data structure may have the same name. For example, the knowledge base may be populated with content from unaffiliated sources and it is possible that the sources used the same names for different structures or components of structures. Thus, it is useful to ensure that names for various data structures properly map.

[0098] In embodiments of the invention it is possible to handle name conflicts and discrepancies by performing a dynamic resolution. In some embodiments of the invention, dynamic resolution employs what is called a resolution catalogue. A resolution catalogue may be a collection of XPath statements. The resolution catalog provides a one-to-one correlation of a path (e.g., an XPath) into a data set versus the name of interest. As noted, documents are generated based on transaction information, which may take the form of a transaction XML packet. As also noted, the XML packet may include a list of documents and a transaction data set. The XML processor uses resolution catalogs to evaluate the names to data in the transaction data set. The resolution catalogs inherently prevent name conflicts, as the transaction data is linked to an appropriate catalog based on, for example, the source of the content being used.

[0099] As should be apparent to one of ordinary skill in the art, the systems shown in the figures are models of what actual systems might be like. Many of the components and logical structures described are capable of being implemented in software which may be stored as instructions on a computer readable medium (such as an optical disc, disc drive, RAM, ROM, etc.) and executed by a microprocessor or a similar device. Many of the same components are also capable of being implemented in hardware using a variety of components including, for example, application specific integrated circuits ("ASICs"). In addition, capitalized terms, such as "RootDatum" are used. Use of such terms is made to be consistent with common industry and programming practices or to make reference to diagrams easier for the reader. Nothing, however, should be construed as limiting the breadth of such terms merely because they have been capitalized. It should also be understood that while the above description focused on the assembling of documents, the content assembled could take a variety of forms. For example, MPEG files could be assembled using techniques described herein. Similarly, other computer-processable components could be configured according to markup and other mechanisms discussed herein and be assembled to create, for example an album of music files, video files, or photographs.

[0100] As can be seen from the above, the present invention provides a system and method of creating documents and assembling computer-processable components. Additional features and advantages of the invention are set forth in the appended claims.

FOLEON EX1005
IPR2026-00404

What is claimed is:

1. A data structure generation system comprising:

a knowledge base configured to be coupled to a data structure assembly facility, the knowledge base configured to store data structure components as objects in an object-relational hierarchy, each object configurable to have a precedence, to include one or more rules, and to include content.

2. A system as claimed in claim 1, wherein the precedence provides hierarchical control of content to match business preferences.

3. A system as claimed in claim 1, further comprising a first set of objects, a second set of objects, and a third set of objects, the first set of objects having a first, read-only precedence level, the second set of objects having a second precedence level that is higher than the first precedence level, and the third set of objects having a third precedence level that is higher than the second precedence level.

4. A system as claimed in claim 3, further comprising a data structure assembly facility.

5. A system as claimed in claim 4, wherein the assembly facility is operable to retrieve one or more data structure components from the knowledge base based on a transaction identifier; process the one or more data structure components in a processor to generate a tree having a root node; process the tree beginning at the root node; and to override objects of low precedence with objects of high precedence.

6. A system as claimed in claim 5, wherein the assembly facility is operable to, when a object having a rule is encountered, evaluate the rule and replace it with a value.

7. A system as claimed in claim 4, further comprising an authoring tool and a content management system.

8. A system as claimed in claim 7, wherein the content management system is configured to permit a user to create a version of an object in the first set of objects, and save the version of the object at a precedence that is different than the first precedence level.

9. A system as claimed in claim 7, wherein the content management system is configured to permit a user to create a version of an object in the first set of objects where the version of the object and the object at a different precedence level have the same name.

10. A system as claimed in claim 1, wherein each object is configurable to be locked in order to prevent overriding by an object having a higher precedence level.

11. A knowledge base configured to store data structure components as objects in an object-relational hierarchy, each object configurable to have a precedence, to include one or more rules, and to include content.

12. A knowledge base as claimed in claim 11, further comprising a first set of objects, a second set of objects, and a third set of objects, the first set of objects having a first, read-only precedence level, the second set of objects having a second precedence level that is lower than the first precedence level, and the third set of objects having a third precedence level that is lower than the second precedence level.

13. A knowledge base as claimed in claim 12, wherein each object is configurable to be locked in order to prevent overriding by an object having a higher precedence level.

14. A method of assembling a data structure from a group of components, the method comprising:

retrieving one or more cross-referenced data structure components from a database, the one or more data structure components configured to have a precedence level;

processing the one or more cross-referenced data structure components in a processor to generate a tree having a root node;

processing the tree beginning at the root node; and

overriding objects of low precedence with objects of high precedence.

15. A method as claimed in claim 14, further comprising creating a transaction data set.

16. A method as claimed in claim 15, wherein retrieving one or more cross-referenced data structure components from a database including retrieving the same based on the transaction data set.

17. A method as claimed in claim 15, wherein the one or more data structure components are configured to include one or more rules.

18. A method as claimed in claim 15, further comprising, when a rule is encountered, evaluating the rule and replacing it with a value.

19. A method as claimed in claim 14, further comprising configuring each data structure component to have a precedence level.

20. A method as claimed in claim 19, further comprising configuring each data structure component to be lockable in order to prevent overriding by an object having a higher precedence level.

21. A method as claimed in claim 19, further comprising configuring the database so that it may include a first set of data structure components, a second set of data structure components, and a third set of data structure components, the first set of data structure components having a first, read-only precedence level, the second set of data structure components having a second precedence level that is higher than the first precedence level, and the third set of data structure components having a third precedence level that is higher than the second precedence level

22. A computer readable medium containing instructions for generating a data structure by

retrieving one or more cross-referenced data structure components from a database, the one or more data structure components configured to have a precedence level;

processing the one or more cross-referenced data structure components in a processor to generate a tree having a root node;

processing the tree beginning at the root node;

overriding objects of low precedence with objects of high precedence; and

transforming the resulting tree into a data structure representing a document.

23. A computer readable medium as claimed in claim 22, further comprising instructions for structuring the one or more data structures so that they may include one or more rules.

24. A computer readable medium as claimed in claim 23, further comprising instructions for processing the one or more data structures components so that when a rule is encountered, the rule is evaluated and replaced with a value.

* * * * *