US 20100288748A1

(19) United States

(12) Patent Application Publication

Fortmann et al.

(10) Pub. No.: US 2010/0288748 A1

(43) Pub. Date: Nov. 18, 2010

(54) **WARMING CART**

(76) Inventors: **Robert C. Fortmann**, Grayslake, IL (US); **Frank G. Marolda**, Vernon Hills, IL (US)

Correspondence Address:
BRINKS HOFER GILSON & LIONE
P.O. BOX 10395
CHICAGO, IL 60610 (US)

(21) Appl. No.: **12/778,705**

(22) Filed: **May 12, 2010**

Related U.S. Application Data

(60) Provisional application No. 61/178,546, filed on May 15, 2009.

Publication Classification

(51) **Int. Cl.**
H05B 1/00 (2006.01)

(52) **U.S. Cl.** **219/385**

(57) **ABSTRACT**

A cabinet is provided. The cabinet is configured to receive and support a plurality of trays therein. The cabinet includes a housing defining an enclosure with a top, a bottom, and right and left sides disposed between the top and bottom and a plurality of shelves disposed within the enclosure and disposed between the right and left sides in a spaced relationship. One or more heaters are disposed in conjunction with each of the plurality of shelves. A cover is disposed directly below at least some of the plurality of shelves, and configured to be slidably connected with respect to the shelf for selective placement into the enclosure or removal from the shelf. A control system is in electrical communication with the one or more heaters, and is configured to operate the one or more heaters in a predetermined manner.

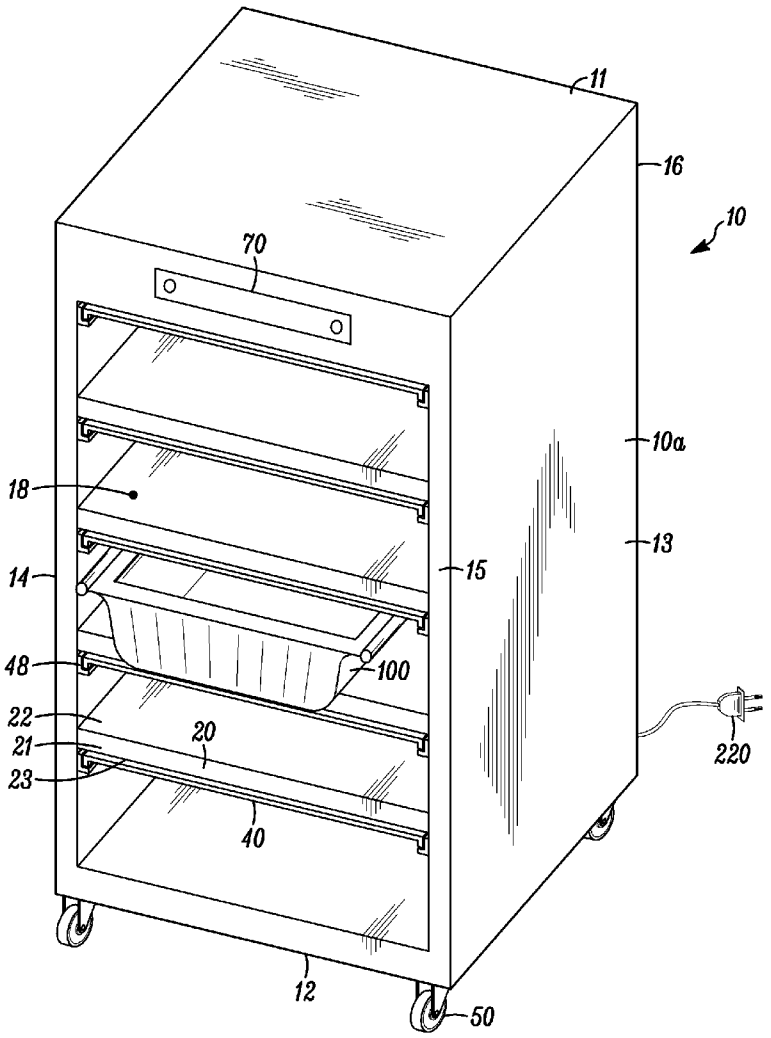

Duke Manufacturing Co. EX1010
U.S. Patent No. 10,852,002

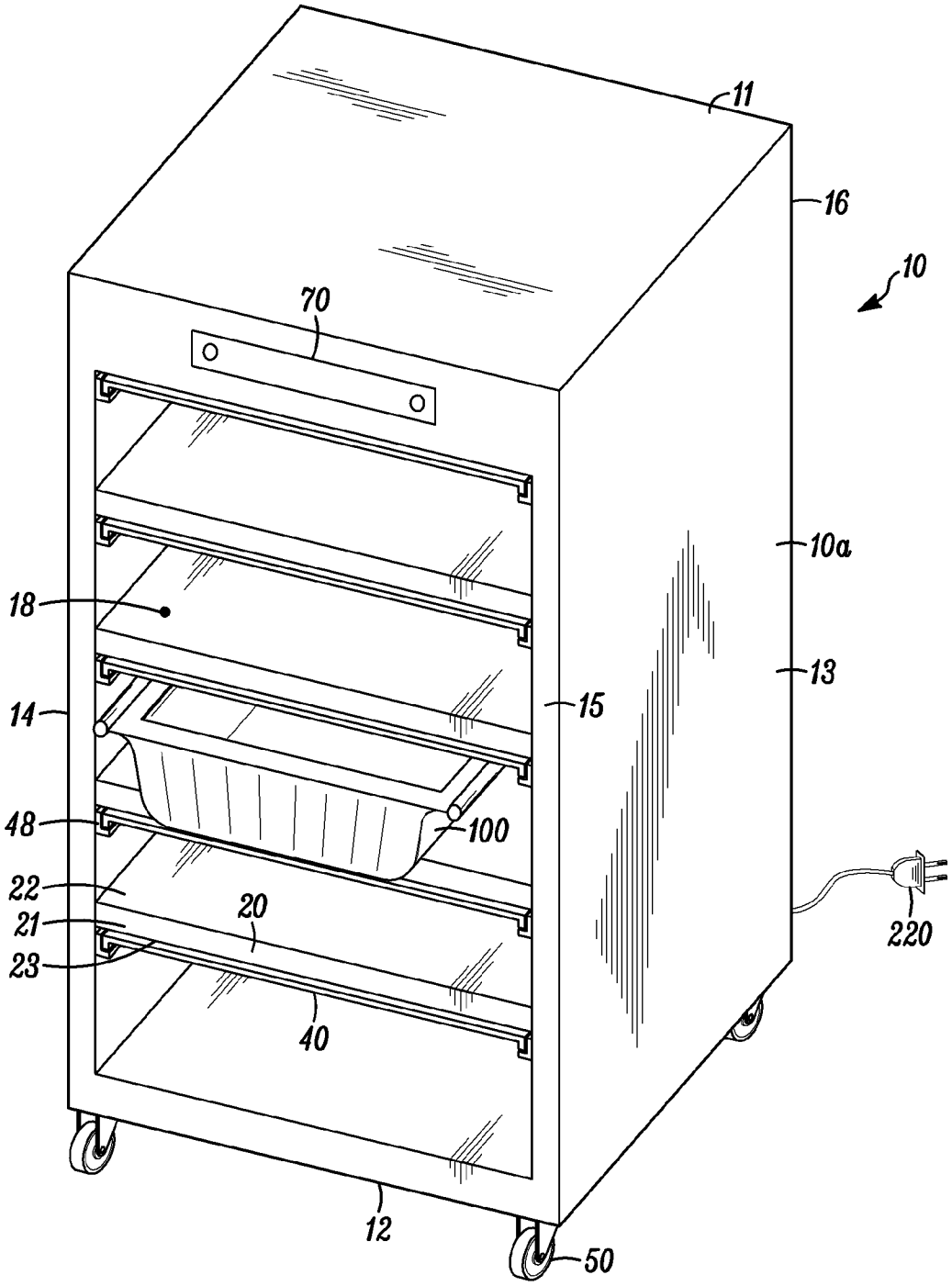

FIG. 1

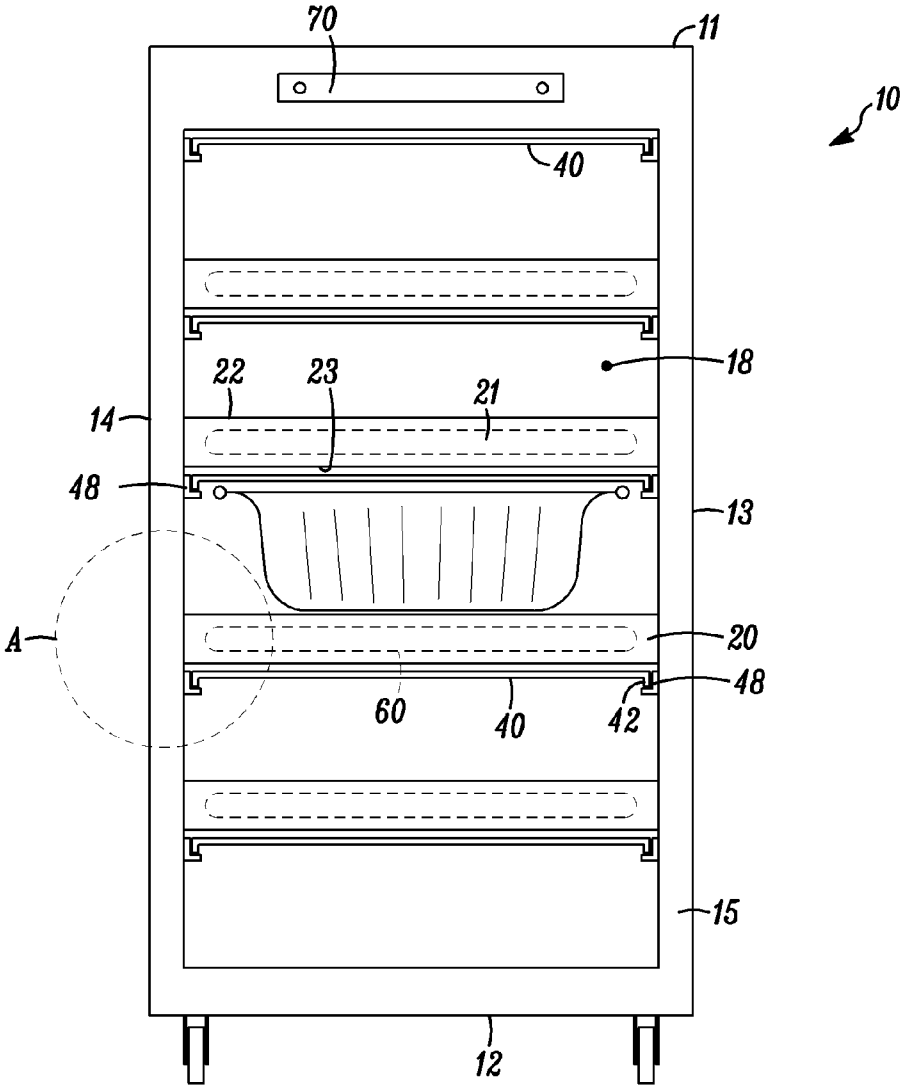
70
11
10
40
18
22
23
21
14
48
13
A
20
48
60
40
42
15
12

FIG. 2

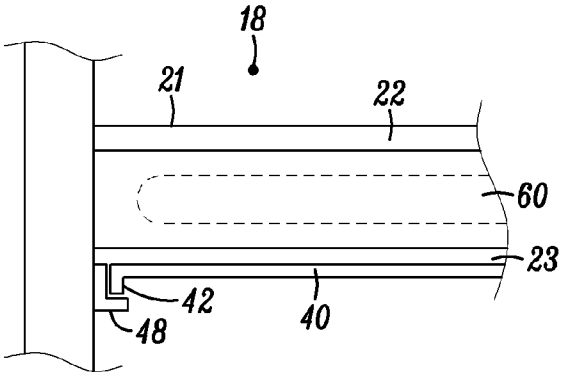
18
21
22
60
23
42
40
48

FIG. 3

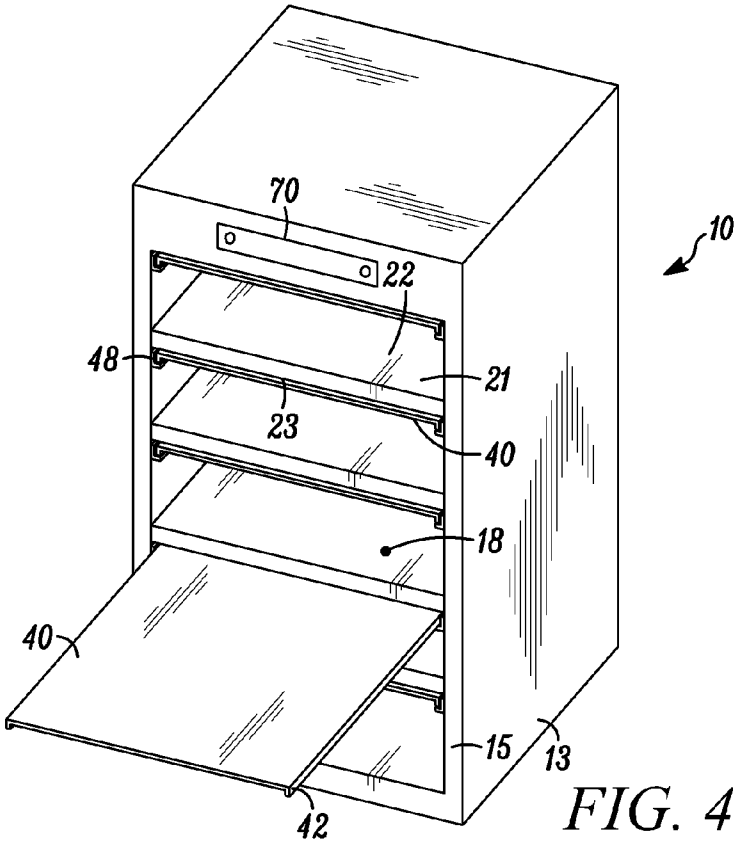
70
10
22
48
21
23
40
18
40
15
13
42

FIG. 4

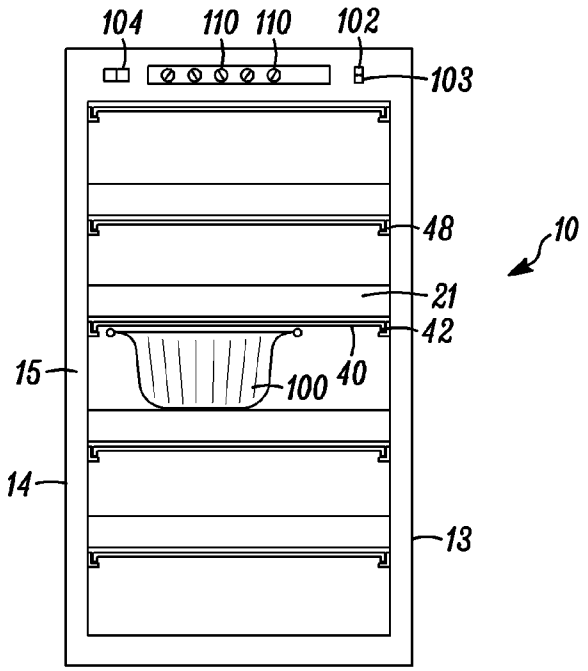
104
110
110
102
103
48
10
21
42
15
100
40
14
13

FIG. 5

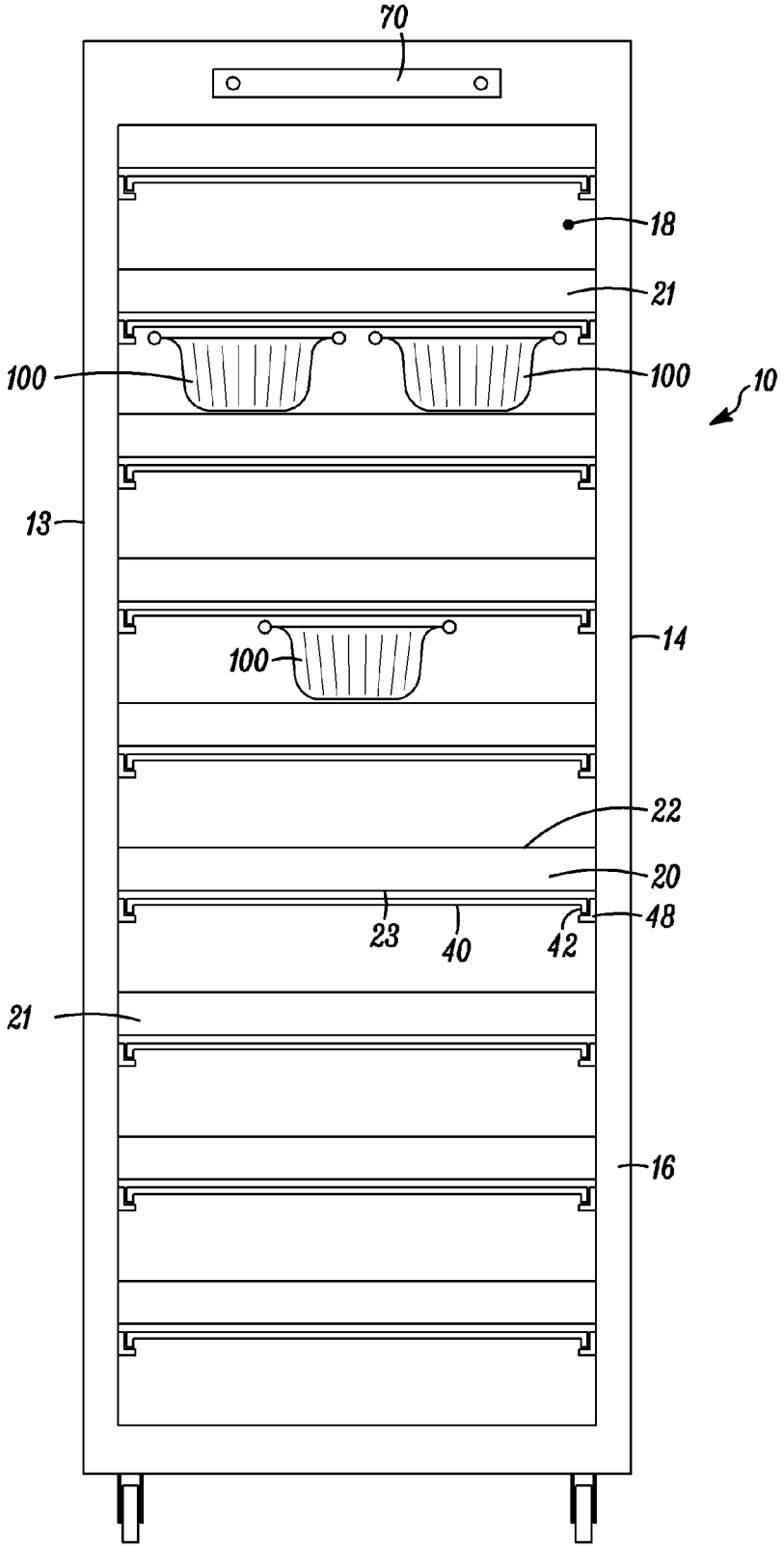

FIG. 6

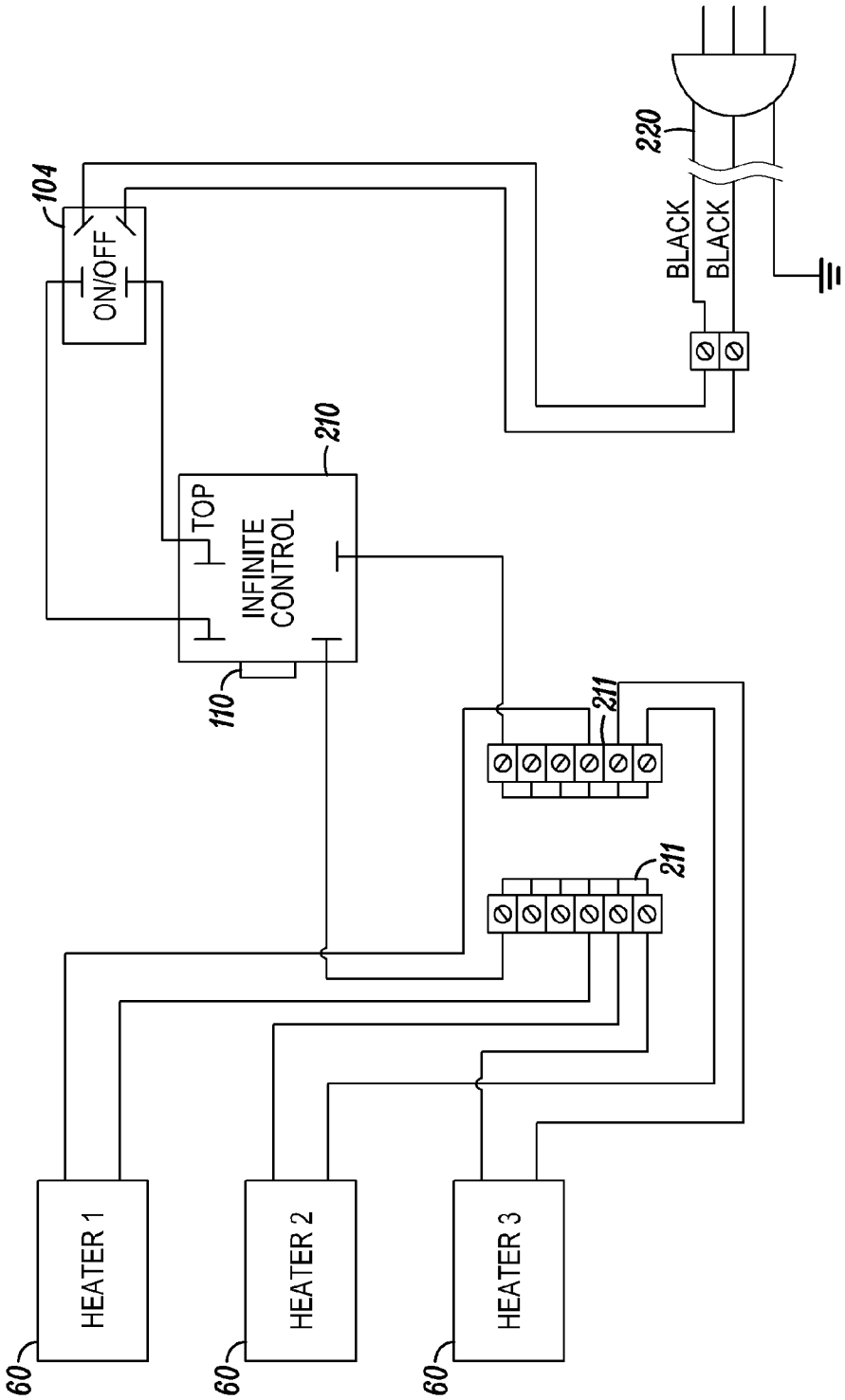
104
ON/OFF
220
BLACK
BLACK
210
TOP
INFINITE CONTROL
110
211
211
HEATER 1
HEATER 2
HEATER 3
60
60
60

FIG. 7

WARMING CART

CROSS-REFERENCE TO RELATED APPLICATIONS

[0001] This application claims priority under 35 U.S.C. §119(e) to U.S. Provisional Application No. 61/178,546, filed on May 15, 2009, and entitled "Warming Cart," the entirety of which is hereby fully incorporated by reference herein.

TECHNICAL FIELD

[0002] The subject disclosure relates to carts and cabinets that are configured to maintain a previously cooked food product warm during a delay time between the cooking process and serving to the customer.

BRIEF SUMMARY

[0003] A first representative embodiment of the disclosure provides a warming cart. The cart includes a housing defining an enclosure with top, bottom, right, and left walls and a plurality of racks disposed within the housing in a vertically spaced arrangement. A plurality of heaters are disposed in conjunction with the plurality of racks, with at least one of the plurality of heaters being disposed in conjunction with each of the plurality of racks. The plurality of heaters are configured to operate on a duty cycle to maintain the racks within a specified desired temperature range.

[0004] A second representative embodiment of the disclosure provides a cabinet configured to receive and support a plurality of trays therein. The cabinet includes a housing defining an enclosure with a top, a bottom, and right and left sides disposed between the top and bottom. A plurality of shelves are disposed within the enclosure and disposed between the right and left sides in a spaced relationship. One or more heaters are disposed in conjunction with each of the plurality of shelves. A cover is disposed directly below at least some of the plurality of shelves, and configured to be slidably connected with respect to the respective shelf for selective placement into the enclosure or removal from the shelf. A control system is in electrical communication with the one or more heaters and is configured to operate the one or more heaters in a predetermined manner.

[0005] A third representative embodiment of the disclosure provides a cabinet configured to receive and support a plurality of trays therein. The cabinet includes a housing defining an enclosure with a top, a bottom, and right and left sides disposed between the top and bottom, the housing comprising substantially open front and back sides. A plurality of shelves are disposed within the enclosure and disposed between the right and left sides in a spaced relationship. One or more heaters are disposed in conjunction with each of the plurality of shelves. A cover is disposed directly below at least some of the plurality of shelves, and configured to be slidably connected with respect to the respective shelf for selective placement into the enclosure or removal from the shelf. A control system is in electrical communication with the one or more heaters and is configured to operate the one or more heaters in a predetermined manner.

[0006] Advantages of the disclosed cabinet of use will become more apparent to those skilled in the art from the following description of embodiments that have been shown and described by way of illustration. As will be realized, other and different embodiments are contemplated, and the disclosed details are capable of modification in various respects. Accordingly, the drawings and description are to be regarded as illustrative in nature and not as restrictive.

BRIEF DESCRIPTION OF THE DRAWINGS

[0007] FIG. **1** is a perspective view of a warming cabinet showing a pan disposed therein.

[0008] FIG. **2** is a front view of the warming cabinet of FIG. **1**.

[0009] FIG. **3** is a detail view of detail A of FIG. **2**.

[0010] FIG. **4** is the view of FIG. **1** showing a cover partially removed from the warming cabinet.

[0011] FIG. **5** is the view of FIG. **1** showing the operable portions of the control system of the warming cabinet.

[0012] FIG. **6** is a back view of another warming cabinet.

[0013] FIG. **7** is a schematic of the control circuit used with a warming cabinet.

DETAILED DESCRIPTION

[0014] Turning now to FIGS. **1-7**, a warming cart or cabinet **10** is provided. The warming cart **10** includes a body **10***a* that is defined from a top wall **11**, a bottom wall **12**, a left wall **14**, and a right wall **13** that define a warming volume **18** therein. The warming cart **10** is configured with an open front side **15** and an open back side **16** to allow one or more pans **100** to be quickly disposed within the cart **10** and the warming volume and removed from the cart **10** without operation of doors or other barriers found on conventional warming carts. As shown in FIGS. **1**, **2**, **4**, and **5** the front side **15** is open to allow pans **100**, trays, pizza boxes and the like to slide through the open front side **15** and within the warming volume **18** of the cart, and as shown in FIG. **6** the back side **16** is also open to allow pans **100** and the like to slide through the back side **16** into the warming volume **18**. The cart **10** may be a free standing unit and may be provided with castors, wheels, or the like **50** upon the bottom thereof to allow the cart **10** to be easily transported. In some embodiments, the cart **10** may be 5-6 feet tall and configured to movably rest upon the floor of the establishment, while in other embodiments, the cart **10** may be only about 1-2 feet tall and configured to rest upon a table or other elevated surface within the establishment.

[0015] The warming cart **10** includes a plurality of racks **20** that are disposed in a vertical orientation with respect to each other and disposed between the right and left walls **14**, **13** within the warming volume **18**. The racks **20** each include a shelf **21** that is fixed to the right and left sides **14**, **13** of the body **10***a*, with the top surface **22** of the shelf **21** being spaced from a bottom surface **23** of a neighboring shelf **21***a* distance to allow a conventional restaurant cooking pan **100** to be inserted therebetween (FIG. **2**). In some embodiments, the shelves **21** are disposed within the cart **10** with a vertical spacing just greater than the normal 2.5 inch depth of conventional restaurant warming pans **100**. In some embodiments, the shelves **21** are configured with sufficient width to accept two or more standard 12 inch wide restaurant warming pans therewithin in a side by side relationship (FIG. **6**), with a length of just greater than 20 inches to allow the pans to be completely received within the warming volume **18** of the cart **10** (FIG. **1**). In other embodiments, the cart **10** may be sized to receive a single restaurant pan on each shelf, or to receive a conventionally sized pizza box (such as an 18 inch square box) upon each shelf **21**.

[0016] In some embodiments, the cart **10** may include 2, 5 (FIG. **1**), 10 (FIG. **6**), or another number of vertically spaced

shelves **21** within the warming volume **18**. The shelves **21** may include one or more heaters **60** (as discussed in greater detail below) therein or therewith, such that the shelves **21** may each produce about 300 watts of heat during steady state operation. For example, in embodiments with 5 or fewer shelves, the unit may be operable with 120v 15 amp service, while in larger units with greater than 5 shelves, or greater than 300 watts per shelf, the unit may require higher 208 v service.

[0017] The plurality of shelves **21** may each include a removable and slidable cover **40** that is disposed in conjunction with and below each shelf **21** (with the exception of the bottom shelf **21**, with a cover **40** also provided above the upper-most shelf). The cover **40** is configured to provide a lid to each restaurant or hotel pan **100** that is placed onto the shelf **21** within the warming volume **18** such that the heat from the food products disposed within the pan **100** (and the heat of the residual heat of the pan **100** itself) is substantially prevented from escaping due to convective heat transfer. The cover **40** additionally substantially encloses the one or more pans **100** disposed upon the shelf **21** therebelow, which maintains any moisture or water vapor within the pan **100** to prevent the warmed food disposed within the pan **100** from drying if the food is maintained in the unit for an extended period of time. An additional cover **40** may be slidably disposed at the top of the warming volume **18** to enclose a pan **100** that is disposed upon the upper-most shelf **21**.

[0018] The covers **40** are disposed onto the respective shelves **21** to be removable as necessary, by sliding the cover **40** from the shelf **21** by way of a track **48** that is either disposed upon the right and left side walls **13**, **14** (FIG. **2**) of the body housing **10***a* (and located proximate and below the location where each shelf **21** connects with the right and left side walls **13**, **14**) or a track **48** may be fixed directly to the respective shelf **21** and is disposed beneath each of the right and left sides of the shelf **21**. In some embodiments, as shown in FIGS. **3**-**4**, the cover **40** may include flanges **42** or similar structures that are closely received within the track **48** to encourage stability within the track **48** and ease of sliding movement therewithin. The covers **40** are disposed to provide a spacing between the cover **40** and the shelf **21** disposed thereunder that receives a conventional restaurant cooking pan **100** therebetween, with little to no space between the upper edges of the pan **100** and the bottom surface of the cover **40**. In some embodiments, this spacing may be just greater than 2.5 inches, the depth of conventional restaurant warming pans. This arrangement allows the pans **100** to be removed, if desired, with the cover **40** installed within the cart **10** and disposed directly above a pan **100**, if desired. The cover **40** is drawn schematically in FIGS. **2** and **5** depicting a space between the top of the cover **40** and the bottom surface **23** of the shelf **21**. In some embodiments, this space depicted in the drawings is provided between the cover **40** and the shelf **21**, while in other embodiments the top surface of the cover **40** contacts the bottom surface **23** of the shelf **21** to provide conductive heat transfer therebetween.

[0019] Each of the plurality of shelves **21** include one or more heaters **60** (shown schematically in FIGS. **2** and **3**) that are disposed within the internal volume shelf **21**, or disposed under the shelf but in contact with the shelf **21**. In some embodiments, the shelves **21** may include two planar sheets of thin material (such as stainless steel) that form an envelope for the heater **60** to be disposed therebetween. The heater **60** is normally disposed such that the heater **60** makes surface contact with at least the upper sheet **22** forming the shelf **21** (and also the heater **60** may contact the lower sheet **23** forming the shelf **21**) such that a percentage of the heat generated by the heaters disposed in conjunction with each shelf **21** is transferred directly to the shelf by conductive heat transfer. The remaining portion of heat generated by the heaters **60** disposed in conjunction with each shelf **21** may be transferred to the shelf **21** by radiation heat transfer. It is also contemplated that some heat may be transferred to the shelf **21** via convection due to potential air currents established within the shelf **21** due to the relative different temperatures of the air at various positions within the shelf **21** and/or forced air convection in embodiments with forced air flow within the shelf **21**.

[0020] In some embodiments, the shelf **21** may include a bottom sheet **23** that is disposed below the heater **60** in each shelf **21**. This bottom sheet **23** may be in contact with the heater **60** to allow for conductive heat transfer thereto as well as receiving heat from the heater due to radiation heat transfer, and potentially convective heat transfer if the shelf **21** is configured to allow significant air flow (either due to natural convection and/or forced air convection) within the shelf **21**. The shelf **21**, and specifically the bottom sheet **23** of the shelf **21**, and the cover **40** are configured to transfer a portion of the heat generated by the one or more heaters **60** disposed within the shelf **21** to the portion of the warming volume **18** located below the shelf **21**. Accordingly, a pan **100** disposed within the cart **10** may receive heat from both the shelf **21** below the pan (by conduction and radiation), but the pan **100** and the food product located within the pan **100** may receive heat from the shelf **21** disposed above the pan **100** due to radiation.

[0021] As shown in FIG. **7**, each of the one or more heaters **60** is operated by control circuitry **200** located within the cart **10** that is configured to control the duty cycle and the heat generation capacity of the heaters **60** and therefore the temperature of the shelves **21** and ultimately the food product disposed within the warming volume **18**. In some embodiments, each shelf **21** may include one or more heaters **60** that are controlled separately from the heaters **60** that are disposed in conjunction with the remaining shelves **21**. In embodiments where the heaters **60** of different shelves **21** are controlled independently, the cart **10** would include the number of control systems **200** as different heaters to be independently controlled. In embodiments with multiple control systems **200**, each control system (such as the infinite switch **210**) is wired in parallel (or potentially in series) with each control system **200** being energized or secured by a single On/Off switch **104**. In other embodiments, multiple On/Off switches **104** may be provided on the cart **10** to allow the user to selectively provide or secure power to different shelves **21** within the cart **10**.

[0022] In other embodiments, two or more shelves **21** (normally contiguous shelves **21**) may controlled simultaneously to form a multiple shelf heating zone that is controlled by the same control system. As shown in FIG. **7**, the control system **200** selectively provides current to multiple heaters **60**, which may provide for multiple heated shelves **21** in the same zone. In still other embodiments, all of the shelves **21** may be controlled using the same control system **200**.

[0023] The control system **200** may use a feedback control technology or it may use a non-feedback structure. In some embodiments, the heaters **60** (either individually or together to form zones of multiple shelves) may be controlled by one or more infinite switches **210** with the multiple heaters **60**

being connected in parallel through breadboard type connectors **211**. In other embodiments, the multiple heaters **60** may be connected in series in a circuit with the infinite switch **210**. Infinite switches **210** include a bimetallic strip that selectively opens and closes based on the heat generated therein due to the current passing through one or more of the metals forming the strip. The infinite switch **210** is controllable by varying the orientation of the bistable, which changes the percentage of time that current is available to the heaters, and thus changes the time average output of the heaters **60**.

[0024] The one or more infinite switches **210** are normally preset by the manufacturer to a setting that provides a desired steady state temperature ultimately to a food product disposed therein, wither within a pan, upon a baking sheet or the like, or within a pizza box. In embodiments with multiple heat zones, the two or more infinite switches **210** may be calibrated to establish two or more heat zones of differing temperatures within the warming volume, to allow food products that require different warming temperatures to be simultaneously disposed within the cart **10**. Alternatively, the multiple heat zones within the cart **10** may be used to allow for the gradual heat up or cool down of a food product located within a pan **100** selectively disposed within each heat zone for a specified period of time. In still other embodiments, the heaters **60** (or heat zones) are specifically calibrated to generate a uniform temperature within the entire warming volume **18** of the cart **10**. It has been experimentally determined that heaters disposed within or in conjunction with lower shelves **21** need to be energized a longer percentage of available time than heaters **60** disposed in conjunction with upper shelves **21**, due at least in part due to the natural tendency of heat to rise. Accordingly, the manufacturer (or end user) may calibrate the infinite switches **210** for lower shelves **21** (or lower heat zones) to operate more frequently than the heaters **60** in the upper shelves **21** (or heat zones) to achieve a substantially uniform temperature within the warming volume **18** at steady state. An understanding of the heat input rate to a tray **100** disposed within a respective zone and the typical ambient heat losses from a tray **100** disposed within a zone will allow for the intelligent and controlled manipulation of pans **100** as desirable.

[0025] In some embodiments, the one or a plurality of infinite switches **210** may be disposed within the cart **10** in a sealed location **70** to prevent the users of the cart **10** from inadvertently altering the settings of the infinite switches **210** and therefore the heat input in each zone. The infinite switches **210** are preferably disposed with a closed volume of the cart that is accessible if desired by removing a limited number of conventional fasteners, to allow for relatively easy and convenient access if desired by a user or a technician.

[0026] In other embodiments, the cart **10** may include one or more infinite switches **210** that are configured to control temperature in the desired number of heating zones within the cart **10**. The one or more infinite switches **210** are disposed (or may be controlled) by the end user of the cart **10** through knobs **110** or other operators that are disposed upon the cart **10** and accessible by the user. The knobs **110** may be calibrated to depict the expected temperature within the heating zone at steady state when a tray is disposed within the cart **10**. The cart **10** may additionally include a power available light **102**, a power on light **103**, as well as an indication of the temperature within a one or a plurality of positions within the cart, or within each heating zone, or upon each shelf.

[0027] Alternatively, the cart **10** may include a feedback control system that includes one more sensors disposed in each heating zone, or within the cart **10** itself, an input device for the user to select the desired temperature at steady state within the heating zone, and a control system configured to adjust the heat output within each zone to achieve the desired temperature. In some embodiments, the controller may selectively provide or secure current to the one or more heaters **60** disposed within each zone to control the temperature of the zone. In some embodiments, the control system may include or operate in conjunction with a display that provides an indication of a temperature upon or proximate to each of the plurality of shelves **21** (or representative shelves within a specific heat zone). The control system **200** may include or communicate with an input device for the user to select a desired temperature within the specific shelf **21** or heat zone, or the user may additionally select a desired heat up rate upon a shelf or a heat zone. In some embodiments, the sensor and input device may be wired in series with the infinite switches **210** such that the sensor and input device control the percentage of time that the infinite switches operate, which provides the user with a simple and relatively inexpensive way to control the operation and temperature of the cart, and allow the user to operate the cart to achieve a consistent temperature when the ambient temperature where the cart is located may vary dramatically.

[0028] While the preferred embodiments of the invention have been described, it should be understood that the invention is not so limited and modifications may be made without departing from the invention. The scope of the invention is defined by the appended claims, and all devices that come within the meaning of the claims, either literally or by equivalence, are intended to be embraced therein.

What is claimed is:

1. A cabinet configured to receive and support a plurality of trays comprising:

a housing defining an enclosure with top, bottom, right, and left walls;

a plurality of racks disposed within the housing in a vertically spaced arrangement; and

a plurality of heaters disposed in conjunction with the plurality of racks, with at least one of the plurality of heaters being disposed in conjunction with each of the plurality of racks;

the plurality of heaters being configured to operate on a duty cycle to maintain the racks within a specified desired temperature range.

2. The cabinet of claim **1**, further comprising a plurality of planar elongate sheets slidably mounted within the housing, wherein each of the plurality of sheets are received proximate one of the plurality of racks.

3. The cabinet of claim **2**, wherein each of the sheets in combination with a rack disposed directly below the respective sheet are configured to define a holding volume, wherein the holding volume is sized to closely receive a conventional restaurant pan therebetween.

4. The cabinet of claim **3**, wherein each of the sheets are configured to contact a plurality of top edges of the pan disposed thereunder and substantially enclose an inner volume of the pan.

5. The cabinet of claim **4**, wherein the pan is removable from the holding volume when in contact with the sheet directly above the pan.

6. The cabinet of claim **4**, wherein the sheet is removable from the holding volume when in contact with the pan disposed directly below the sheet.

7. The cabinet of claim **1**, wherein the plurality of heaters each are controlled by an infinite switch.

8. The cabinet of claim **1**, wherein the plurality of racks comprise a plurality of planar members that enclose the respective heater disposed in conjunction with the respective rack.

9. The cabinet of claim **7**, wherein the plurality of heaters are organized into a plurality of pairs of heaters with a single infinite switch controlling a respective pair of heaters.

10. A cabinet configured to receive and support a plurality of trays therein, comprising:

a housing defining an enclosure with a top, a bottom, and right and left sides disposed between the top and bottom;

a plurality of shelves disposed within the enclosure and disposed between the right and left sides in a spaced relationship;

one or more heaters disposed in conjunction with each of the plurality of shelves;

a cover disposed directly below at least some of the plurality of shelves, and configured to be slidably connected with respect to the shelf for selective placement into the enclosure or removal from the shelf; and

a control system in electrical communication with the one or more heaters, configured to operate the one or more heaters in a predetermined manner.

11. The cabinet of claim **10**, wherein the control system is configured to selectively operate the one or more heaters to maintain a specified steady state temperature within the enclosure.

12. The cabinet of claim **10**, wherein the control system is configured to selectively operate the one or more heaters to provide a constant heat output from the one or more heaters.

13. A cabinet configured to receive and support a plurality of trays therein, comprising:

a housing defining an enclosure with a top, a bottom, and right and left sides disposed between the top and bottom with substantially open front and back sides of the enclosure;

a plurality of shelves disposed within the enclosure and disposed between the right and left sides in a spaced relationship;

one or more heaters disposed in conjunction with each of the plurality of shelves;

a cover disposed directly below at least some of the plurality of shelves, and configured to be slidably connected the housing for selective placement into the enclosure or removal from the shelf; and

a control system in electrical communication with the one or more heaters, configured to operate the one or more heaters in a predetermined manner.

14. The cabinet of claim **13**, wherein the cover is slidably connected to the respective shelf.

* * * * *