US 20160073821A1

(19) United States

(12) Patent Application Publication

Shei et al.

(10) Pub. No.: US 2016/0073821 A1

(43) Pub. Date: Mar. 17, 2016

(54) **PAN STORAGE APPARATUS**

(71) Applicant: **DUKE MANUFACTURING CO.**, St. Louis, MO (US)

(72) Inventors: **Steven Shei**, Fort Wayne, IN (US); **Ralph Macy**, St. Peters, MO (US); **Douglas M. Lewis**, St. Charles, MO (US)

(21) Appl. No.: **14/855,924**

(22) Filed: **Sep. 16, 2015**

Related U.S. Application Data

(60) Provisional application No. 62/051,479, filed on Sep. 17, 2014.

Publication Classification

(51) **Int. Cl.**

A47J 36/34 (2006.01)

A47J 36/12 (2006.01)

(52) **U.S. Cl.**

CPC . *A47J 36/34* (2013.01); *A47J 36/12* (2013.01)

(57) **ABSTRACT**

Pan support apparats and associated methods. A pan is removably receivable in at least one pan storage space of the pan storage apparatus. A cover is supported in the pan storage space for covering an open top of the pan. The cover is removably supported in the pan storage space.

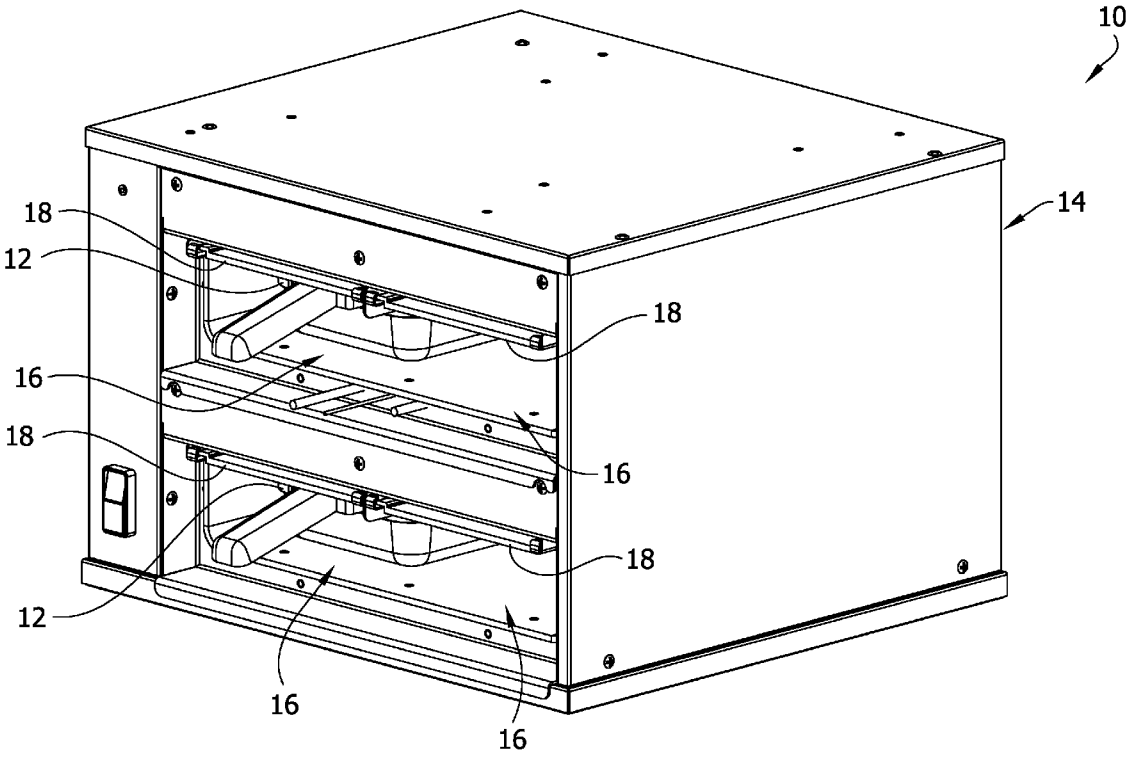

Duke Manufacturing Co. EX1011
U.S. Patent No. 10,852,002

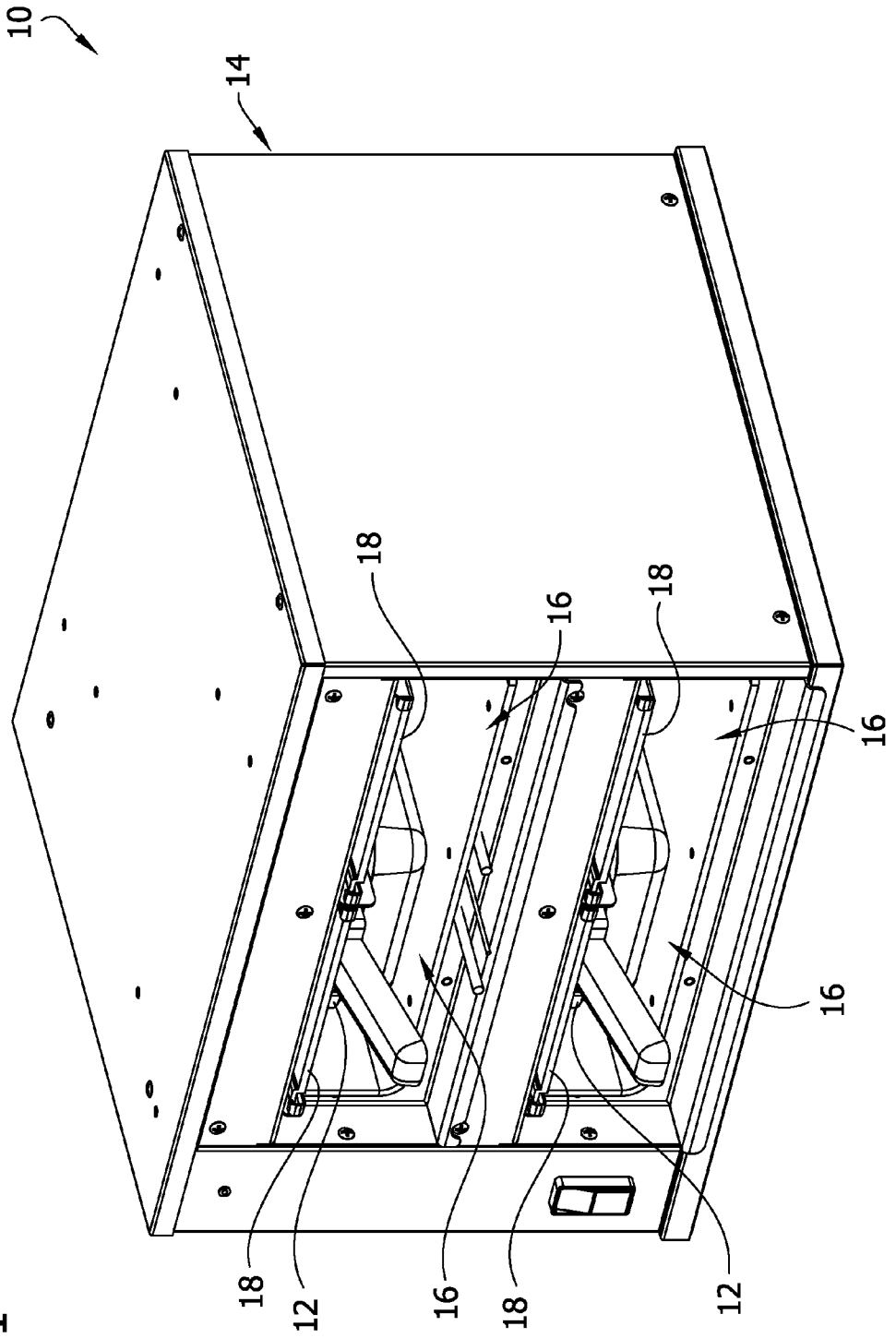

FIG. 1

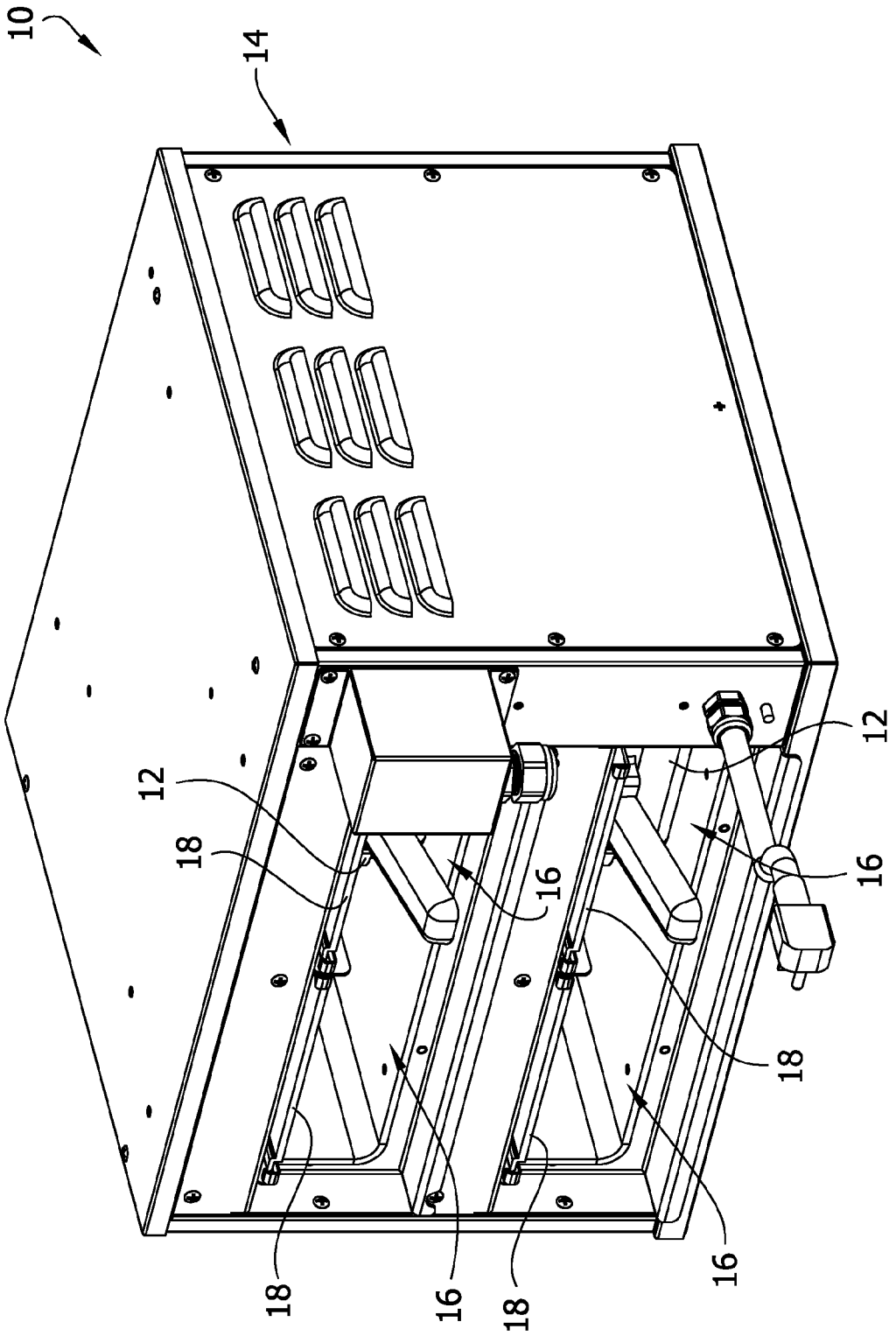

FIG. 2

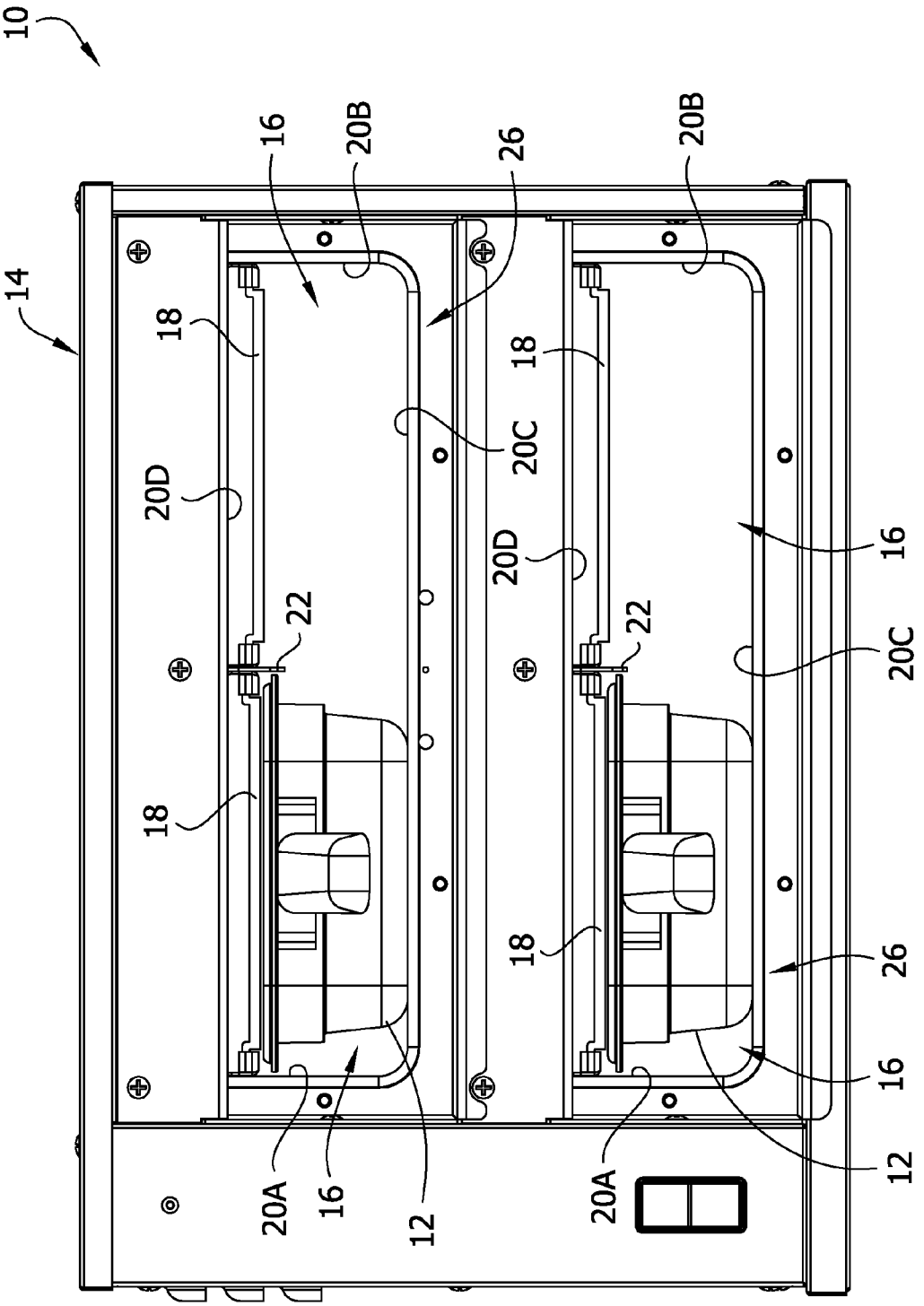
10
14
16
20B
26
20B
18
18
20C
20D
20D
16
22
22
20C
18
18
26
16
20A
16
12
20A
12

FIG. 3

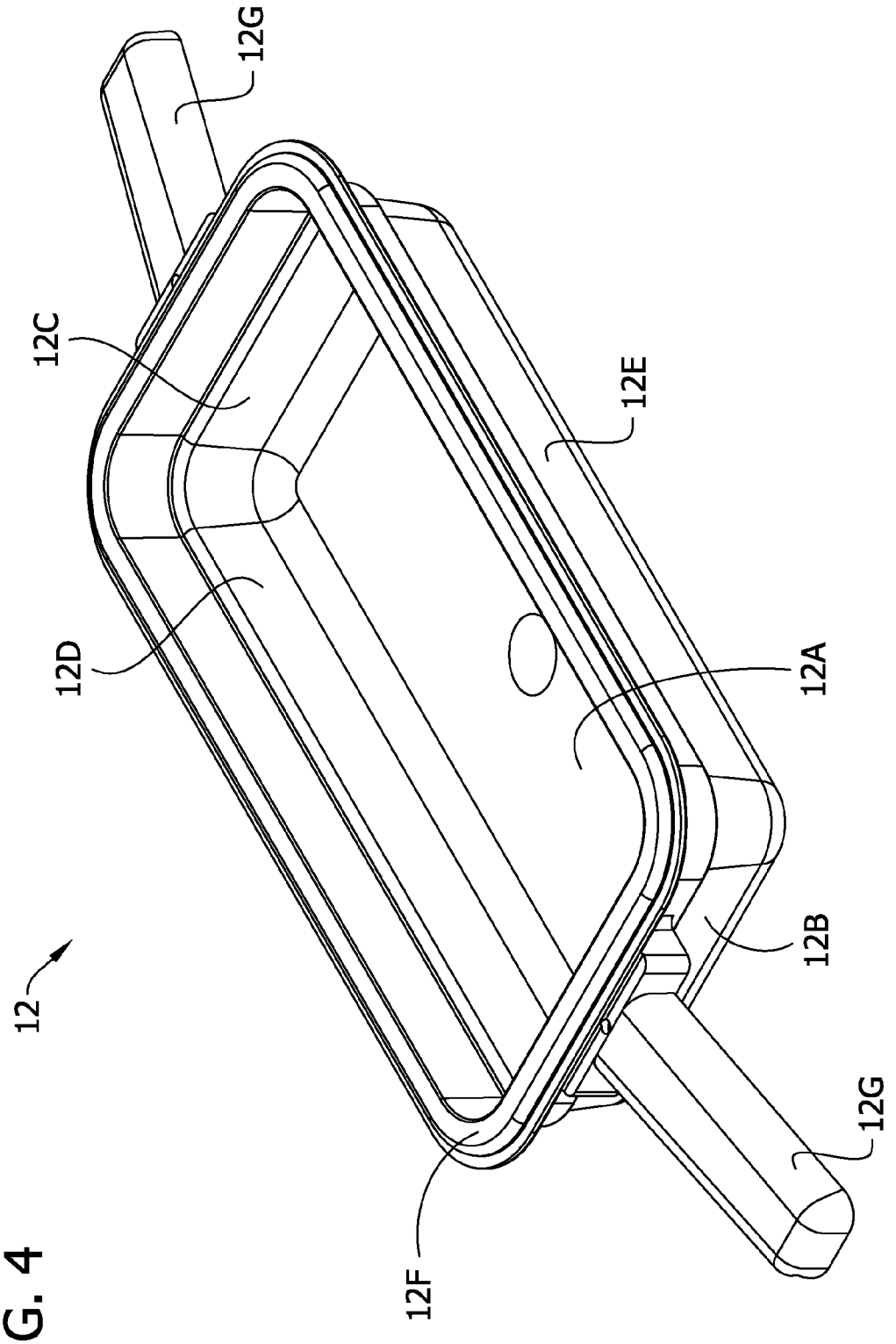

FIG. 4

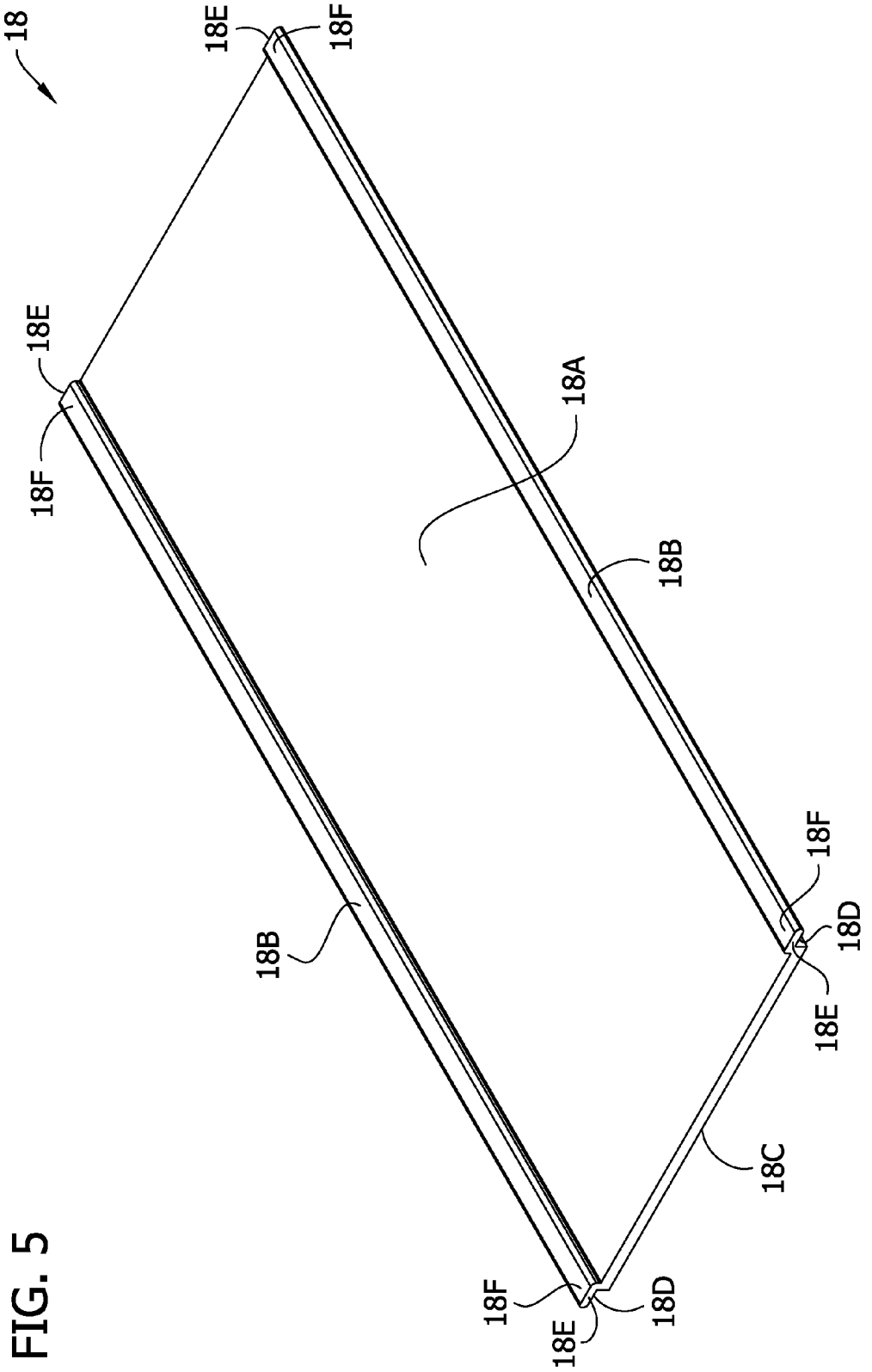

FIG. 5

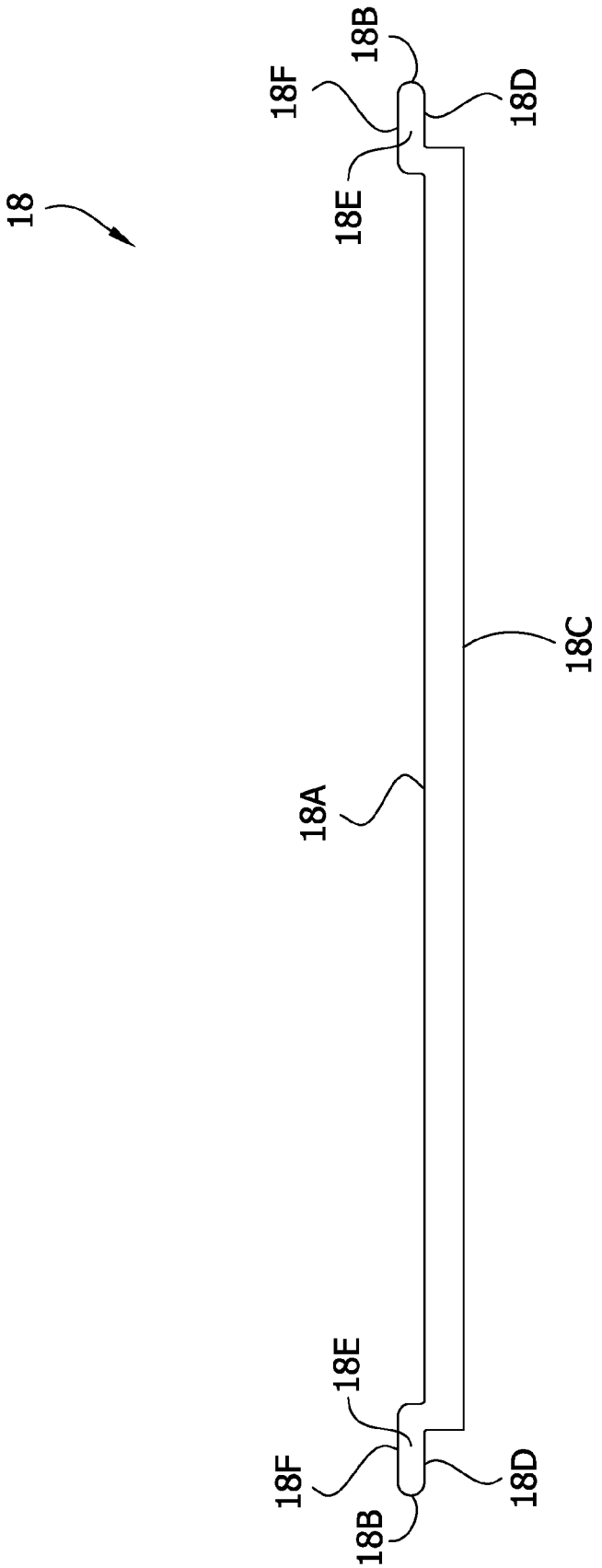

FIG. 6

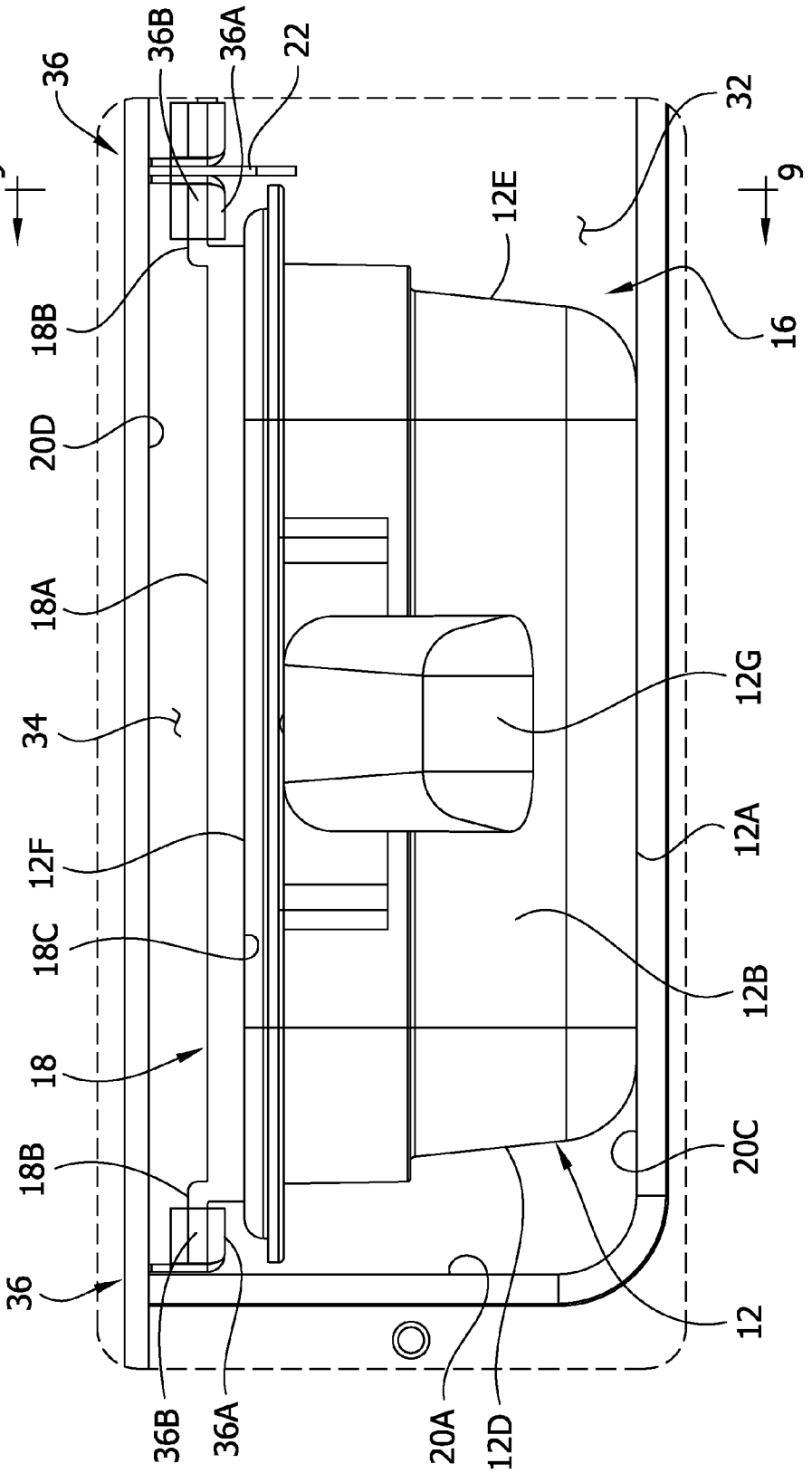
36
9
36B
36A
22
18B
20D
18A
34
12F
18C
18
18B
36
36B
36A
20A
12D
12
20C
12B
12A
12G
16
12E
32
9

FIG. 7

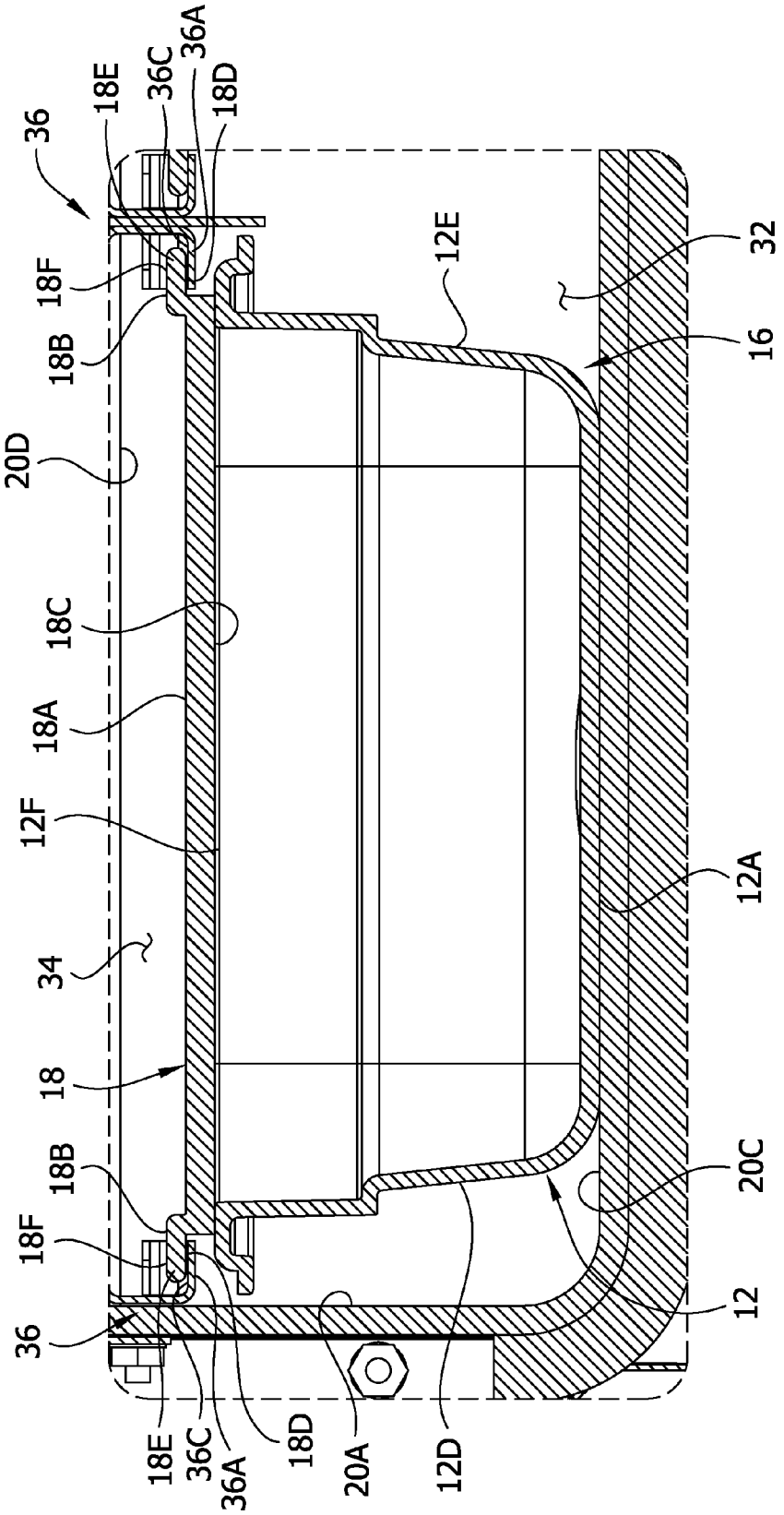
36
18E
36C
36A
18D
18F
18B
20D
18C
18A
12F
34
18
18B
18F
36
18E
36C
36A
18D
20A
12D
12E
32
16
12A
20C
12

FIG. 8

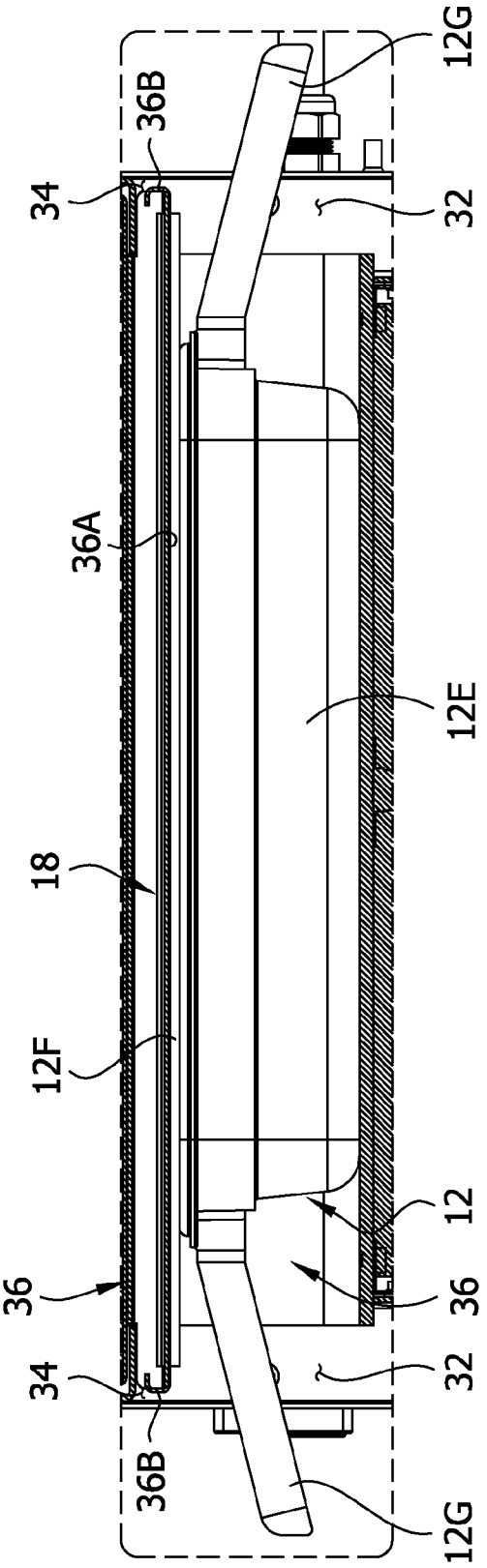

FIG. 9

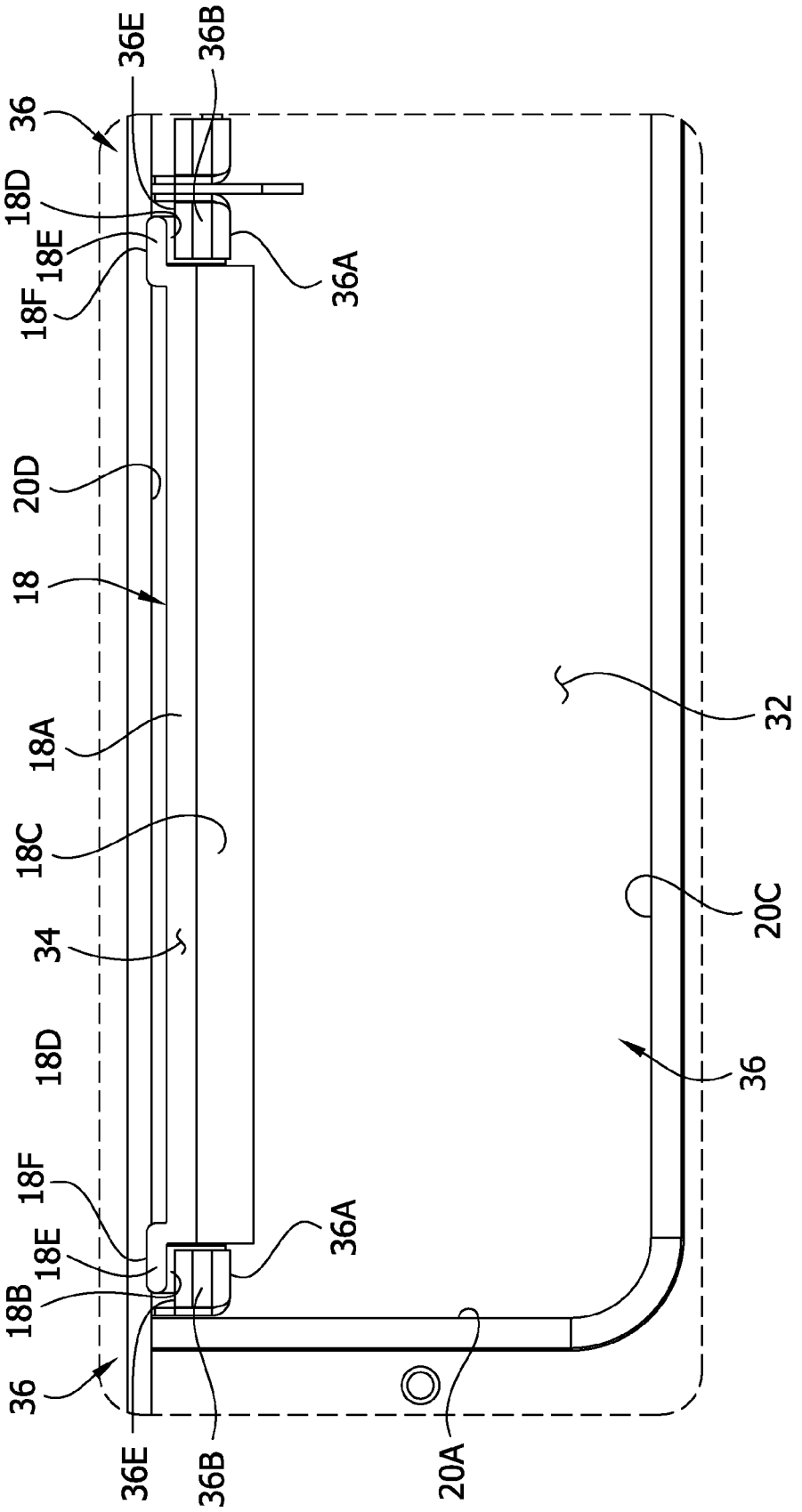
36
18D
18E
18F
20D
18
18A
18C
34
18D
18F
18E
18B
36
36E
36B
36E
36B
36A
36A
20A
32
20C
36

FIG. 10

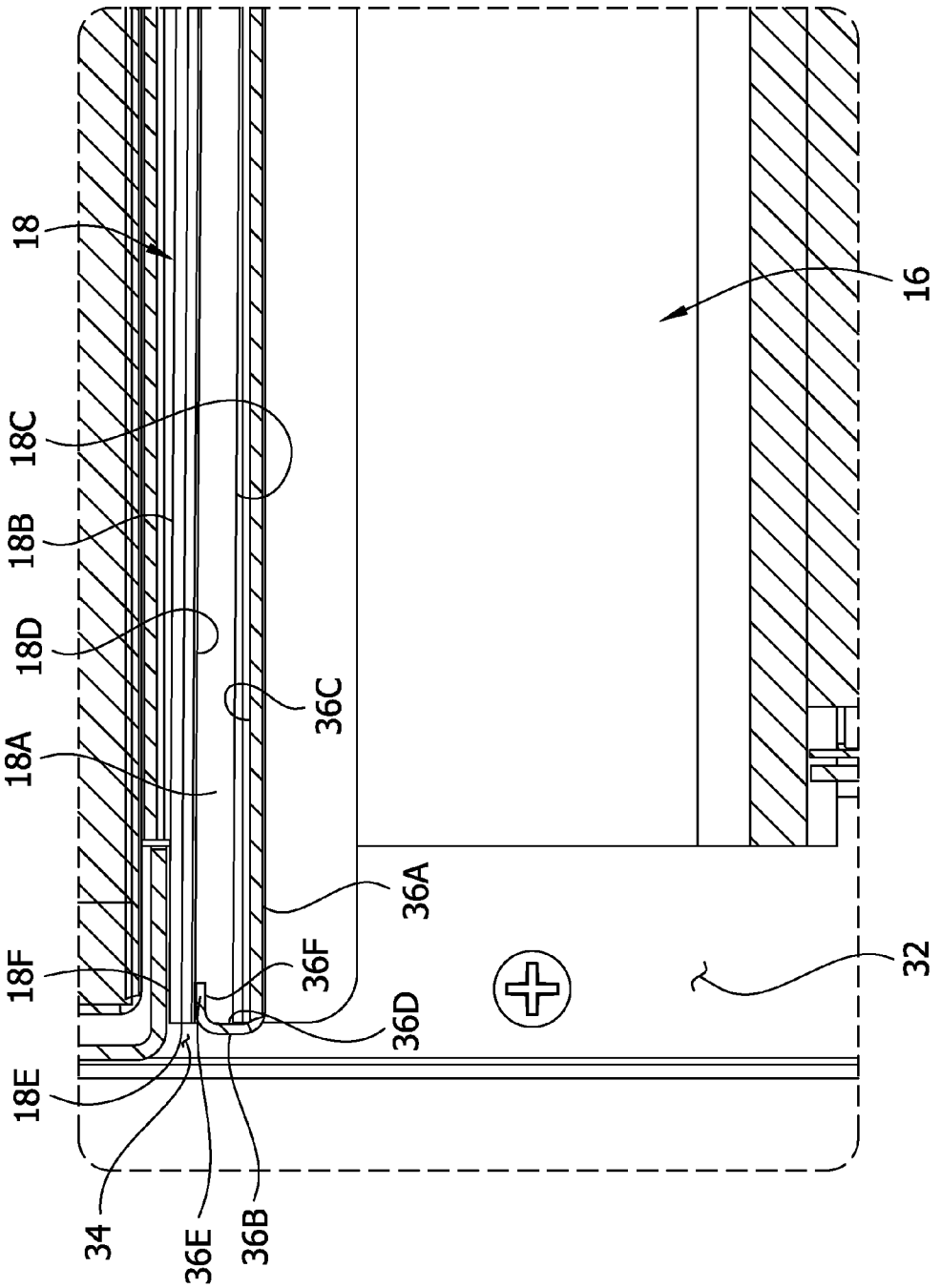

FIG. 11

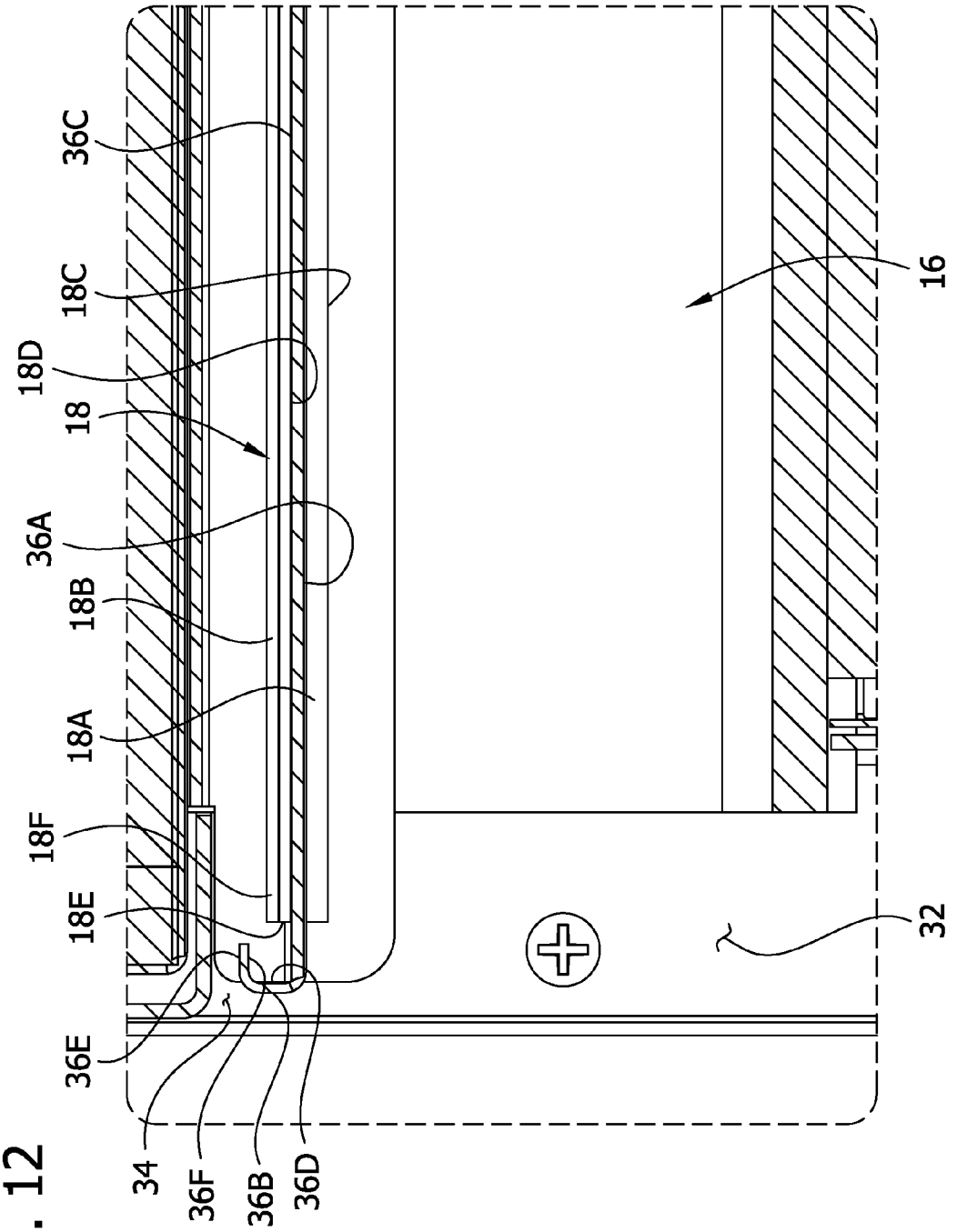

FIG. 12

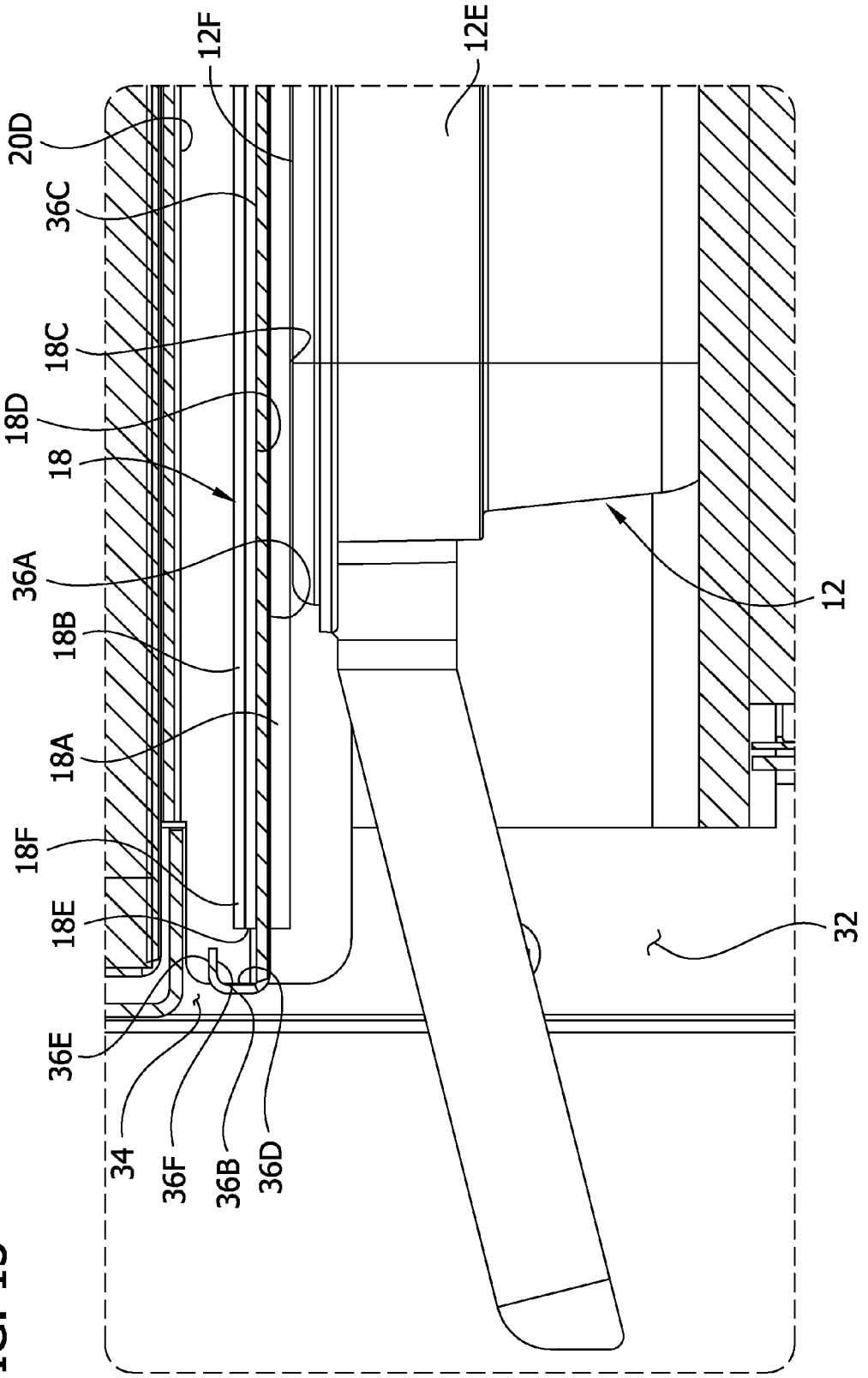
20D
36C
18C
18D
18
36A
18B
18A
18F
18E
36E
34
36F
36B
36D
12F
12E
12
32

FIG. 13

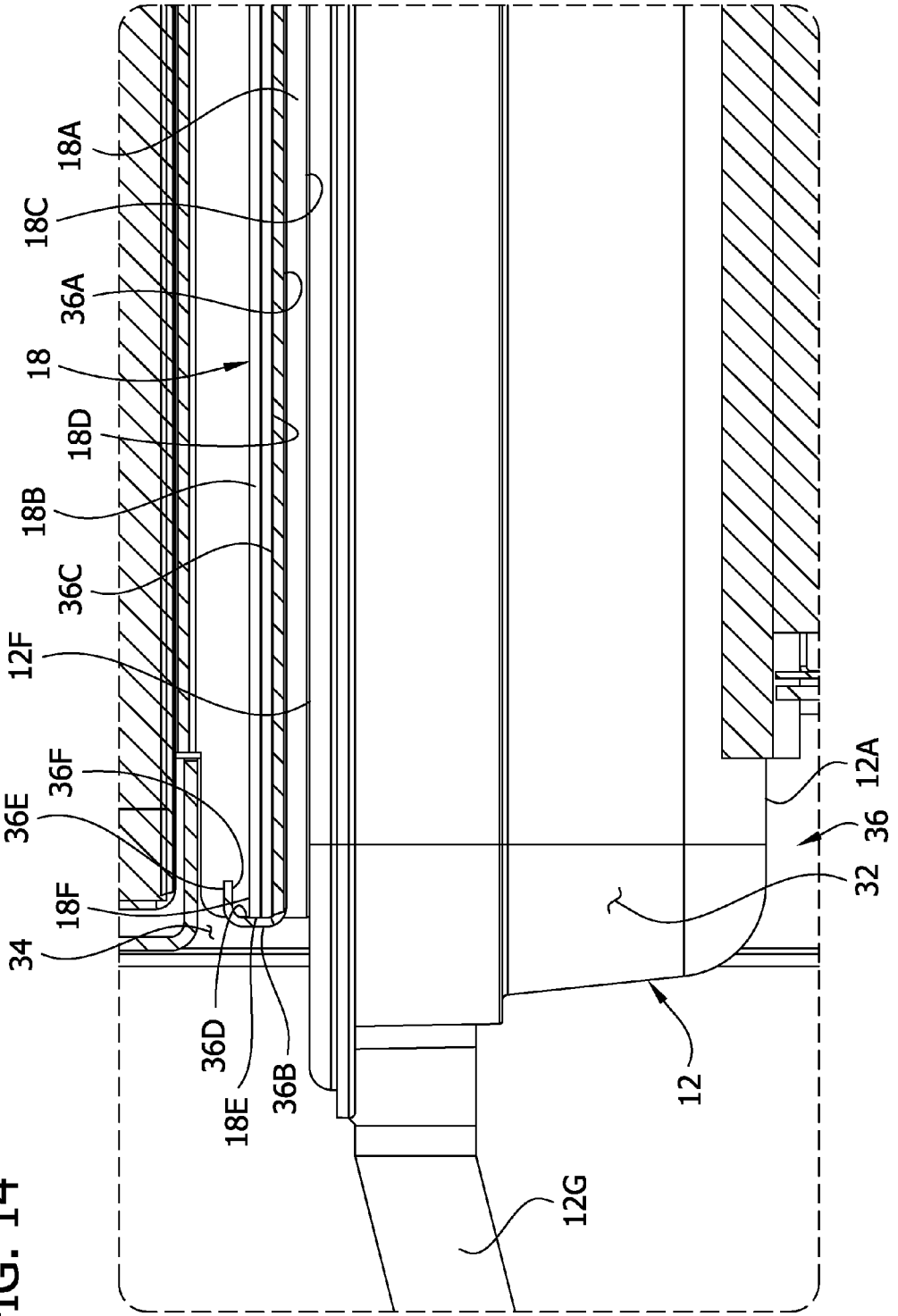
18A
18C
36A
18
18D
18B
36C
12F
36F
36E
18F
34
36D
18E
36B
12G
12
32
36
12A

FIG. 14

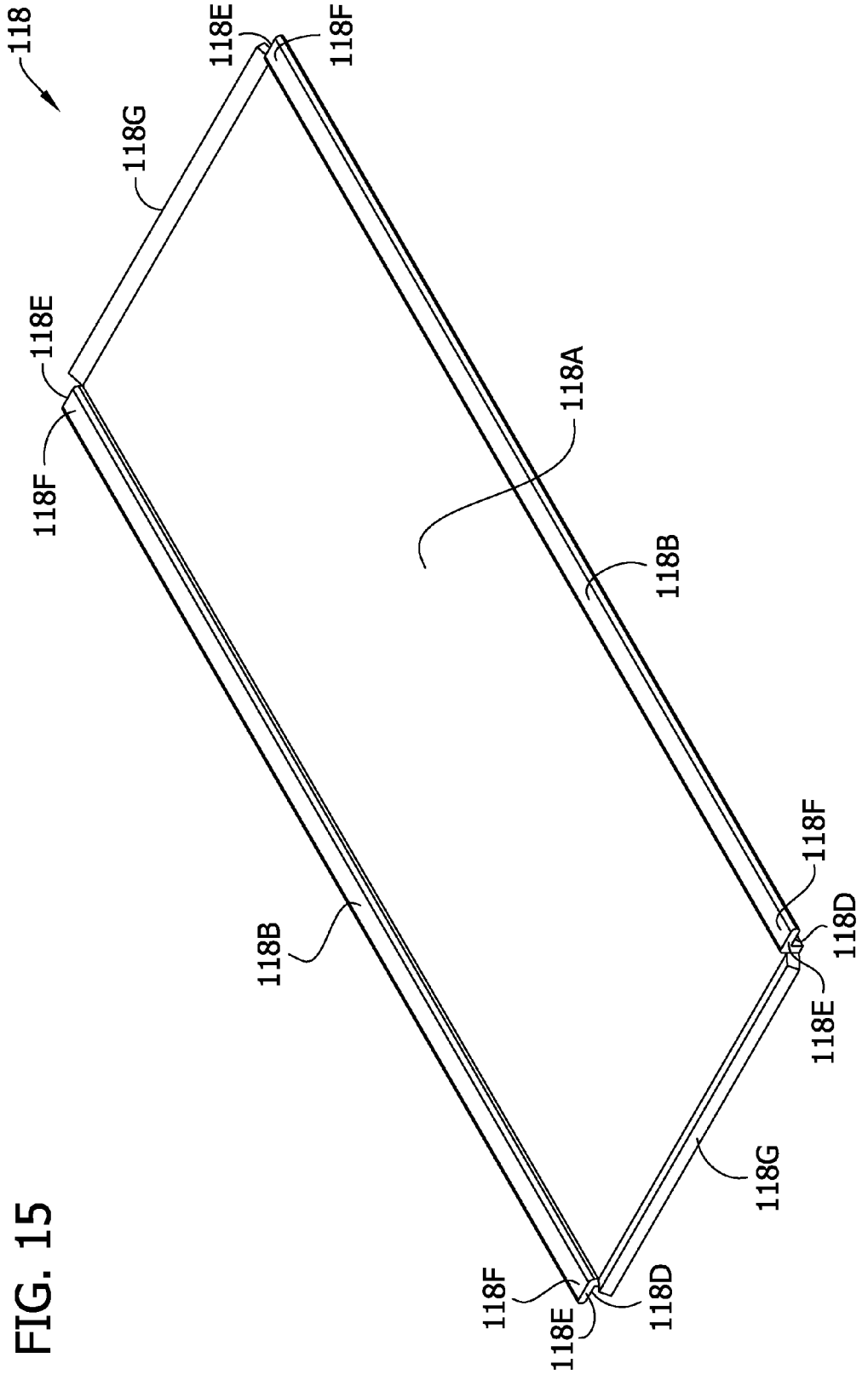
118
118E
118F
118G
118E
118F
118A
118B
118B
118F
118D
118E
118G
118F
118E
118D

FIG. 15

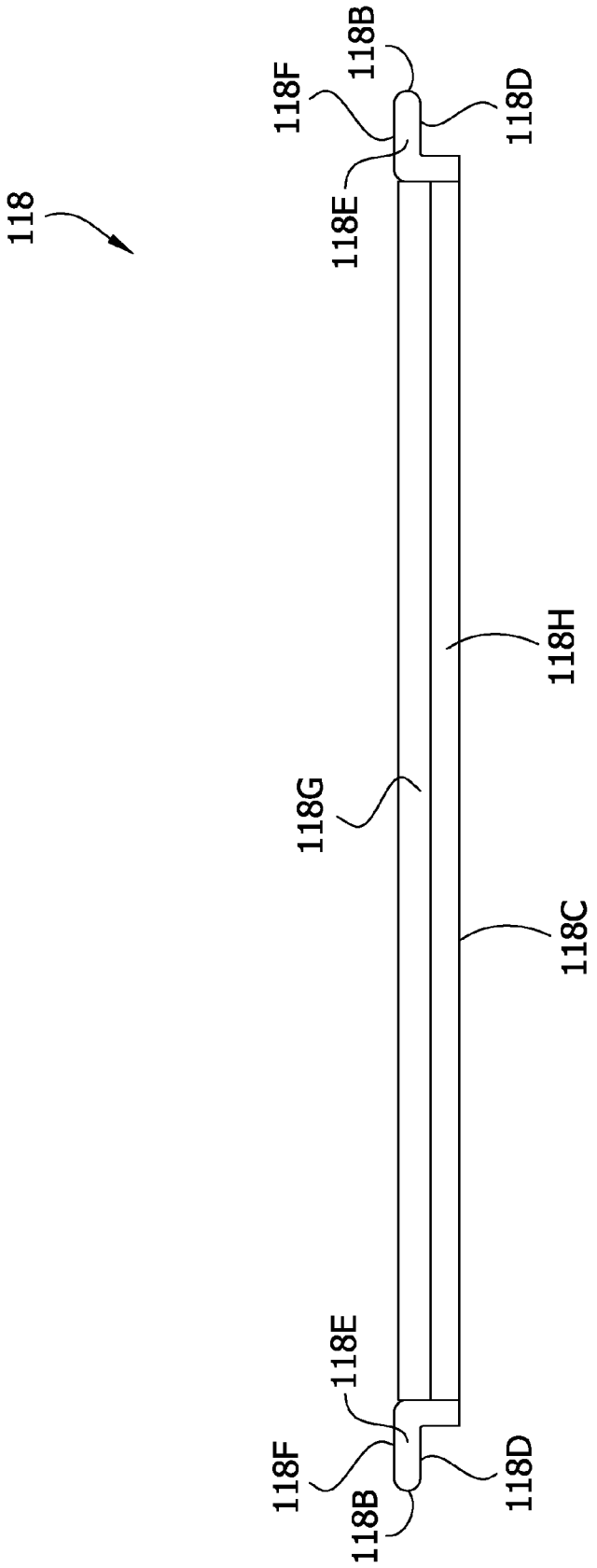

FIG. 16

PAN STORAGE APPARATUS

CROSS-REFERENCE TO RELATED APPLICATION

[0001] This application claims priority to U.S. Provisional Patent Application No. 62/051,479, filed Sep. 17, 2014, which is hereby incorporated by reference in its entirety.

FIELD

[0002] The present invention generally relates to pan storage and, more particularly, to apparatus and methods for supporting and covering open top pans.

BACKGROUND

[0003] Many types of containers have an open top and a lid for covering the open top for storing items therein. For example, some containers having an open top and lid may be used for storing food. It may be desirable to store food in such a container before preparing, serving, and/or consuming the food.

SUMMARY

[0004] One aspect of the present invention is directed to apparatus for storing an open top pan. The apparatus includes a pan storage space having a front pan receiving opening sized to permit the pan to be received in the pan storage space from the front pan receiving opening. The apparatus includes at least one slide surface in the pan storage space constructed to slidably receive and support the pan on the at least one slide surface. The apparatus includes a cover for at least partially covering the open top of the pan. The cover has a front end, a rear end, and left and right sides. The pan storage space includes a front cover receiving opening at least partially above the front pan receiving opening. The front cover receiving opening is sized to permit the cover to be received in the pan storage space from the front cover receiving opening. At least one cover support surface is positioned for supporting the cover in the pan storage space when the cover is received in the pan storage space from the front cover receiving opening. The apparatus includes at least one retainer blocking a forward portion of the pan storage space. The at least one retainer includes a cover retaining surface constructed for engaging a retainer engagement surface of the cover to retain the cover in the pan storage space. The cover and the at least one retainer are constructed to permit the retainer engagement surface of the cover to pass over the cover retaining surface as the cover is moved rearward with respect to the retainer into the pan storage space from the front cover receiving opening.

[0005] Another aspect of the present invention is directed to a method of manipulating a pan and a cover for the pan. The method includes inserting the cover in a pan storage space from a front cover receiving opening of the pan storage space. The cover is supported in the pan storage space on at least one cover support surface. The method includes inserting the pan in the pan storage space from a front pan receiving opening of the pan storage space. Inserting the cover in the pan storage space includes passing the cover at least partially above a cover retainer in the pan storage space such that a retainer engagement surface of the cover passes rearward over a cover retaining surface of the retainer.

[0006] Other objects and features of the present invention will be in part apparent and in part pointed out herein.

BRIEF DESCRIPTION OF THE DRAWINGS

[0007] FIG. **1** is a front perspective of a pan storage apparatus embodying aspects of the present invention;

[0008] FIG. **2** is a rear perspective of the pan storage apparatus of FIG. **1**;

[0009] FIG. **3** is a front elevation of the pan storage apparatus;

[0010] FIG. **4** is a perspective of a pan for use with the pan storage apparatus;

[0011] FIG. **5** is a perspective of a pan cover of the pan storage apparatus;

[0012] FIG. **6** is a front elevation of the pan cover of FIG. **5**;

[0013] FIG. **7** is a front elevation of a portion of the pan storage apparatus showing a pan received in a pan storage space under a pan cover;

[0014] FIG. **8** is a section taken widthwise of the portion of the pan storage apparatus and pan of FIG. **7**;

[0015] FIG. **9** is a section taken lengthwise of the portion of the pan storage apparatus and pan of FIG. **7**;

[0016] FIG. **10** is a front elevation of the portion of the pan storage apparatus of FIG. **7** but omitting the pan and showing the cover partially received in the pan storage space;

[0017] FIG. **11** is a partial side section of the portion of the pan storage apparatus of FIG. **10**;

[0018] FIG. **12** is a view similar to FIG. **11** but showing the cover received in the pan storage space;

[0019] FIG. **13** is a view similar to FIG. **12** but showing the pan in the pan storage space;

[0020] FIG. **14** is a view similar to FIG. **13** but showing the pan partially removed from the pan storage space;

[0021] FIG. **15** is a perspective of a second embodiment of a pan cover embodying aspects of the present invention; and

[0022] FIG. **16** is a front elevation of the pan cover of FIG. **15**.

[0023] Corresponding reference characters indicate corresponding parts throughout the drawings.

DETAILED DESCRIPTION

[0024] Referring to the drawings, FIGS. **1-3** illustrate a pan storage apparatus, generally designated by the reference number **10**, embodying aspects of the present invention. For example without limitation, the pan storage apparatus **10** may be used in the food service industry for food storage, such as for storing food in one or more pans **12** in an ambient, cool, or warm temperature environment. As will become apparent, contents stored in a pan **12** in the pan storage apparatus **10** can be accessed by pulling the pan forward from a stowed position to expose an open top of the pan and its contents therein, and the pan can be pushed rearward to return the pan to its stowed position, or the pan can be removed from the pan storage apparatus. It will be understood the pan storage apparatus **10** may be used for other purposes without departing from the scope of the present invention.

[0025] In the illustrated embodiment, the pan storage apparatus **10** comprises a housing or cabinet **14**. The housing **14** includes top, bottom, left, right, front, and rear walls, defining an interior therein. The housing **14** includes an upper compartment and a lower compartment, each including two pan storage spaces **16**. Two pans **12** are shown received in respective pan storage spaces **16**. As will be explained in further detail below, pan covers **18** are supported in the pan storage spaces **16** for covering pans **12** thereunder. Four pan covers **18** are shown in respective pan storage spaces. Both of the com-

partments have an open front and an open back permitting pans **12** to be inserted in and accessed from either the front or back of the housing. Other configurations and arrangements (e.g., permitting access from the front only) may be used without departing from the scope of the present invention. Referring to FIG. **3**, each compartment includes a left side wall **20**A, a right side wall **20**B, a bottom wall **20**C, and a top wall **20**D. The compartments also include a partition **22** that partially partitions the pan storage spaces **16** from each other. It will be understood that compartments bound by more or fewer walls (e.g., only a bottom wall) and having other configurations can be used without departing from the scope of the present invention.

[0026] In the illustrated embodiment, the pan storage apparatus **10** is configured for holding food at a warm temperature. As shown in FIG. **3**, each compartment includes a heat sink **26** forming the bottom wall **20**C and the left and right side walls **20**A, **20**B of the compartment. The heat sink **26** can be made of a metal material and be heated by any suitable means, such as by a resistance heating element for providing heat to the compartment. Moreover, the compartments include upper infrared heat emitters (not shown) for heating the food from above through the top wall **20**D. Other suitable heating means could also be used. Moreover, it will be understood that the food may be held in an ambient or cool temperature environment without departing from the scope of the present invention.

[0027] Referring to FIG. **4**, one of the pans **12** is shown in closer detail. The pan **12** is generally rectangular and includes a bottom wall **12**A, front wall **12**B, rear wall **12**C, left and right side walls **12**D, **12**E, defining an interior of the pan, and an open top providing access to the interior. The pan **12** includes a rim **12**F extending around the periphery of the pan adjacent the open top. The rim **12**F extends outboard of the front, rear, and left and right side walls **12**B-**12**E and includes front, rear, left, and right rim portions corresponding to the respective sides of the pan **12**. The pan **12** may be made of any suitable material, such as a type of plastic. Handles **12**G are provided at the front and rear of the pan **12**. Pans having other configurations may be used without departing from the scope of the present invention.

[0028] Referring to FIGS. **5** and **6**, one of the covers **18** is shown in closer detail. The cover **18** is generally rectangular and includes a front end, rear end, and left and right sides. The cover **18** includes a generally rectangular main body or pan covering section **18**A, and left and right arms **18**B. As will become apparent, the cover **18** is selectively receivable in and removable from the pan storage spaces **16**. The cover **18** is constructed to permit the pan **12** to be slidably received under the cover in the pan storage space **16** for covering the pan. The cover **18** may be formed of any suitable material, such as aluminum, another type of metal, or a type of plastic.

[0029] The pan covering section **18**A includes a generally rectangular body having a width and a length desirably both greater than a thickness of the rectangular body. The bottom of the pan covering section **18**A includes a generally rectangular pan engagement surface **18**C constructed to engage the pan rim **12**F around the periphery of the pan rim to substantially seal (e.g., by the force of gravity on the cover **18**) around the open top of the pan. In the illustrated embodiment, the bottom of the pan covering section **18**A is substantially planar. Other configurations may be used without departing from the scope of the present invention. For example, the cover **18** may not be constructed to engage the pan **12** and/or may be constructed to permit venting from the open top of the pan. It will be appreciated that the cover can at least partially cover the open top of the pan without engaging the pan or engaging only part of the pan rim for permitting the interior of the pan to vent out of the open top.

[0030] The cover arms **18**B extend laterally from the left and right sides of the pan covering section **18**A. The arms **18**B extend between the front and back ends of the pan covering section **18**A, and the arms are offset above the pan covering section. Each arm **18**B includes a support engagement surface **18**D on a bottom side of the arm. The support engagement surfaces **18**D face downward and extend between the front and rear ends of the cover **18** on respective left and right sides of the pan covering section **18**A. The pan covering section **18**A is positioned between the left and right support engagement surfaces **18**D, and the pan engagement surface **18**C of the pan covering section **18**A is offset below the left and right support engagement surfaces. The purpose and function of the support engagement surfaces **18**D will become apparent. Moreover, the arms **18**B include retainer engagement surfaces **18**E on front and rear ends of the arms. The retainer engagement surfaces **18**E on the front end of the cover **18** face forward, and the retainer engagement surfaces **18**E on the rear end face rearward. The arms **18**B also include upward facing keeper engagement surfaces **18**F adjacent the front and rear ends of the arms, above the retainer engagement surfaces **18**E and the support engagement surfaces **18**D. The purpose and function of the retainer engagement surfaces **18**E and keeper engagement surfaces **18**F will become apparent. Other types and configurations of covers may be used without departing from the scope of the present invention. For example, the cover may be substantially planar (e.g., not have offset arms). In such a configuration, the cover may still include left and right support engagement surfaces, but they may not be offset with respect to the pan engagement surface of the pan covering section.

[0031] One of the pan storage spaces **16** having a pan **12** and cover **18** therein is shown in closer detail in FIG. **7**, which is a front elevation of the pan storage space, in FIG. **8**, which is a section of the pan storage space taken along the width of the pan storage space, and in FIG. **9**, which is a section of the pan storage space taken along the length of the pan storage space (as indicated in FIG. **7**). The pan storage space **16** includes a top wall defined by the top wall **20**D of the compartment, a bottom wall defined by the bottom wall **20**C of the compartment, a left wall defined by the left wall **20**A of the compartment, and a right wall defined by the partition **22**. It will be understood that pan storage spaces bound by more or fewer walls (e.g., only a bottom wall) or having other configurations can be used without departing from the scope of the present invention.

[0032] The pan storage space **16** includes a front opening and a rear opening permitting the pan **12** and cover **18** to be inserted in the pan storage space from the front and the back of the pan storage space. The front opening will be described in further detail, with the understanding that the rear opening has essentially the same configuration. The front opening includes a pan receiving opening **32** sized to permit the pan to be received in the pan storage space **16** from the front of the pan storage space through the pan receiving opening. The bottom wall **20**C of the pan storage space **16** defines a slide surface constructed to slidably receive and support the bottom of the pan **12** on the slide surface in the pan storage space. As the pan **12** is inserted in the pan storage space **16** from the pan

receiving opening **32**, the pan can be slid along the slide surface **20**C and rest in the pan storage space on the slide surface. Desirably, the pan receiving opening **32** has a width and a height generally corresponding to or greater than a width and a height of the pan **12**, and the slide surface **20**C has a width and a length at least as great as the width and length of the bottom of the pan. Other pan receiving openings and slide surfaces and dimensions can be used without departing from the scope of the present invention. For example, the slide surface may comprise two slide surfaces configured to slidably receive and support the rim of the pan.

[0033] The front opening of the pan storage space **16** also includes a cover receiving opening **34** located above the pan receiving opening **32**. In the illustrated embodiment, the cover receiving opening **34** and pan receiving opening **32** are non-overlapping sections of the front opening. The cover receiving opening **34** is sized to permit the cover **18** to be received in the pan storage space **16** from the front of the pan storage space through the front cover receiving opening **34**. Desirably, the cover receiving opening **34** has a width and a height generally corresponding to or greater than a width and height of the cover **18**.

[0034] Other configurations of pan and cover receiving openings **32**, **34** can be used without departing from the scope of the present invention. For example, the pan and cover receiving openings can be separated (e.g., by a horizontal partition or bar). Moreover, the pan and cover receiving openings can at least partially overlap each other without departing from the scope of the present invention. For example, the cover receiving opening may overlap an upper portion of the pan receiving opening.

[0035] Referring to FIGS. **7-9**, cover support structure is provided inside the pan storage space **16** for supporting the cover **18** in the pan storage space **16**. The cover support structure includes left and right cover holders **36** adjacent respective left and right sides of the pan storage space **16**. The cover holders **36** each include a cover support **36**A in the form of a rail extending between the front and rear ends of the pan storage space **16**, and the cover holders each include front and rear cover retainers **36**B adjacent the front and rear ends of the pan storage space at the front and rear ends of the cover supports **36**A. The cover supports **36**A include respective upward facing elongate cover support surfaces **36**C that extend between the front and rear of the pan storage space **16** adjacent the left and right sides of the pan storage space. The cover support surfaces **36**C are positioned for supporting the cover **18** in the pan storage space **16** when the cover is received in the pan storage space from the front cover receiving opening **34**. When the cover **18** is received in the pan storage space **16**, and the pan **12** is not received in the pan storage space, the support engagement surfaces **18**D of the cover **18** rest on the cover support surfaces **36**C of the cover supports **36**A for supporting the cover in a position elevated above the slide surface **20**C. As described in further detail below, when the pan **12** is received in the pan storage space **16**, the pan supports the cover **18** such that the support engagement surfaces **18**D are spaced above the cover support surfaces **36**C.

[0036] As will become apparent, the cover supports **36**A and the cover retainers **36**B are constructed to permit the cover **18** to be selectively received in and removed from the pan storage space **16** and to retain the cover in the pan storage space for preventing inadvertent removal of the cover from the pan storage space. Referring to FIGS. **7** and **8**, left and right cover retainers **36**B are provided adjacent the front opening. The front cover retainers **36**B will be discussed in further detail, with the understanding the rear cover retainers have essentially the same configuration. The front cover retainers **36**B include respective rearward facing cover retaining surfaces **36**D (FIG. **11**). The cover retaining surfaces **36**D are constructed and positioned for engaging the retainer engagement surfaces **18**E of the cover **18** when the cover is in the pan storage space **16** for retaining the cover in the pan storage space. As shown in FIG. **7**, the left and right retainers **36**B block upper forward portions of the pan storage space **16**. In the illustrated embodiment, the cover retaining surfaces **36**D are located inside the pan storage space **16** adjacent the front end of the pan storage space. The retainers **36**B are immovable or fixed in position with respect to the cover supports **36**A. The cover retaining surfaces **36**D are positioned higher than and extend above or upward from the cover support surfaces **36**C. As will become apparent, the cover retaining surfaces **36**D are positioned to be in horizontal registration with the retainer engagement surfaces **18**E of the cover **18** (i.e., the cover is in a retained position) when the cover rests on the cover supports **36**A and when the pan **12** supports the cover off the cover supports.

[0037] The cover retainers **36**B also include respective keepers **36**E for retaining the cover **18** in the retained position by limiting upward movement of the retainer engagement surfaces **18**E with respect to the cover retaining surfaces **36**D. The keepers **36**E include cover keeping surfaces **36**F behind and extending rearward from the respective cover retaining surfaces **36**D above and facing downward toward the cover support surfaces **36**C for engagement with upper keeper engagement surfaces **18**F of the cover **18** on the arms **18**B of the cover adjacent the front end of the cover.

[0038] As is now apparent, the cover receiving opening **34** includes a central portion extending between the left and right cover holders **36** sized for receiving the pan covering section **18**A and left and right portions above the cover retainers **36**B sized for receiving the arms **18**B. The left and right portions of the cover receiving opening **34** define respective gaps above the cover retainers **36**B and below the top wall **20**D to permit the arms to be moved into and out of the pan storage space without moving the cover retainers.

[0039] It will be appreciated that the rear cover retainers **36**B have a similar construction. In the illustrated embodiment, the cover supports **36**A and the cover retainers **36**B, including the keepers **36**E, are formed as one piece of metal and are immovable with respect to each other, but other configurations can be used without departing from the scope of the present invention.

[0040] An example method of manipulating the pan **12** and cover **18** will now be described with reference to FIGS. **10-14**. FIGS. **10** and **11** illustrate the pan storage space **16** having the cover **18** partially received therein and not having the pan **12** received therein. It will be understood that the cover **18** can be received in the pan storage space **16** by inserting the rear end of the cover in the cover receiving opening **34** and pushing the cover rearward until the front end of the cover is received in the pan storage space. The cover retainers **36**B are positioned and the cover receiving opening **34** is sized and shaped such that the cover **18** can be passed into the pan storage space **16** without moving the cover retainers **36**B. The arms **18**B of the cover **18** pass above the retainers **36**B, and the pan covering section **18**A passes between the retainers. FIGS. **10** and **11** illustrate the cover **18** almost moved to its retained position in

the pan storage space **16**. The support engagement surfaces **18**D adjacent the rear end of the cover **18** may rest on and slide along the cover support surfaces **36**C as the cover is pushed into the pan storage area **16**. In FIGS. **10** and **11**, the support engagement surfaces **18**D adjacent the front end of the cover **18** are shown resting on the keepers **36**E. The retainer engagement surfaces **18**E are shown above the cover retaining surfaces **36**D as the retainer engagement surfaces pass over the cover retaining surfaces. After the retainer engagement surfaces **18**E pass the keepers **36**E, as shown by comparison of FIGS. **11** and **12**, the front end of the cover **18** falls downward such that the retainer engagement surfaces **18**E fall into horizontal registration with the cover retaining surfaces **36**D, and the keeper engagement surfaces **18**F are lower than the cover keeping surfaces **36**F of the keepers **36**E. The support engagement surfaces **18**D rest in flatwise engagement with the cover support surfaces **36**C, and the pan covering section **18**A is suspended by the engagement in a generally horizontal orientation in the pan storage space **16**. The pan engagement surface **18**C is offset below the cover supports **36**A to facilitate engagement of the pan **12** with the pan engagement surface without the pan engaging the cover support structure. Accordingly, the cover **18** can be moved into the pan storage space **18** from the cover receiving opening **34** and into the retained position with respect to the retainers **36**B without the retainers being moved.

[0041] To store the pan **12** in the pan storage space **16**, the pan can be inserted into the pan storage space by moving the pan through the pan receiving opening **32** and sliding it along the slide surface **20**C. In the illustrated embodiment, the rim **12**F of the pan **12** slides along the pan engagement surface **18**C of the cover **18**. As the pan **12** is received in the pan storage space **16**, as shown in FIG. **13**, the pan lifts the cover **18** upward such that the support engagement surfaces **18**D become supported by the pan **12** spaced above and out of engagement with the cover support surfaces **36**C. The cover support surfaces **36**C are located with respect to the slide surface **20**C so that the height of the pan **12** is greater than the vertical distance between the cover support surface and the slide surface so the pan lifts the cover **18** off the cover support surfaces. Desirably, when the pan **12** reaches its stowed position in the pan storage space **16**, the cover **18** covers the open top of the pan and substantially seals around the rim **12**F. In the illustrated embodiment, the cover **18** is biased against the rim **12**F by gravity only, but biasing devices such as springs, clamps, etc. may be used without departing from the scope of the present invention. As shown in FIG. **13**, when the pan **12** supports the cover **18** off the cover support surfaces **36**C, the retainer engagement surfaces **18**E are still in horizontal registration with the cover retaining surfaces **36**D (i.e., the cover is still in the retained position) for retaining the cover in the pan storage space **16**.

[0042] When it is desired to move the pan **12** from its stowed position in the pan storage space **16** to supply contents to or remove contents from the pan, the pan can be slid at least partially out of the pan storage space by grasping the handle **12**G and sliding the pan forward. The front end of the open top of the pan **12** becomes uncovered as the pan is pulled forward, exposing the contents in the pan. As shown by comparison of FIGS. **13** and **14**, the cover **18** may ride forward on the pan until the cover retaining surface **36**D of the retainers **36**B engage the retainer engagement surfaces **18**E of the cover **18** for stopping forward movement of the cover. Accordingly, the retainers **36**B retain the cover in the pan storage space **16**. When the retainer engagement surfaces **18**E engage the cover retaining surfaces **36**D, the keepers **36**E overlie the keeper engagement surfaces **18**F of the cover. If the front end of the cover **18** were to inadvertently move upward, the keeper engagement surfaces **18**F will engage the cover keeping surfaces **36**F to limit upward movement of the retainer engagement surface **18**E with respect to the cover retaining surface **36**D. Accordingly, the keepers **36**E assist in maintaining the cover **18** in the retained position. As more of the pan **12** is moved out of the pan storage space **16** the rear end of the cover **18** may fall down such that rear ends of the support engagement surfaces **18**D fall into engagement with the cover support surfaces **36**C. If the pan **12** is entirely removed from the pan storage space **16**, the support engagement surfaces **18**D will come to rest in flush engagement with the cover support surfaces **36**C along the full length of the support engagement surfaces **18**D. If desired to remove the cover **18** from the pan storage space **16** (e.g., for cleaning or replacement), the cover can be moved rearward (if necessary) so to so the keeper engagement surfaces **18**F are rearward from the cover keeping surfaces **36**F, and the cover can be lifted up off the cover support surfaces **36**C and raised such that at least the front retainer engagement surfaces **18**E are out of horizontal registration with and above the front cover retaining surfaces **36**D. This can be referred to as a non-retained position of the cover **18**. From the non-retained position, the cover **18** can be moved forward out of the pan storage space **16** through the cover receiving opening **34**, much like shown in FIGS. **10** and **11**.

[0043] Referring to FIGS. **15** and **16**, a second embodiment of a cover of the present invention is generally designated by the reference number **118**. The cover **118** of this embodiment is similar to the cover **18** of the first embodiment, and like parts are designated with like reference numbers, plus **100**. For example, the cover **118** includes a pan covering section **118**A, arms **118**B, a pan engagement surface **118**C, support engagement surfaces **118**D, retainer engagement surfaces **118**E, and keeper engagement surfaces **118**F. In this embodiment, the cover also includes front and rear cams **118**G having respective cam surfaces **118**H extending upwardly from the pan engagement surface **118**C for engaging a front of the pan rim **12**F as the pan is inserted into the pans storage space **36**. It will be appreciated the cover **118** of this embodiment can be used in place of the cover **18** as part of the pan storage apparatus **10** described above in essentially the same manner as explained above, except the inclined cam surfaces **118**H facilitate insertion of the pan **12** into the pan storage space **16** under the cover **118**.

[0044] When introducing elements of the present invention or the preferred embodiments(s) thereof, the articles "a", "an", "the" and "said" are intended to mean that there are one or more of the elements. The terms "comprising", "including" and "having" are intended to be inclusive and mean that there may be additional elements other than the listed elements.

[0045] In view of the above, it will be seen that the several objects of the invention are achieved and other advantageous results attained.

[0046] As various changes could be made in the above constructions, products, and methods without departing from the scope of the invention, it is intended that all matter contained in the above description and shown in the accompanying drawing[s] shall be interpreted as illustrative and not in a limiting sense.

What is claimed is:

1. Apparatus for storing an open top pan, the apparatus comprising,

a pan storage space having a front pan receiving opening sized to permit the pan to be received in the pan storage space from the front pan receiving opening,

at least one slide surface in the pan storage space constructed to slidably receive and support the pan on the at least one slide surface,

a cover for at least partially covering the open top of the pan, the cover having a front end, a rear end, and left and right sides,

the pan storage space including a front cover receiving opening at least partially above the front pan receiving opening, the front cover receiving opening being sized to permit the cover to be received in the pan storage space from the front cover receiving opening,

at least one cover support surface positioned for supporting the cover in the pan storage space when the cover is received in the pan storage space from the front cover receiving opening,

at least one retainer blocking a forward portion of the pan storage space, the at least one retainer including a cover retaining surface constructed for engaging a retainer engagement surface of the cover to retain the cover in the pan storage space,

the cover and the at least one retainer being constructed to permit the retainer engagement surface of the cover to pass over the cover retaining surface as the cover is moved rearward with respect to the retainer into the pan storage space from the front cover receiving opening.

2. Apparatus as set forth in claim **1** wherein the front cover receiving opening includes a gap between a top of the pan storage space and the cover retaining surface sized to permit the cover to be moved rearward through the gap into the pan storage space.

3. Apparatus as set forth in claim **1** wherein the at least one cover support surface is configured for permitting the retainer engagement surface of the cover to fall downward into horizontal registration with the cover retaining surface when the cover is received in the pan storage space.

4. Apparatus as set forth in claim **1** wherein the cover has a non-retained position in the pan storage space in which the retainer engagement surface of the cover is higher than the cover retaining surface, and the cover has a retained position in the pan storage space in which the retainer engagement surface of the cover is in horizontal registration with the cover retaining surface.

5. Apparatus as set forth in claim **4** wherein the at least one retainer includes a keeper constructed to retain the cover in the retained position.

6. Apparatus as set forth in claim **5** wherein the keeper is configured for limiting upward movement of the retainer engagement surface with respect to the cover retaining surface.

7. Apparatus as set forth in claim **1** wherein the at least one retainer is immovable with respect to the at least one slide surface.

8. Apparatus as set forth in claim **1** wherein the at least one cover support surface is positioned with respect to the at least one slide surface such that the pan supports the cover spaced above the at least one cover support surface when the pan is received in the pan storage space on the at least one slide surface.

9. Apparatus as set forth in claim **1** wherein the cover is selectively receivable in and removable from the pan storage space from the front cover receiving opening without the at least one retainer being moved.

10. Apparatus as set forth in claim **1** wherein the at least one cover support surface comprises a left cover support surface and a right cover support surface for supporting the respective left and right sides of the cover.

11. Apparatus as set forth in claim **10** wherein the cover includes left and right support engagement surfaces for engaging the respective left and right cover support surfaces, the cover including a pan covering section between the left and right support engagement surfaces, the pan covering section including a pan engagement surface offset below the left and right support engagement surfaces.

12. Apparatus as set forth in claim **1** wherein the retainer engagement surface is located adjacent the front end of the cover.

13. Apparatus as set forth in claim **1** wherein the cover retaining surface extends upward and faces in a rearward direction, and the retainer further includes a keeper including a cover keeping surface extending rearward from the cover retaining surface above the cover retaining surface.

14. Apparatus as set forth in claim **1** in combination with the pan, wherein the pan has a height dimensioned such that the pan supports the cover spaced above the at least one cover support surface when the pan is received in the pan storage space on the at least one slide surface.

15. A method of manipulating a pan and a cover for the pan, the method comprising

inserting the cover in a pan storage space from a front cover receiving opening of the pan storage space, the cover being supported in the pan storage space on at least one cover support surface, and

inserting the pan in the pan storage space from a front pan receiving opening of the pan storage space,

wherein inserting the cover in the pan storage space includes passing the cover at least partially above a cover retainer in the pan storage space such that a retainer engagement surface of the cover passes rearward over a cover retaining surface of the retainer.

16. A method as set forth in claim **15** further comprising moving the cover to a retained position with respect to the cover retainer for retaining the cover in the pan storage space.

17. A method as set forth in claim **16** wherein moving the cover to the retained position comprises, after the retainer engagement surface passes above the cover retaining surface, moving the retainer engagement surface downward into horizontal registration with the cover retaining surface.

18. A method as set forth in claim **16** wherein the cover is inserted in the pan storage space and moved to the retained position without moving the cover retainer.

19. A method as set forth in claim **16** further comprising at least partially removing the pan from the pan storage space, and while at least partially removing the pan, retaining the cover in the pan storage space by engagement of the retainer engagement surface with the cover retaining surface.

20. A method as set forth in claim **19** further comprising maintaining the cover in a retained position with respect to the cover retaining surface by limiting upward movement of the retainer engagement surface with respect to the cover retaining surface using a keeper.

* * * * *