US 20110114618A1

(19) United States

(12) Patent Application Publication

CHUNG et al.

(10) Pub. No.: US 2011/0114618 A1

(43) Pub. Date: May 19, 2011

(54) UNIVERSAL FOOD HOLDING CABINET WITH SNAP-IN ESCUTCHEONS

(75) Inventors: **TERRY TAE-IL CHUNG**, BARTLETT, IL (US); **MICHAEL VALENTINO**, GENEVA, IL (US); **EDWARD EATON**, EOLA, IL (US); **ERIC LARSON**, PECATONICA, IL (US); **BRIAN W. MATHEWS**, WATERMAN, IL (US); **KERRY BERLAND**, CHICAGO, IL (US); **DOUGLAS REINKING**, CHICAGO, IL (US)

(73) Assignee: **PRINCE CASTLE, INC**, CAROL STREAM, IL (US)

(21) Appl. No.: **12/618,939**

(22) Filed: **Nov. 16, 2009**

Publication Classification

(51) **Int. Cl.**
H05B 1/00 (2006.01)
F27D 11/00 (2006.01)

(52) **U.S. Cl.** **219/201**; 219/385

(57) **ABSTRACT**

Bezels or escutcheons for a temperature-controlled food holding cabinet are removable and field replaceable by the use of interlocking tabs and detents that hold the escutcheon in place and align the escutcheon to electrical connectors. A tab formed on either the escutcheon or chassis of the cabinet, engages a corresponding detent formed on either the cabinet chassis or the escutcheon. Two tabs and detents are preferably used. One tab engages a corresponding detent with an interference fit.

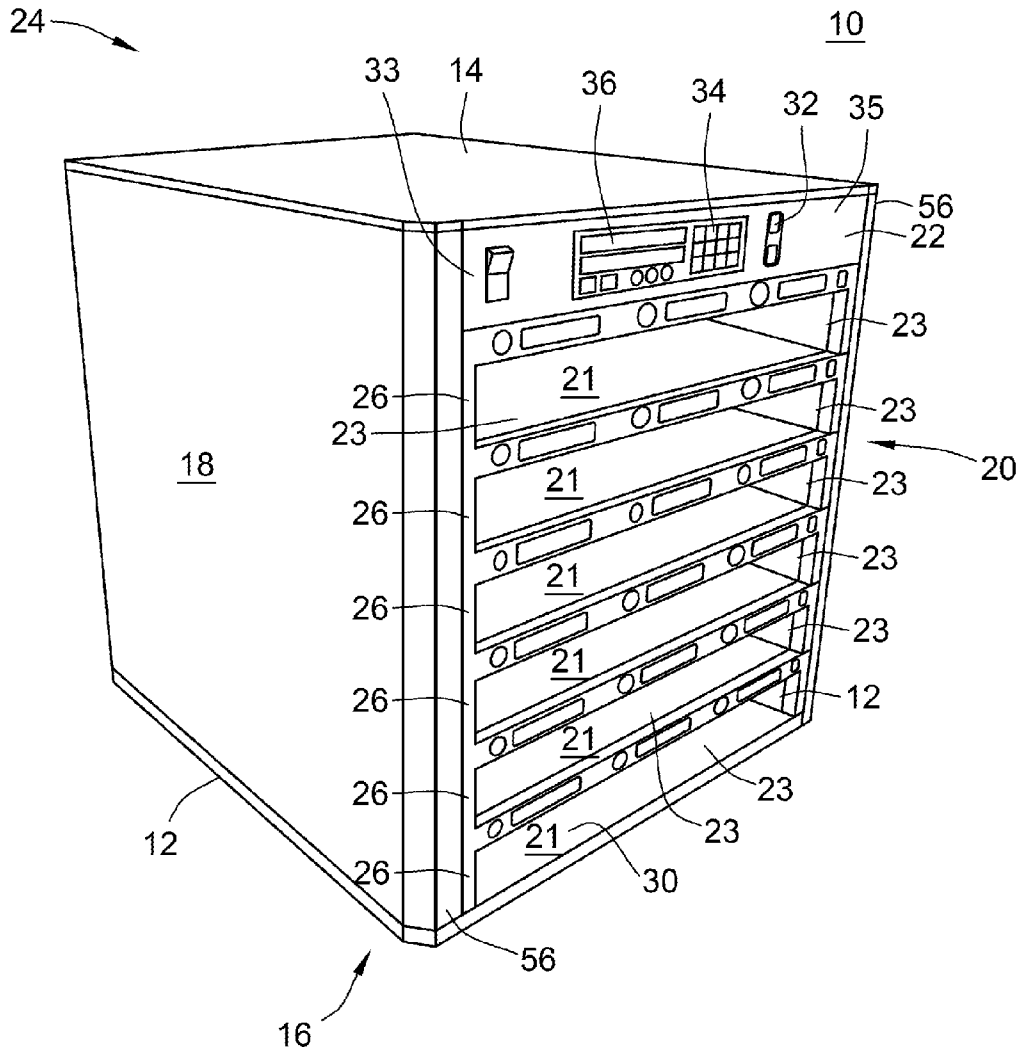

Duke Manufacturing Co. EX1020
U.S. Patent No. 10,852,002

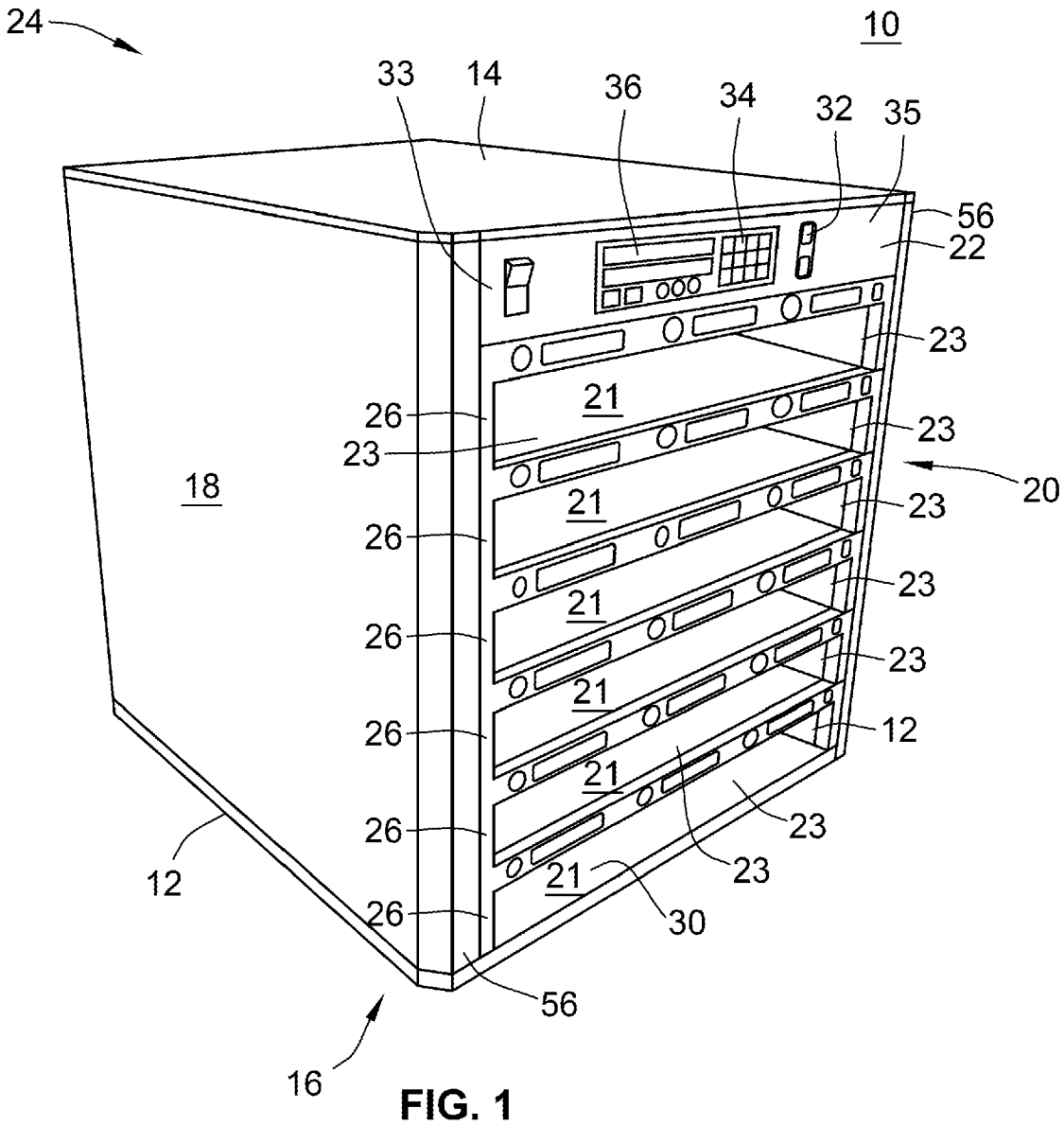
24
10
33
14
36
34
32
35
56
22
23
21
26
23
23
18
20
21
26
23
21
26
23
21
26
23
21
26
12
21
26
23
12
21
23
26
30
56
16

FIG. 1

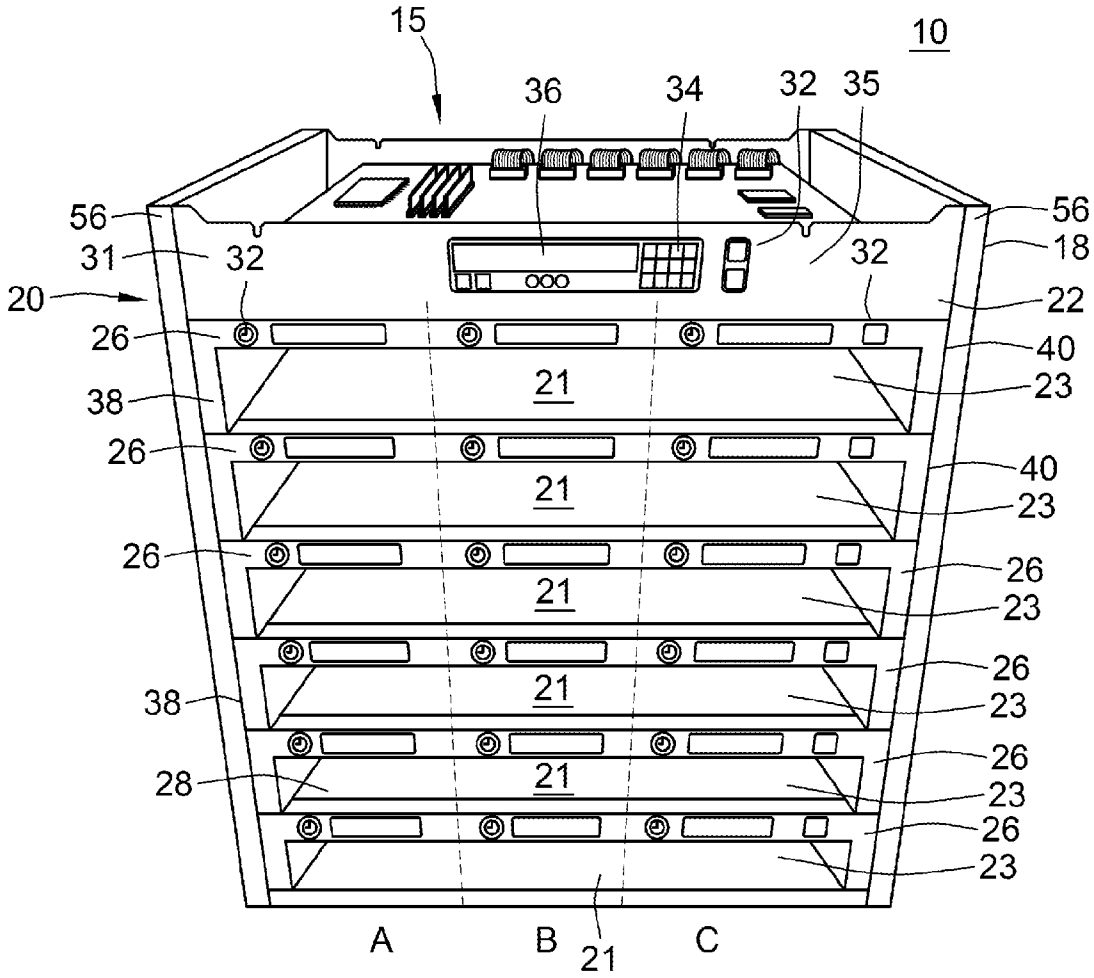
15
10
36
34
32
35
56
31
32
32
56
18
20
22
26
40
21
23
38
26
40
21
23
26
26
21
23
26
21
23
38
26
21
23
28
26
23
A
B
21
C

FIG. 2

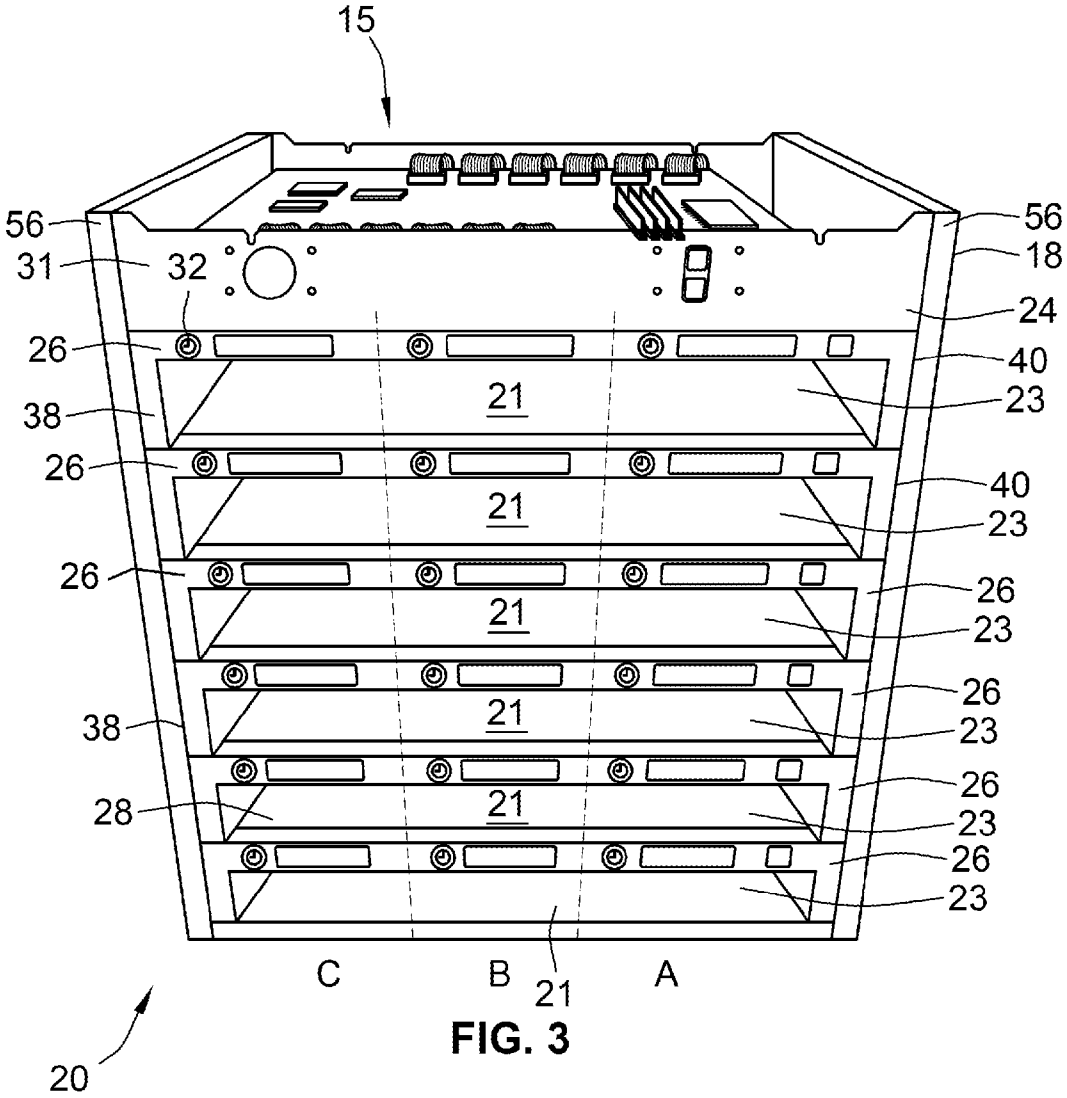
15
56
31
32
26
38
26
26
38
28
56
18
24
40
23
40
23
26
23
26
23
26
23
26
23
21
21
21
21
21
C
B
21
A
20

FIG. 3

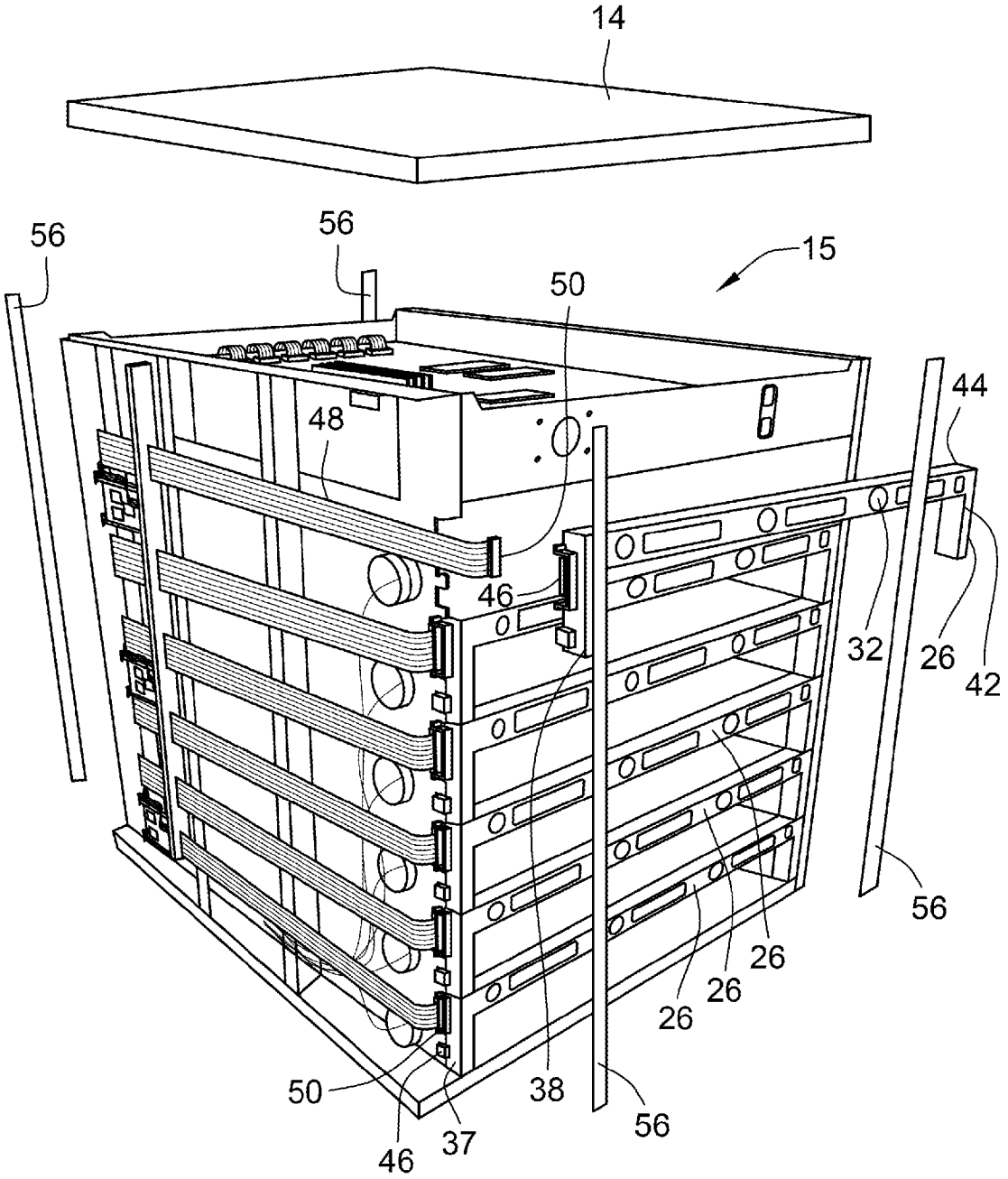

FIG. 4

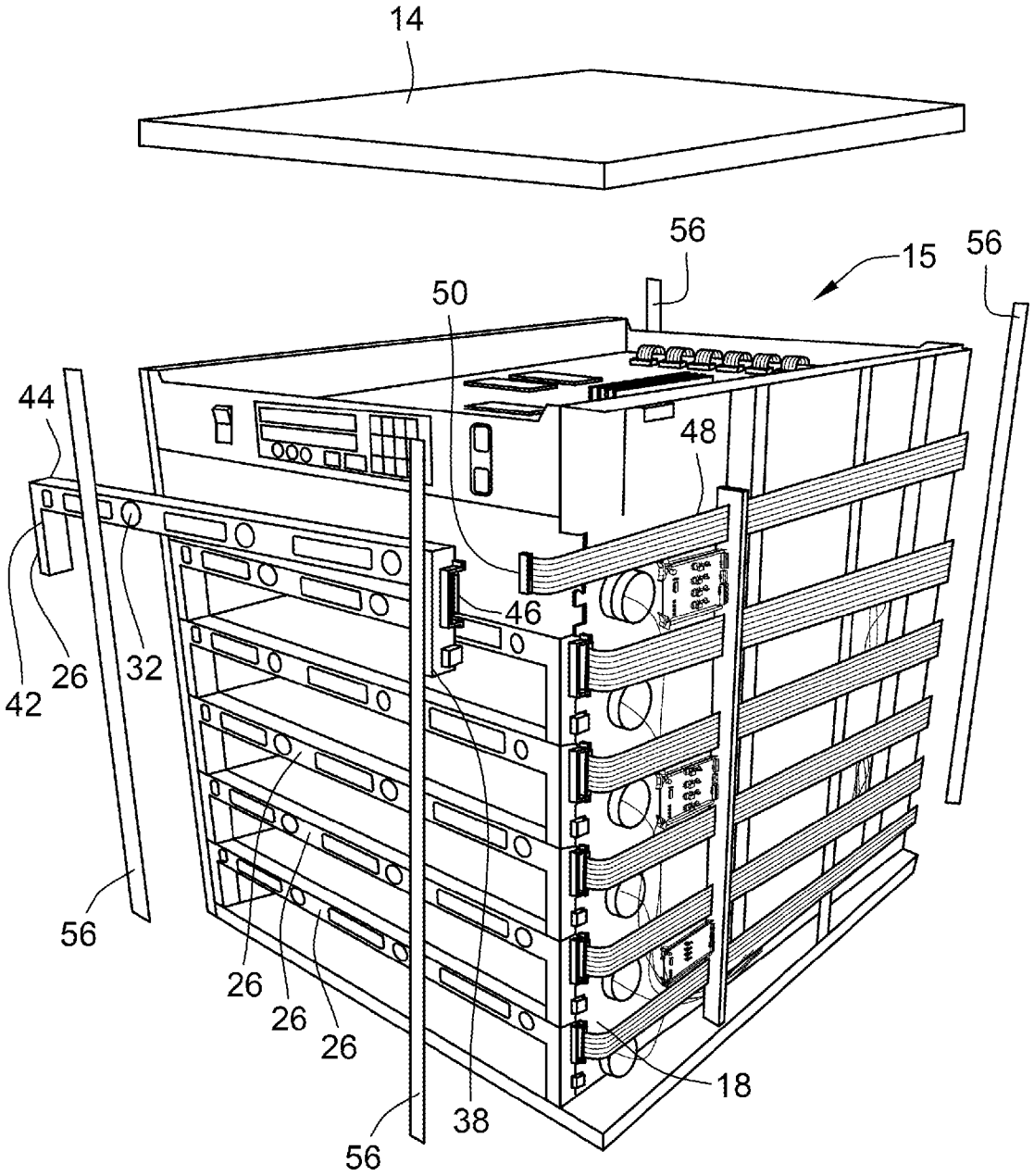

FIG. 5

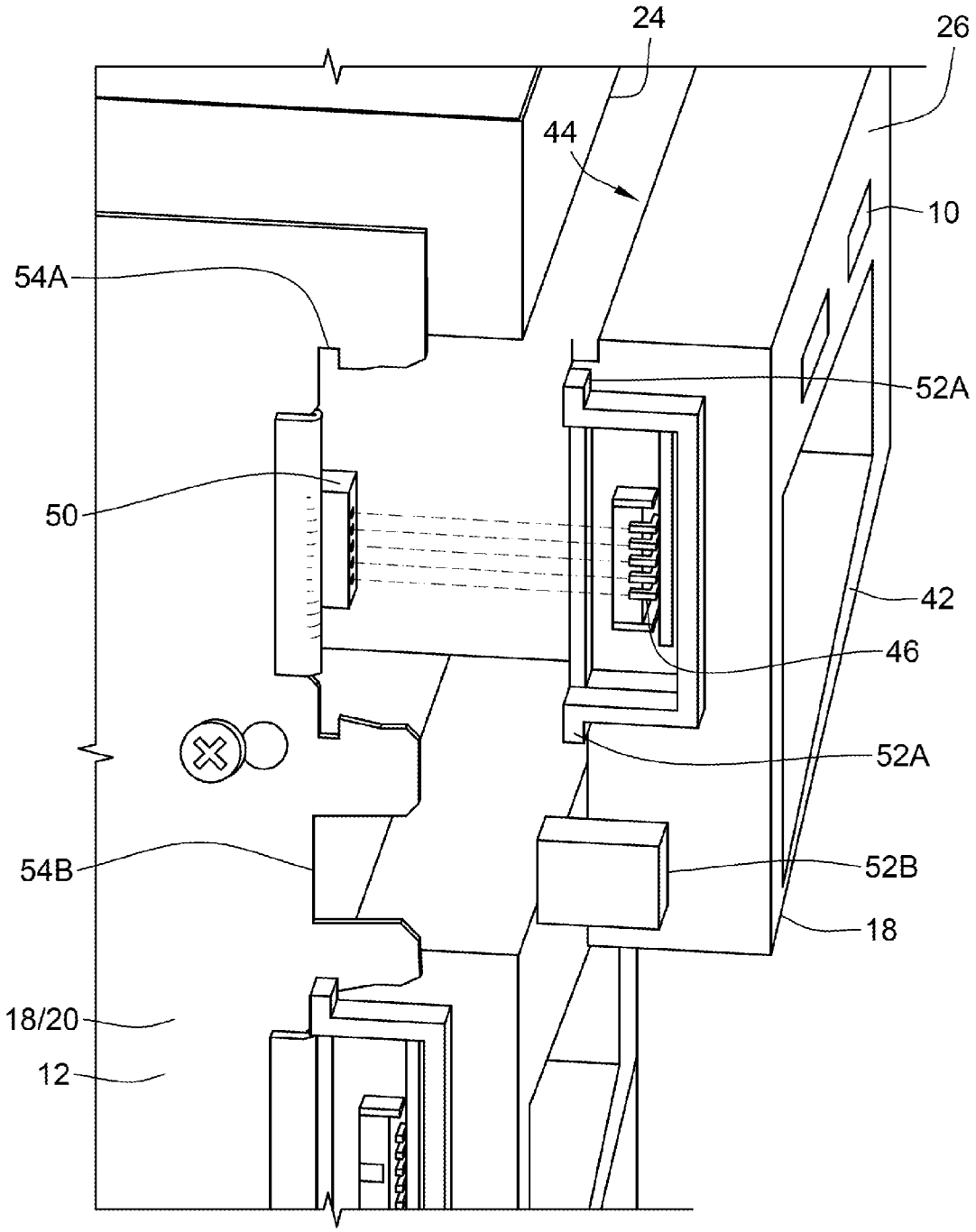

FIG. 6

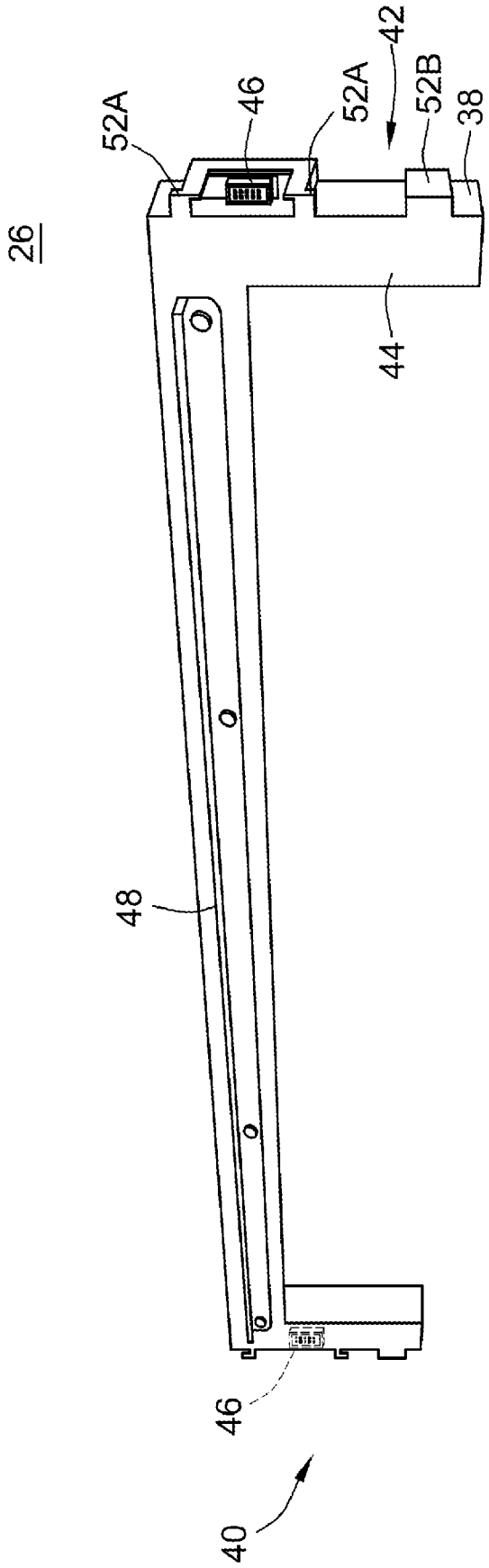

FIG. 7

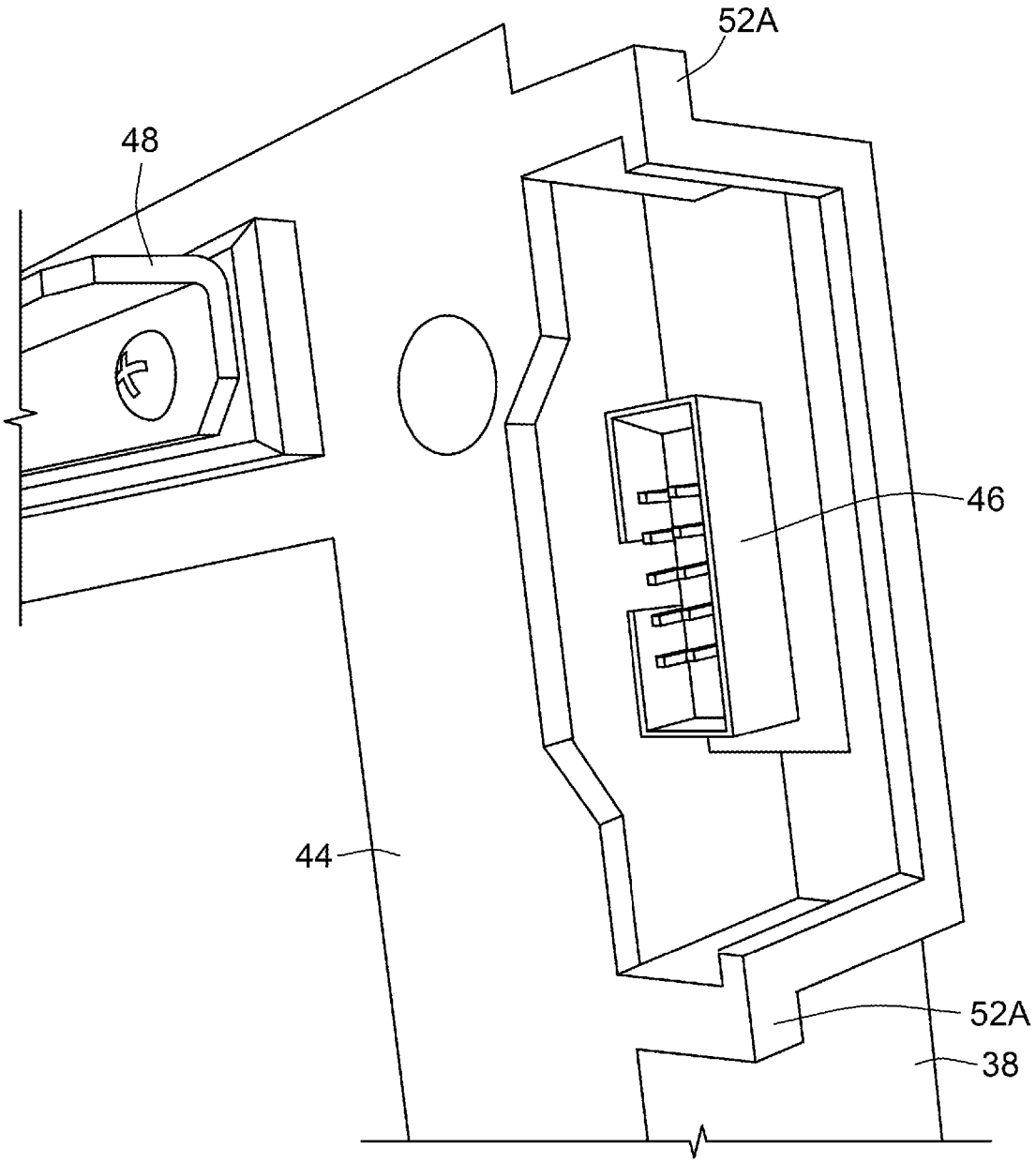

FIG. 8

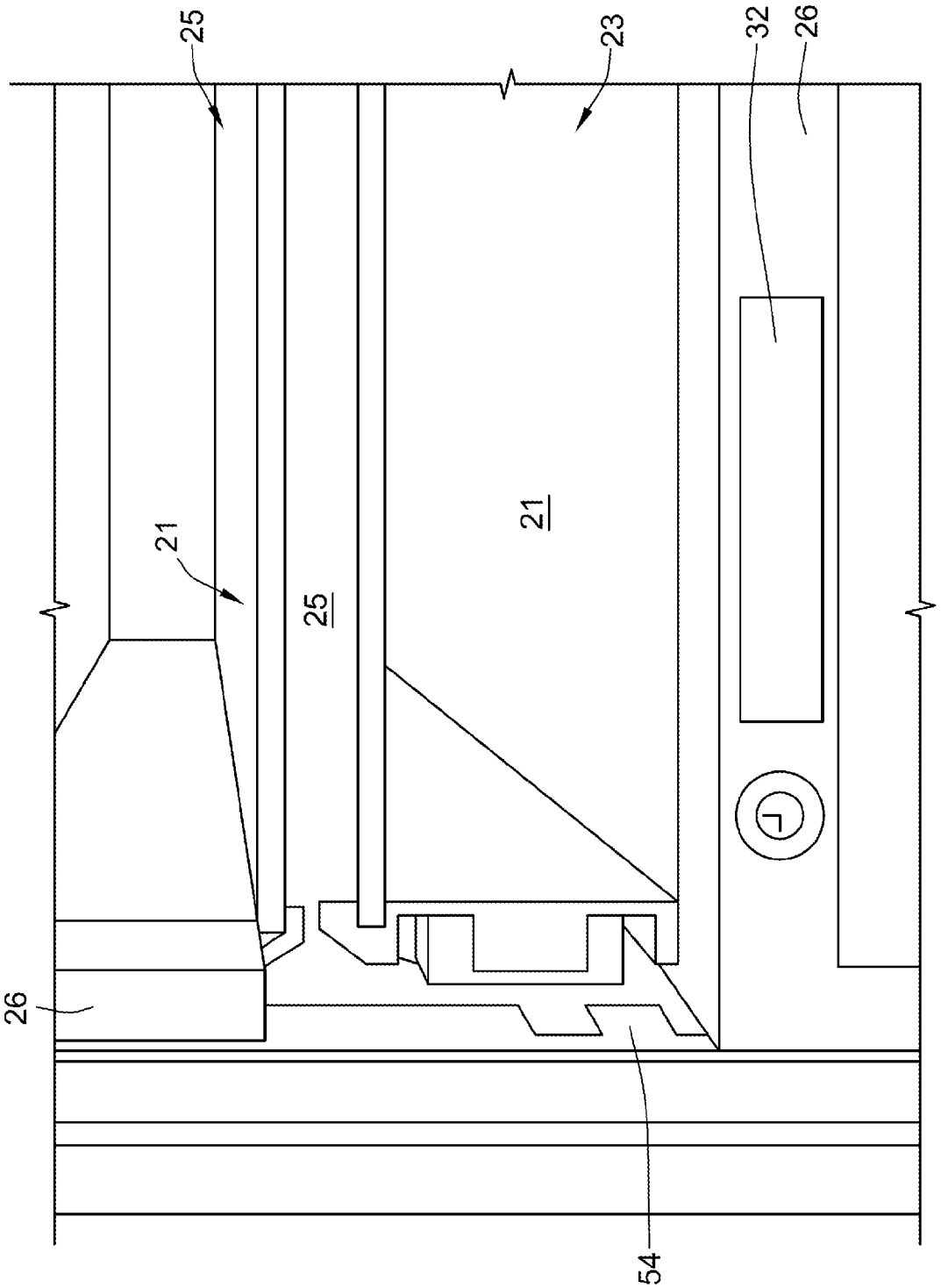

FIG. 9

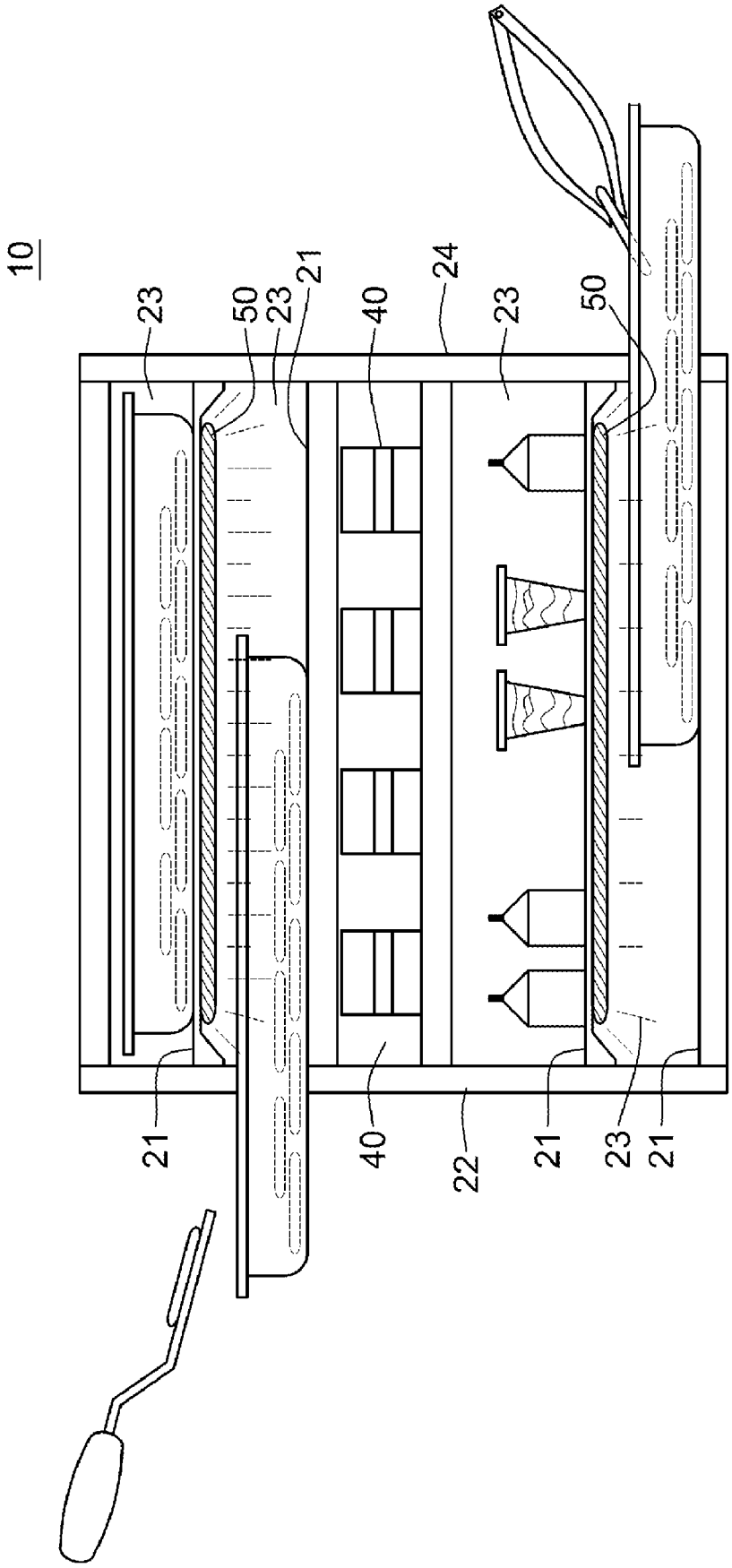

FIG. 10

UNIVERSAL FOOD HOLDING CABINET WITH SNAP-IN ESCUTCHEONS

BACKGROUND

[0001] Many restaurants' success depends on how quickly customers can be served with food items that a customer orders. If the rate at which a restaurant cooks food products equals the rate at which those same food products are being ordered and sold, a fast food restaurant can theoretically have freshly-cooked foods ready to serve for customers as they arrive. Since it is not always possible to match cooked-food production with customer ordering rates, and since fast food restaurant customers expect to receive their ordered food items quickly, many fast food restaurants pre-cook various food items and keep them warm, ready for sale until a customer arrives and purchases a pre-cooked food item.

[0002] Pre-cooked food items cannot be stored for prolonged periods and must be kept warm while they are being held. Prolonged heating causes food texture and flavor to deteriorate. The time that a food product can be kept warm yet remain palatable will vary with each type of food product. It is therefore beneficial to have an ability to store different types of foods at different temperatures and keep track of the time that a food has been kept warm.

[0003] Food holding cabinets are well known in the prior art. A problem with prior art food holding cabinets, as with most commercial restaurant equipment is that they sometimes fail and require a service technician to repair. In keeping with food service operators' goal of reducing cost, it would be desirable to provide on-site service ability to a food holding cabinet whereby repairs can be effectuated by a restaurant operator, on-site and without having to call a service technician.

BRIEF DESCRIPTIONS OF THE DRAWINGS

[0004] Preferred embodiments are set forth in the following detailed description and accompanying in drawings in which like reference numerals represent like parts.

[0005] FIG. **1** is a perspective view of a universal food holding cabinet with snap-in escutcheons;

[0006] FIG. **2** is a front view of the oven depicted in FIG. **1**, with the top panel removed;

[0007] FIG. **3** is a rear view of the oven depicted in FIG. **2**;

[0008] FIG. **4** is a perspective view of the rear of the oven shown in FIG. **3** with the uppermost escutcheon removed from the rear face of the oven, and showing the oven's right-side panel (when viewed from the front) removed to reveal the right side of the oven chassis and attachment points of the escutcheons;

[0009] FIG. **5** is a perspective view of the front of the oven shown in FIG. **3** with the uppermost escutcheon removed from the front face of the oven, and showing the oven's left-side panel removed to reveal the right side of the oven chassis and attachment points of the escutcheons;

[0010] FIG. **6** is a close up view of one side of the chassis (left or right) showing the attachment of a snap-in escutcheon using a detent;

[0011] FIG. **7** is a perspective view of the back or rear side of a snap-in escutcheon shown in FIG. **6**, and showing an electrical connector on one end;

[0012] FIG. **8** is a close-up perspective view of the back side of the snap-in escutcheon shown in FIG. **7** and the electrical connector shown in FIG. **7**;

[0013] FIG. **9** is a close-up view of a left-end of one of the shelves of the holding cabinet shown in FIG. **1**, with one of the escutcheons removed; and

[0014] FIG. **10** is a cross-sectional view of the holding cabinet shown in FIG. **1**.

DETAILED DESCRIPTION

[0015] FIG. **1** is a perspective view of a temperature-controlled food holding cabinet **10**. The holding cabinet **10** is comprised of a metal frame or chassis **12**, best seen in FIG. **4** and FIG. **5**. The chassis **12** is comprised of various stamped and/or rolled metal components that form a substantially cube-shaped oven-like cabinet subdivided into several separate, temperature-controlled food-holding compartments **23**. Depending on the placement of heating and cooling elements as described more fully below, each shelf **21** is capable of maintaining one or more different temperatures for different types of food items.

[0016] As can be seen in FIG. **1**, the cabinet **10** is comprised of a top panel **14**, a bottom panel **16**, a left-side panel **18**, a right-side panel **20**, a front face **22** and a rear face **24** not visible in FIG. **1**. The top panel **14** covers electronic components, which include a master controller computer, cables and connectors that provide various connections between a front panel user interface and the master controller. A top panel **31** of the front face **22** provides several user interfaces by which a cabinet operator can configure the cabinet but also quickly determine its status by visually reading corresponding user interfaces. As can be seen in FIGS. **4** and **5**, the side panels **18** and **20** also cover various electronic circuits and associated wiring.

[0017] The front face **22** and the rear face **24**, are provided with snap-into-place bezels, which are also referred to herein as snap-in escutcheons or simply escutcheons, and which are identified in the figures by reference numeral **26**. As described more fully below, the escutcheons **26** cover the edges **25** of the shelves **21**. They also define openings into food storage compartments **23**. And, the escutcheons **26** provide user interface devices, which include display devices and user-actuated control devices, the function and operation of which is described more fully below.

[0018] Importantly, the escutcheons **26** are used on both the front and rear faces of the cabinet **10** and are interchangeable. The escutcheons **26** are configured to have electrically parallel electrical connectors **46** at each end of the escutcheon **26**, which mate with chassis-located connectors **50** described more fully below but preferably located to one side of each cabinet face.

[0019] FIG. **2** is a front view of the cabinet **10** with the top panel **14** removed to reveal cabinet electronics equipment in the cabinet's electronics compartment **15**, which is covered and protected by the top panel **14**. The electronic equipment in the electronics compartment **15** includes at least one "master" computer/controller **70** for other electronics in the cabinet **10**.

[0020] Below the electronics compartment **15** are several horizontal and substantially planar, thermally-conductive shelves **21**. The shelves **21** are vertically separated from each other in the chassis **12** and fixed between the left side panel **18** and right side panel **20** to define food-holding compartments **23**. The vertical separation distance between each shelf **21** defines the height of each compartment **23** and thus the maximum height of a food item or the packaging for a food item.

[0021] The shelves **21** and thus the compartments **23** are considered to extend horizontally across most of the width of the cabinet **10**. The shelves **21** are preferably made from thermally conductive materials such as aluminum, copper or steel, so that the temperature of the food holding compartments **23** can be maintained by the transfer of heat from the shelf **21** into the compartment **23**, or from the compartment **23** into the shelf **21**. Different types of temperature control elements **50** are embedded into each shelf or otherwise thermally coupled thereto. Compartment temperature can thus be achieved by controlling the temperature of the temperature control elements **50**, which in turn controls the temperature of the thermally conductive shelves **21**, which define the compartments **23**.

[0022] In a preferred embodiment, the shelves **21** of the cabinet **10** are subdivided horizontally into separate, temperature-controlled zones. The different zones for each shelf are identified in FIGS. **2** and **3** by the letters A, B and C. When the cabinet **10** is viewed from the front, as shown in FIG. **2**, the "A" zone of each shelf is at the left-hand side of the cabinet **10**; the "C" zone is locate on the right-hand side of the cabinet **10**; the "B" zone is located between the A and C zones. Temperature control of the separate zones A, B and C is accomplished by using separate temperature control elements in each zone, and which are thermally coupled preferentially to one zone over the others. By way of example, zone A in a first shelf has a heater embedded in the shelf and centered in the "A" zone. It therefore provides most of its heat output into the A zone.

[0023] A heater embedded in the shelf **21** and centered in the "A" zone is separately controlled from heaters that are embedded in the same shelf **21** and centered in zones B and C and vice versa. In an alternate embodiment, zones A, B and C and corresponding embedded heaters are thermally isolated from each other using a thermal break, such as those disclosed in co-pending application Ser. No. 12/267,449 entitled, BIFURCATED HEATED TOASTER PLATEN, which is assigned to the assignee of this application. The contents of co-pending application Ser. No. 12/267,449 are incorporated herein by reference, at least with regard to heated platens and the thermal breaks disclosed therein. In yet another embodiment, the zones are isolated from each other by walls **74**, which extend between the top and bottom of the compartments **23**, i.e., vertically-adjacent shelves **21** that define a compartment **23** between them.

[0024] As can be seen in FIG. **9**, the escutcheons **26** cover the horizontal edges **25** of the thermally-conductive shelves **21** and are formed to extend downwardly from the shelf **21** above a compartment **23** to the shelf **21** that defines the bottom of the same compartment **23**. The escutcheons **26** as such thus have the shape of an inverted letter U or the symbol, n. The escutcheons **26** are therefore referred to interchangeably hereinafter as being either "U-shaped" or "inverted-U-shaped."

[0025] Since the escutcheon assemblies **26** abut thermally-conductive shelves **21** that can be hot to the touch, the escutcheons **26** are preferably formed from a high-temperature, heat and electricity-insulating, injection-molded plastic in order to protect operators from contacting hot and cold surfaces. The escutcheons **26** can also be formed of fiberglass, carbon fiber or other suitable thermally-insulating material.

[0026] As shown in FIGS. **1-5**, the escutcheons **26** extend almost completely across the width of the cabinet **10**. Downward-extending or "vertical" sections at each end of the escutcheons **26** abut chassis end caps **56**. The end caps **56** are attached to the front and rear faces of the cabinet **10** to fix the escutcheons **26** in place in order to prevent them from being inadvertently or accidentally removed from the chassis **12**. The end caps **56** also cover and protect mating connectors in the escutcheons **26** and attached to the chassis **12**.

[0027] FIG. **3** is a rear view of the cabinet **10** shown in FIGS. **1** and **2**; FIG. **10** is a cross-sectional view. As can be seen in FIGS. **1-3** and FIG. **10**, the shelves **21** extend from the front face **22** of the cabinet **10** to the rear face **24**. A food item can thus be inserted into a compartment **23** through an opening at the rear face **24** and removed through an opening at the front face **22** or vice versa.

[0028] A rectangular-shaped opening in either the front or rear of the cabinet **10** is defined by the attachment of two escutcheons **26** to vertically adjacent shelves **21**. In other words, when a first escutcheon **26** is attached to either a front or rear cabinet face to cover the edge **25** of a first shelf **21**, the first escutcheon **21** and a second attached to the same cabinet face to cover the edge **25** of a second shelf **21** above or below the first shelf **21**, together define a rectangular-shaped "opening" in the corresponding cabinet face. In the figures, the rectangular-shaped "openings" formed by adjacent escutcheons **26** on the front face **22** of the cabinet **10** are identified by reference numeral **28**. The "openings" on the rear face **24** are identified by reference numeral **30**. The openings thus provide rectangular-shaped openings into the temperature-controlled food-holding compartment **23** where the temperature of food items can be maintained under they are served or discarded.

[0029] In addition to covering the edges **25** of the shelves **21** and defining openings **28** and **30** into the compartments **23**, the escutcheons **26** also provide one or more user interface devices, which convey information about conditions inside the compartment, a food item inside the compartment and/or allow the input of user commands to be given to computers for a compartment. Since the escutcheons **26** are field removable and replaceable yet provide electrically-operated user interfaces as described above, the escutcheons require electrical connections that are readily "made" when an escutcheon **26** is attached to the chassis yet "opened" when an escutcheon is removed. Stated another way, electrical connectors are provided to the escutcheon **26**, which engage and disengage corresponding, mating connectors in the chassis **12**.

[0030] Escutcheon-located user interfaces are embodied as incandescent indicator bulbs or light-emitting diodes (LEDs) **32**, various types of switches **33**, liquid crystal display (LCD) panels **36**, "electronic-paper" or "e-panels, various types of key pads **34** as well biometric sensors. Such devices are well-known to those of ordinary skill in the electronic arts.

[0031] Incandescent bulbs and individual LEDS can provide on/off status indicators. Seven-segment LEDs can also be configured to display alphanumeric information. LED display panels can display text and/or graphics. Electronic paper can also be used to provide text and/or graphics.

[0032] Switches used in the escutcheons **26** include toggle, push-buttons and/or rocker switches, whether illuminated or not. Keypads are also used and can be either mechanically actuated switches, capacitance-sensitive or thermally-actuated. Biometric sensors used in the escutcheons **26** include finger print readers, such as those commonly used in many personal computers.

[0033] Electronic paper, which is also known as e-paper or electronic ink, is a well known display technology that mim-

ics the appearance of ordinary ink on paper. Unlike a conventional flat panel LCD display, which uses either a backlight or incident room light, electronic paper or e-paper reflects light like ordinary paper. It is also capable of holding text and images indefinitely without drawing electricity, while allowing the image to be changed later. The user interfaces in the escutcheons **26** an operator to configure a compartment, e.g., set a desired temperature, a food holding time etc., as well as visually determine its status.

[0034] In the preferred cabinet embodiment, wherein shelves **21** have separate temperature zones, the escutcheons **26** are configured to provide a user interface for zone A, B and C of a corresponding shelf. In FIG. **2** and FIG. **3**, each escutcheon **26** has an actuator switch **32**A and a display **32**B for each of the three zones A, B and C. The information displayed on a particular display **32**B corresponds to the zone immediately below the display **32**A.

[0035] Each escutcheon **26** has a left end **38** and a right end **40**. As can be seen in FIGS. **4-7**, each escutcheon **26** also has a front side **42** and a rear side **44**.

[0036] In a preferred embodiment of the cabinet **10**, an escutcheon **26** can be used on either the front face **22** of the cabinet **10** or the rear face **24** of the cabinet **10**. In other words, an escutcheon **26** can be removed from the rear face **24** and installed at the front face **22**. In the same preferred embodiment of the cabinet **10**, the electronic devices of the cabinet **10**, which interface with user interfaces in the escutcheons **26**, are located on only one side of the cabinet, i.e., the right side **20** of the cabinet, when the cabinet **10** is viewed from the front face **22**. In order to make the same escutcheon **26** usable on both front and rear faces of the preferred embodiment of the cabinet **10**, which has connectors for the escutcheon on only one side of the cabinet, both the left and rear ends of the escutcheon assembly **26** are provided the multi-conductor electrical connector(s) **46**.

[0037] When an escutcheon **26** is installed on the rear face **24** of the cabinet **10** as described below, an electrical connector **46** on the left end **38** of the escutcheon **26** mates electrically and mechanically with a connector **50** located on the left side of the rear face **24** of the cabinet, which corresponds to the right side **20** of the cabinet **10** when the cabinet is viewed from the front. When the same escutcheon **26** is installed on the front face **22** of the cabinet **10**, a connector **46** on the right end **40** of the escutcheon **26** mates electrically and mechanically with a connector **50** at the right side **20** of the front face **22** of the cabinet. Stated another way, both ends of the escutcheon are provided with the same connector **46**.

[0038] In an alternate and equivalent embodiment, the cabinet **10** is configured to have a connector **50** at diagonally opposite corners. In such an embodiment, the escutcheon has a connector **46** at one of the left and right ends that mates with a corresponding connector **50** attached to the chassis at diagonally opposite corners.

[0039] As can be seen in FIG. **2**, information displayed on the front face **22** of the cabinet **10** for zone A of a particular shelf **21**, will be displayed on the left-most display panel **32**A, when the cabinet **10** is viewed from the front. And, as can be seen in FIG. **3**, information displayed on the rear face **24** of the cabinet **10** for the same zone of the same shelf **21** will be displayed on the right-most panel **32**A, when the cabinet is viewed from the rear.

[0040] Whether the cabinet **10** is configured with the connectors **50** on the same, one side or at diagonally opposite corners, the user interfaces **32**A and **32**B on an escutcheon **26** are associated with the same zone of the same shelf **21**, regardless of whether the escutcheon **26** is attached to the front face **22** or rear face **24** of the cabinet **10**. In other words, when an escutcheon **26** is attached to the rear face **24**, the user interface on the right-hand side of the escutcheon **26** pertains to the right-hand side of the corresponding shelf; the user interface on the left-hand side of the same escutcheon pertains to the left-hand side of the corresponding shelf. When the same escutcheon **26** is attached to the front face **22**, the user interface on the right-hand side of the escutcheon **26** pertains to the right-hand side of the corresponding shelf the user interface on the left-hand side of the same escutcheon pertains to the left-hand side of the corresponding shelf.

[0041] As can be seen in FIGS. **4** and **5**, multi-conductor ribbon cables or wires **48** along the "right" side **20** carry electrical signals between the various escutcheon-located user interfaces and one or more controllers located on the same side of the chassis **12**. In FIG. **4**, the electrical connector **46** attached to the left end a rear side **44** of the escutcheon **26** makes an electrical connection with the mating connector **50** attached to the chassis **12** when the escutcheon **26** is attached to the chassis **12**.

[0042] FIGS. **6**, **7** and **8** reveal structures by which the escutcheons **26** are snapped into place on both the front and rear faces of the chassis **12**. The escutcheons are attached to the chassis **12** by way of a mechanical and frictional engagement of a protuberance or tab **52** formed as part of the left **38** and right **40** ends of the escutcheon **26** with correspondingly mating slots or detents formed in the left **18** and right sides **20** of the chassis **12**. In an alternate embodiment, a single tab (not shown) and corresponding detent (not shown) can be used at a single end of the escutcheon and chassis, or in the middle of the escutcheon and a corresponding face of the chassis.

[0043] In FIG. **6**, which is an enlarged view of one side of the chassis **12** and one end of an escutcheon, a tab **52**A on the end of the escutcheon **26** engages a corresponding detent **54**A when the escutcheon **26** is aligned with and pushed against the rear face **24** of the chassis **12**. In a preferred embodiment, the tabs **52**A are sized, shaped and arranged to be just slightly larger than the corresponding detents **54**A. Since the escutcheon **26** is plastic, the slightly-larger tabs **52**A slightly compress and engage the corresponding detents **54**A with an interference fit. The tabs **52**A, and hence the escutcheon **26**, thus snaps-into the detents **54**A, holding the escutcheon **26** in place against the chassis and in electrical connection with the cabinet electronics. Tabs **52**A are on each end of the escutcheon and engage corresponding detents on each side **18** and **20** of the chassis.

[0044] In FIG. **6**, a second detent **52**B is formed into the side of the chassis. The second detent **52**B is deeper (projects into the cabinet sidewall) than the snap-in detent **54**A.

[0045] A second tab **52**B is also formed into the ends of the escutcheon. The second tab **52**B is much longer (or wider) than the snap-in detents **52**A. Imbuing the larger tab **52**B and detent **54**B with a clearance fit enables them to align the connectors **46** and **50** and align the snap-in tab **52**A with the corresponding detent **54**A.

[0046] FIG. **7** shows the back or rear side **44** of the preferred embodiment of the escutcheon **26**. This figure also shows the inverted U-shape of the escutcheon **26**, the left-end **38** connector **46**, the right end **40** connector **46**, and tabs **52**A and **52**B. FIG. **7** also shows a stiffener bracket **48** attached to the

rear side **44** by screws, used in one embodiment to strengthen the escutcheon during installation and removal from the detents.

[0047] As can be seen in the figures, the escutcheons **26** extend substantially all the way across both the front face and the rear face of the chassis **12**. At both sides of the chassis, the tabs, detents and electrical connectors are concealed from view and protected from being disengaged by elongated U-shaped end caps **56** that extend vertically along both sides **18** and **20** of the cabinet **10**. The end caps **56** are fastened to the chassis **12** at the left and right sides preferably using screws to hold them in place. Alternate embodiments fasten the caps **56** into place using magnets or Velcro™ fasteners.

[0048] As mentioned above, the electrical connection provided by the connectors **46** and **50** carry electrical signals between user interface devices in the escutcheons and one or more cabinet-located controllers. The escutcheon-located user interface devices described above are therefore considered to form part of the escutcheons **26**. In one embodiment, the user interface display devices display information that can include either a desired temperature of a compartment **23** or an actual temperature of the compartment, the time that a food item has been inside a compartment and/or the time that a food item should remain in a compartment, the identity of a food item in the compartment, or the identification of a person for whom a food product inside the compartment was made and is being stored.

[0049] The most common use for the food holding cabinet shown in the figures is as a heated cabinet wherein each of the compartments **23** maintains a separate temperature, elevated relative to room temperature, by way of electric heating elements formed in, attached above or mounted below the compartment shelves **21**.

[0050] FIG. **10** shows a cross sectional view of the cabinet **10**, which provides heated compartments. As shown, food items can be placed in, and removed from, either the front face **22** or the rear face **24**. FIG. **10** also shows that the escutcheons on the front face have a corresponding escutcheon on the opposite face. Each escutcheon is therefore considered to have an opposing escutcheon on the opposite side.

[0051] Heat can be provided to the compartments **23** using electrically resistive heating elements **50** thermally coupled to a shelf **21**.

[0052] The foregoing description is for purposes of illustration only. Those of ordinary skill in the art will recognize that while the tabs **52** depicted in the figures are on the escutcheon **26** and the detents **54** are shown formed in the chassis sides, an alternate and equivalent embodiment reverses the location of the tabs and detents such that the tabs are formed into the chassis sides and detents are formed into the escutcheons. The true scope of the invention is set forth by the appurtenant claims.

What is claimed is:

1. A temperature-controlled food holding cabinet (food holding cabinet) comprised of:

a chassis having first and second sides and front and rear sides, at least one of the front and rear sides having an opening to insert a food product into the food holding cabinet;

an escutcheon attached to the chassis and extending at least part way across one of the front and rear sides, the escutcheon having first and second opposing ends and attached to the chassis by the engagement of a tab with a detent.

2. The food holding cabinet of claim **1**, wherein the tab is a protuberance extending from the escutcheon and the chassis is comprised of a detent, the detent being sized, shaped and arranged to receive the tab.

3. The food holding cabinet of claim **2**, wherein the tab is proximate the first end of the escutcheon and wherein the detent is formed into a part of the chassis corresponding to the first side of the chassis.

4. The food holding cabinet of claim **2**, wherein the chassis is formed to include the tab and wherein the escutcheon is formed to include the detent, the detent in the escutcheon being sized shaped and arranged to receive the tab.

5. The food holding cabinet of claim **1**, wherein the escutcheon is further comprised of a user interface device and a first electrical connector, and wherein the chassis is further comprised of a second electrical connector, the first electrical connector engaging the second electrical connector when the tab engages the detent, the first and second electrical connectors providing an electrical signal pathway between the user interface device and a computer in the food holding cabinet.

6. The food holding cabinet of claim **1**, wherein the chassis has a first width substantially equal to the distance between the first and second sides and wherein the escutcheon has a second width less than the first width, the escutcheon being configured to extend horizontally across the front side, proximate the opening.

7. The food holding cabinet of claim **1**, wherein the tab and detent are sized, shaped and arranged to engage each other with an interference fit.

8. The food holding cabinet of claim **1**, wherein the tab and detent are sized, shaped and arranged to engage each other with a clearance fit.

9. The food holding cabinet of claim **1**, wherein the tab and detent are sized, shaped and arranged to engage each other with a transition fit.

10. The food holding cabinet of claim **1** further comprised of an elongated end cap along one side of the cabinet, the elongated end cap being configured to cover the tab and detent and fix the escutcheon in place.

11. The food holding cabinet of claim **1**, wherein the chassis is comprised of at least one temperature-controlled compartment, and wherein the escutcheon is comprised of a user interface device to display at least one of:

a desired temperature of the at least one compartment;

an actual temperature of the at least one compartment;

an amount of time that a food item has been inside the at least one compartment;

an amount of time that a food item inside a compartment, should remain inside the compartment;

the identity of a food item inside the at least one compartment; and

identification of a person for whom a food product inside the at least one compartment, was made.

12. The food holding cabinet of claim **11**, wherein the temperature controlled compartment is comprised of a shelf, said shelf being subdivided into at least first and second temperature controlled zones.

13. The food holding cabinet of claim **12**, wherein the first and second temperatures controlled zones are separated by a thermal break.

14. The food holding cabinet of claim **11**, wherein the user interface device is comprised of at least one of:

a keypad;

a switch;

a liquid crystal display;

at least one light emitting diode;

E-paper; and

a biometric sensor.

15. The food holding cabinet of claim **11**, wherein the at least one temperature-controlled compartment is a heated compartment.

16. A temperature-controlled food holding cabinet (food holding cabinet) comprised of:

a chassis having first and second sides and front and rear sides, the front and rear sides having an opening to insert a food product into the food holding cabinet;

a first escutcheon attached to the front side of the chassis and extending at least part way across the front side, the first escutcheon having first and second opposing ends and attached to the chassis front side by the engagement of a first tab with a first detent; and

a second escutcheon attached to the rear side of the chassis, opposite the first escutcheon and extending at least part way across the rear side, the second escutcheon having first and second opposing ends and attached to the chassis rear side by the engagement of a second tab with a second detent.

17. The food holding cabinet of claim **16**, wherein the first and second tabs are protuberances extending from corresponding first and second escutcheons, wherein the chassis front side is comprised of a first detent and wherein the chassis rear side is comprised of a second detent, the first and second detents being sized, shaped and arranged to receive the corresponding first and second tabs.

18. The food holding cabinet of claim **16**,

wherein the first escutcheon is further comprised of a first electrical connector and, the front side of the chassis is further comprised of a second electrical connector, the first electrical connector engaging the second electrical connector when the first tab engages the first detent, the first and second electrical connectors providing an electrical signal pathway between a user interface device attached to the first escutcheon and a computer in the chassis; and

wherein the second escutcheon is further comprised of a third electrical connector and the chassis rear side is further comprised of a fourth electrical connector, the third electrical connector engaging the fourth electrical connector when the second tab in the second escutcheon engages the second detent, the third and fourth electrical connectors providing an electrical signal pathway between a user interface device attached to the second escutcheon and a computer in the chassis.

19. The food holding cabinet of claim **16**, wherein the first and second escutcheons are interchangeable and usable on the front and rear sides.

20. The food holding cabinet of claim **16**, wherein the chassis has a first width substantially equal to the distance between the first and second sides and wherein the first and second escutcheons have a second width less than the first width, the first and second escutcheons being configured to extend horizontally across the front and rear side, proximate the opening in the front and rear sides.

21. The food holding cabinet of claim **16**, wherein the tabs and detents are sized, shaped and arranged to engage each other with an interference fit.

22. The food holding cabinet of claim **16**, wherein the tabs and detents are sized, shaped and arranged to engage each other with a clearance fit.

23. The food holding cabinet of claim **16**, wherein the tabs and detents are sized, shaped and arranged to engage each other with a transition fit.

24. The food holding cabinet of claim **16** further comprised of elongated caps configured to cover the tabs and detents.

25. The food holding cabinet of claim **16**, wherein the user interface device is comprised of at least one of:

a keypad;

a switch;

a liquid crystal display;

at least one light emitting diode; and

E-paper.

26. The food holding cabinet of claim **16**, wherein the chassis is comprised of at least one temperature-controlled compartment, and wherein at least one of the first and second escutcheons is comprised of a user interface device configured to display at least one of:

a desired temperature of the at least one compartment;

an actual temperature of the at least one compartment;

an amount of time that a food item has been inside the at least one compartment;

an amount of time that a food item inside a compartment, should remain inside the compartment;

the identity of a food item inside the at least one compartment; and

identification of a person for whom a food product inside the at least one compartment, was made.

27. The food holding cabinet of claim **16**, wherein the at least one temperature-controlled compartment is a heated compartment.

28. A temperature controlled food holding cabinet comprised of:

a chassis having a top, a bottom, first and second sides and front and rear faces;

a plurality of temperature-controlled food holding compartments (compartments) within the chassis, each compartment having an opening through one of the front and rear faces and configured to receive a food product through the opening, the compartments being configured to maintain a temperature of the food product;

at least one user interface escutcheon attached to the chassis and extending at least part way across one of the front and rear faces, the escutcheon having first and second opposing ends and configured to be attached to the chassis by the engagement of a tab with a corresponding detent.

29. The food holding cabinet of claim **28**, wherein the escutcheon is comprised of the tab and wherein the chassis is comprised of the detent.

30. The food holding cabinet of claim **28**, wherein the chassis is comprised of the tab and wherein the escutcheon is comprised of the detent.

31. The food holding cabinet of claim **28**, wherein the escutcheon is comprised of at least one of:

plastic, fiberglass and carbon fiber.

32. The food holding cabinet of claim **28**, wherein the escutcheon is further comprised of a first electrical connector and the chassis is comprised of a second electrical connector, the first electrical connector engaging the second electrical connector when the tab engages the detent, the first and second electrical connectors providing an electrical signal path-

way between a display device attached to the escutcheon and a computer attached to the chassis.

33. The food holding cabinet of claim **28**, further comprised of a user interface device comprised of at least one of:

a keypad;

a push-button switch;

a liquid crystal display;

a light emitting diode;

E-paper;

a light bulb; and

a biometric sensor.

34. The food holding cabinet of claim **28**, wherein the escutcheon is comprised of a user interface device configured to indicate at least one of:

a desired temperature inside the compartment;

an actual temperature inside a compartment;

an identity of a food product inside a compartment;

a length of time that a food product has been inside a compartment;

a length of time that a food product inside a compartment should remain inside the compartment; and

an identifier of a person for whom a food product was placed into the food holding cabinet.

35. The food holding cabinet of claim **28**, wherein the tab and detent are sized, shaped and arranged to engage each other with an interference fit.

36. The food holding cabinet of claim **28**, wherein the tab and detent are sized, shaped and arranged to engage each other with a clearance fit.

37. The food holding cabinet of claim **28**, wherein the tab and detent are sized, shaped and arranged to engage each other with a transition fit.

38. The food holding cabinet of claim **28**, further comprised of first and second end caps configured to cover the first and second ends of the user interface escutcheon and to cover the tab and detent.

* * * * *