US 20110114624A1

(19) United States

(12) Patent Application Publication

Chung et al.

(10) Pub. No.: US 2011/0114624 A1

(43) Pub. Date: May 19, 2011

(54) **FOOD HOLDING CABINET POWER SUPPLIES WITH DOWNLOADABLE SOFTWARE**

(75) Inventors: **Terry Tae-IL Chung**, Bartlett, IL (US); **Michael Valentino**, Geneva, IL (US); **Jeff Schroeder**, Lake Zurich, IL (US); **Mark Kmiecik**, Chicago, IL (US); **David Reid**, Palatine, IL (US); **Paul Berland**, Elgin, IL (US); **Kerry Berland**, Chicago, IL (US); **Douglas Reinking**, Chicago, IL (US)

(73) Assignee: **PRINCE CASTLE, INC**, CAROL STREAM, IL (US)

(21) Appl. No.: **12/618,957**

(22) Filed: **Nov. 16, 2009**

Publication Classification

(51) **Int. Cl.**
F27D 11/00 (2006.01)
H05B 1/00 (2006.01)

(52) **U.S. Cl.** **219/385**; 219/482

(57) **ABSTRACT**

A universal food holding cabinet has multiple compartments, the temperatures of which are under software control by microprocessors or microcontrollers located on power supply circuit boards for corresponding compartments. Each compartment can have different temperature control requirements with different requirements being met by different programs in different processors, or different operating parameters for the same program. The cabinet is configured to prevent the power supply boards from being installed incorrectly, to provide an address to a power supply circuit board when it is installed and by which a power supply circuit can be addressed by a master controller to receive downloads of executable instructions and/or data.

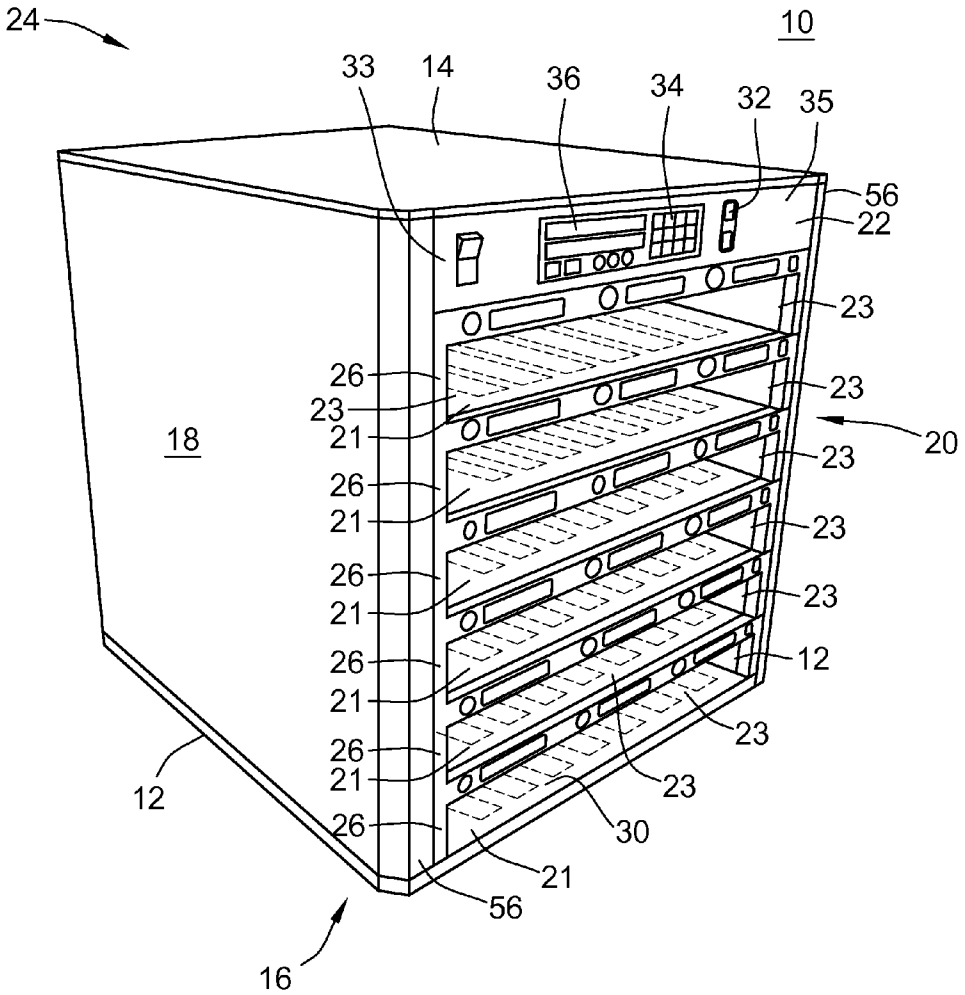

Duke Manufacturing Co. EX1021
U.S. Patent No. 10,852,002

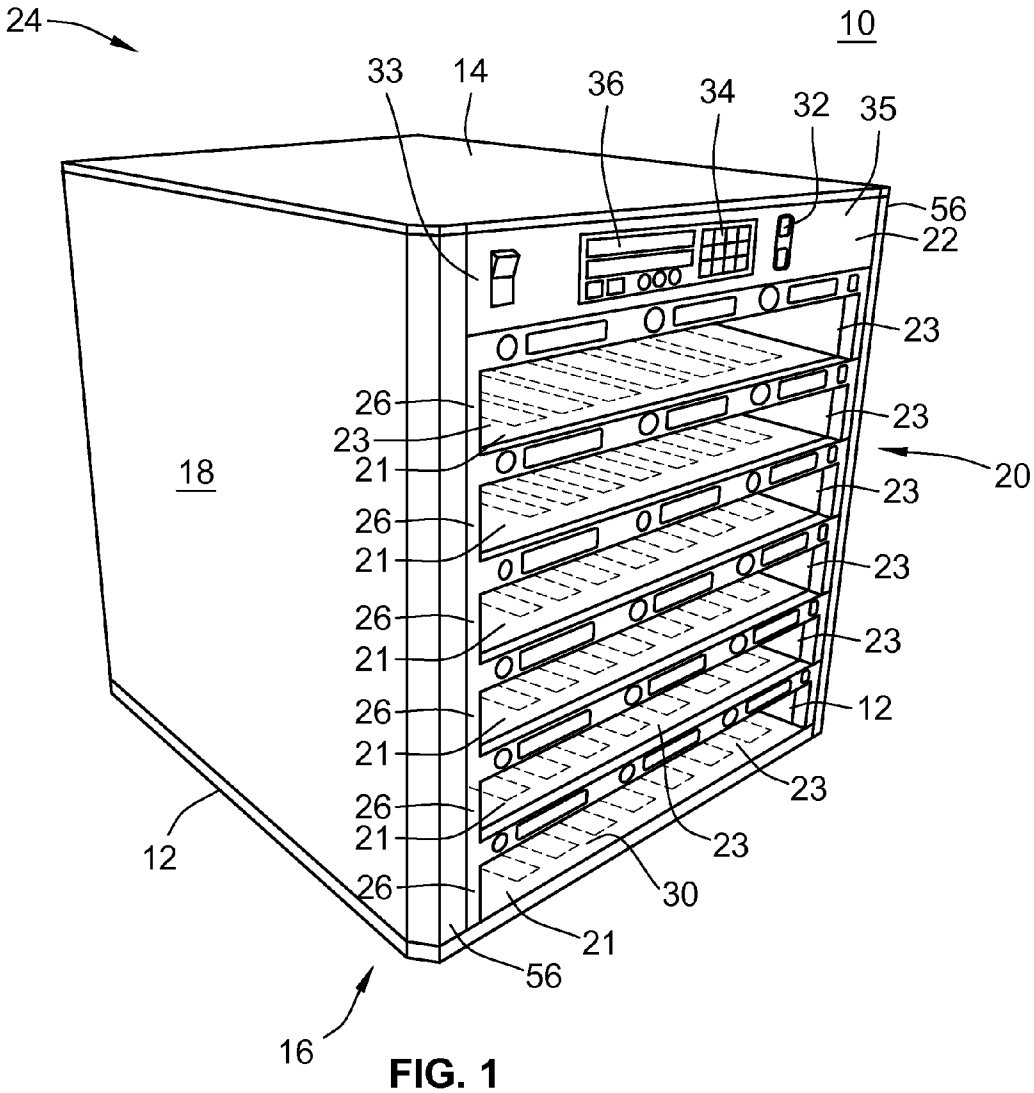

FIG. 1

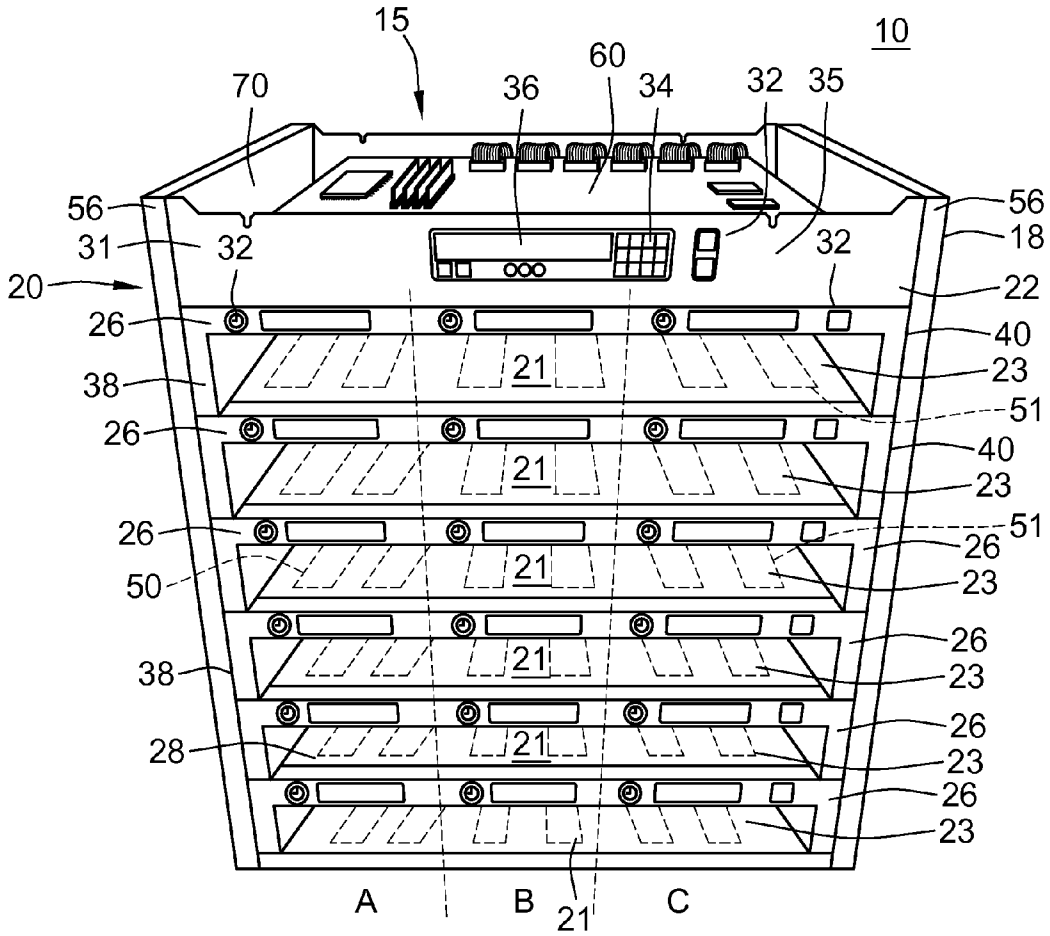
15
10
70
36
60
34
32
35
56
31
32
20
26
38
26
26
50
38
28
56
18
22
40
23
51
40
23
51
26
23
26
23
26
23
26
23
21
A
B
C

FIG. 2

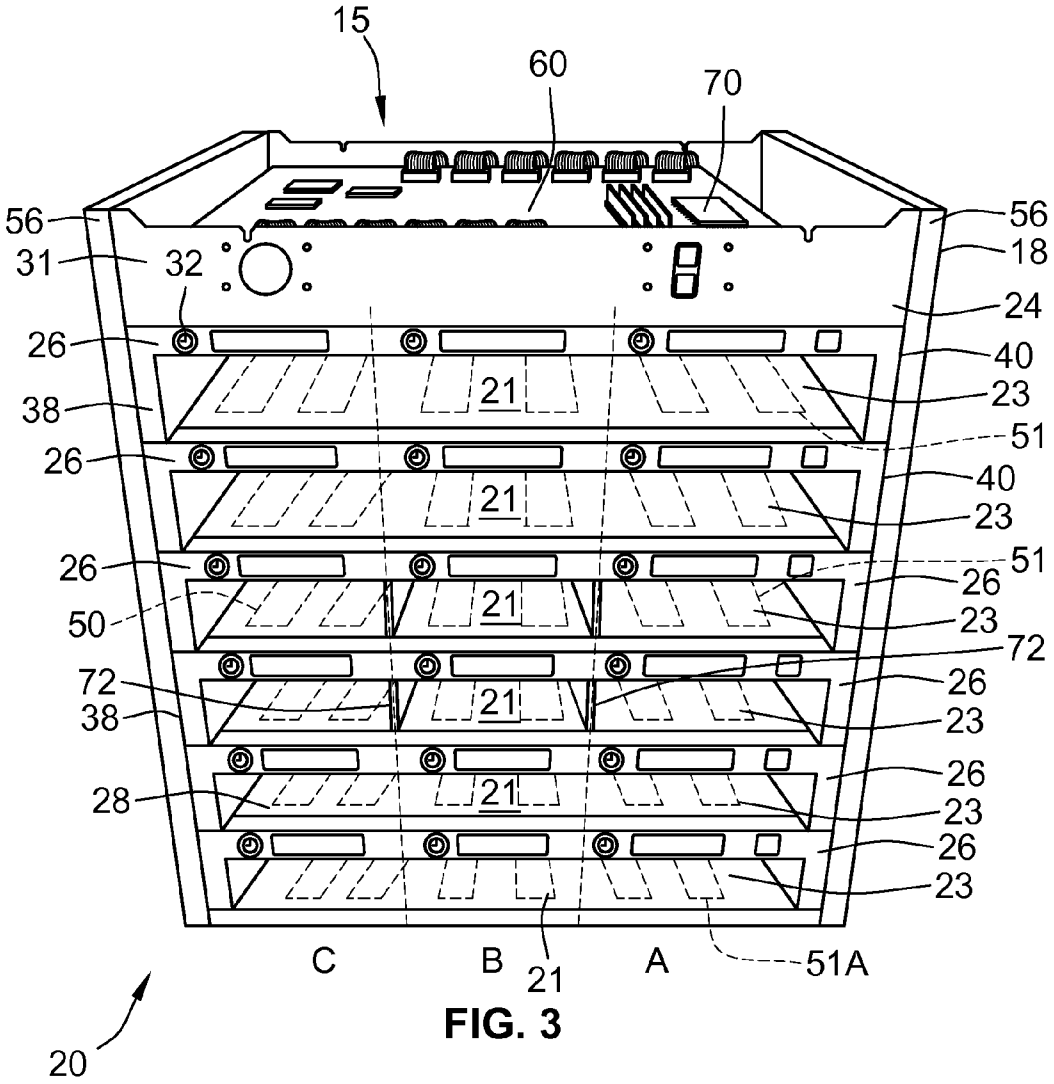
15
60
70
56
31
32
26
38
26
26
50
72
38
28
56
18
24
40
23
51
40
23
51
26
23
72
26
23
26
23
26
23
21
21
21
21
21
21
C
B
21
A
51A
20

FIG. 3

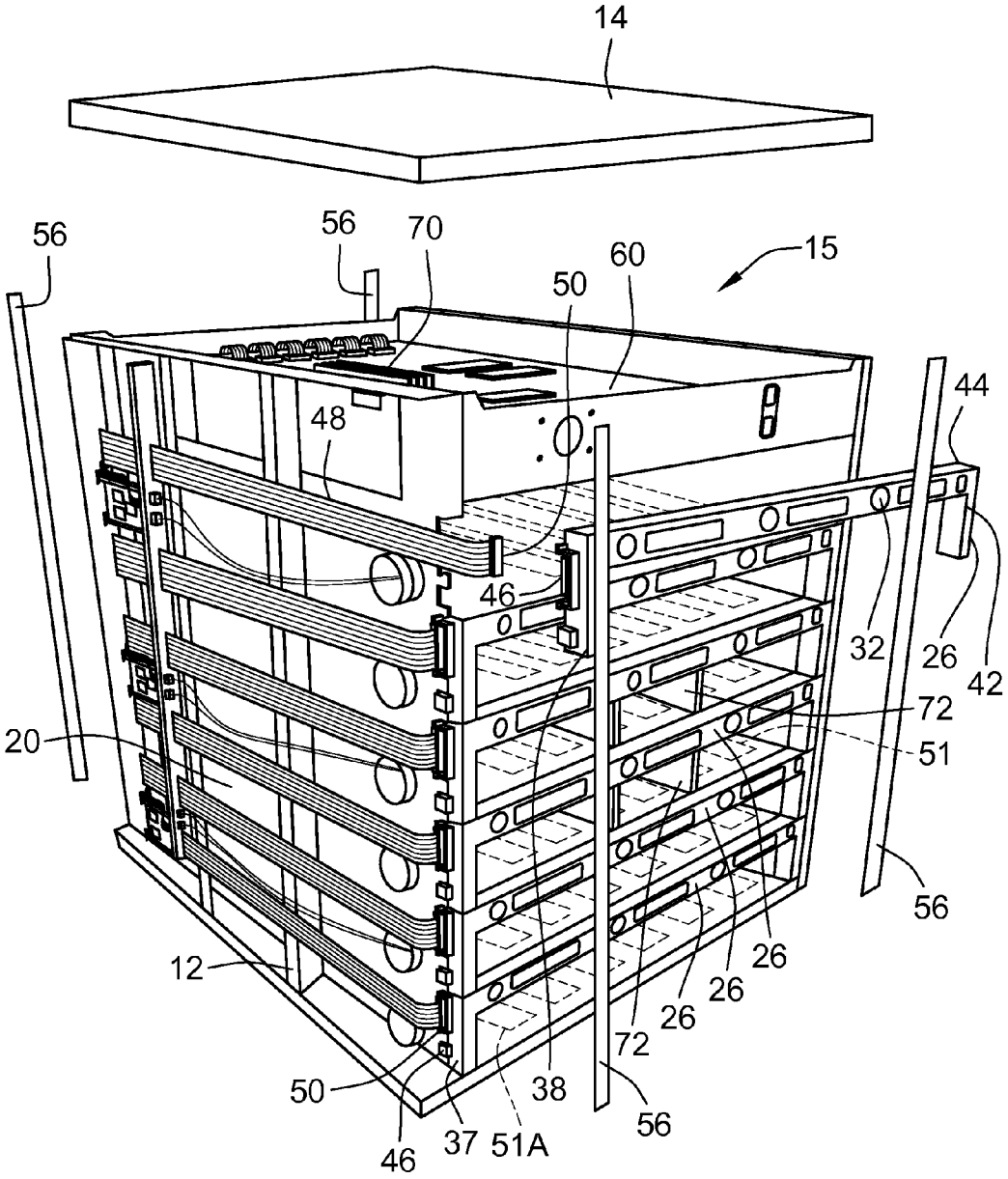
14
56
56
70
60
15
50
44
48
46
32
26
42
72
20
51
56
12
26
26
26
72
50
38
56
46
37
51A

FIG. 4

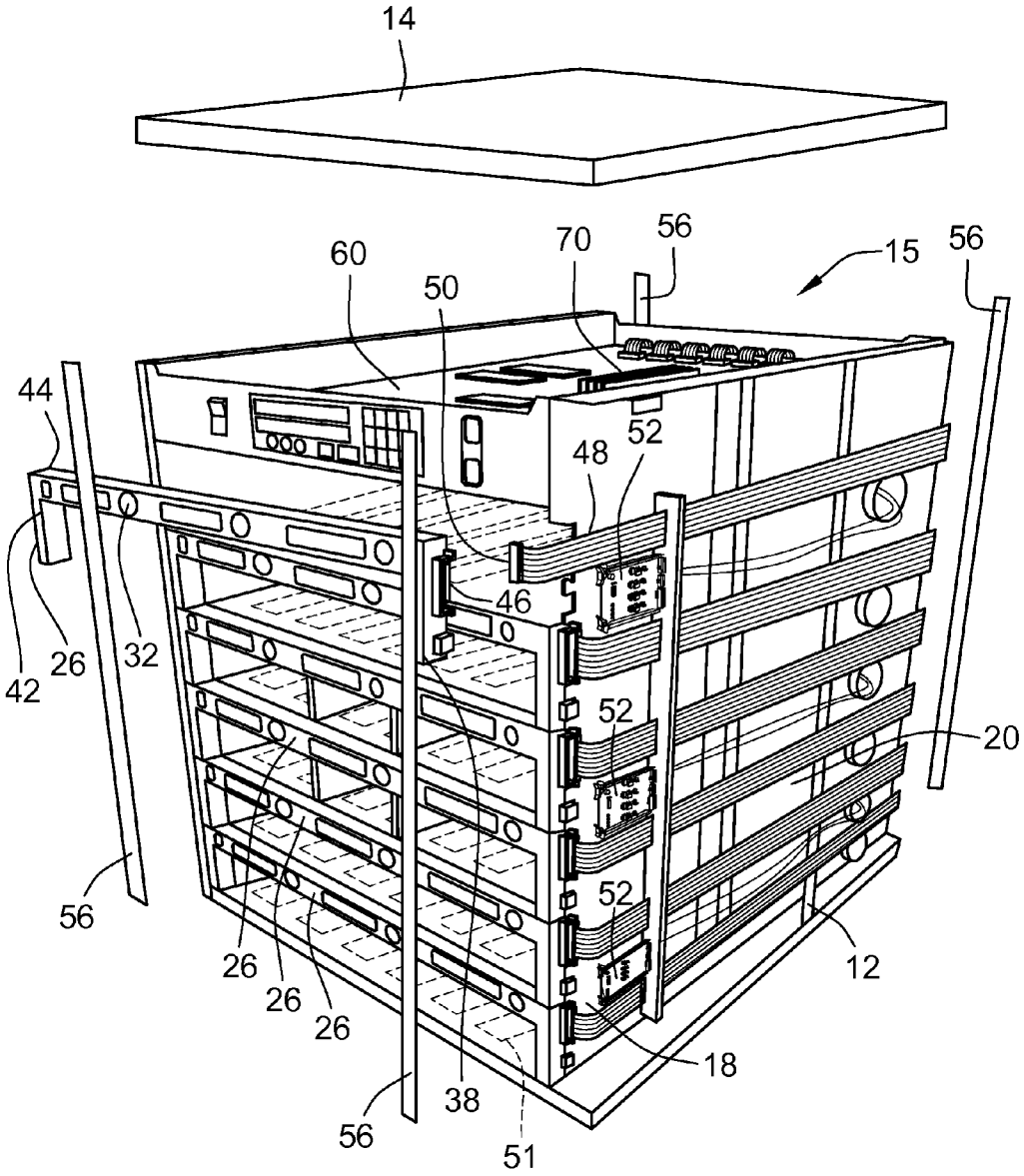
14
60
50
70
56
15
56
44
52
48
46
42
26
32
52
20
56
52
26
26
26
12
18
38
56
51

FIG. 5

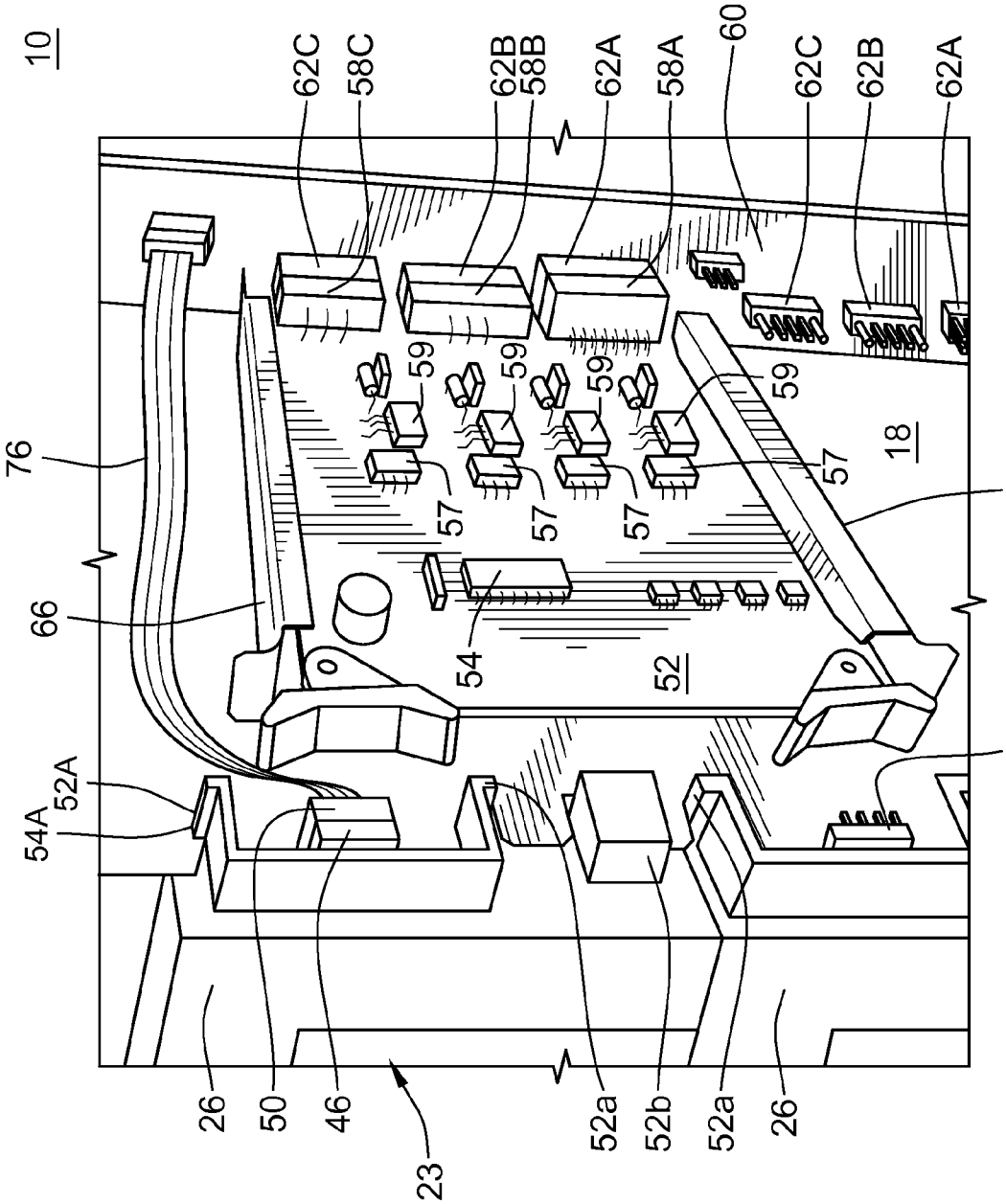
10
62C
58C
62B
58B
62A
58A
60
62C
62B
62A
76
59
59
59
59
57
57
57
57
18
66
66
54
52
46
52A
54A
26
50
46
23
52a
52b
52a
26

FIG. 6

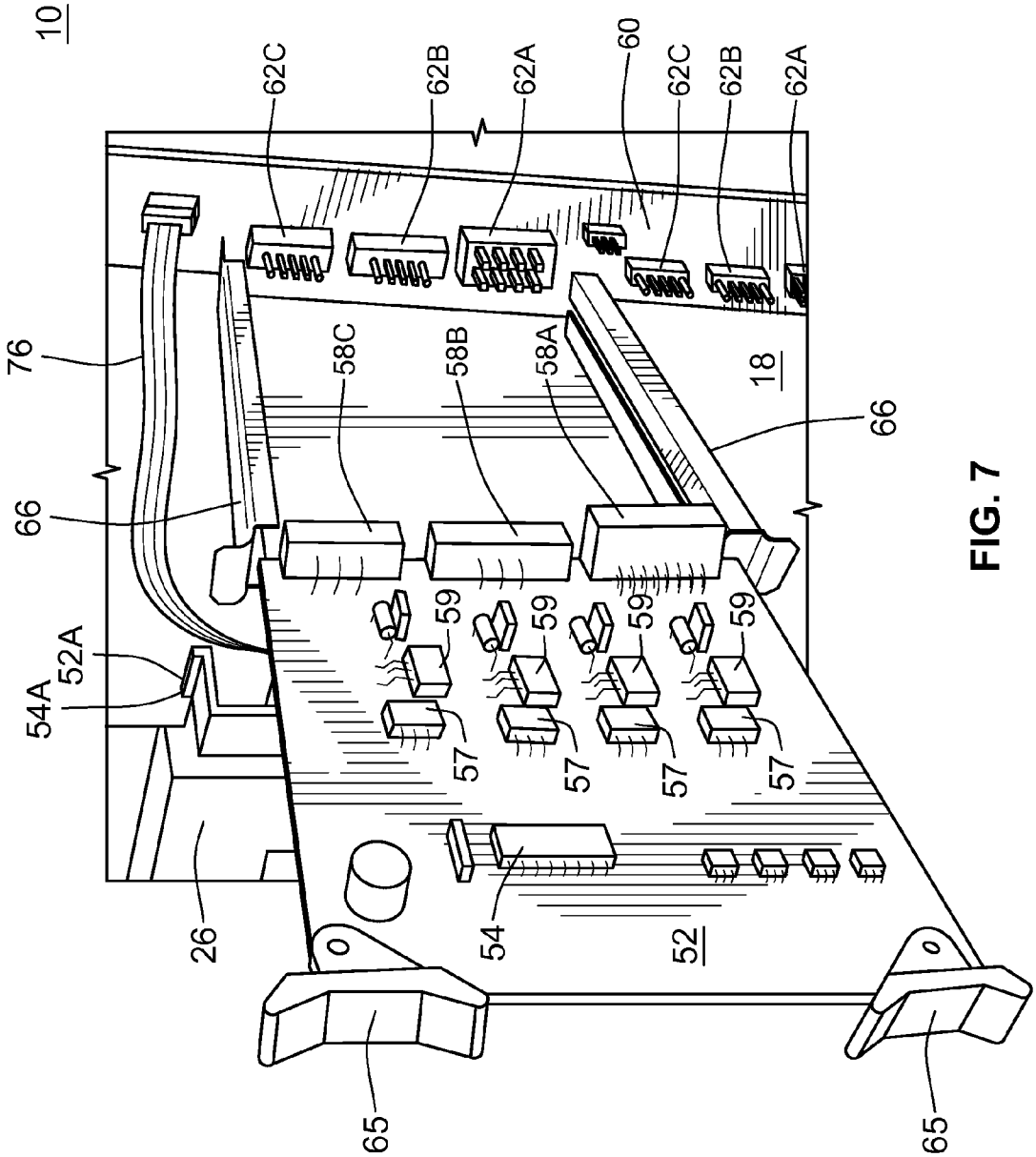
10
62C
62B
62A
60
62C
62B
62A
76
58C
58B
58A
18
66
66
59
59
59
59
52A
54A
57
57
57
57
26
54
52
65
65

FIG. 7

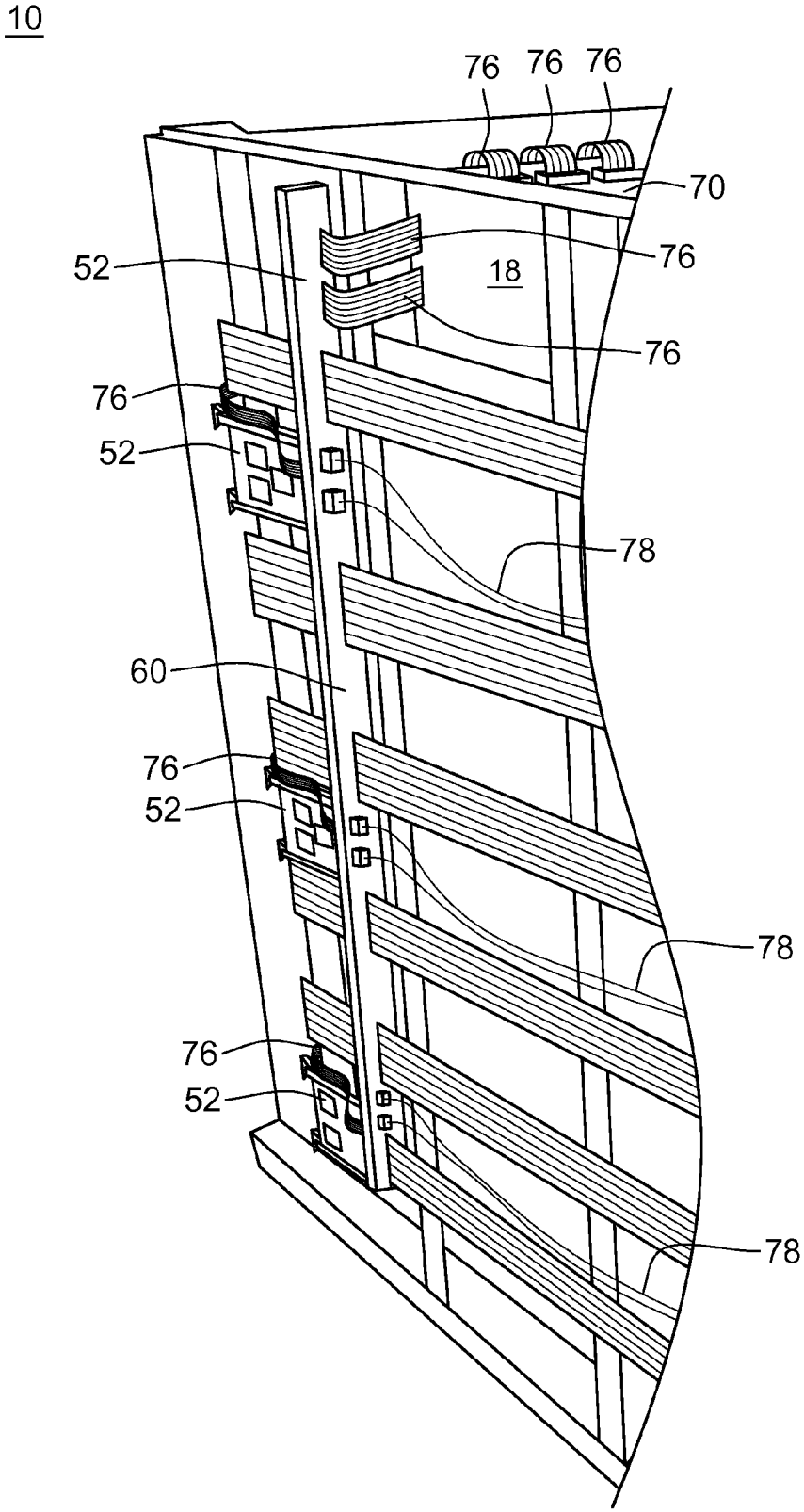

FIG. 8

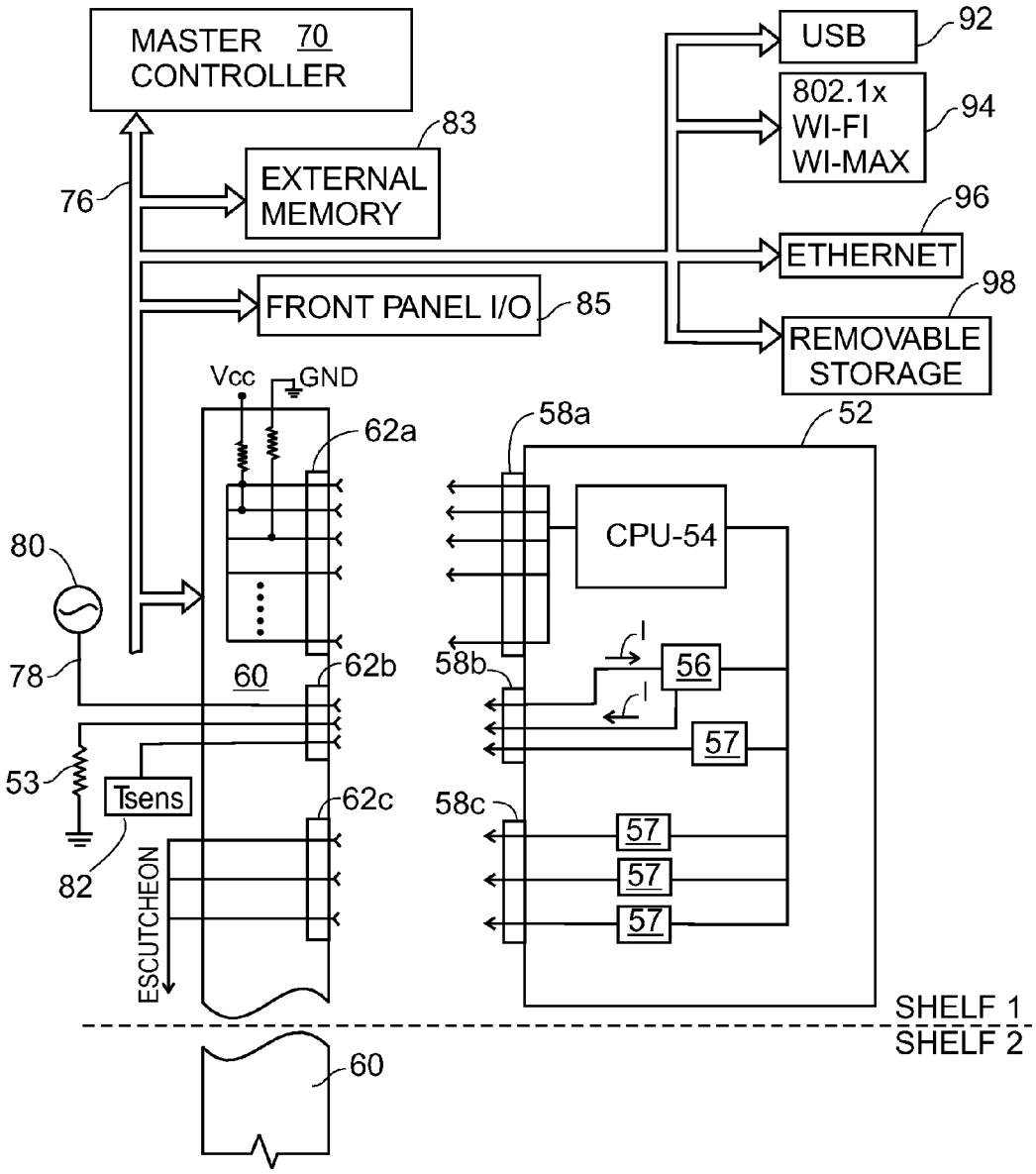
MASTER 70
CONTROLLER
USB
92
802.1x
WI-FI
WI-MAX
94
83
EXTERNAL
MEMORY
76
96
ETHERNET
FRONT PANEL I/O
85
98
REMOVABLE
STORAGE
Vcc
GND
62a
58a
52
CPU-54
80
78
60
62b
58b
56
57
53
Tsens
62c
58c
57
57
57
82
ESCUTCHEON
SHELF 1
SHELF 2
60

FIG. 9

FOOD HOLDING CABINET POWER SUPPLIES WITH DOWNLOADABLE SOFTWARE

BACKGROUND

[0001] Many restaurants' success depends on how quickly customers can be served with food items that a customer orders. If the rate at which a restaurant cooks food products equals the rate at which those same food products are being ordered and sold, a fast food restaurant can theoretically have freshly-cooked foods ready to serve for customers as they arrive. Since it is not always possible to match cooked-food production with customer ordering rates, and since fast food restaurant customers expect to receive their ordered food items quickly, many fast food restaurants pre-cook various food items and keep them warm, ready for sale until a customer arrives and purchases a pre-cooked food item.

[0002] Pre-cooked food items cannot be stored for prolonged periods and must be kept warm while they are being held. Prolonged heating causes food texture and flavor to deteriorate. The time that a food product can be kept warm yet remain palatable will vary with each type of food product. It is therefore beneficial to have an ability to store different types of foods at different temperatures and keep track of the time that a food has been kept warm.

[0003] Food holding cabinets are well known in the prior art. A problem with prior art food holding cabinets, as with most commercial restaurant equipment is that they sometimes fail and require a service technician to repair. In keeping with food service operators' goal of reducing cost, it would be desirable to provide on-site service ability to a food holding cabinet whereby repairs can be effectuated by a restaurant operator, on-site and without having to call a service technician.

BRIEF DESCRIPTIONS OF THE DRAWINGS

[0004] Preferred embodiments are set forth in the following detailed description and accompanying drawings in which like reference numerals represent like parts.

[0005] FIG. **1** is a perspective view of a universal food holding cabinet with snap-in escutcheons;

[0006] FIG. **2** is a front view of the oven depicted in FIG. **1**, with the top panel removed;

[0007] FIG. **3** is a rear view of the oven depicted in FIG. **2**;

[0008] FIG. **4** is a perspective view of the rear of the oven shown in FIG. **3** with the uppermost escutcheon removed from the rear face of the oven, and showing the oven's right-side panel (when viewed from the front) removed to reveal the right side of the oven chassis and attachment points of the escutcheons;

[0009] FIG. **5** is a perspective view of the front of the oven shown in FIG. **3** with the uppermost escutcheon removed from the front face of the oven, and showing the oven's left-side panel removed to reveal the right side of the oven chassis and attachment points of the escutcheons;

[0010] FIG. **6** is an isolated, perspective view of a control board that carries electronic devices that control heat transfer elements and which are coupled to user interfaces on the cabinet escutcheons;

[0011] FIG. **7** depicts the control board of FIG. **6**, partially removed to reveal connectors on the circuit board and connectors on a mother board for the cabinet;

[0012] FIG. **8** is a perspective view of the right side of the cabinet as viewed from the rear; and

[0013] FIG. **9** is a block diagram of electronics in the cabinet.

DETAILED DESCRIPTION

[0014] FIG. **1** is a perspective view of a temperature-controlled food holding cabinet **10**. The holding cabinet **10** is comprised of a metal frame or chassis **12**, best seen in FIG. **4** and FIG. **5**. The chassis **12** is comprised of various stamped and/or rolled metal components that form a substantially cube-shaped oven-like cabinet subdivided into several separate, temperature-controlled food-holding compartments **23**. Depending on the placement of heating and cooling elements as described more fully below, each shelf **21** is capable of maintaining one or more different temperatures for different types of food items.

[0015] As can be seen in FIG. **1**, the cabinet **10** is comprised of a top panel **14**, a bottom panel **16**, a left-side **18**, a right-side **20**, a front face **22** and a rear face **24** not visible in FIG. **1**. The top panel **14** covers electronic components, which include a master controller computer **70**, (not shown in FIG. **1**) cables and connectors (not shown in FIG. **1**), which provide electrical connections user interface devices, peripheral slave computers described below and the master controller. A top panel **31** of the front face **22** provides several user interfaces by which a cabinet operator can configure the cabinet **10** but also quickly determine its status by visually reading corresponding user interfaces. As can be seen in FIGS. **4** and **5**, the side panels cover the left and right sides and electronic circuits and associated wiring adjacent the cabinet's sides.

[0016] The front face **22** and the rear face **24**, are provided with snap-into-place bezels, which are also referred to herein as snap-in escutcheons or simply escutcheons, identified in the figures by reference numeral **26**. As described more fully below, the escutcheons **26** cover the edges **25** of the shelves **21**. They also define openings into food storage compartments **23**. And, the escutcheons **26** provide user interface devices, which include display devices and user-actuated control devices, the function and operation of which is described more fully below.

[0017] Importantly, the escutcheons **26** used on both the front and rear faces of the cabinet **10** and are interchangeable. The escutcheons **26** are thus configured to have electrically parallel electrical connectors **46** at each end of the escutcheon **26**, which mate with chassis-located connectors **50** described more fully below but preferably located to one side of each cabinet face.

[0018] FIG. **2** is a front view of the cabinet **10** with the top panel **14** removed to reveal cabinet electronics equipment in the cabinet's electronics compartment **15**, which is covered and protected by the top panel **14**. The electronic equipment in the electronics compartment **15** includes at least one "master" computer/controller **70**, for other electronics in the cabinet **10**.

[0019] Below the electronics compartment **15** are several horizontal and substantially planar, thermally-conductive shelves **21**. The shelves **21** are vertically separated from each other in the chassis **12** and fixed between the left side **18** and right side **20** to define food-holding compartments **23**. The vertical separation distance between each shelf **21** defines the height of each compartment **23** and thus the maximum height of a food item or the packaging for a food item.

[0020] The shelves **21** and the compartments **23** are considered to extend horizontally across most of the width of the cabinet **10**. The shelves **21** are preferably made from thermally conductive materials such as aluminum, copper or steel, so that the temperature of the food holding compartments **23** can be maintained by the transfer of heat from the shelf **21** into the compartment **23**, or from the compartment **23** into the shelf **21**. Different types of temperature control elements **51** are embedded into each shelf **21** or otherwise thermally coupled thereto. Compartment temperature can thus be achieved by controlling the temperature of the temperature control elements **51**, which in turn controls the temperature of the thermally conductive shelves **21** defining the compartments **23** thus effectively determining compartment temperature.

[0021] In a preferred embodiment, the shelves **21** of the cabinet **10** are open between the sides **18** and **20** and the front face **22** and rear face **24** but are nevertheless considered to be horizontally subdivided into temperature-controlled zones. The different zones for each shelf are identified in FIGS. **2** and **3** by broken vertical lines bracketing the letters A, B and C near the bottom **16** of the cabinet **10**. When the cabinet **10** is viewed from the front, as shown in FIG. **2**, the "A" zone of each shelf is at the left-hand side of the cabinet **10**; the "C" zone is locate on the right-hand side of the cabinet **10**; the "B" zone is located between the A and C zones. Temperature control of the separate zones A, B and C is accomplished by using separate temperature control elements **51** constructively "in" a zone and which are thermally coupled preferentially to one zone. By way of example, zone A in a first shelf has a temperature control element **51**A embedded in the shelf and centered in the "A" zone. The temperature control element **51**A therefore provides most of its heat output or heat sinking in the A zone of the shelf **21**.

[0022] A temperature control element such as a heater **51** embedded in the shelf **21** and centered in the "A" zone is separately controlled from other temperature control elements or heaters **51** embedded in the same shelf **21** and centered in zones B and C. In an alternate embodiment, zones A, B and C and corresponding embedded heaters **51** are thermally isolated from each other using a thermal break, such as those disclosed in co-pending application Ser. No. 12/267,449 entitled, BIFURCATED HEATED TOASTER PLATEN, which is assigned to the assignee of this application. The content of the co-pending application Ser. No. 12/267,449 is incorporated herein by reference, at least with regard to heated platens and the thermal breaks disclosed therein. In yet another embodiment, the zones are isolated from each other by vertical dividing walls **72** that extend between the top and bottom of shelves **21** defining a compartment **23** between them.

[0023] FIG. **6** is an isolated, perspective view of one of the control boards **52** that carry electronic devices, that control one or more heat transfer elements **52** in a shelf or thermally coupled to a shelf **21** and that defines a temperature-controlled, food holding compartments **23** of the cabinet **10**. The circuit board **52** is comprised of a computer **54**, preferably embodied as a single-chip microcontroller having re-programmable RAM, EEPROM (electrically eraseable, programmable read only memory) on the same die as a CPU. The computer **54** typically has an address, data and control bus by which the CPU of the computer **54** communicates with devices that are peripheral or external to the computer. Address, data and control lines or busses are well-known to those of ordinary skill in the computer and electronics arts. The computer **54** also preferably has on the same die, a serial and/or parallel communications interface or "port" through which the computer **54** can communicate with other devices in the cabinet **10** or outside the cabinet via the bus **76** described more fully below.

[0024] In an alternate embodiment, the circuit board **52** includes a microprocessor and one or more external memory devices coupled to the microprocessor's address, data and control lines using well-known, conventional methods and devices. For reasons set out below, external memory devices coupled to a microprocessor are preferably embodied as EEPROM or equivalent, in order to enable the storage of new program instructions and/or data for the computer **54**, as set forth more fully below.

[0025] In addition to the computer **54**, the circuit board **52** includes either high power field effect transistors (FETs), silicon controlled rectifiers (SCRs), TRIACs or relays, or a mixture of such devices to effectuate the control of electric energy to heat transfer devices **51**. Semiconductors as well as mechanical relays used to control electricity provided to the heat transfer elements **51**, are collectively referred to herein as current-controlling semiconductor devices and identified in the figures by reference numeral **59**, even though relays are generally considered to be mechanical devices.

[0026] The current-controlling semiconductors **59** (current control devices **59**) are electrically coupled between an external power source **80** (See FIG. **9**.) and a heat transfer element **51**. The heat transfer elements **51** used in the cabinet **10** include heating elements embedded into shelves as shown in FIGS. **2** and **3** or attached to the shelves' top or bottom surfaces. Heat transfer elements **51** also include Peltier devices, as disclosed in the applicants' co-pending patent application entitled, UNIVERSAL FOOD HOLDING CABINET HAVING SNAP IN ESCUTCHEONS, having Ser. No. 12/618,939, filed Nov. 16, 2009, the entire contents of which are incorporated herein by references. The 12/618,939 application and this application are assigned to the same entity.

[0027] In addition to current control devices **59**, the circuit board **52** includes other interface circuitry **57** to interface (electrically couple) the computer **54** to the aforementioned user interfaces in the escutcheons **26** as described above and in the aforementioned co-pending application. Such circuits **57** also include electrostatic discharge (ESD) suppression devices to enable the circuit boards **52** to be inserted into and removed from the cabinet without having to power the cabinet down. Stated another way, ESD suppressors imbue the ability to "hot swap" the circuit boards **52**.

[0028] Circuits and devices that interface a computer to an LED, LCD display, electronic paper, bulbs, switches, temperature sensors and keyboards are well known in the art. Such devices are too numerous to name but include devices such as analog-to-digital (A/D) converters, digital-to-analog converters, display drivers and the like. There are many devices that couple a computer to a peripheral device and a description of them is omitted for brevity. Regardless of how signals from peripherals to the computer **54** are coupled to it, analog and digital, information-bearing signals exchanged between devices in the cabinet, e.g., user interfaces in the cabinet **10** and in the escutcheons, sensors, and the computer **54**, determine how the computer's program instructions, when executed, effectuate temperature control of a compartment **23**.

[0029] The current-controlling semiconductor devices **56** receive control signals from the computer **54** such that signals from the computer **54** modulate or switch the current to the temperature control devices **50** in the cabinet. The control signals that the computer **54** send to the semiconductor devices **56** are determined by the computer's executable program instructions as well as data (non-executable) stored in memory and, in some instances, signals the computer **54** receives from devices in the cabinet **10**, including temperature sensors **82** (See FIG. **9**). The stored program instructions and/or data in memory, and/or provided to the computer **54** from the cabinet **10**, thus determine how current is to be delivered to the heat transfer elements **51** and thus the temperature inside the compartments **23**. Changing the program instructions in the computer **54** and/or changing data in the computer **54** thus enables changing how the computer **54** controls the semiconductor devices **56**, and in turn, the temperature or other condition inside a compartment **23**.

[0030] In FIG. **6**, the circuit board **52** is shown as having three separate connectors **58** located at one edge of the circuit board **52**. The different connectors **58** on the circuit board **52** are identified by reference numerals **58**A, **58**B and **58**C. The connectors **58** mechanically and electrically engage and mate with corresponding connectors **62** that are electrically and mechanically attached to a motherboard **60** mounted orthogonally to the sidewall **18** of the cabinet **10**.

[0031] The motherboard **60** is elongated and provided with multiple sets of connectors **62** to enable multiple circuit boards **52** to be connected to it. Conductors inside ribbon cable **76** and other wires not shown in FIG. **7** but visible in FIG. **8**, are connected between contacts on the motherboard **60** (contacts not shown), a master controller **70** for the cabinet **10**, heat transfer devices **51**, and user interfaces on the escutcheons **26** and cabinet **10**. The connectors **58** and **60**, motherboard **60**, ribbon cable **76** and other wires thus enable signals to be exchanged between the computer **54** and other devices on the circuit board **52** and devices external to the circuit board **52**.

[0032] Devices external to the circuit board **52** include temperature control elements **51**, user interface devices in the escutcheons, temperature sensors and a master controller **70** in the electronics compartment **15**. Alternate and equivalent embodiments of the circuit board **52** use, one, two or more connectors, not shown in the figure. Still other embodiments use circuit board edge connectors, well known to those of ordinary skill in the electronics and computer arts. For purposes of simplicity and brevity, connectors of any kind that enable the electrical connection of devices on the circuit board **52**, to devices external to the circuit board **52** are collectively referred to herein interchangeably as either a connector or an edge connector.

[0033] As shown in FIG. **7**, a circuit board **52** is slid on its side edges into grooves **53** formed into opposing sides of two brackets **66**, which are themselves mechanically attached to the motherboard **60** to extend orthogonally away from the motherboard **60**. The brackets **66** are spaced apart from each other and the grooves **53** deep and wide enough to allow the circuit board **52** to freely slide in and out of them. The brackets **66** thus removably support the circuit boards **52**.

[0034] The brackets **66** are separated from the sidewall **18** of the cabinet **10** by a small distance such that the height of electronic components on the circuit board **52** and/or a connector **58**, will not clear the sidewall **18** if the circuit board **52** is inserted into the brackets with the component side of the circuit board facing the cabinet sidewall **18**. The location of the brackets on the mother board **60** relative to the cabinet sidewall **18** thus prevents the circuit board **52** from being inadvertently inserted upside down, i.e. in an improper orientation. The brackets **62**, in combination with the cabinet sidewall **18** effectively form a card cage **64** that prevents the circuit boards **52** from being installed incorrectly into the motherboard **60**. The brackets **66** and cabinet sidewall also make the circuit boards **52** "self-aligning" with respect to the connectors **62** on the motherboard **60**.

[0035] FIG. **8** is a perspective view of the right side **18** of a preferred embodiment of the cabinet **10**, as viewed from the rear **24** of the cabinet **10**. Ribbon cables **76** can be seen connected between the mother board (connections on the mother board not visible but well known to those of ordinary skill) and a master controller/computer **70** located in the electronics compartment **15**. Conductive circuit "traces" on the mother board carry electrical signals from the ribbon cable conductors, to various terminals of various connectors **62**, into which the aforementioned circuit boards **52** are installed. (The conductive traces or paths on the mother board **60** are not visible in the figure but such traces are well known to those of ordinary skill in the electronic arts.) The ribbon cables **76** carry various signals that include address signals, data signals and control signals exchanged between the master controller **70** and a computer **54** on a circuit board **52** connected to the mother board **60**. They also carry signals to other devices that are peripheral to the master controller **70**, as shown in FIG. **9**. The ribbon cables **76** are considered herein to both provide and act as a "bus" between the master controller **70** and various computers **54** to which the bus is connected to.

[0036] The concept of a bus carrying digital signals between a computer and devices peripheral to the computer, is well known to those of ordinary skill in the computer and electronic arts. Since the functionality of the bus is effectuated by the ribbon cables (and equivalents thereof), for purposes of simplicity, the terms "bus" and "ribbon cable" are thus used interchangeably hereinafter. For purposes of clarity, both of them are identified by reference numeral **76**.

[0037] The computer **54** on the circuit board **52** is responsive to commands it receives from the master controller **70** over the bus **76**. It is also responsive to information and inputs it receives from devices peripheral to it, such as escutcheon-located user interface devices and one or more temperature sensors, not shown. In a preferred embodiment, the computers **54** on the control boards **52** are thus considered to be "slaved" to the master controller **70**.

[0038] As shown in FIG. **5**, a preferred embodiment of the cabinet **10** has multiple circuit boards **52**, each of which has at least one computer **54**. In a preferred embodiment, each circuit board **52** controls the temperature control elements for two different shelves.

[0039] Each computer **54** on each circuit board **52** is coupled to the bus **76** such that each computer **54** "sees" all of the "information" on the bus **76**. The master controller **70** selectively communicates with a particular slave computer **54** using an address that each slave computer **54** obtains from the mother board **60** (or a connector **62**). The address obtained from the mother board **60** corresponds to a shelf or shelves that a circuit board **52** will control.

[0040] In a preferred embodiment, the communications between computers is via a serial communications protocol reminiscent of Ethernet. Messages from a sender are broad-

cast on the bus. Broadcast messages are received and selectively acted upon by the recipient to which a message was addressed.

[0041] Packets sent over the bus include a field that identifies the source of a packet by the logical address of the sender and a second field that identifies the recipient of the packet by its logical address. A packet payload contains all or part of a message being sent from the sender to the recipient. The addresses used by the master controller **70** and the slave computers **54** to communicate with each other are the addresses obtained from the mother board **60**.

[0042] The address of a particular card cage and thus a computer **54** on a circuit board **52**, is effectuated by electrically connecting various pins of the connector **62** to either V_{cc} or ground, which represent logic 1 and zero respectively. When the connectors **58** on the circuit board **52** engage the connectors **62** on the mother board **60**, executable program instructions stored in memory for the computer **54**, cause the computer **54** to "read" its logical address from the connectors **58**/**62**. In an alternate and equivalent embodiment, signal leads on the mother board **60** apply voltages of V_{cc} or ground to pins of the connectors **62** installed into the mother board **60**. In yet another embodiment, so-called DIP switches are used on the circuit boards **52** instead of connectors and configured "on" or "off" to provide a card cage address to the computer **54**.

[0043] FIG. **9** is a block diagram of electronic devices that control the cabinet **10**. The master controller **70** communicates with electronic devices located on control circuit boards **52**, through a computer or "CPU" **54** on each circuit board **52**. The master controller **70** and the slave computers **54** communicate with each other via the bus **76**.

[0044] Conductors in the ribbon cable that comprises the bus are connected to various terminals or connection points on the motherboard **60**. Conductive paths or "traces" on the motherboard, carry the signals on the ribbon cable, to different terminals of different connectors **62**A, **62**B and **62**C.

[0045] In a preferred embodiment shown in the figure, a first pair of connectors **62**A and **58**A that connect to each other, convey signals between the controller **54** and the master controller **70**. Three conductors are three address lines, which are identified by reference numeral **84**. Two of the address lines **84** are shown as being "pulled-up" to V_{cc}. One address line **84** is "pulled down" to ground through a pull down resistor. The voltages on the three address lines **84** correspond to a binary-valued or digital address of "011" or "110" depending on which line is considered to be the least significant bit and/or most significant bit of a three-bit address space, i.e., addresses ranging from zero through seven inclusive.

[0046] When a control circuit board **52** is inserted into the card cage for shelf **1** and the connectors **58** & **62** engage, the controller **54** on the circuit board **52** can scan the address of the card cage/shelf to determine the address that it will use on the bus **76**. The slave controller **54** thus determines which shelf it is responsible for controlling. Communications between that slave controller and the master controller **70** use the address obtained from the mother board.

[0047] Hard-wiring an address for a particular shelf of the cabinet enables software in the controller **54** to determine where it is installed and how it is to operate. It also allows control boards **52** to be generic, i.e., non-specialized.

[0048] Shelf **1** could be used to keep certain types of foods at a high temperature. A different shelf could be required to kept cold. Imbuing the control boards **52** with the ability to read their locations on the mother board enables the master controller **70** to flexibly control the cabinet **10** by controlling what the slave computers **54** are able and/or permitted to do.

[0049] In FIG. **9**, a second pair of connectors **58**B & **62**B provide connections between the power supply devices **56**, an external power source **80** and heat transfer elements **51**. An interface **57** couples a temperature sensor **82**, to the CPU **54**. A third connector set **58**C & **62**C couple signals to and from the escutcheon **26** through other interface devices **57** which are themselves coupled into the CPU **54**.

[0050] The master controller **70** is depicted as being connected to an external memory device **83** via the bus **76**. The master controller **70** includes software, which when executed by the controller **70**, maintains the temperature of compartments **23** by controlling the slave computers **54**, directing each of them as needed to keep all the compartments' temperatures relatively constant in order to keep a food item at a substantially constant temperature. The master controller **70** also maintains the time that a food item has been kept in a compartment, which is determined by a user's actuation of a switch or other input/output device on an escutcheon **26**, the actuation of which is read initially by a slave computer **54** and then passed to the master controller **70** over the bus.

[0051] Time periods that a food item is kept in a compartment are compared against time limits for the food item. Such time limits can be user-specified through the front panel input/output (I/O) 85.

[0052] Those of ordinary skill in the art will recognize from the foregoing description that food items in a multi-compartment food holding cabinet can be kept at a constant temperature by appropriately controlling heat transfer elements such as electric heaters. In the apparatus described above, the method includes downloading to a first slave computer from a master computer, data or executable program instructions that control the slave computer's control over heat transfer devices. The data and/or instructions downloaded to one slave computer can optionally be different from the data and/or instructions downloaded to a second computer. The determination of which set of instructions to download to the power supplies **52** can be made using an operating parameter for a compartment **23** that the power supply is connected into via the motherboard **60**.

[0053] Data downloaded to the slave computers can be data that specifies a holding temperature for the first compartment, a holding time limit for a food item, operational instructions, i.e., instructions to display to a user as to how to operate the cabinet, an elapsed time for a food item held in the first compartment and/or the identity of a food item in a first compartment.

[0054] Those of ordinary skill in the art will recognize that the master controller **70** is preferably a single chip microcontroller with its own on board RAM, ROM and EEPROM. The bus also couples the master controller **70** to the cabinets' front panel input/output-user interface devices described above. Finally, the master controller **70** is also coupled to various communications devices through which the master controller **70** can communicate with the outside world. The interfaces for external communications include a USB port **84**, and 802.1x (wifi or wimax) wireless interface **86** as well as an Ethernet interface **88**, removable storage device such as a CD or DVD drive, SIM cards or other removable storage media. The external communication interfaces **84**, **86** and **88** enable

the master controller **70** to receive executable program instructions and data for either the master controller **70** or the slave CPU **54**.

[0055] In a preferred embodiment, memory onboard the master controller die, includes memory that stores executable program instructions for the slave computer **54** as well as data. In an alternate embodiment, the executable program for the slave computer **54** and data can also be stored in the external memory **83**.

[0056] Storing the program executed by the slave computer **54** in the master controller provides several benefits. Firmware for the slave computer **54** can be kept up-to-date by acquiring new programs via one or more of the external communications interfaces. It also allows the firmware for the slave computer **54** to be changed based on customer requirements or food holding requirements.

[0057] In a first embodiment, the slave computer **54** on the circuit board **52** is pre-programmed with only a small program, which reads the address of the shelf wherein it is located from the mother board **60**. Other instructions issue a request to the master controller **70** via the bus, asking the master controller **70** for a download of instructions that will give the slave controller **54** its "personality." In yet another embodiment, the slave computer **54** is pre-programmed with enough code for it to notify the master controller of its presence on the bus and to thereafter wait for a download from the controller **70**. In yet a third embodiment, all of the operating instructions are burned into the slave computer **54**, however, operating parameters such as temperatures to maintain a compartment at, or food holding time limits are downloaded from the master controller **70** or received through one or more of the user interfaces. In yet another embodiment, the slave computer **54** is pre-programmed with sufficient instructions that enable it to take control of the bus **76** and download its operating program and/or data from the external memory under its own control. Once the program instructions are down loaded from the external memory, the slave computer **54** can thereafter operate autonomously, subject of course to the control instructions it receives from the master controller. Microprocessors that embody the master controller **70** and the slave computers **54** are different types of devices, however, alternate embodiments use the same microprocessor for both the master and slave functions.

[0058] In most implementations, a particular program is required to control heating elements for the shelves. A separate and different program is required to control Peltier devices that refrigerate and/or heat one or more compartments.

[0059] It should be noted that the download provided to the slave computer **54** includes software that reads and controls the user interfaces in the escutcheons for a particular shelf. Such software includes instructions and data to display information to an operator.

[0060] In yet another embodiment, the downloaded software includes diagnostics that can test devices on the circuit board **52** as well as the functionality of heat control elements **50**, temperature sensors **82**.

[0061] Master/slave communications over the bus **76** include: downloading commands to the slave computers **54** from the master controller; uploading commands/requests from the slave computers **54** to the master controller; downloading operating parameters, i.e., data to the slave computers from the master controller; uploading collected data from the slave computers **54** to the master controller; and, downloading executable program instructions from the master controller to one or more of the slave computers **54**, which when loaded into a slave computer, change the operating characteristics or "personality" of a slave computer **54** into which the new program instructions are installed. The master controller **70** can either demand the slave computer **54** to accept a download or receive a request for a download from a slave computer **54**.

[0062] In a preferred embodiment, the download is requested by the slave computer **24**. In an alternate embodiment, the slave computers **54** are able to seize control of the bus **76** and autonomously download instructions and/or data from either the external memory **83** or from one or more of the external communications devices **92**, **94**, **96** and/or **98**.

[0063] The foregoing description is for purposes of illustrations only. The true scope of the invention is set forth in the appurtenant claims.

What is claimed is:

1. A temperature-controlled food holding cabinet (food holding cabinet), the food holding cabinet comprised of:
- an electrically-powered heat transfer element (element) thermally coupled to a food holding compartment (compartment);
- a computer controlled power supply for the element, the power supply being comprised of:
  - a first computer (first computer), which executes program instructions stored in a memory device;
  - a first memory device coupled to the first computer and storing executable program instructions for the first computer therein;
  - an electrical power control device coupled to:
    - an electric power source;
    - the first computer; and
    - the element;
    - the electrical power control device controlling electric power delivered to the element from the electrical power source in response to at least one signal received from the first computer; and
  - a second computer operatively coupled to the first computer, the second computer being capable of obtaining of providing to the first computer as a download, at least one of:
    - data; and
    - executable program instructions for the first computer.

2. The food holding cabinet of claim **1**, wherein the first computer and the second computer are different types of computers.

3. The food holding cabinet of claim **1**, further comprised of a computer bus configured to carry information-bearing signals between the first and second computers.

4. The food holding cabinet of claim **1**, wherein the second computer is operatively coupled to the first memory device through the first computer.

5. The food holding cabinet of claim **1**, wherein the electrical power control device is at least one of:
- a semiconductor; and
- an electromagnetic relay.

6. The food holding cabinet of claim **2**, wherein the second memory device coupled to the second computer, stores at least one of:
- data, for the first computer; and
- executable program instructions, for the first computer.

7. The food holding cabinet of claim **1**, wherein the first computer and the first memory device are co-located on the same semiconductor die.

8. The food holding cabinet of claim **1**, wherein the first computer is configured to receive a download from the second computer, the download being provided to the first computer in response to at least one of:

a download request sent from the first computer to the second computer; and

a download command sent from the second computer to the first computer.

9. The food holding cabinet of claim **8**, wherein the download is stored in the first memory device, under the control of the first computer.

10. The food holding cabinet of claim **8**, wherein the download is stored in the first memory device, under the control of the second computer.

11. The food holding cabinet of claim **8**, wherein the second computer is configured to pass the download to the first computer, through the second computer prior to sending it to the first computer.

12. The food holding cabinet of claim **1**, wherein the first computer is configured to control temperature for the compartment according to data received by the first computer in a download.

13. The food holding cabinet of claim **1**, wherein the first computer is configured to control temperature for the compartment according to executable program instructions received in said download.

14. The food holding cabinet of claim **1**, wherein the element is a resistive heating element.

15. The food holding cabinet of claim **1**, wherein the compartment is a heated compartment.

16. The food holding cabinet of claim **1**, further comprised of a temperature sensor thermally coupled to the compartment, the first computer receiving a signal from the temperature sensor representative of a temperature inside the compartment and controlling electric power to the element in response thereto.

17. The food holding cabinet of claim **1** further comprised of a timer configured to determine the time that a food item has been in the compartment.

18. The food holding cabinet of claim **17**, wherein the timer is comprised of one of instructions executed by at least one of the first computer and the second computer.

19. The food holding cabinet of claim **1**, further comprised of a first user interface, operatively coupled to the second computer, the first user interface being configured to display at least one of:

the temperature of the compartment;

the time that a food item has been inside the compartment;

the time that a food item should remain inside the compartment;

the identity of a food item in the compartment;

operational instructions;

diagnostic information; and

an expiration notice that the food can no longer be used.

20. The food holding cabinet of claim **1**, wherein the bus is a serial bus.

21. The food holding cabinet of claim **1**, wherein the first and second computers are configured to communicate on the bus using an address broadcast on the bus.

22. The food holding cabinet of claim **21**, wherein the first computer obtains said address from a mother board to which the first computer is coupled.

23. The food holding cabinet of claim **1**, wherein the food holding cabinet is comprised of a plurality of food holding compartments, at least one temperature control element being thermally coupled to each compartment and, a computer-controlled power supply for each element, each power supply having a unique address.

24. The food holding cabinet of claim **23**, wherein the food holding cabinet is further comprised of a mother board to which the power supplies are operatively connected, and wherein the address for each power supply is determined by a position on the mother board into which a power supply is operatively connected.

25. The food holding cabinet of claim **1**, further comprised of a data port coupled to the second computer, the data port being configured to enable the transfer of digital information to and from the second computer.

26. The food holding cabinet of claim **25**, wherein the data port is comprised of at least one of:

a USB connector;

a SIM card connector;

an optical disk drive;

an 802.xx network interface.

27. A temperature-controlled food holding cabinet (food holding cabinet), configured to maintain food items, at a different temperatures, for a plurality of different holding times, the food holding cabinet comprised of:

a plurality of food holding compartments (compartments);

at least one electrically-powered heat transfer element (element), thermally coupled to a corresponding compartment and effectuating a temperature inside the corresponding compartment;

a computer bus, configured to carry computer signals around the food holding cabinet;

a plurality of computer-controlled power supplies (power supplies), each power supply coupled to at least one element and being comprised of:

a circuit board;

a first computer (first computer) attached to the circuit board and coupled to the bus through a first type of connector attached to the circuit board;

a first memory device coupled to the first computer and storing at least one of:

data for the first computer; and

executable program instructions for the first computer,

an electric power control device attached to the circuit board and operatively coupled to:

an electric power source;

the first computer; and

the element;

the electric power control device controlling electric power provided to the element in response to a control signal from the first computer; and

a second computer operatively coupled to a plurality of the first computers via the bus, the second computer being capable of providing a download to a plurality of first computers via the bus.

28. The food holding cabinet of claim **27**, wherein the first and second computers are different types of computers.

29. The food holding cabinet of claim **27**, wherein the download is comprised of data.

30. The food holding cabinet of claim **28**, wherein the download is comprised of executable instructions for the first computer.

31. The food holding cabinet of claim **27**, wherein the electric power control device is one of:

a semiconductor; and

an electromagnetic relay.

32. The food holding cabinet of claim **27**, wherein the computer bus is further comprised of:

a mother board having a plurality of second type connectors electrically coupled to the bus;

wherein at least one of, the mother board and a second type connector provides an address to a computer-controlled power supply connected to each second type connector.

33. The food holding cabinet of claim **32**, wherein the second computer is configured to:

provide a first download to a first computer at a first address; and,

provide a second download to a second computer at a second address, the first and second downloads being different from each other.

34. The food holding cabinet of claim **32**, wherein the second computer is configured to:

provide a first download to a first computer at a first address; and,

provide said first download to a second computer at a second address.

35. The food holding cabinet of claim **32**, wherein the food holding cabinet is configured such that a download provided to a first computer-controlled power supply and a download to a second computer-controlled power supply, are determined by first and second addresses respectively.

36. The food holding cabinet of claim **32**, wherein first and second power supplies are discrete entities and wherein the food holding cabinet is configured such that a download provided to the first power supply and a download provided to the second power supply is determined by the first and second power supply identities.

37. The food holding cabinet of claim **27**, wherein the second computer includes a plurality of different downloads for a plurality of different first computers.

38. The food holding cabinet of claim **27**, wherein the second computer includes a plurality of different downloads for a plurality of different first computers and wherein an identity for the different downloads is transmitted over the bus.

39. The food holding cabinet of claim **27**, wherein a first computer on a first power supply is different from a first computer on a second power supply.

40. The food holding cabinet of claim **27**, wherein a download provided to a first power supply and a download to a second power supply, are determined by a type of food item to be held in a first compartment and a type of food item to be held in a second compartment, the first and second types of food items being different from each other.

41. The food holding cabinet of claim **32**, wherein the food holding cabinet is configured such that the download provided to the first power supply and to the second power supply are determined by a type of food item to be held in a first compartment and a type of food item to be held in a second compartment, the first and second types of food items being different from each other.

42. A method of storing a plurality of different food items, at a plurality of different holding temperatures in a food holding cabinet having a plurality of different food holding compartments, each compartment's temperature being controlled by electrical energy provided to a corresponding electrical heat transfer element by a computer, each heat transfer element being controlled by program instructions executed by a first, slave computer, which is coupled to a second master computer via a bus, the method comprised of:

downloading to a first slave computer from the master computer, at least one of: a first set of data and a first set of executable program instructions.

43. The method of claim **42**, further comprising the step of:

downloading to a second slave computer from the master computer, a second set of executable instructions to control a second element for a second compartment, the first and second sets of executable instructions being different from each other.

44. The method of claim **42**, further comprising the step of:

downloading to the first slave computer from the master computer, a first operating parameter for a first compartment, the first operating parameter determining at least one of:

a holding temperature for the first compartment;

a holding time limit for a food item;

operational instructions;

an elapsed time for a food item held in the first compartment; and

the identity of a food item in a first compartment.

45. The method of claim **43**, including the step of determining which set of instructions to download to the power supplies according to at least one operating parameter for corresponding compartments.

46. The method of claim **43**, including the step of determining which set of instructions to download to the power supplies according to differences between power supplies.

47. The method of claim **42**, further including the step of: receiving executable program instructions for a power supply through a data port device coupled to the master computer.

48. The method of claim **49**, wherein the step of receiving executable program instructions includes the step of receiving said instructions from at least one of:

a USB port;

an optical storage device;

a magnetic storage device;

a semiconductor memory device; and

a wireless interface.

* * * * *