US 20110252813A1

(19) United States

(12) Patent Application Publication

Veltrop

(10) Pub. No.: US 2011/0252813 A1

(43) Pub. Date: Oct. 20, 2011

(54) POINT-OF-USE HOLDING CABINET

(75) Inventor: **Loren Veltrop**, Chicago, IL (US)

(73) Assignee: **PRINCE CASTLE, INC.**, Carol Stream, IL (US)

(21) Appl. No.: **12/763,553**

(22) Filed: **Apr. 20, 2010**

Publication Classification

(51) **Int. Cl.**

F25B 21/04	(2006.01)
F25B 29/00	(2006.01)
F28F 3/08	(2006.01)
F25B 21/02	(2006.01)
A47F 3/04	(2006.01)

(52) **U.S. Cl.** **62/3.3**; 62/3.6; 62/255; 165/166; 165/64

(57) **ABSTRACT**

A point-of-use food holding cabinet keeps food products cold using a conventional refrigeration device or a semiconductor solid state heat sink. In one embodiment, one compartment can be kept cold or refrigerated while an adjacent compartment can be kept warm or hot. Solid state heat pumps such as Peltier devices absorb heat on one side and emit heat on the other. By configuring the solid state heat sinks appropriately, one compartment or shelf of a holding cabinet can be refrigerated while an adjacent compartment can be kept warm.

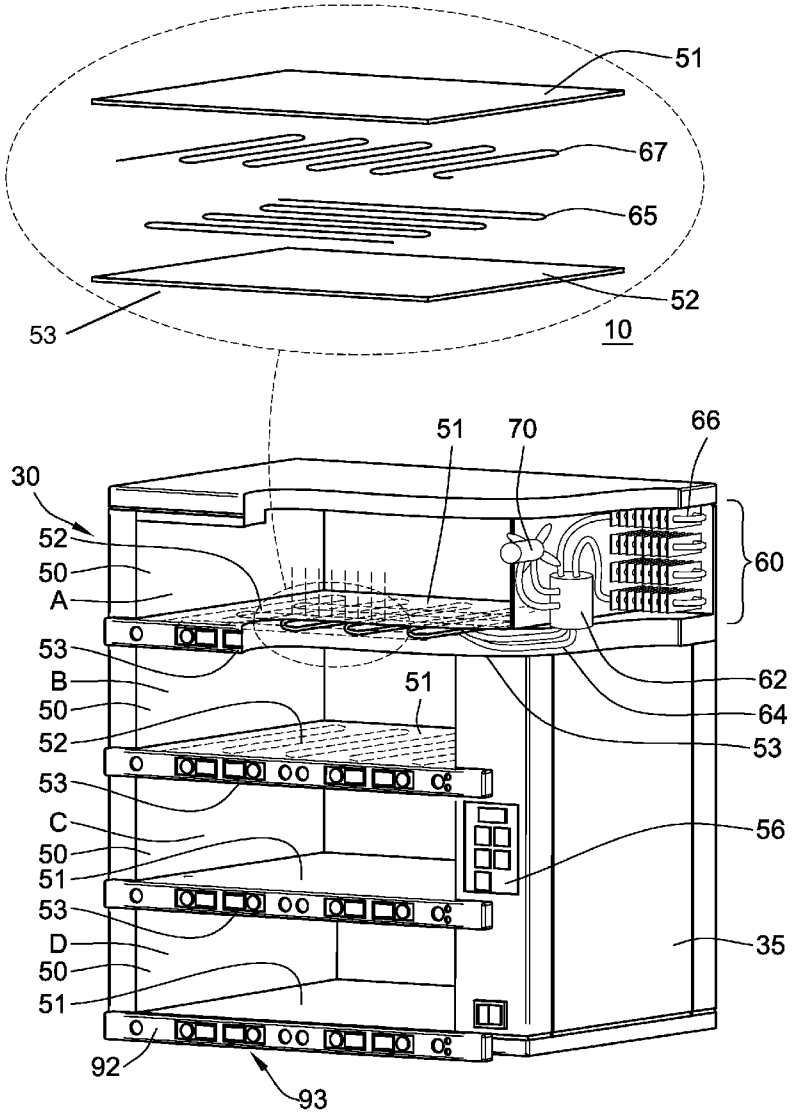

Duke Manufacturing Co. EX1022
U.S. Patent No. 10,852,002

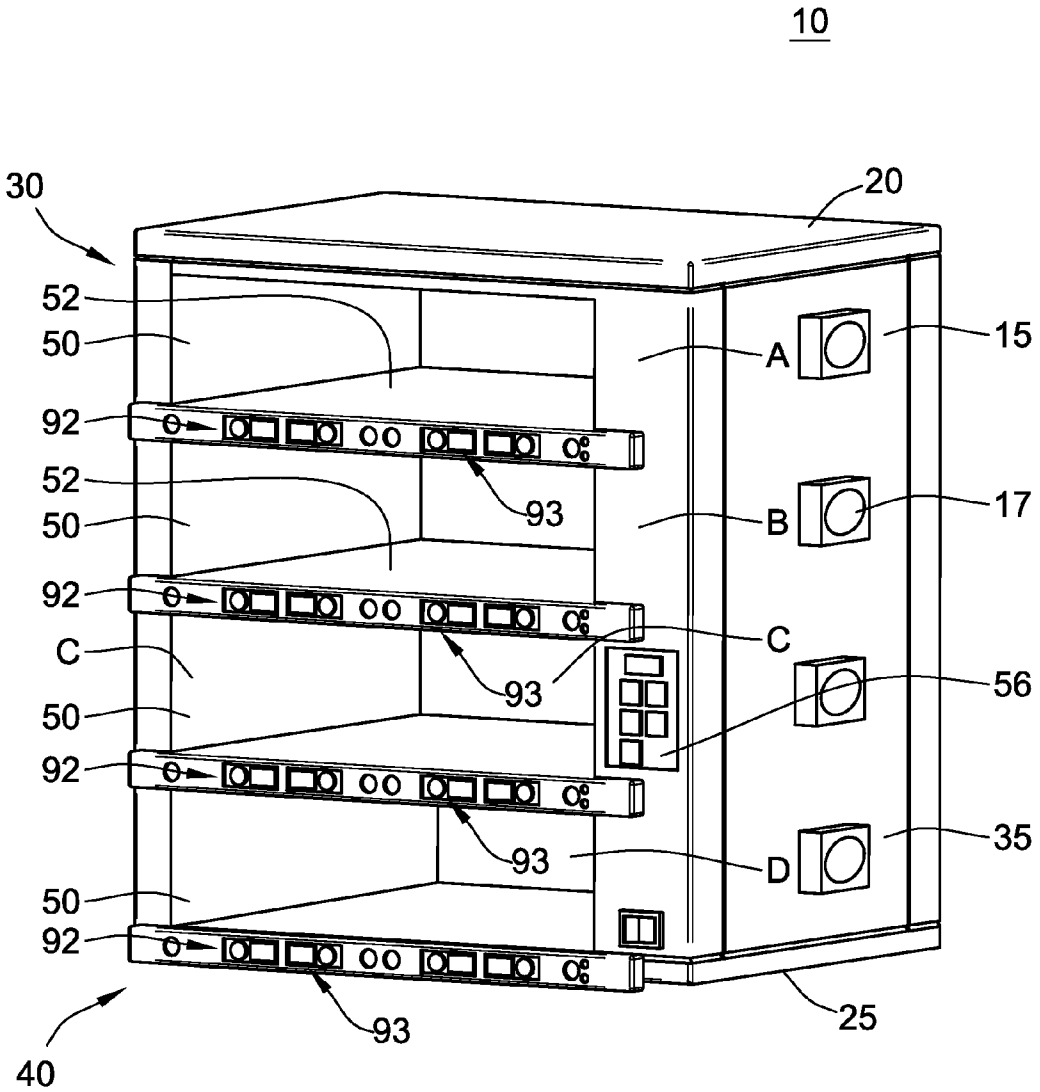

FIG. 1

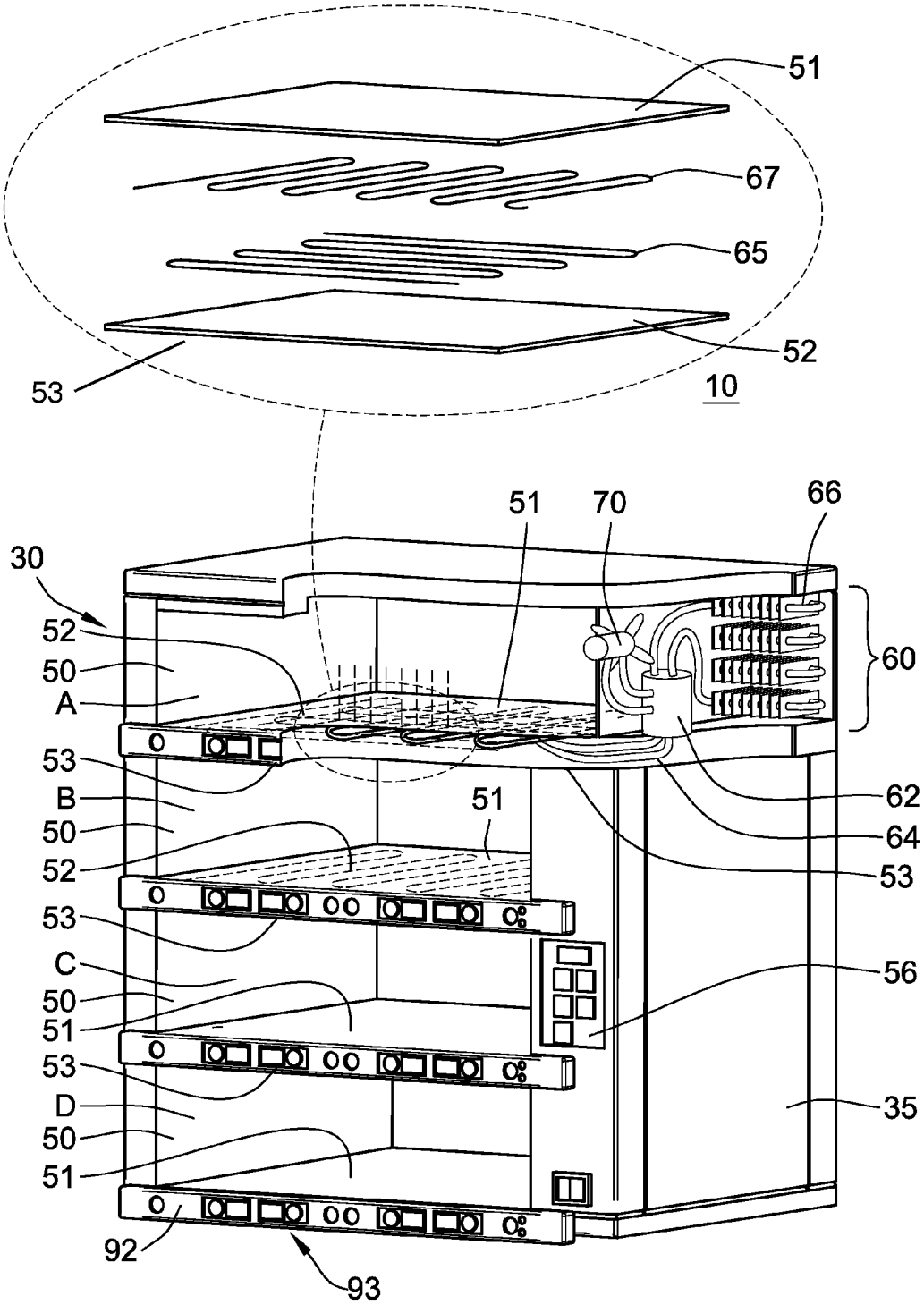
51
67
65
52
53
10
51
70
66
30
52
50
A
60
53
B
51
62
50
64
52
53
53
C
56
50
51
53
D
35
50
51
92
93

FIG. 2

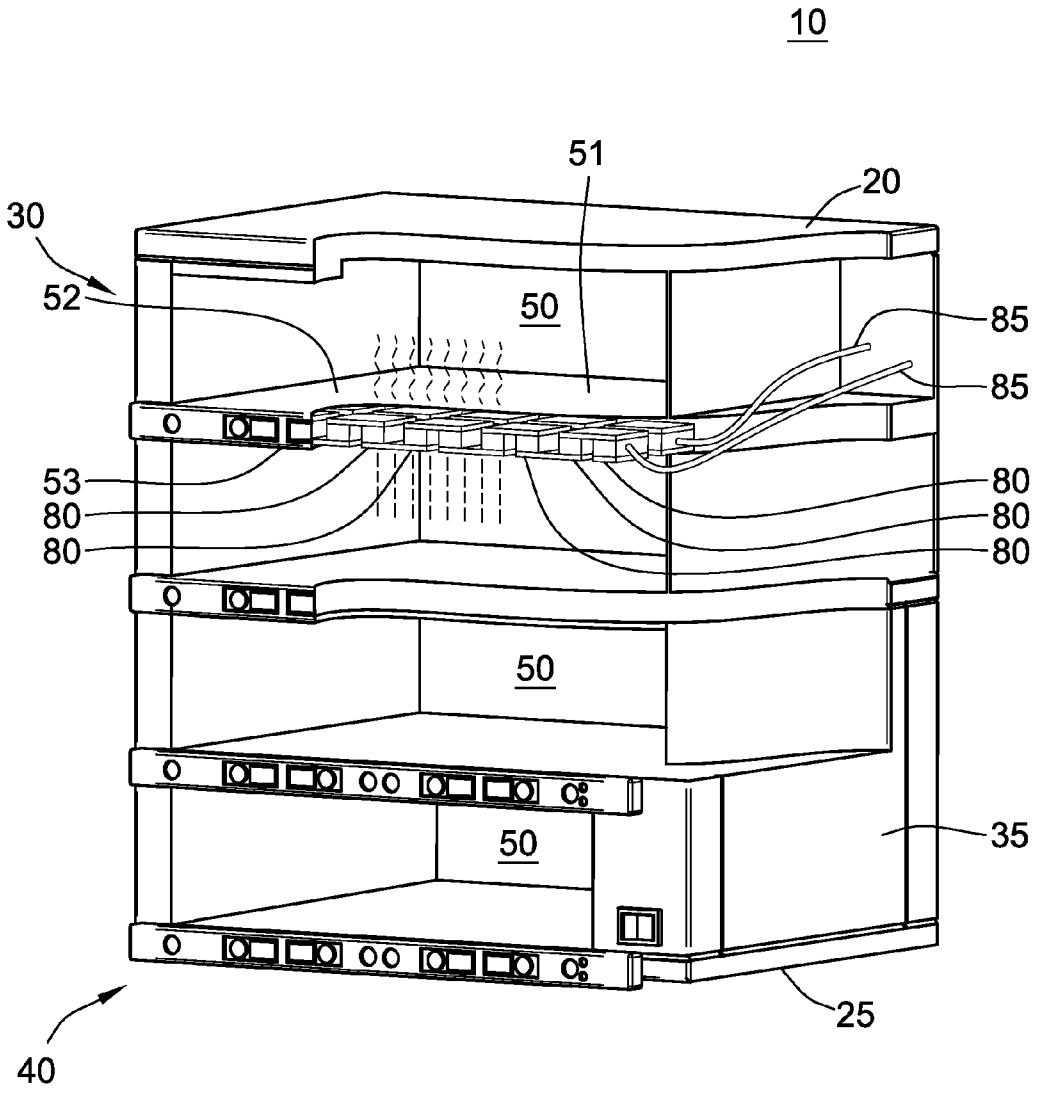

FIG. 3A

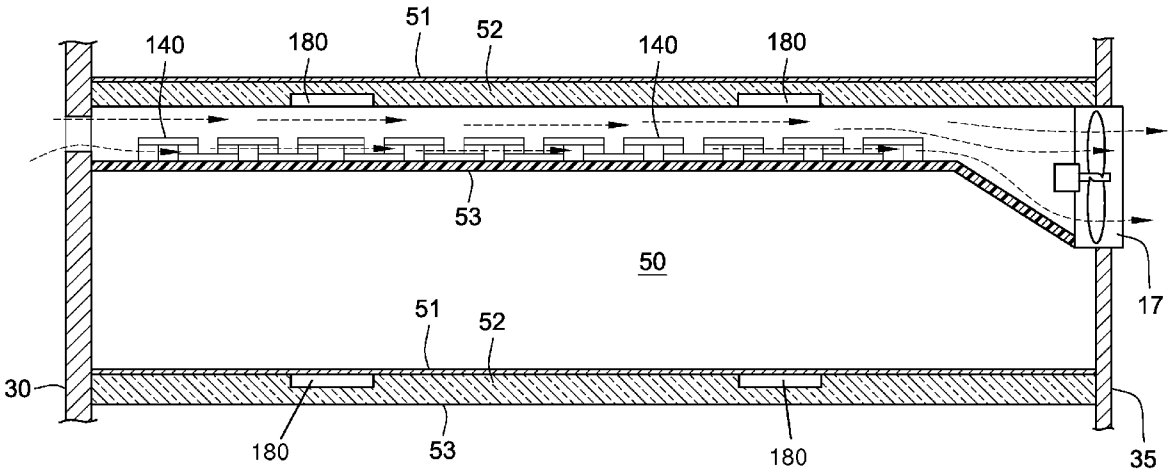

FIG. 3B

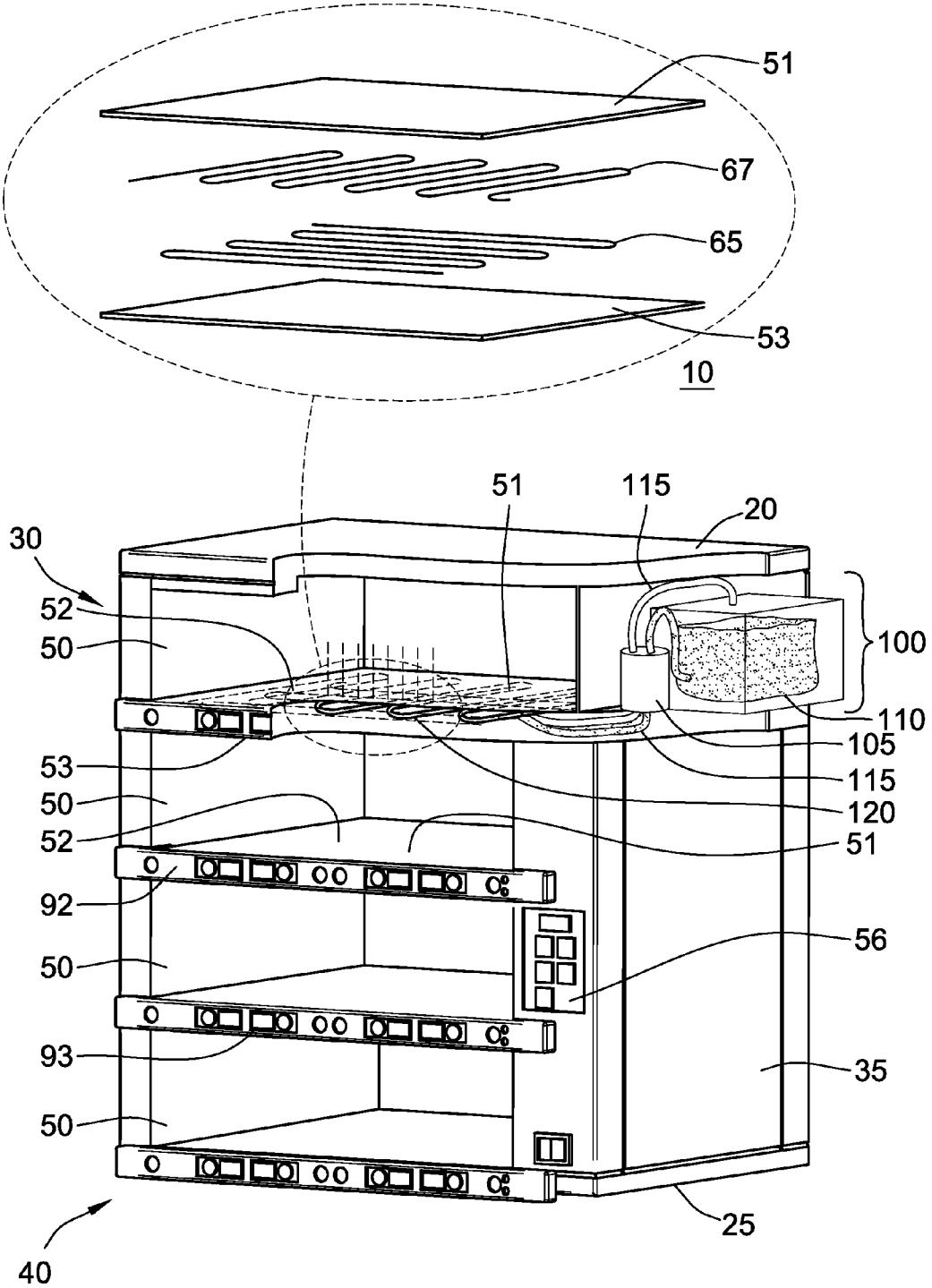
51
67
65
53
10
51
115
20
30
52
50
100
110
105
115
120
53
50
52
51
92
56
50
93
35
50
25
40

FIG. 4

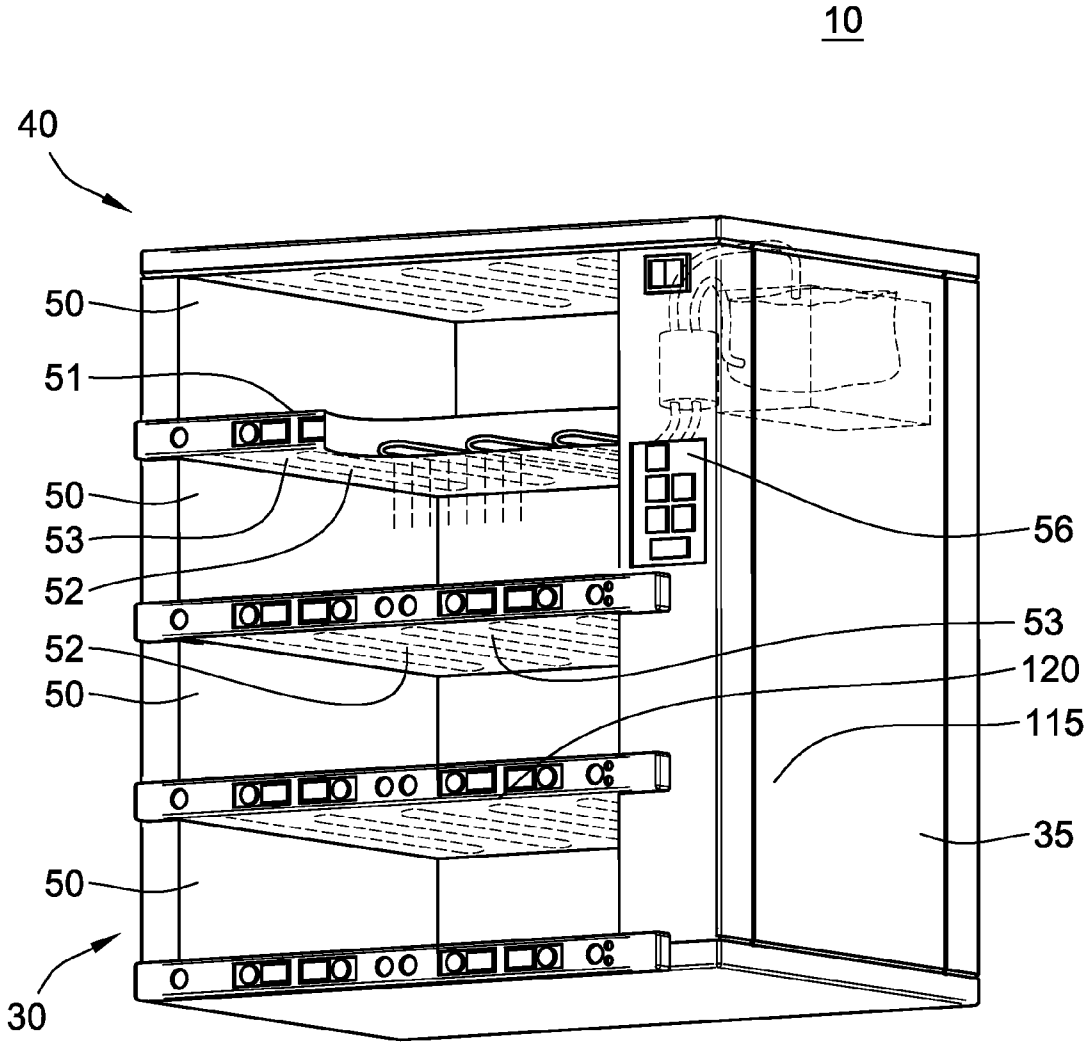

FIG. 5

POINT-OF-USE HOLDING CABINET

BACKGROUND

[0001] Many restaurants' success depends on how quickly customers can be served with food items that a customer orders and on the quality of the food when it is served. If the rate at which a restaurant prepares food products equals the rate at which those same food products are ordered and sold, a restaurant can theoretically have freshly-prepared foods ready to serve for customers as they arrive. Since it is not always possible to match food production with customer ordering rates, and since certain fast food restaurant customers expect to receive their ordered food items quickly, many fast food restaurants prepare various food items and keep them ready for sale until a customer arrives and purchases a pre-cooked food item.

[0002] Holding ovens to keep food warm are well known. Many such ovens allow a cooked food item to be put into the oven from one side of the oven and taken from the oven on the opposite side whereby food preparers add food to the oven and food servers take food from the oven.

[0003] While food holding ovens are well known and enable a restaurant service provider to keep food warm until served, a refrigerated food holding cabinet that provides the same or nearly the same functionality might enable a restaurant to keep prepared foods cold until they are ready for consumption. A refrigerated, point-of-use holding cabinet would therefore be an improvement over the prior art. Such a cabinet that can also optionally heat compartments would be an even greater improvement.

BRIEF DESCRIPTION OF THE DRAWINGS

[0004] FIG. **1** is a perspective view of refrigerated point-of-use holding cabinet;

[0005] FIG. **2** is a cutaway view of the point-of-use holding cabinet shown in FIG. **1**, but which can also provide heat to a compartment;

[0006] FIG. **3**A is a cutaway view of an alternate embodiment of a point-of-use holding cabinet having refrigerated and heated compartments;

[0007] FIG. **3**B is a cross-sectional view through one compartment of the cabinet shown in FIG. **3**A;

[0008] FIG. **4** is a cutaway view of an alternate embodiment of a refrigerated holding cabinet that also provides heated compartments;

[0009] FIG. **5** is another perspective view of an alternate embodiment of a refrigerated point-of-use holding cabinet.

DETAILED DESCRIPTION

[0010] FIG. **1** is a perspective view of a refrigerated point-of-use holding cabinet **10** having four separate food holding compartments **50**. In one embodiment of the cabinet **10**, all of the compartments **50** are refrigerated. In another embodiment, some compartments **50** are refrigerated while other compartments are heated. In yet another embodiment, one or more compartments can be selectively heated or refrigerated.

[0011] Cabinet embodiments that have both refrigerated and heated compartments are referred to herein as being dual-mode cabinets. Compartments **50** that can be optionally refrigerated or heated are referred to as dual-mode compartments.

[0012] Each embodiment of the cabinet **10** is comprised of a chassis **15**. The chassis **15** is comprised of a top panel **20**, a bottom panel **25**, left-side panel **30**, right side panel **35**, an open front face **40** and an open rear face **45**, which is not visible in FIG. **1**. The panels are preferably insulated to reduce heat transfer between the interior of the cabinet **10** and air surrounding the cabinet **10**.

[0013] As mentioned above, the cabinet **10** illustrated in FIG. **1** is sized, shaped and arranged to have four compartments **50**, however, the cabinet can have any number of temperature-controlled compartments, including a single compartment. For clarity, the four compartments **50** depicted in the figures are denominated using the letters A, B, C and D. The "A" compartment is the top or uppermost compartment; the "D" compartment is the bottom or lower-most compartment **50**.

[0014] Cabinet compartments **50** that are refrigerated use one or more of the heat-sinking devices described below. Compartments **50** that are heated use one or more heat-sources described below.

[0015] In FIG. **1**, the top or "A" compartment is defined by the left and right sidewalls **30** and **35**, the chassis top panel **20** and the first or upper-most shelf **52**. Compartment B is defined by the two sidewalls **30** and **35**, the shelf **52** for the "A" compartment and the second shelf **52**, which is for the "B" compartment. Compartment D is defined by the two sidewalls **30** and **35**, the third shelf, which is for the "C" compartment, and the chassis bottom **25**. In cabinet embodiments having only one compartment **50**, the single compartment is defined by opposing, left and right sidewalls **30** and **35**, a chassis top panel **20** and a chassis bottom panel **25**. For brevity, cabinet construction and operation is described with regard to a cabinet **10** having four compartments.

[0016] The shelves **52**, which define compartments, are planar or at least substantially planar and supported in the chassis **15** at their opposing side ends by the two chassis side walls **30** and **35**. Food items can be placed onto a shelf **52** and removed from a shelf through the open front face **40** or through the open rear face **45**. In one alternate embodiment, which is not shown but readily understood by those of ordinary skill, the rear face **45** is closed. Having a closed rear face **45** reduces heat transfer between the interior of the cabinet **10** and the ambient environment but at the cost of restricted access to the cabinet interior via the open front face **40**.

[0017] A face plate or bezel **92** is attached to each of the shelves **52** but can also be attached to the sidewalls **30** and **35** of the chassis **15**. In cabinet embodiments having only one compartment **50**, the bezel **92** is attached to either the top or bottom panels of the cabinet.

[0018] The bezels **92** provide information-bearing displays and user-controls, which are collectively identified by reference numeral **93**. The bezels **92** also cover heat-sinking devices and heat sources, described below, which are located "inside" the shelves **52**.

[0019] Displays and user-controls **93** are grouped together in the bezels **92** for corresponding compartments **50**. The displays and controls **93** provide a user interface to one or more controlling computers (not shown) for the cabinet. At least one computer (not shown) has a control panel **56** accessible at the front face **40**, through which commands can be sent to the computer and from which, operational information can be obtained by a user.

[0020] Cabinet control and control of the cabinet shelf temperature is effectuated in part by using one or more micro-controllers or microprocessors in combination with temperature sensors. The Applicant's co-pending patent application

entitled "Food Holding Cabinet Power Supplies with Downloadable Software," filed on Nov. 16, 2009 and having U.S. application Ser. No. 12/618,957 discloses among other things, apparatuses and methods by which compartments of a food holding cabinet can be controlled using microprocessors having downloadable software. Compartment temperature control is preferably effectuated using a semiconductor temperature sensor, thermally coupled to each shelf and electrically connected to a processor, such as those disclosed in the co-pending application Ser. No. 12/618,957.

[0021] A semiconductor apparatus and method for measuring temperature of a plate or shelf in a food holding cabinet is disclosed in the Applicant's co-pending patent application identified by U.S. patent application Ser. No. 12/759,760 filed on Apr. 14, 2010. That patent application is entitled "Temperature Sensor for a Food Holding Cabinet" and, the content of patent application Ser. No. 12/759,760 is incorporated by reference herein in its entirety,

[0022] FIG. **2** is a cutaway view of one embodiment of a point-of-use holding cabinet **10** and includes an inset figure showing in greater detail, a preferred structure for a shelf **52**. Referring to the inset, a preferred embodiment of the shelf **52** is comprised of two separate thermally conductive plates or sides **51** and **53**. The sides **51** and **53** are spaced apart from each other by a distance sufficient to accommodate the inclusion of at least one heat transfer device, between the plates **51** and **53** and which are depicted in the figures as separate boustrophedonic coils **65** and **67**, respectively.

[0023] A first thermally-conductive top plate or side of the shelf **52** is identified by reference numeral **51**. A second thermally-conductive bottom plate or side of the shelf **52** is identified by reference numeral **53**. The thermally-conductive plates **51** and **53** are preferably made of aluminum, between about one-eighth and about one-quarter inch-thick. Alternate embodiments of the shelf **52** use a thermally-conductive panel made of glass-ceramic or an ultra-low expansion glass for one or both of the plates **51** and/or **53**. Glass-ceramics and ultra-low expansion glass are considered herein to be "good" thermal conductors in that their conduction of heat energy is localized. Such materials also make excellent shelves for a heated, point-of-use food holding cabinet because they permit localized areas of a shelf to be heated to a first temperature, without having the entire shelf reach the same temperature.

[0024] Regardless of the material from which a shelf plate is made, a refrigeration coil **65** is "sandwiched" between the plates **51** and **53** and in thermal communication with at least one of them by virtue of the coil's mechanical attachment thereto. The coil **65** can be "mechanically" attached to a plate **51** or **53** by a thermally-conductive adhesive. The coil **65** can also be attached by brackets or clamps that are themselves attached to a plate by screws. One particular alternate embodiment of a shelf **52** is comprised of only one, thermally-conductive plate **51**, the smooth top surface of which "faces" into a compartment **50** space located above the plate **51**. The refrigeration coil **65** is nevertheless attached to and in thermal communication with the bottom surface of the one plate **51**. The coil **65** and the mechanism by which it is attached to a plate is left "exposed" to a second compartment **50** located below the plate **51**.

[0025] In another embodiment of the shelf **52**, an electrically-insulated, electrically-resistive heater wire **67** is also sandwiched between the plates **51** and **53** with a refrigeration coil **65**. In such an embodiment, the heater wire **67** can be located above, below or substantially co-planar with the refrigeration coil **65** but preferably in thermal communication with at least one of the plates **51** and **53** such that when the wire **67** temperature rises due to an electric current flow, it provides heat energy into the plates **51** and/or **53**, to which the wire **67** is thermally coupled to. Those of ordinary skill will recognize that thermally insulating the heater wire **67** from one of the plates, **51** or **53** and thermally insulating the refrigeration coil **65** from the other plate **53** or **51**, enables the wire **67** to provide heat energy into one plate **53** or **51**, while the refrigeration coil **65** sandwiched between the same two plates absorbs heat from the other plate **51** or **53**. Conversely, thermally coupling the heater wire **67** and the refrigeration coil **65** to the same plate **51** or **53**, or coupling them to both plates **51** and **53**, enables the corresponding plate or plates to be heated or cooled by the selective actuation of either a refrigeration system for the evaporator coil **65**, or a power supply for the wire **67**.

[0026] The cabinet embodiment shown in FIG. **2** uses one or more conventional, liquid phase/vapor phase refrigeration systems **60** connected to the evaporator coil **65** inside a shelf **52**. Such systems **60** are also known to those of ordinary skill in the art as a "gas refrigeration cycle" and/or a "reversed Brayton cycle." They are comprised of a gas compressor **62**, an evaporator **65**, refrigerant lines **64**, a fan **70**, a pressurized refrigerant gas working fluid, and a condenser coil **66**. Providing a separate system **60** in the cabinet **10** for each shelf **52**, enables corresponding shelves **52** to be maintained at different refrigerated temperatures, i.e., it provides or facilitates individual shelf temperatures. In an alternate embodiment, a single system **60** refrigerates coils **65** fop all shelves **52** in a cabinet. In such an embodiment, temperatures of different shelves can be optionally (or alternatively) "controlled" individually by the addition of heat to a shelf, from a shelf-embedded heater wire **67**.

[0027] For purposes of clarity, the evaporator coil **65** is considered to be a heat-sinking device in that it removes or "sinks" heat from compartments **50** in the cabinet **10**. The working fluid that flows through the evaporator coil **65** also removes or sinks heat from evaporator coil **65** and as a result, from the compartments **50** as well. The working fluid is thus also considered to be a heat-sinking device. The entire gas refrigeration system **60** can also be considered as a structure or device that removes or sinks heat from compartments **50** in the sense that the gas refrigeration system **60** would not be functional without the various components that make up such a system.

[0028] Those of ordinary skill will appreciate that a refrigerated compartment **50** is one that can have a refrigerated shelf **52** above, below or both above and below the compartment space albeit with the preferred location of the refrigerated shelf **52** being at the top of a compartment, as shown in FIG. **5**. Depending in part on the refrigerated shelf location in a refrigerated compartment, heat energy from a food product within a compartment **50** will be conducted, radiated and/or carried by convection, into thermally-conductive shelf surfaces embodied by the aforementioned shelf plates **51** and **53**. Regardless of where a refrigerated surface is located in a compartment, heat energy in a shelf plate **51** and/or **53**, is eventually transferred into the coil **65**. Heat absorbed by refrigerant flowing through the coil **65** is eventually transferred to the air from the condenser **66**.

[0029] A heated compartment **50** can have a heated shelf above, below or above and below a compartment space. Heat

energy from a heater wire **67** in a shelf is transferred into one or both of the thermally-conductive shelf plates **51** and **53**. As the shelf plates' temperature rises, heat energy is of course transferred into the corresponding, adjacent compartment **50** as well as anything stored therein.

[0030] The liquid phase/vapor phase refrigeration system **60** shown in FIG. **2** is just one way to refrigerate a compartment **50** of the cabinet **10**. An alternate embodiment of a shelf and an alternate embodiment of a cabinet use the thermoelectric effect provided by one or more Peltier devices **80** to cool and/or heat one or more components of one or more compartments **50**.

[0031] The thermoelectric effect is a well-known direct conversion of a temperature difference into an electric voltage and vice versa. When a voltage is applied to a thermoelectric device, a temperature difference is created across the two sides of the device. The temperature difference created in response to an applied voltage is known as the Peltier effect. Devices that produce temperature differences in response to an applied voltage are considered herein to be Peltier devices. A Peltier device **80** is therefore considered herein to be a heat-sinking device, however, a Peltier device **80** can also be a heat source.

[0032] Peltier devices have a "cold" side and a "hot" side. The cold side absorbs heat whereas the hot side emits heat. Heat emitted from the hot side includes at least some of the heat absorbed from the cold side. Dissipating heat from the hot side thus facilitates heat absorption by the cold side. A Peltier device **80** is therefore considered herein to be a solid-state heat pump or heat-sinking device.

[0033] FIG. **3**A is a cutaway view of another embodiment of a point-of-use holding cabinet using Peltier devices to absorb heat from compartments **50**. In a preferred embodiment, one or more Peltier devices **80** are "sandwiched" between, and in thermal communication with shelf plates **51** and/or **53** described above. Electrical energy is provided to the Peltier devices **80** through wires **85**, under the control of the aforementioned control computer.

[0034] The polarity of the voltage provided to a Peltier device determines which side of the device **80** is "cold," In one embodiment of the cabinet shown in FIG. **3**, the hot sides of all the Peltier devices **80** are oriented toward, and thermally-coupled to, one compartment, such as the "A" compartment, (See FIG. **1**). The cold sides of the same Peltier devices **80** are oriented toward, and thermally-coupled to, the lower or "B" compartment. (See FIG. **1**) Peltier devices **80** sandwiched "inside" the shelf **52** thus sink, i.e., absorb, heat energy from the B compartment while simultaneously adding heat energy to the A compartment.

[0035] "Sandwiching" the Peltier devices in a shelf **52** comprised of two plates **51** and **53** as shown in FIG. **3** provides a shelf **52** cold on one side and hot on the other. Such a shelf **52** structure thus enables a dual-mode refrigerated point-of-us holding cabinet **10** having a "first" compartment **50** that is warm and a vertically adjacent "second" compartment **50** that is cold.

[0036] As mentioned above, the opposite sides of a Peltier device are hot or cold depending on the polarity of the voltage provided to the device. Designating one compartment as cold and an adjacent compartment as hot is therefore a design choice because the thermal orientation of the Peltier device can be reversed simply by changing the polarity of the voltage provided to the Peltier device.

[0037] Temperature control of a thermoelectric, Peltier device **80** is typically accomplished by controlling the electric energy provided to the device. Temperature control of one side of the Peltier device **80** can also be effectuated by controlling heat transferred into or out of the opposite side of the device, as described in the applicant's co-pending application Ser. No. 12/478,480 filed Jun. 4, 2009, the disclosure of which is entitled Thermo Electric Cooler.

[0038] The contents of application Ser. No. 12/478,480 are incorporated herein by reference, and as described therein, Peltier device cold side temperature control is effectuated in one embodiment of a cabinet **10** by controlling the hot side heat dissipation. Hot side heat dissipation is controlled in the cabinet **10**, in part by exhaust fans **17**, which are themselves controlled by the aforementioned cabinet controllers.

[0039] In another embodiment of a point-of-use holding cabinet, multiple Peltier devices **80** are mounted between shelf plates **51** and **53** but have only their cold sides thermally coupled to one of the two opposing plates **51** and **53**. Air is then moved through the inter-plate space to cool the hot sides of the Peltier devices therein.

[0040] FIG. **3**B is a cross-sectional view through one compartment of an alternate embodiment shelf **52** used in the aforementioned embodiment of a food storage cabinet. As can be seen in FIG. **3**B, the Peltier devices' **80** cold sides are thermally coupled to the bottom or lower plate **53** of a shelf **52**. Heat is absorbed by the Peltier devices **80** cold sides, which cause the temperature of the associated plate **53** to decrease. As the plate **53** temperature decreases, heat is absorbed into the plate **53** and thermally conducted into the Peltier devices **80**. Heat energy from the hot sides of the Peltier devices is subsequently conducted, radiated and/or carried by convection, into air drawn through the inter-plate space by a fan **17** mounted into the side **35** of the cabinet. A Peltier device **80** and the plate **53** chilled by one or more such devices are both considered herein to be heat-sinking devices.

[0041] Temperature control of the cabinet compartments that are refrigerated by using Peltier devices can be accomplished using the methodology disclosed in the Applicant's co-pending application Ser. No. 12/478,480 and by the cabinet exhaust fans **17** depicted in FIG. **1** and FIG. **3**B, which move air through the inter-plate space, i.e., the space between the plates **51** and **53**. Moving relatively cool room air over the Peltier devices' hot sides thus enables temperature control of the cold sides, but it also enables an alternate embodiment of the cabinet wherein two or more vertically-adjacent compartments **50** can be kept cool or cold using only Peltier devices as heat-sinking devices, within the shelves **52**, such as the shelf **52** shown in FIG. **2**B.

[0042] FIG. **4** is a cutaway view of yet another alternate embodiment of a holding cabinet **10**. The cabinet in FIG. **4** effectuates refrigeration of one or more compartments **50** using a chilled or refrigerated, circulating liquid such as oil or glycol that is pumped through one or more thermally-conductive coils **120** sandwiched inside one or more shelves **52** and which are thermally coupled to one or both of the plates **51** and **53**. Unlike a liquid-phase/vapor-phase refrigeration system that uses a working fluid, such as R-**134** and the like, which changes phase as it circulates, and, the selective routing to different evaporators is problematic, the system of FIG. **4** uses a chilled liquid that does not change phase and which is moved through the heat-exchanging coil **120** and connecting conduit tubes by a pump; the pressure on the liquid is therefore much lower than the working pressures required in

a liquid-phase/vapor-phase refrigeration system, typically a few pounds per square inch or only an amount sufficient to overcome head losses.

[0043] As with the shelf described above with regard to FIG. **2**, an alternate embodiment of the shelf **52** used with the cabinet of FIG. **4** uses a single plate **51** with the heat-exchanging coil **120** attached to the lower or bottom surface of the single plate **51** such that the coil **120** is thermally-coupled to the one plate **51** and exposed to a compartment below the single plate **51**. In both shelf embodiments, i.e., one and two-plate shelves, the thermally-conductive coil **120** is considered to be a heat-sinking device as is the chilled liquid it carries.

[0044] Using a chilled liquid as a heat-sinking "device" enables the cabinet **10** to controllably and selectively refrigerate compartments **50** simply by routing the chilled liquid through various different coils **120** that are thermally coupled to various different plates **51** and/or **53** that comprise different shelves **52** in various different compartments **50**. Using a chilled liquid also facilitates a selective heating of the same compartments by heating the liquid instead of refrigerating it. And, as depicted in the inset of FIG. **4**, a heating coil **67** sandwiched between two plates **51** and **53** with the cooling coil **120** enables such shelves to selectively heat or cool compartments above and/or below the shelf, depending on which "side" of the shelf the heated wire **67** is thermally coupled to as well as the temperature of the liquid flowing through the "sandwiched" coil **120**.

[0045] In FIG. **4**, a working liquid such as oil or glycol is refrigerated in a small tank **110** mounted to one side of the stack of compartments A-D but within the chassis **15**. The liquid can be chilled by a conventional liquid-phase/vapor-phase refrigeration system, such as the system **60** described above. A pump **105** circulates the working fluid between the tank **110** and coil **120** through flexible pipes or tubes **115**. Heating the working fluid inside the tank **110** instead of refrigerating it also enables the re-circulating liquid to be alternately used to heat the shelves **52**. A working fluid, such as the aforementioned oil or glycol, is considered to be "chilled" or "refrigerated" when its temperature entering a cooling coil **120** is at least twenty (**20**) degrees Fahrenheit (F) below ambient temperature. By way of example, if the ambient temperature of a room where a cabinet **10** is used is seventy degrees Fahrenheit, the liquid entering a cooling coil **120** is "chilled" or "refrigerated" if its temperature is fifty degrees Fahrenheit or less.

[0046] FIG. **5** is another perspective view of the refrigerated point-of-use holding cabinet and shows primarily the preferred location for cooling coils and/or refrigerated shelves in each embodiment, which is at the top of each compartment **50** where warmer air in the compartment aggregates.

[0047] As used herein, the term heat-sinking device includes the aforementioned cooling coils, regardless of the type of working fluid therein. A heat-sinking device also includes devices and the ancillary equipment attached to, and used with the cooling coils. Peltier devices are also considered to be heat sinking devices. Heat-sinking devices also include Peltier devices.

[0048] Heat sources include the electrically-resistive heating elements, heated coils and devices and ancillary equipment that provide heat to a working fluid. As described above, Peltier devices are also considered to be heat sources.

[0049] Heat sinking devices and heat sources are considered herein to be more generally referred to as heat transfer devices.

[0050] The heat transfer devices disclosed herein are thermally coupled to the shelf **52**, preferably by way of mechanical attachment to at least one of the plates **51** and **53**. Mechanical attachment and the resultant thermal coupling is preferably accomplished by a thermally-conducive adhesive, however, clamps that are attached to a plate by screws driven into a plate can also be used.

[0051] The shelves are mechanically coupled to the side panels **30** and **35**. The side panels are also preferably made from thermally-conductive material such as aluminum. Thermally coupling a heat transfer device to a one or more plates that comprise a shelf therefore also thermally couples the heat transfer device to the side walls and thus to the compartment. Heat transfer devices coupled to a shelf are therefore also thermally coupled to the corresponding compartment.

[0052] While the temperature of a Peltier device can be controlled by controlling the heat dissipated from the hot side and/or the heat absorbed into the cold side, cabinet embodiments disclosed herein preferably control compartment temperature using one or more semiconductor temperature sensors, thermally coupled to one or more of the thermally-conductive structures that comprise a compartment. Cabinet embodiments disclosed herein preferably use a semiconductor temperature sensor **180** that is directly coupled and therefore thermally coupled to the refrigerated and/or heated surfaces **51** and/or **53** of the shelves **52**. FIG. **3**B, which is a cross-sectional view through one compartment of the cabinet shown in FIG. **3**A, depicts a first, semiconductor temperature sensor **180** attached to the lower side **53** of the "upper" shelf **52** and second, semiconductor temperature sensor **180** attached to the upper side **51** of the "lower" shelf **52**.

[0053] Semiconductor temperature sensors **180** used in preferred embodiments disclosed herein are disclosed in the applicant's co-pending patent application Ser. No. 12/759760, filed Apr. 14, 2010 and which is entitled "Temperature Sensor for a Food Holding Cabinet." The contents of that application are incorporated by reference herein in its entirety especially the teachings of the structure and use of a semiconductor temperature sensor.

[0054] The foregoing description is for purposes of illustration only and not for purposes of limitation. The true scope of the invention is set forth by the appurtenant claims.

What is claimed is:

1. A point-of-use, food holding cabinet (food holding cabinet) comprised of:

a chassis;

a first thermally-conductive, food holding compartment (first compartment) within the chassis; and

a heat-sinking device, thermally coupled to the first compartment.

2. The food holding cabinet of claim **1**, wherein the first compartment is comprised of a first, thermally-conductive plate and wherein the heat-sinking device is thermally coupled to the first plate.

3. The food holding cabinet of claim **2**, wherein the first compartment is further comprised of:

a second thermally-conductive plate, the first and second plates being separated from each other by a first distance; and

wherein the heat-sinking device is thermally coupled to at least one of the first and second plates.

4. The food holding cabinet of claim **1**, wherein the heat-sinking device is a comprised of:

a coil of a liquid-phase/vapor-phase, refrigeration system.

5. The food holding cabinet of claim **1**, wherein the heat-sinking device is comprised of:

a vapor-phase/liquid-phase refrigeration system.

6. The food holding cabinet of claim **3**, wherein the shelf is further comprised of:

a heat source, thermally coupled to at least one of the first and second plates.

7. The food holding cabinet of claim **6**, wherein the heat source is an electrically-resistive wire.

8. The food holding cabinet of claim **2**, wherein the first, thermally-conductive plate is comprised of a glass-ceramic.

9. The food holding cabinet of claim **2**, wherein the first, thermally-conductive plate is comprised of ultra-low expansion glass.

10. The food holding cabinet of claim **2**, wherein the heat-sinking device is comprised of:

a Peltier device having a cold side and a hot side, the cold side being thermally coupled to the first, thermally-conductive plate.

11. The food holding cabinet of claim **3**, wherein the heat-sinking device is comprised of:

a Peltier device having a cold side and a hot side, the cold side being thermally coupled to the first plate.

12. The food holding cabinet of claim **11**, wherein the hot side of the Peltier device is thermally-coupled to the second plate and wherein the cabinet is further comprised of a second thermally-conductive food holding compartment adjacent to the first compartment in the cabinet, heat energy from the first compartment being absorbed into the cold side of the Peltier device, heat energy from the hot side of the Peltier device being transferred into the second compartment.

13. The food holding cabinet of claim **11**, further comprised of a fan configured to drive air from outside the cabinet, through space between the first and second plates defined by the first distance separating the first and second plates.

14. The food holding cabinet of claim **2**, wherein the heat-sinking device is a comprised of a refrigerated liquid.

15. The food holding cabinet of claim **3**, wherein the heat sinking device is comprised of a refrigerated liquid and a coil, thermally coupled to at least one of the first and second plates.

16. The food holding compartment of claim **15**, wherein the shelf is further comprised of a heat source, thermally coupled to at least one of the first and second plates.

17. The food holding compartment of claim **16**, wherein the heat source is at least one of:

a heated liquid; and

an electrically-resistive wire.

18. The food holding cabinet of claim **1**, wherein the chassis is comprised of an open front face and a closed rear face.

19. The food holding cabinet of claim **1**, further comprising:

a semiconductor temperature sensor (temperature sensor) within the chassis and operatively coupled to a controller for the heat-sinking device.

20. The food holding cabinet of claim **19**, wherein the temperature sensor is thermally coupled to the first compartment.

21. A refrigerated food holding cabinet comprising:

a chassis;

a first thermally-conductive, food holding compartment (first compartment) within the chassis;

a heat sinking device, thermally coupled to the first compartment;

a computer controlled power supply for the heat sinking device, the power supply being comprised of:

a first computer (first computer), which executes program instructions stored in a memory device;

a first memory device coupled to the first computer and storing executable program instructions for the first computer therein;

an electrical power control device coupled to:

an electric power source;

the first computer; and

the heat-sinking device;

the electrical power control device controlling electric power delivered to the heat sinking device from the electrical power source in response to at least one signal received from the first computer; and

a second computer operatively coupled to the first computer, the second computer being capable of obtaining of providing to the first computer as a download, at least one of:

data; and

executable program instructions for the first computer.

22. A point-of-use food holding cabinet comprised of:

a chassis;

first and second food-holding compartments (compartments) within the chassis; and

a heat sinking device thermally coupled to, and transferring heat energy from at least one of the first and second compartments.

23. The point-of-use food holding cabinet of claim **22**, further including:

a semiconductor temperature sensor thermally coupled to at least one of the first and second compartments and, operatively coupled to a controller for the heat sinking device.

24. The point-of-use food holding cabinet of claim **22**, wherein said compartments are defined by a shelf between the first and second compartments, the shelf having first and second thermally-conductive and substantially planar sides, wherein the first compartment is below the first side of the first shelf and wherein the second compartment is above the second side of the first shelf, wherein the heat sinking device sinks heat energy from the first side of the shelf and transmit heat energy into the second side of the shelf.

25. The food holding cabinet of claim **22**, wherein the heat sinking device is a Peltier device.

26. The food holding cabinet of claim **22**, wherein the heat sinking device is a vapor-phase/liquid-phase refrigeration system.

27. The food holding cabinet of claim **22**, wherein the heat sinking device is a refrigerated liquid.

28. The food holding cabinet of claim **22**, further comprised of a heat source, thermally coupled to the one of the first and second compartments, not thermally coupled to the heat sinking device.

29. The food holding cabinet of claim **22**, wherein the chassis is comprised of an open front face and a closed rear face.

* * * * *