US009178194B2

(12) **United States Patent**
Park et al.

(10) **Patent No.: US 9,178,194 B2**
(45) **Date of Patent: Nov. 3, 2015**

(54) **BATTERY PACK HAVING A COVER WITH AT LEAST ONE CUT PORTION FORMED THEREIN**

(75) Inventors: **Kyungho Park**, Yongin-si (KR); **Seok Koh**, Yongin-si (KR); **Kyungwon Seo**, Yongin-si (KR)

(73) Assignee: **Samsung SDI Co., Ltd.**, Gyeonggi-do (KR)

(*) Notice: Subject to any disclaimer, the term of this patent is extended or adjusted under 35 U.S.C. 154(b) by 1164 days.

(21) Appl. No.: **12/183,364**

(22) Filed: **Jul. 31, 2008**

(65) **Prior Publication Data**

US 2009/0111018 A1 Apr. 30, 2009

(30) **Foreign Application Priority Data**

Oct. 30, 2007 (KR) 10-2007-109725

(51) **Int. Cl.**
H01M 2/02 (2006.01)
H01M 2/10 (2006.01)

(52) **U.S. Cl.**
CPC ***H01M 2/1061*** (2013.01); ***H01M 2/02*** (2013.01); ***H01M 2/0207*** (2013.01); ***H01M 2/1016*** (2013.01)

(58) **Field of Classification Search**
CPC H01M 2/02; H01M 2/1016
See application file for complete search history.

(56) **References Cited**

U.S. PATENT DOCUMENTS

6,887,616	B2 *	5/2005	Kim et al.	429/94
2002/0182480	A1 *	12/2002	Hanauer et al.	429/62
2003/0077486	A1 *	4/2003	Iwaizono et al.	429/7
2004/0029000	A1	2/2004	Morita et al.	
2004/0115527	A1 *	6/2004	Hiratsuka et al.	429/176
2005/0031952	A1 *	2/2005	Hayashi et al.	429/185
2005/0084749	A1 *	4/2005	Hwang et al.	429/127
2006/0032667	A1 *	2/2006	Sato	174/260
2006/0166089	A1 *	7/2006	Suzuki et al.	429/185
2006/0199075	A1 *	9/2006	Moon et al.	429/176

(Continued)

FOREIGN PATENT DOCUMENTS

EP	1 648 043	4/2006
EP	1 717 882 A1	11/2006

(Continued)

OTHER PUBLICATIONS

European Examination Report dated Dec. 28, 2009 for European Patent Application No. EP 08 167 096.0 which shares priority of Korean Patent Application KR 10-2007-109725 with captioned U.S. Appl. No. 12/183,364.

(Continued)

Primary Examiner — Maria J Laios
(74) *Attorney, Agent, or Firm* — Knobbe Martens Olson & Bear LLP

(57) **ABSTRACT**

A battery pack to improve assembling reliability in a battery with a cover frame. The battery pack according to the present invention includes a rechargeable battery having at least one rounded lateral side; a cover frame including a frame surrounding each of lateral sides of the rechargeable battery, wherein more than at least one groove is formed at both ends of the frame covering the rounded lateral side of the rechargeable battery. Therefore, it is possible to couple the cover frame to the rechargeable battery via the groove without deforming the cover frame. Also, the rounded battery and the rounded cover frame closing each other is an effect that assembly error of a battery to cover frame can be reduced.

21 Claims, 6 Drawing Sheets

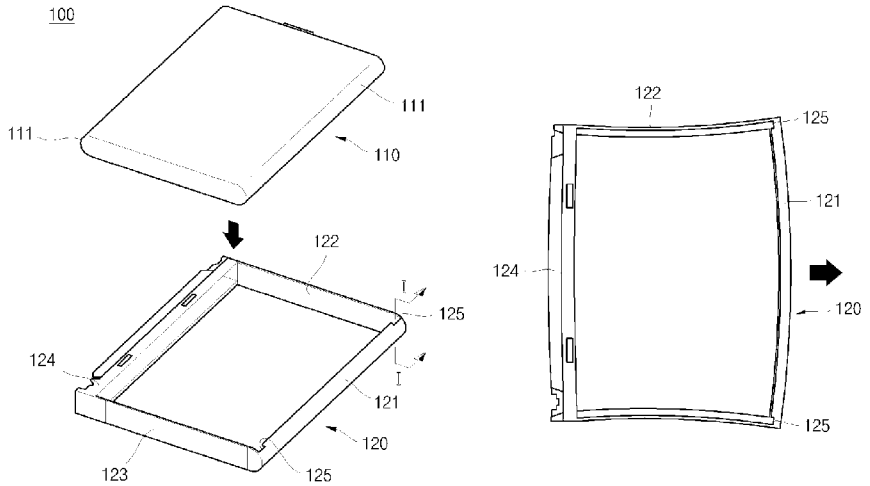

Zhuhai CosMX Battery Co. EX1015
Zhuhai CosMX Battery Co. v. Ningde Amperex Tech. Ltd.

(56) **References Cited**

U.S. PATENT DOCUMENTS

2006/0244416	A1	11/2006	Yong et al.	
2006/0266542	A1 *	11/2006	Yoon	174/112
2007/0154799	A1 *	7/2007	Yoon et al.	429/176

FOREIGN PATENT DOCUMENTS

JP	2004-063383		2/2004
JP	2004-273174		9/2004
JP	2005-100689	A	4/2005
JP	2005-100696		4/2005
JP	2005-190891		7/2005
JP	2005-190956	A	7/2005
JP	2005-327477		11/2005
JP	2006-164601	A	6/2006
KR	10-2006-0105208		10/2006

OTHER PUBLICATIONS

Japanese Notice of Allowance dated Jul. 3, 2012 for Japanese Patent Application No. JP 2008-269200 which shares priority of Korean Patent Application No. KR 10-2007-0109725 with captioned U.S. Appl. No. 12/183,364.

* cited by examiner

FIG. 1A

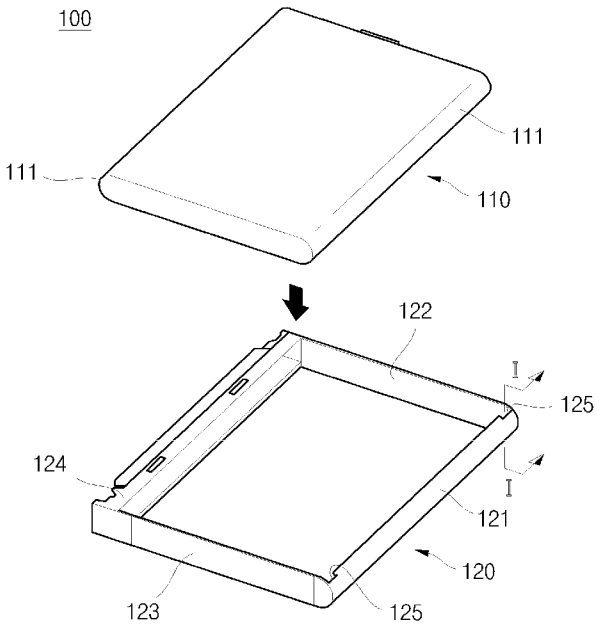
100
111
111
110
122
I
125
124
I
121
120
123
125

FIG. 1B

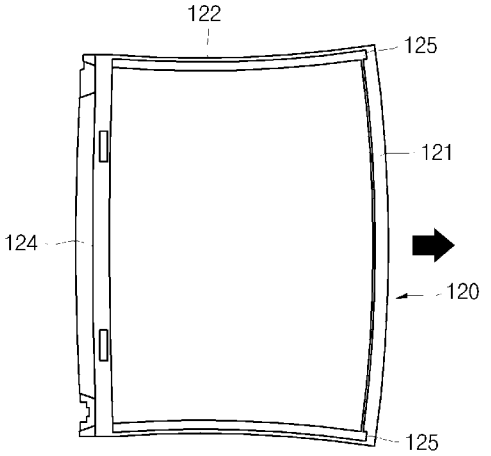
122
125
121
124
120
125

FIG. 1C

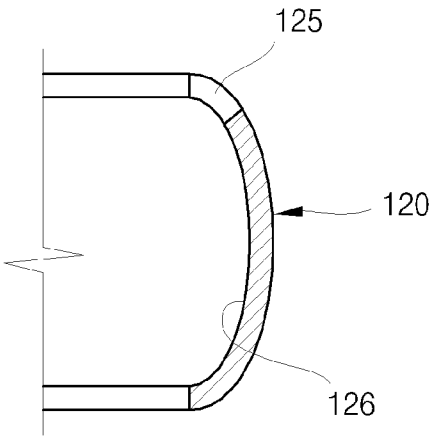

FIG. 1D

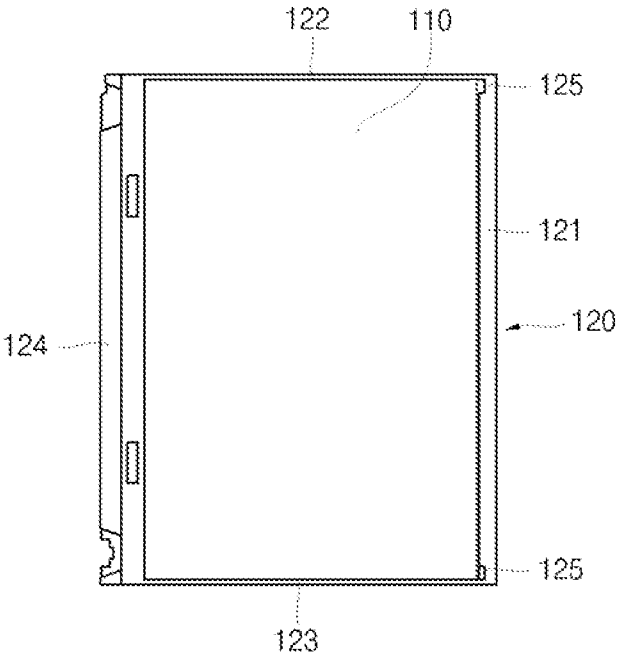

FIG. 2

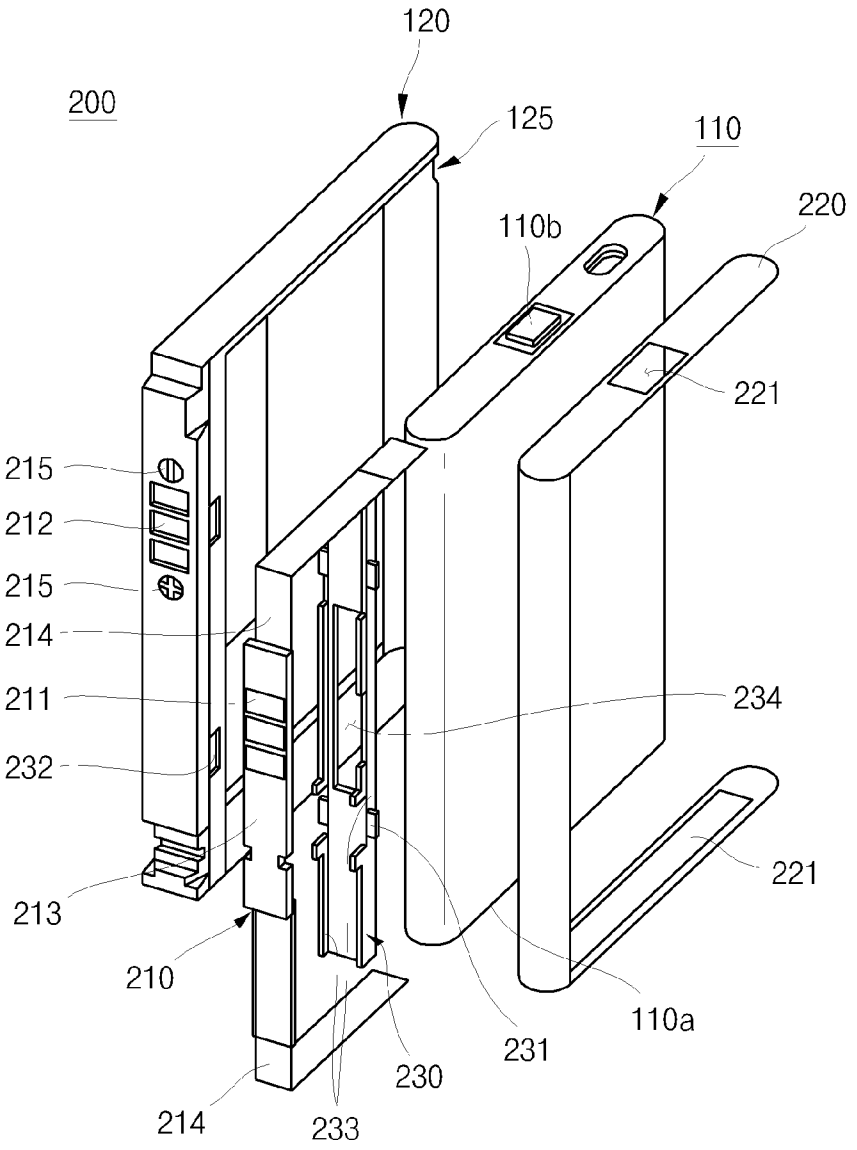
120
200
125
110
220
110b
221
215
212
215
214
211
234
232
221
213
210
110a
231
230
214
233

FIG. 3

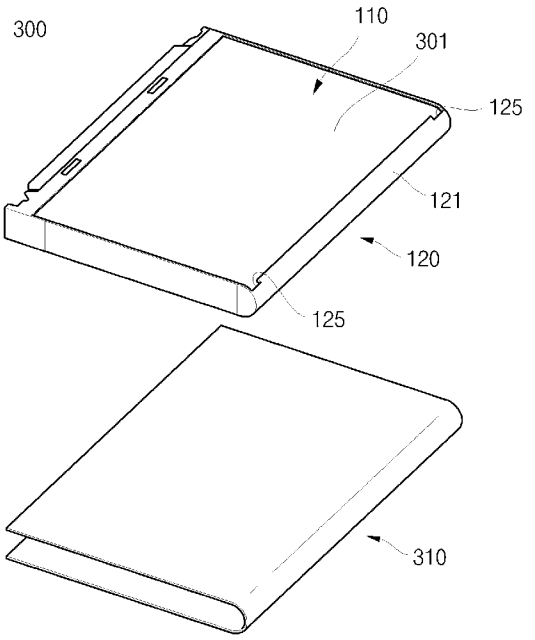
300
110
301
125
121
120
125
310

FIG. 4A

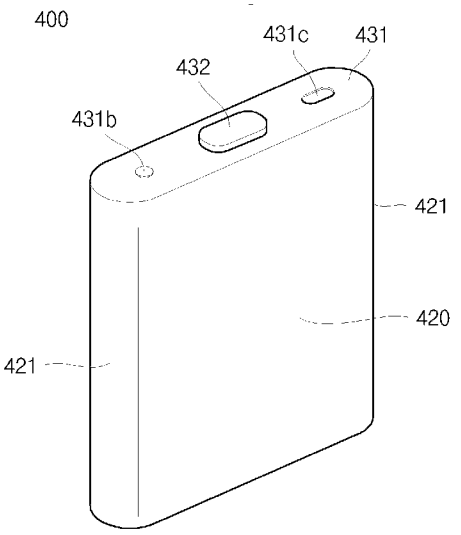
400
431c
431
432
431b
421
420
421

FIG. 4B

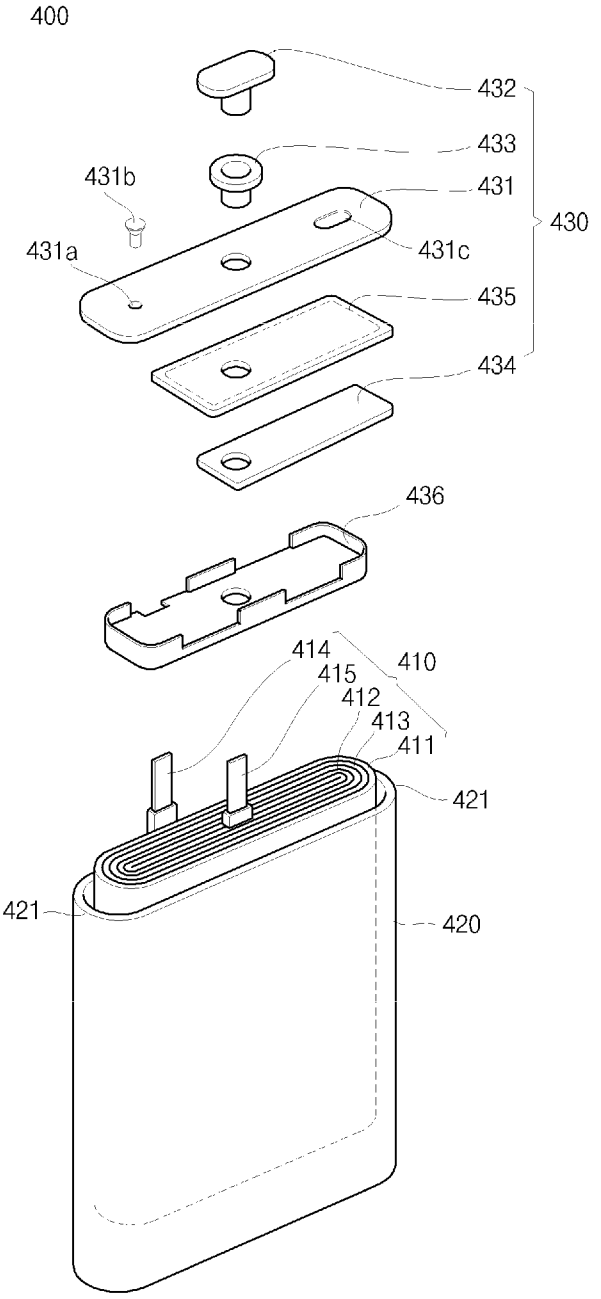
400
432
433
431b
431
430
431a
431c
435
434
436
414
410
415
412
413
411
421
421
420

FIG. 5A

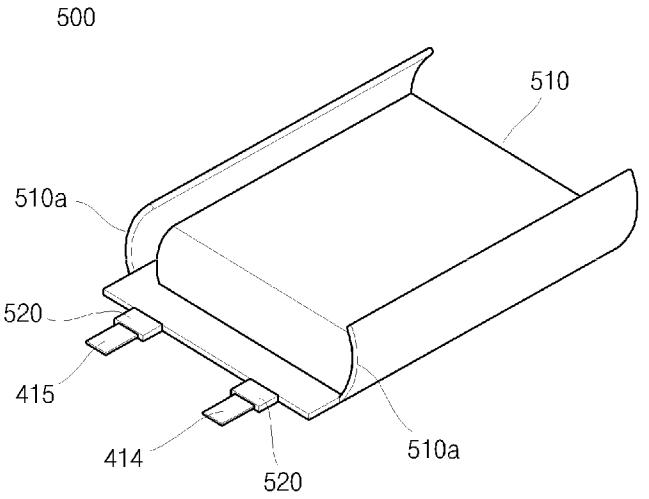
500
510
510a
520
415
414
520
510a

FIG. 5B

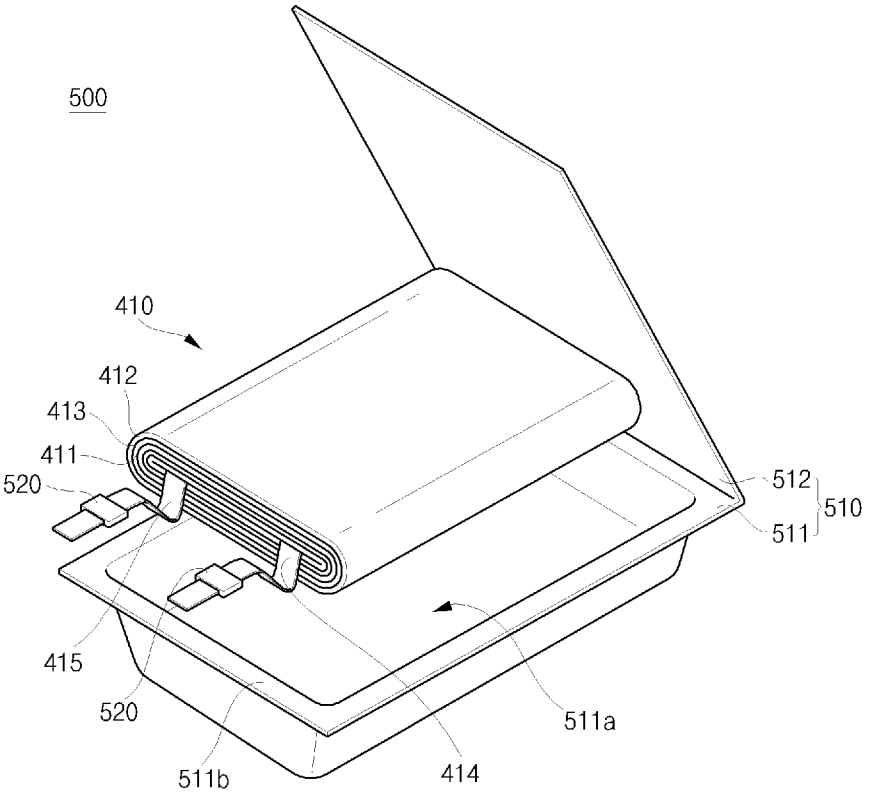
500
410
412
413
411
520
512
510
511
415
520
511a
511b
414

BATTERY PACK HAVING A COVER WITH AT LEAST ONE CUT PORTION FORMED THEREIN

CROSS-REFERENCE TO RELATED APPLICATIONS

This application claims priority to and the benefit of Korean Patent Application No. 2007-109725 filed in the Korean Intellectual Property Office on Oct. 30, 2007, the disclosure of which is incorporated herein by reference.

BACKGROUND OF THE INVENTION

1. Field of the Invention

Aspects of the present invention relates to a secondary battery and, more particularly to a structure of a battery pack for coupling a secondary battery.

2. Description of the Related Art

Recently, compact, light-weight and portable electronic devices, such as cellular phones, notebook computers, camcorders, and the like, are being developed and produced briskly. These portable electronic devices include a battery pack so that the devices can be operated even where additional power sources are not provided. Currently, the battery pack employs a secondary battery in which charging/discharging can be executed when taking the economic aspects into consideration. A Ni—Cd battery, a Ni-MH battery, a Li battery and a Li-ion secondary battery are examples of typical secondary batteries. The operation voltage of the Li-ion secondary battery is approximately three times higher than those of the Ni—Cd battery and the Ni-MH battery, which are widely used as the power sources of the portable electronic devices. In addition, Li-ion secondary batteries are widely used since the energy density per unit weight for Li-ion secondary batteries is very high.

The secondary battery usually employs a Li-based oxide as positive electrode active material and a carbonic material as negative electrode active material. Generally, the secondary battery is classified into a liquid electrolyte battery and a high-polymer electrolyte battery according to the kind of electrolyte. A battery using the liquid electrolyte is called a lithium ion battery, and a battery using the high-polymer electrolyte is called a lithium polymer battery. A lithium secondary battery is formed in various kinds of shapes, such as a cylindrical shape, a square shape, and a pouch shape.

Among the secondary batteries having these shapes, the edges of the secondary battery in a square shape may be crushed due to shocks during assembly and/or use. In order to prevent this problem, the secondary battery may be used after coupling a cover frame to a battery that covers the edges of the secondary battery.

The secondary battery has a rounded lateral side surface, and thus assembling the secondary battery with the cover frame is difficult due to the lateral rounded side surface. The assembly workers push the battery into the cover frame, and as a result, the cover frame is deformed inelastically. Moreover, because the cover frame does not return to the first shape due to the deformation, reassembling the secondary battery with the cover frame is difficult.

Also, a rounded side surface of the secondary battery with which the cover frame is in contact is depressed, affecting assembling reliability of the cover frame.

SUMMARY OF THE INVENTION

Aspects of the present invention provide a battery pack having a cover frame coupled to a battery without generating a plastic deformation of the cover frame.

According to an aspect of the present invention, a battery pack is provided. The battery pack includes a rechargeable battery having at least one rounded lateral side; a cover frame including sides surrounding each lateral side of the rechargeable battery, wherein at least one groove is formed at both ends of the side that covers the rounded lateral side of the rechargeable battery. According to another aspect of the invention, one side of the cover frame that is in contact with the rounded lateral side of the rechargeable battery is a rounded side to surround the rounded lateral side.

According to another aspect of the present invention, a battery pack is provided. The battery pack includes a rechargeable battery having at least one rounded lateral side; and a cover frame including sides surrounding each of the lateral sides of the rechargeable battery, wherein one side of the cover frame that is in contact with the rounded lateral side of the rechargeable battery is a rounded side surrounding the rounded lateral side. According to another aspect of the present invention, at least one groove is formed at both ends of the side covering the rounded lateral side of the rechargeable battery.

According to another aspect of the present invention, the rechargeable battery is a square shape as seen from a front of a wide side of the rechargeable, and the cover frame is formed in a square shape for surrounding a narrow lateral side of the rechargeable battery.

According to another aspect of the present invention, the groove is formed in a square shape or an arc shape.

According to another aspect of the present invention, the cover frame is formed by a thermoplastic resin.

According to another aspect of the present invention, a hole for a charging/discharging terminal is formed in a side of the cover frame.

According to another aspect of the present invention, the battery pack includes a protection circuit board arranged between one of the sides of the cover frame and the battery, on which a charging/discharging terminal is formed, wherein a hole to accommodate the charging/discharging terminal is formed in a frame of the cover frame.

According to another aspect of the present invention, an insulator to insulate the protection circuit board is arranged between the protection circuit board and the rechargeable battery.

According to another aspect of the present invention, a mount case to mount the protection circuit board is arranged between the protection circuit board and the rechargeable battery.

According to another aspect of the present invention, the battery pack includes a label surrounding a region in which the side having the groove is in contact with the rechargeable battery.

According to another aspect of the present invention, the rechargeable battery is a can type rechargeable battery.

According to another aspect of the present invention, the rechargeable battery is a pouch type rechargeable battery.

Additional aspects and/or advantages of the invention will be set forth in part in the description which follows and, in part, will be obvious from the description, or may be learned by practice of the invention.

BRIEF DESCRIPTION OF THE DRAWINGS

These and/or other aspects and advantages of the invention will become apparent and more readily appreciated from the following description of the embodiments, taken in conjunction with the accompanying drawings of which:

FIG. **1**A is an exploded perspective view illustrating a battery pack according to an embodiment of the present invention;

FIG. **1**B is a plane view illustrating a state that a cover frame is pulled into one direction for coupling a battery to the cover frame of FIG. **1**A;

FIG. **1**C is a cross-sectional view taken along I-I line of FIG. **1**A;

FIG. **1**D is a plane view illustrating battery coupled to a cover frame of FIG. **1**A;

FIG. **2** is an exploded perspective view illustrating a battery, a cover frame, and a coupling auxiliary according to another embodiment of the present invention;

FIG. **3** is an exploded perspective view illustrating a battery pack according to still another embodiment of the present invention;

FIG. **4**A is a perspective view illustrating a can type rechargeable battery according to still another embodiment of the present invention;

FIG. **4**B is an exploded perspective view illustrating the can type rechargeable battery of FIG. **4**A;

FIG. **5**A is an perspective view illustrating a pouch type rechargeable battery according to still another embodiment of the present invention; and

FIG. **5**B is an exploded perspective view illustrating the pouch type rechargeable battery of FIG. **5**A.

DETAILED DESCRIPTION OF THE EMBODIMENTS

Reference will now be made in detail to the present embodiments of the present invention, examples of which are illustrated in the accompanying drawings, wherein like reference numerals refer to the like elements throughout. The embodiments are described below in order to explain the present invention by referring to the figures.

FIG. **1**A is an exploded perspective view illustrating a battery pack **100** according to an embodiment of the present invention. The battery pack **100** includes a battery **110** and a cover frame **120**. According to other aspects of the present invention, the battery pack may include additional components.

The battery **110** is formed of at least one round surface **111** among several lateral sides. The battery **110** may be formed with two wide surfaces facing each other and three narrow surface connecting the two wide surfaces. In this case, at least two of the narrow surfaces are the respective round surfaces **111**.

The cover frame **120** includes a frame surrounding each of the lateral sides of the battery **110**. More than one groove **125** may be formed at both ends of the frame covering the lateral side of the battery **110** on which a round surface **111** is formed. The cover frame **120** surrounds the lateral sides of the battery **110**, and surrounds the battery **110** in order to protect the battery **110** from external shocks.

The cover frame **120** may be coupled to several batteries at once since each side **121**, **122**, **123**, **124** of the cover frame surrounding the batteries are integrally formed. In this case, the groove **125** in a square shape or an arc shape may be formed at both ends of the frame that is in contact with the rounded lateral sides **111** of the battery **110**. The groove **125** prevents both ends of the frame in contact with the rounded lateral side **111** of the battery **110** from being plastic-deformed when the battery **110** is inserted into the cover frame **120**.

FIG. **1**B is a plane view of a state that a cover frame is pulled into one direction for coupling the battery **110** to the cover frame **120** shown in FIG. **1***a*. The battery **110** is coupled to the cover frame **120** while the side **121** in contact with a rounded lateral side of a battery (not shown) is opened in a direction indicated by the arrow. If the groove **125** is not formed, a plastic deformation may be generated at both ends of the side **121** when the side **121** is stretched, thereby generating an assembling error between the cover frame **120** and the battery. By forming the groove **125**, the cover frame **120** is not deformed inelastically and the cover frame **120** can be returned to its original shape.

FIG. **1**C is a cross-sectional view taken along I-I line of FIG. **1***a*. One side **126** of the cover frame **120** covering a rounded lateral side of a battery (not shown) may be rounded so as to surround the rounded lateral side. When the rounded lateral side of the battery **110** and the cover frame **120** are coupled, a rounded lateral side of the cover frame **120** may cover the rounded lateral side of a battery in order to minimize the gap between the battery **110** and the cover frame **120**. Thus, the assembling force of the battery (not shown) and cover frame **120** can be improved. Also, assembling error of the battery and the cover frame **120** can be reduced.

FIG. **1**D is a plane view showing the battery **110** coupled to the cover frame **120**. The battery **110** is a square shape as seen from the front of a wide side of the battery **110**. The cover frame **120** may be formed in a square shape surrounding narrow lateral sides of the battery. As the size of the portable electronic devices is getting smaller and thinner, the thickness of the battery mounted in the portable electronic devices is getting thinner and is being widely used in a square shape in which excellent insertion is realized. However, in terms of the structure, there exists a problem that the edges of the battery **110** having such a structure are crushed flat due to the external shock or force of insertion. The edges of the battery **110** may be protected by surrounding the narrow lateral side of the battery **110** using the cover frame **120** in order to solve this shortcoming. The cover frame **120** is also formed in a square shape surrounding the narrow lateral side of the battery **110**.

The cover frame **120** may be formed of a thermoplastic resin. The cover frame **120** may be formed by an injection molding. The cover frame **120** may be formed by converting the original material into a thermoplastic resin having an elastic force and a restoring force. Among the thermoplastic resins, materials having excellent elasticity and anti-shock property, such as a polyethylene or an ABS resin that is not inflammable, may be employed.

FIG. **2** is an exploded perspective view of a battery pack **200**, including the battery **110**, the cover frame **120**, and a coupling auxiliary (insulating body) **220**, according to another embodiment of the present invention. As shown in FIG. **2**, a protection circuit board **210** is electrically coupled with a positive electrode **110***a* and a negative electrode **110***b* of the battery **110**. The protection circuit board **210** may be formed with a charging/discharging terminal **211**. In this case, a hole **212** for the charging/discharging terminal **211** is formed in one of the frames of the cover frame **120**. The hole **212** exposes a terminal side of the charging/discharging terminal **211** of the protection circuit board **210** to the outside. The charging/discharging terminal **211** is coupled to a load or a charging device, thereby charging/discharging the battery pack **200**. The protection circuit board **210** contains electrical elements including passive elements (not shown), active elements (not shown), and a protection circuit (not shown). These electrical elements may be welded to a print circuit pattern (not shown) formed on the upper side and the lower side of an insulating substrate **213**.

The protection circuit board **210** may be electrically coupled to a positive electrode and a negative electrode of the

battery **110** by a positive/negative lead tab **214**. A protection circuit of the protection circuit board **210** electrically coupled to the battery **110** is electrically coupled to the active elements and the passive elements to control all kinds of states of the battery **110** and to check the remaining charge of the battery **110**. Charging or discharging may be controlled by selecting a suitable charging method according to the charging/discharging state of a secondary battery. The protection circuit stores information about the battery **110**, such as a voltage, a current, a temperature, a remaining charge, and the like, and transmits the information to external devices. The protection circuit may be an integrated circuit in which a plurality of logic elements and active/passive elements are integrated.

A positive/negative display groove **215** may be formed around the hole **212** formed in the cover frame **120**. The positive/negative display groove **215** displays a positive electrode and a negative electrode of the charging/discharging terminal **211** so that polarity information of a battery pack may be notified to a user.

An insulating body **220** for insulating the protection circuit board **210** may be formed between the protection circuit board **210** and the battery **110**. The insulating body **220** insulates the protection circuit board **210** and the battery **110** to prevent a short between the protection circuit board **210** and the battery **110**. The insulating body **220** may be formed of resins, such as polypropylene or polyethylene or the like. However, the present invention is not limited thereto; the insulating body **120** may be composed of any insulating material. The insulating body **220** may be formed in a variety of shapes according to a lateral shape of the battery **110**.

A positive/negative coupling hole **221** may be formed in the insulating body **220** to couple the protection circuit board **210** to the positive electrode and the negative electrode of the battery **110**. A positive/negative lead tab **214** electrically coupled to the protection circuit board **210** may be electrically coupled to the positive electrode **110***a* and negative electrode **110***b* via the positive/negative coupling hole **221**.

A mounting case **230** for mounting the protection circuit board **210** may be formed between the protection circuit board **230** and the battery **110**. The mounting case **230** forms a protrusion **231** so that the mounting case **230** may be hooked to a hook hole **232** formed in the cover frame **120**. Here, the cover frame **120** and the protection circuit board **210** are coupled integrally by mounting the protection circuit board **210**. In particular, the mounting case **230** supports the protection circuit board **210** so that a terminal side of the charging/discharging terminal **211** formed in the protection circuit board **210** is coupled to the hole **212** for charging/discharging terminal formed in the cover frame **120** correctly. In the mounting case **230**, lateral walls **233** are formed for mounting the protection circuit board **210**, and a hole **234** may be formed for securing a space on which the electrical elements mounted in the protection circuit board **210** are positioned.

FIG. **3** is an exploded perspective view showing a battery pack **300** according to still another embodiment of the present invention. The battery pack **300** includes a battery **110**, a cover frame **120** and a label **310**.

The label **310** adheres the rounded side **121** formed by the groove **125** to the wide surface **301** of the battery **110**. As a result, a coupling force between the battery **110** and cover frame **120** is improved by the label **310**. The adhesive may be polypropylene or polyethylene so that the battery and the cover frame may be coupled. However, the present invention does not limit the materials and the structure of the label **310**.

FIG. **4**A is a perspective view showing a can type rechargeable battery **400** according to still another embodiment of the present invention. FIG. **4**B is an exploded perspective view showing the can type rechargeable battery **400**.

Referring to FIG. **4**A, a battery **400** using the battery pack is formed as a can type rechargeable battery. The can type rechargeable battery **400** may be recharged and formed with at least one rounded lateral side formed.

The can type rechargeable battery **400** may include an electrode assembly **410**, a can **420**, and a cap assembly **430**. The electrode assembly **410** may be formed by stacking a positive electrode plate **411** to which a positive electrode tab **415** is coupled, a negative electrode plate **412** to which a negative electrode tab **415** is coupled, and a separator **413**, and then winding the positive electrode plate **411**, the separator **413**, and the negative electrode plate **412**.

The positive electrode plate **411** includes a positive electrode collector and a positive electrode coating portion. The positive electrode coating portion may be composed of a layered compound containing a lithium compound, a binder for improving a bonding strength, and a conductive material for improving conductivity. Generally, aluminum is used as the positive electrode collector; however, other materials may be used as well. The positive electrode collector is used as a path through which charges generated in the positive electrode coating portion move, and supports the positive electrode coating portion. The positive electrode coating portion is attached over the wide sides of the positive electrode collector. A positive electrode non-coating portion (not shown) on which the positive electrode coating portion is not formed is formed on a lateral side of the positive electrode plate **411**. The positive electrode tab **414** is coupled to the positive electrode non-coating portion.

The negative electrode plate **412** includes a negative electrode collector and a negative electrode coating portion. The negative electrode coating portion may be composed of hard carbon or graphite containing carbon and a binder for improving bonding strength between active material particles. In general, the negative electrode collector is formed of copper, and serves as a passage for an electric charge generated from the negative electrode coating portion, though other materials may be used as well. The negative electrode collector supports the negative electrode coating portion. The negative electrode coating portion is formed on a wide surface of the negative electrode plate. A negative electrode non-coating portion (not shown), in which the negative electrode coating portion is not formed, is formed at one end of the negative electrode plate **412**. The negative electrode tab **415** is connected to the negative electrode non-coating portion.

The separator **413** interposed between the positive electrode plate **411** and the negative electrode plate **412** insulates the positive electrode plate **411** from the negative electrode plate **412**, but transmits charges of the positive electrode plate **411** and the negative electrode plate **412**. The separator is generally formed of polyethylene (PE) or polypropylene (PP), but other materials may be used as well. When the separator **413** is a separator for a lithium-polymer battery, air holes may be formed in the separator **413**, and thus the separator **413** may include the air holes and the polymer electrolyte.

The can **420** has one end side open to accommodate the electrode assembly **410**. The can **420** may be formed in a square shape or an elliptic shape, based on the shape of the electrode assembly **410**. The can **420** accommodates an insulating case **436** on the upper side of the electrode assembly **410**. The insulating case **436** is coupled to the can **420** by covering a cap plate **431** on an opening of the can **420**, and then welding the insulating case **436** to the can **420**. Generally, aluminum is used as the material of the can **420**, though

other materials may be used as well. A lateral side **421** of the can **420** may be round. The can **420** may be formed with two wide surfaces facing each other and three narrow surface connecting the two wide surfaces. In this case, at least two of the narrow surfaces are respective rounded surfaces **421**.

The cap assembly **430** includes a cap plate **431**, an electrode terminal **432**, an insulating gasket **433**, the insulating case **436**, a terminal plate **434**, and an insulating plate **435**. The cap plate **431** covers the opening of the can **420**, and includes an electrolyte injection hole lid **431***a* formed on the upper side thereof to seal an electrolyte injection hole **431***a*, a safety vent **431***c* to open the can so as to prevent an explosion, and is thus electrically coupled to the positive electrode tab **414**. The electrode terminal **432** is mounted in a middle hole of the cap plate **431** and electrically coupled to the negative electrode tab **415**. The insulating gasket **433** insulates the electrode terminal **432** and the cap plate **431** by surrounding a body of the electrode terminal **432**. The insulating case **436** includes a hole to project the positive electrode tab **414** and the negative electrode tab **415**, and is mounted on the upper side of the electrode assembly **410** to insulate the upper surface of the electrode assembly **410**. The terminal plate **434** provides a hole to allow an end of the electrode terminal **432** to be pressed and then fixed. The insulating plate **435** insulates the terminal plate **434** and the cap plate **431**.

The insulating gasket **433**, the insulating case **436**, and the insulating plate **435** may be formed of insulating materials, such as polyethylene resin or polypropylene resin or the like. The electrode terminal **432**, the cap plate **431**, and the terminal plate **434** may be formed of conductive metals, such as aluminum or nickel, or an alloy including a conductive metal and so on. However, any materials or structure of the cap assembly **430** may be employed.

FIG. **5**A is a perspective view illustrating a pouch type rechargeable battery **500** according to still another embodiment of the present invention. FIG. **5**B is an exploded perspective view illustrating the pouch type rechargeable battery **500**.

As shown in FIG. **5**A, a battery using the battery pack of the present invention may be formed as the pouch type rechargeable battery **500**. The pouch type rechargeable battery **500** may be recharged, and at least one lateral side of the pouch type rechargeable battery **500** may be rounded.

As shown in FIG. **5**B, the pouch type rechargeable battery **500** includes a electrode assembly **410** and a pouch **510**. The electrode assembly **410** may be an electrode assembly used for the can type rechargeable battery **400**. The separator **413** used may contain a polymer electrolyte. The electrode assembly **410** used for the pouch type rechargeable battery **400** may be an electrode assembly for a lithium polymer battery.

The pouch **510** accommodates the electrode assembly **410** with the positive electrode tab **414** and the negative electrode tab **415** exposed therefrom. The pouch **510** may be formed of a multi-layer film. In the multi-layer film, a thermal adhesive layer (not shown), which is an inner layer, may be formed of CPP (casted polypropylene), an intermediate barrier layer (not shown) may be formed of an aluminum layer, and an outer protection layer (not shown) may be formed of a nylon layer. The pouch **510** may include a lower film **511** having a groove **511***a* to accommodate the electrode assembly **410** formed therein and an upper film **512** to seal an opening of the lower film **511**. The lower film **511** and the upper film **512** are bonded to each other by heating the thermal adhesive layer, which is a contact portion between the lower film **511** and the upper film **512**. A positive electrode/negative electrode insulating tape **520** interposed between the lower film **511** and the upper film **512** may be attached to the pouch **510** by applying heat. However, the structure of the pouch and materials forming the pouch are not limited to the above. After the pouch **510** accommodates the electrode assembly **410**, the pouch **510** folds an external sealing region, and the external sealing region may be a round region. As shown in FIG. **5**A, the sealing portion of the external sealing region folded of FIG. **5**A is a rounded portion **510***a*.

As the battery pack according to aspects of the present invention includes a groove in a cover frame for restoring the cover frame to a former state, the battery back is easily assembled without damage. Also, the battery pack according to aspects of the present invention is formed with a rounding in a cover frame in which a rounded surface of a battery is assembled, thus improving reliability in assembling a battery with a cover frame.

Although a few embodiments of the present invention have been shown and described, it would be appreciated by those skilled in the art that changes may be made in this embodiment without departing from the principles and spirit of the invention, the scope of which is defined in the claims and their equivalents.

What is claimed is:

1. A battery pack comprising:

a rechargeable battery having a rounded lateral side; and

a cover comprising:

a first frame having opposing ends;

a second frame and a third frame crossing the first frame and connected to the opposing ends of the first frame; and

a rounded fourth frame connecting the second frame to the third frame,

wherein the rounded fourth frame corresponds to and is configured to surround the rounded lateral side of the rechargeable battery,

wherein the rechargeable battery is configured to be inserted into the cover and removed from the cover, and

wherein the rounded fourth frame is flexible and has cut portions formed at opposing ends thereof, respectively, so as to enable the rounded fourth frame to outwardly expand when the rechargeable battery is being inserted into the cover or being removed from the cover.

2. The battery pack according to claim **1**, wherein the rounded fourth frame contacts the rounded lateral side of the rechargeable battery.

3. The battery pack according to claim **1**, wherein the rechargeable battery is a square shape as seen from a front of a wide side of the rechargeable battery, and wherein the cover is formed in a square shape surrounding a narrow lateral side of the rechargeable battery.

4. The battery pack according to claim **1**, wherein the cover is formed of thermoplastic resin.

5. The battery pack according to claim **1**, further comprising a protection circuit board arranged between the cover and the battery, on which a charging/discharging terminal is formed; and

wherein a hole to accommodate the charging/discharging terminal is formed in any one of the frames of the cover.

6. The battery pack according to claim **5**, further comprising an insulator to insulate the protection circuit board arranged between the protection circuit board and the rechargeable battery.

7. The battery pack according to claim **5**, further comprising a mount case to mount the protection circuit board and arranged between the protection circuit board and the rechargeable battery.

8. The battery pack according to claim **1**, further comprising a label surrounding a region in which the rounded fourth frame contacts the rechargeable battery.

9. The battery pack according to claim **1**, wherein the rechargeable battery comprises:

an electrode assembly;

a can to accommodate the electrode assembly via an opening and having at least one rounded side; and

a cap assembly to cover the opening of the can.

10. The battery pack according to claim **1**, wherein the rechargeable battery comprises:

an electrode assembly; and

a pouch to accommodate the electrode assembly by sealing and having at least one rounded side.

11. The battery pack according to claim **1**, wherein the second and third frames are flexible so as to inwardly contract when the rounded fourth frame expands.

12. A battery pack comprising:

a rechargeable battery having a rounded lateral side; and

a cover comprising:

a first frame having opposing ends;

a second frame and a third frame crossing the first frame and connected to the opposing ends of the first frame; and

a rounded fourth frame connecting the second frame to the third frame,

wherein the rounded fourth frame corresponds to and is configured to surround and contact the rounded lateral side of the rechargeable battery,

wherein the rechargeable battery is configured to be inserted into the cover and removed from the cover, and

wherein the rounded fourth frame is flexible and has cut portions formed at opposing ends thereof, respectively, so as to enable the rounded fourth frame to outwardly expand when the rechargeable battery is being inserted into the cover or being removed from the cover.

13. The battery pack according to claim **12**, wherein:

the rechargeable battery has a square shape as seen from a front of a wide side of the rechargeable battery; and

the cover frame is formed in a square shape surrounding a narrow lateral side of the rechargeable battery.

14. The battery pack according to claim **12**, wherein the cover is formed of thermoplastic resin.

15. The battery pack according to claim **12**, further comprising a protection circuit board arranged between the cover and the battery, on which a charging/discharging terminal is formed; and

wherein a hole to accommodate the charging/discharging terminal is formed in one of the frames of the cover.

16. The battery pack according to claim **15**, further comprising an insulator to insulate the protection circuit board arranged between the protection circuit board and the rechargeable battery.

17. The battery pack according to claim **15**, further comprising a mount case to mount the protection circuit board and arranged between the protection circuit board and the rechargeable battery.

18. The battery pack according to claim **12**, further comprising a label surrounding a region in which the rounded fourth frame contacts the rechargeable battery.

19. The battery pack according to claim **12**, wherein the rechargeable battery comprises:

an electrode assembly;

a can to accommodate the electrode assembly via an opening and having at least one rounded side; and

a cap assembly to cover the opening of the can.

20. The battery pack according to claim **12**, wherein the rechargeable battery comprises:

an electrode assembly; and

a pouch to accommodate the electrode assembly by sealing and having at least one rounded side.

21. A battery pack comprising:

a rechargeable battery having a rounded side;

a cover coupled to the rechargeable battery comprising:

a first frame having opposing ends;

a second frame and a third frame crossing the first frame and connected to the opposing ends of the first frame; and

a rounded fourth frame connecting the second frame to the third frame,

wherein the rounded fourth frame corresponds to and is configured to surround the rounded side of the rechargeable battery,

wherein the rechargeable battery is configured to be inserted into the cover and removed from the cover,

wherein the rounded fourth frame is flexible and has cut portions formed at opposing ends thereof, respectively, so as to enable the rounded fourth frame to outwardly expand when the rechargeable battery is being inserted into the cover or being removed from the cover; and

an adhesive label surrounding the rounded fourth frame to adhere the cover to the rechargeable battery.

* * * * *

UNITED STATES PATENT AND TRADEMARK OFFICE

CERTIFICATE OF CORRECTION

PATENT NO. : 9,178,194 B2
APPLICATION NO. : 12/183364
DATED : November 3, 2015
INVENTOR(S) : Kyungho Park et al.

It is certified that error appears in the above-identified patent and that said Letters Patent is hereby corrected as shown below:

In the claims

In column 9 at line 41, In Claim 13, change “cover frame” to --cover--.

Signed and Sealed this
Ninth Day of August, 2016

Michelle K. Lee

Michelle K. Lee
Director of the United States Patent and Trademark Office