US 20150364729A1

(19) United States

(12) Patent Application Publication

JANG

(10) Pub. No.: US 2015/0364729 A1

(43) Pub. Date: Dec. 17, 2015

(54) RECHARGEABLE BATTERY HAVING CORNER FOLDING PORTION

(71) Applicant: SAMSUNG SDI CO., LTD., Yongin-si (KR)

(72) Inventor: Hyun-Joong JANG, Yongin-si (KR)

(21) Appl. No.: 14/671,722

(22) Filed: Mar. 27, 2015

(30) Foreign Application Priority Data

Jun. 17, 2014 (KR) 10-2014-0073669

Publication Classification

(51) Int. Cl.
H01M 2/02 (2006.01)

(52) U.S. Cl.
CPC *H01M 2/0275* (2013.01)

(57) ABSTRACT

A rechargeable battery includes: an electrode assembly; and a pouch case including a receiving portion accommodating the electrode assembly, and an edge portion at an outer side of the receiving portion, the edge portion including a first bent portion extending in a length direction of the edge portion, a second bent portion extending in a length direction of the edge portion, the first bent portion being bent relative to the second bent portion, and a bent corner folding portion at a corner of the edge portion.

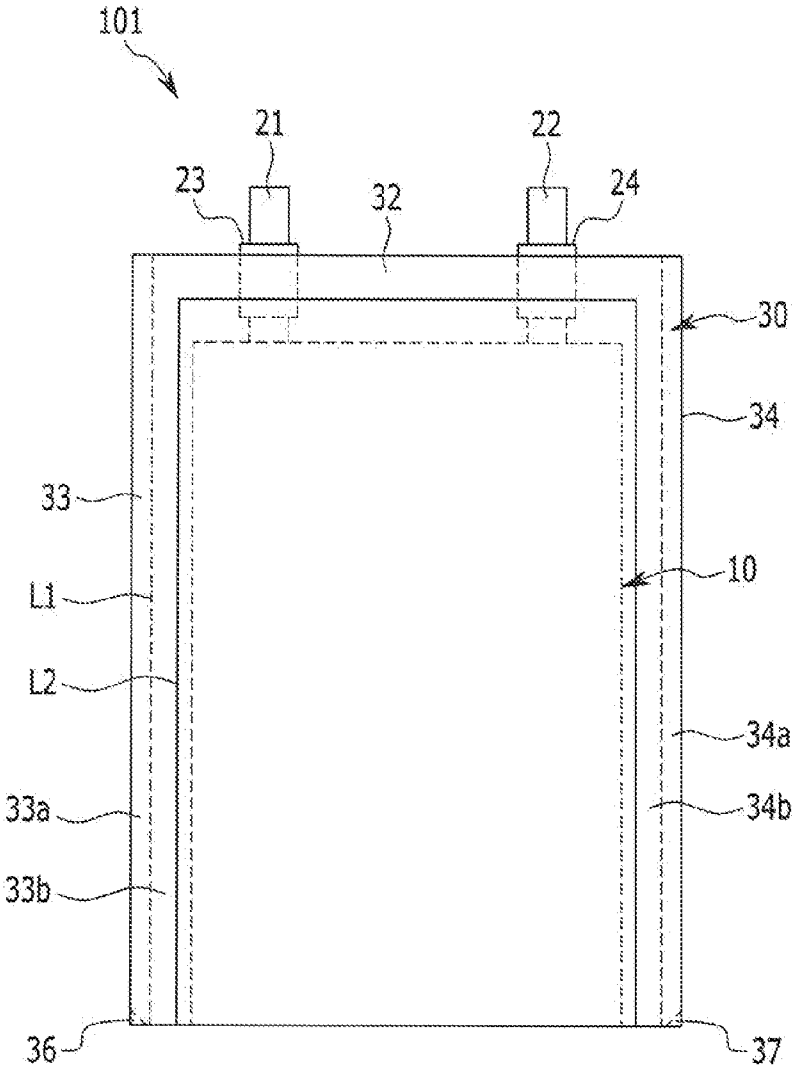

Zhuhai CosMX Battery Co. EX1020
Zhuhai CosMX Battery Co. v. Ningde Amperex Tech. Ltd.

FIG. 1

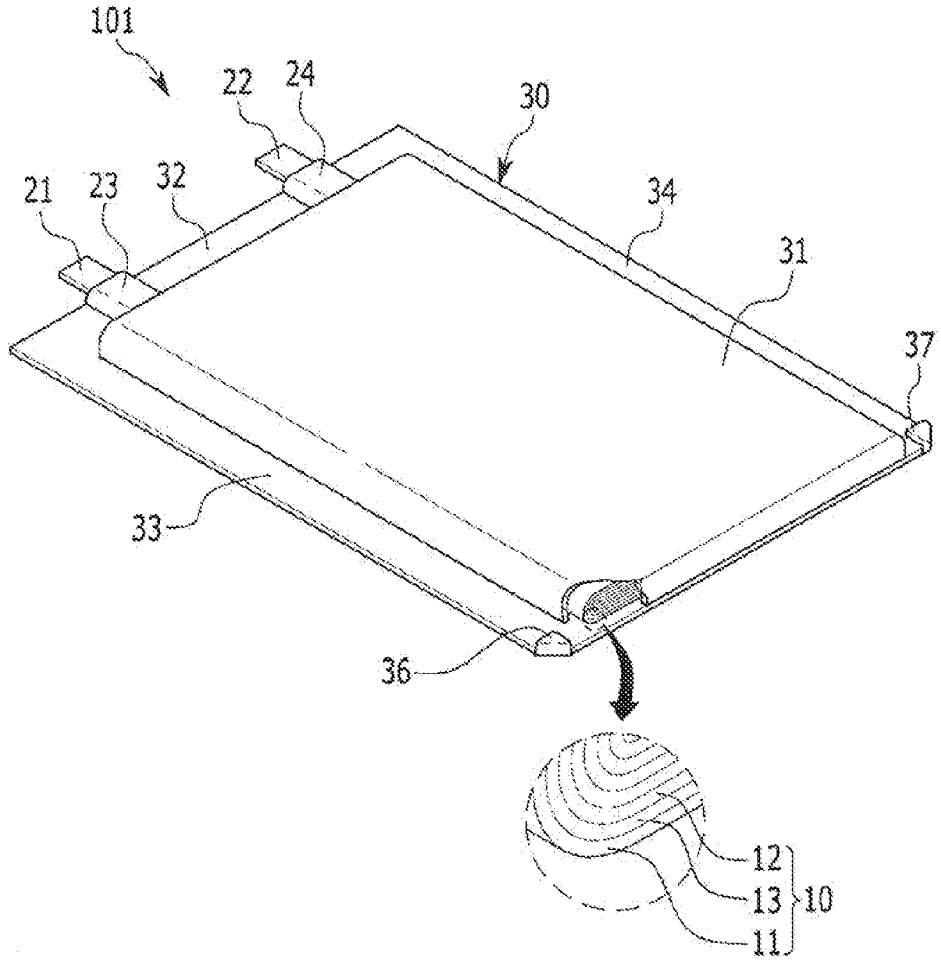

FIG. 2

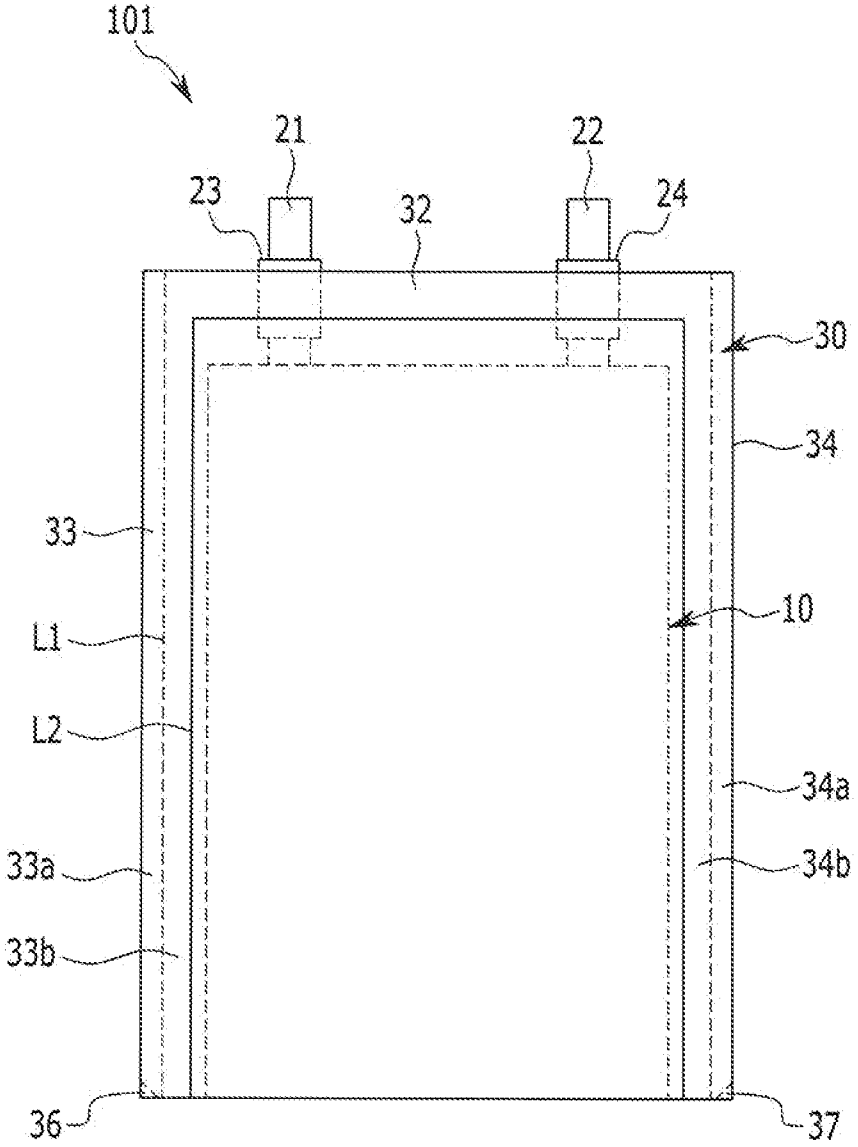

FIG. 3

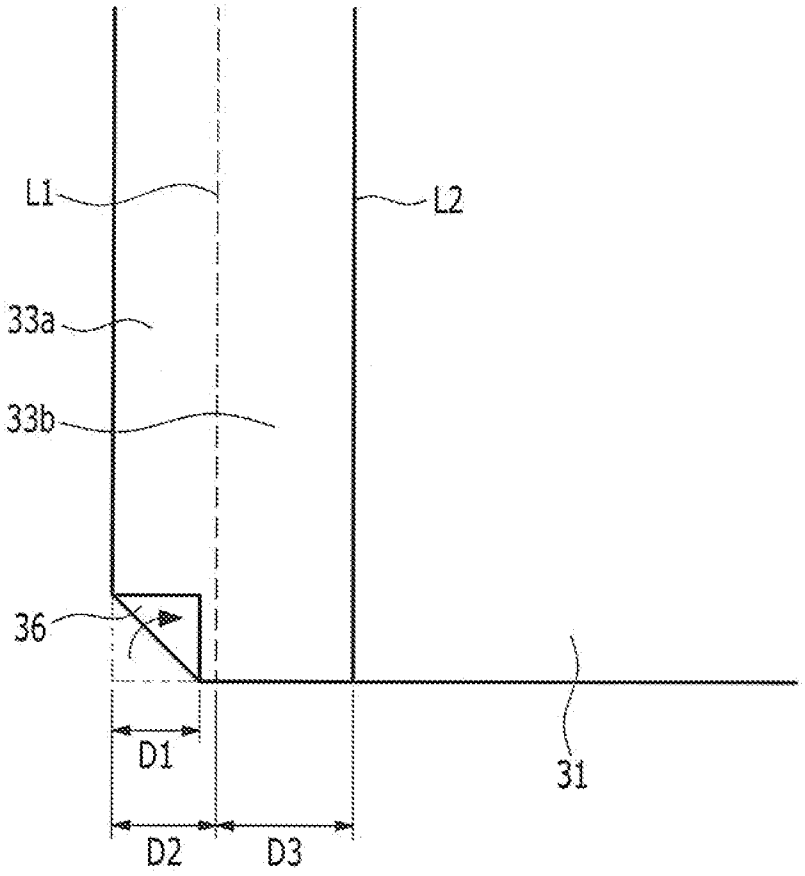

FIG. 4A

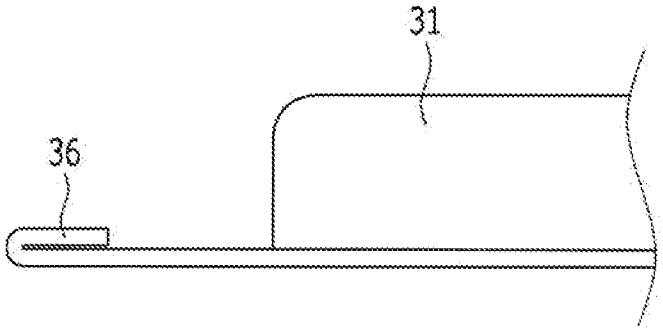

FIG. 4B

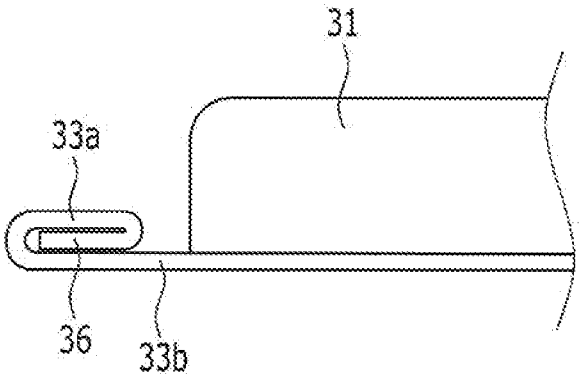

FIG. 4C

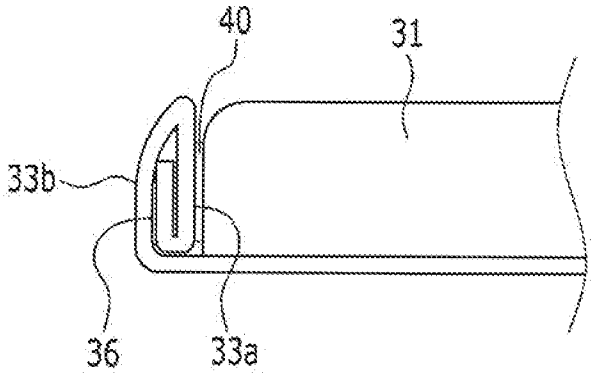

RECHARGEABLE BATTERY HAVING CORNER FOLDING PORTION

CROSS-REFERENCE TO RELATED APPLICATION

[0001] This application claims priority to and the benefit of Korean Patent Application No. 10-2014-0073669, filed Jun. 17, 2014 in the Korean intellectual Property Office, the entire content of which is incorporated herein by reference.

BACKGROUND

[0002] 1. Field

[0003] Aspects of embodiments of the present invention relate to a rechargeable battery.

[0004] 2. Description of the Related Art

[0005] A rechargeable battery differs from a primary battery in that it can be repeatedly charged and discharged, while the latter is incapable of being recharged.

[0006] A low-capacity rechargeable battery is used in small portable electronic devices, such as mobile phones, notebook computers, and camcorders, while a high-capacity rechargeable battery can be widely used as a power source for driving a motor, such as of hybrid vehicles, electric vehicles, and the like.

[0007] Recently, high-power rechargeable batteries using a non-aqueous electrolyte and having high energy density have been developed, and the high-power rechargeable batteries are coupled in series or parallel, thereby forming a high-power, large-capacity battery module.

[0008] In general, the rechargeable battery is provided with an electrode assembly including a positive electrode, a negative electrode, and a separator interposed therebetween.

[0009] The electrode assembly is inserted in a case to perform charging and discharging operations, and is provided with terminals to and from which a current is supplied or drawn out.

[0010] The case may be formed of a metal plate or pouch, and a pouch case is formed as a laminate film in which a metal film is interposed between insulating layers.

[0011] When a corner protrudes in such a pouch case, there is a risk of causing a short circuit with a neighboring battery.

[0012] The above information disclosed in this Background section is only for enhancement of understanding of the background of the invention and therefore it may contain information that does not form the prior art that is already known in this country to a person of ordinary skill in the art.

[0013] According to an aspect of embodiments of the present invention, a rechargeable battery has a corner folding portion. According to another aspect of embodiments of the present invention, in a rechargeable battery, a corner of a pouch case is prevented or substantially prevented from protruding.

[0014] According to one or more exemplary embodiments of the present invention, a rechargeable battery includes: an electrode assembly; and a pouch case including a receiving portion accommodating the electrode assembly, and an edge portion at an outer side of the receiving portion, the edge portion including a first bent portion extending in a length direction of the edge portion, a second bent portion extending in a length direction of the edge portion, the first bent portion being bent relative to the second bent portion, and a bent corner folding portion at a corner of the edge portion.

[0015] The corner folding portion may be positioned between the first bent portion and the second bent portion. The corner folding portion may be slantedly bent with respect to a length direction of the first bent portion.

[0016] The rechargeable battery may include a positive electrode tab and a negative electrode tab that are electrically coupled to the electrode assembly and that protrude outwardly from the pouch case, and the corner folding portion may be formed at a corner of an end portion of the pouch case that is opposite to an end portion from which the positive and negative electrode tabs protrude.

[0017] The first bent portion may be attached to a lateral side of the receiving portion. The first bent portion may be attached to the lateral side of the receiving portion through an adhesive layer between the receiving portion and the first bent portion.

[0018] A width of the second bent portion may be greater than a width of the first bent portion. The width of the second bent portion may be 1.1 to 1.3 times the width of the first bent portion.

[0019] A width of the corner folding portion may be less than the width of the first bent portion. The width of the corner folding portion may be 0.5 to 0.8 times the width of the first bent portion.

[0020] According to an aspect of embodiments of the present invention, a corner folding portion is formed to be positioned between a first folding portion and a second folding portion, thereby preventing or substantially preventing the corners from protruding to cause a short circuit.

BRIEF DESCRIPTION OF THE DRAWINGS

[0021] Some example embodiments of the present invention are described more fully hereinafter with reference to the accompanying drawings; however, the present invention may be embodied in different forms and should not be construed as limited to the embodiments set forth herein. Rather, the accompanying drawings, together with the specification, illustrate some example embodiments of the present invention, and serve to explain principles and aspects of the present invention. Also, some dimensions in the drawings may be exaggerated for clarity.

[0022] FIG. **1** is a perspective view of a rechargeable battery according to an exemplary embodiment of the present invention.

[0023] FIG. **2** is a top view of the rechargeable battery of FIG. **1**.

[0024] FIG. **3** is a partial top view of the rechargeable battery of FIG. **1**.

[0025] FIG. **4**A is a side view of a corner folding portion folded in the rechargeable battery of FIG. **1**; FIG. **4**B is a side view of a first bent portion folded in the rechargeable battery of FIG. **4**A; and FIG. **4**C is a side view of a second bent portion folded in the rechargeable battery of FIG. **4**B.

DESCRIPTION OF REFERENCE NUMERALS INDICATING SOME ELEMENTS IN THE DRAWINGS

[0026]

101: rechargeable battery	10: electrode assembly
11: positive electrode	12: negative electrode
13: separator	21: positive electrode tab

-continued

22: negative electrode tab	23, 24: protective tape
30: pouch case	31: receiving portion
32: upper edge	33: first lateral edge portion
34: second lateral edge portion	33a, 34a: first bent portion
33b, 34b: second bent portion	36, 37: corner folding portion
40: adhesive layer	

DETAILED DESCRIPTION

[0027] The present invention will be described more fully hereinafter with reference to the accompanying drawings, in which some exemplary embodiments of the invention are shown. As those skilled in the art would realize, the described embodiments may be modified in various different ways, all without departing from the spirit or scope of the present invention. Accordingly, the drawings and description are to be regarded as illustrative in nature and not restrictive. Like reference numerals designate like elements throughout the specification and the drawings.

[0028] FIG. **1** is a perspective view of a rechargeable battery according to an exemplary embodiment of the present invention; and FIG. **2** is a top view of the rechargeable battery shown in FIG. **1**.

[0029] Referring to FIGS. **1** and **2**, a rechargeable battery **101** according to an exemplary embodiment of the present invention includes an electrode assembly **10** for performing charging and discharging operations, a pouch case **30** for accommodating the electrode assembly **10**, and positive and negative electrode tabs **21** and **22** electrically coupled to the electrode assembly **10** and protruding outwardly from the pouch case **30**.

[0030] The electrode assembly **10** includes a positive electrode **11**, a negative electrode **12**, and a separator **13** interposed between the positive and negative electrodes **11** and **12**.

[0031] The positive electrode **11**, in one embodiment, includes a positive electrode current collector that is formed of a strip-shaped thin metallic plate, and a positive electrode active material layer that is coated on one surface or opposite surfaces of the positive electrode current collector.

[0032] The positive electrode current collector may be formed of a metallic material having excellent conductivity such as a thin aluminum plate, for example.

[0033] The positive electrode active material layer may be formed of a material in which a lithium-based oxide is mixed with a binder, a conductive material, etc.

[0034] The negative electrode **12**, in one embodiment, includes a negative electrode current collector that is formed of a strip-shaped thin metallic plate, and a negative active material layer that is coated on one surface or opposite surfaces of the negative electrode current collector.

[0035] The negative electrode current collector may be formed of a metallic material having excellent conductivity, such as a thin copper plate, for example.

[0036] The negative active material layer may be formed of a material in which a negative active material such as a carbon material and the like is mixed with a binder, a conductive material, and the like.

[0037] The separator **13** is formed of a porous material and may be formed of polyolefin, polyethylene, polypropylene, etc.

[0038] The positive electrode **11** includes a positive electrode coated region where a positive electrode active material layer is coated, and a positive electrode uncoated region where a positive electrode active material layer is not coated.

[0039] The negative electrode **12** includes a negative electrode coated region where a negative active material layer is coated, and a negative electrode uncoated region where a negative active material layer is not coated.

[0040] In one embodiment, the positive electrode uncoated region is disposed at one lateral end of the electrode assembly **10** in a length direction thereof, and the negative electrode uncoated region is disposed at the other lateral end of the electrode assembly **10** in the length direction thereof.

[0041] The positive electrode tab **21** is bonded to the positive electrode uncoated region, and the negative electrode tab **22** is bonded to the negative electrode uncoated region.

[0042] The positive and negative electrode tabs **21** and **22** protrude outwardly from the pouch case **30**, and protective tapes **23** and **24** are wound around the positive and negative electrode tabs **21** and **22** to insulate the pouch case **30** therefrom.

[0043] In one embodiment, the pouch case **30** includes upper and lower plates, and the upper and lower plates are thermo-bonded to form a receiving portion **31** and an edge portion.

[0044] The receiving portion **31**, in one embodiment, convexly protrudes to accommodate the electrode assembly **10** and is disposed at a center of the pouch case **30**.

[0045] The receiving portion **31** may have a quadrangular cross-sectional shape.

[0046] The edge portion, in one embodiment, includes an upper edge portion **32** from which the positive and negative electrode tabs **21** and **22** protrude, and first and second lateral edge portions **33** and **34** that are fanned to be coupled to lateral ends of the upper edge portion **32**.

[0047] The first lateral edge portion **33** is formed with a first bent portion **33***a* that extends in a length direction of the first lateral edge portion **33** to be folded, and a second bent portion **33***b* that is positioned inwardly from the first bent portion **33***a*.

[0048] The first bent portion **33***a* is bent based on a first line L**1** that extends in the length direction of the first lateral edge portion **33**, and the second bent portion **33***b* is bent based on a second line L**2** that extends in the length direction of the first lateral edge portion **33**.

[0049] The first line L**1** and the second line L**2** are disposed in parallel with each other, and the second line L**2** may correspond to a lower end of a lateral side of the receiving portion **31**.

[0050] FIG. **3** is a partial top view of the rechargeable battery **101** according to the exemplary embodiment of the present invention.

[0051] Referring to FIG. **3**, a width D**3** of the second bent portion **33***b* is formed to be larger than a width D**2** of the first bent portion **33***a*, and, in one embodiment, the width D**3** of the second bent portion **33***b* is formed to be 1.1 to 1.3 times the width D**2** of the first bent portion **33***a*.

[0052] The width D**3** of the second bent portion **33***b* being 1.1 to 1.3 times the width D**2** of the first bent portion **33***a* provides for stable positioning of the first bent portion **33***a* between the second bent portion **33***b* and the lateral side of the receiving portion **31**.

[0053] In addition, as shown in FIGS. **2** and **3**, a corner folding portion **36** is formed to be bent at a corner of the first bent portion **33***a*, and in the pouch case **30**, the corner folding portion **38** is formed at a corner of an end portion that is

opposite to the other end portion from which the positive and negative electrode tabs **21** and **22** protrude.

[0054] The corner folding portion **36** is slantedly bent with respect to the length direction of the first bent portion **33***a* such that the corner folding portion **36** is substantially formed in the shape of a triangular plate.

[0055] A maximum width D**1** of the corner folding portion **36** is formed to be smaller than the width D**2** of the first bent portion **33***a*, and, in one embodiment, the maximum width D**1** of the corner folding portion **36** is formed to be 0.5 to 0.8 times the width D**2** of the first bent portion **33***a*.

[0056] If the maximum width D**1** of the corner folding portion **36** is larger than the width D**2** of the first bent portion **33***a*, the corner folding portion **36** may have an excessively large thickness when being folded.

[0057] The corner folding portion **36** may be stably positioned between the first bent portion **33***a* and the second bent portion **33***b* if the maximum width D**1** of the corner folding portion **36** is formed to be 0.5 to 0.8 times the width D**2** of the first bent portion **33***a*.

[0058] Similarly, the second lateral edge portion **34** is formed with a first bent portion **34***a* that extends in a length direction of the second lateral edge portion **34** to be folded, and a second bent portion **34***b* that is positioned inwardly from the first bent portion **34***a*.

[0059] In addition, a corner folding portion **37** is formed at a lower corner of the first bent portion **34***a* to be bent in the shape of a triangle.

[0060] FIG. **4**A is a side view of the corner folding portion **36** folded in the rechargeable battery **101** according to the exemplary embodiment of the present invention; FIG. **4**B is a side view of the first bent portion **33***a* folded in the rechargeable battery **101** according to the exemplary embodiment of the present invention; and FIG. **4**C is a side view of the second bent portion **33***b* folded in the rechargeable battery **101** according to the exemplary embodiment of the present invention.

[0061] A forming method of the corner folding portion **36**, the first bent portion **33***a*, and the second bent portion **33***b* is described below with reference to FIGS. **4**A to **4**C. The corner folding portion **36** is formed, as shown in FIG. **4**A, by folding the lower corner of the pouch case **30**.

[0062] Then, the first lateral edge portion **33** is partially folded along the first line L**1**, as shown in FIG. **4**B, to form the first bent portion **33***a*.

[0063] Thus, the corner folding portion **36** is positioned between the first bent portion **33***a* and the second bent portion **33***b*.

[0064] Then, as shown in FIG. **4**C, the second bent portion **33***b* is bent to be erected in parallel with the lateral side of the receiving portion **31**.

[0065] As a result, the first bent portion **33***a* and the corner folding portion **36** are positioned between the second bent portion **33***b* and the lateral side of the receiving portion **31**, and the first bent portion **33***a* may be attached to the lateral side of the receiving portion **31**.

[0066] In one embodiment, an adhesive layer **40** is formed between the first bent portion **33***a* and the receiving portion **31**, and the adhesive layer **40** supports the first bent portion **33***a*.

[0067] The adhesive layer **40** may be formed of an adhesive tape or an applied adhesive material.

[0068] As described above, once the corner folding portions **36** and **37** are formed, a short circuit caused by an outwardly protruding corner can be prevented.

[0069] Even if a thickness of the rechargeable battery **101** is thin, thicknesses of the edge portions **33** and **34** may hot be decreased so as to secure sealing performance.

[0070] Thus, if the widths of the edge portions **33** and **34** are formed to be higher than a height of the receiving portion **31** such that the edge portions **33** and **34** are erected to be fixed to the lateral sides of the receiving portion **31**, there is a problem that the edge portions **33** and **34** upwardly protrude further than the receiving portion **31**.

[0071] In the present exemplary embodiment, in order to solve such a problem, the edge portions **33** and **34** are folded several times to be attached to the lateral sides of the receiving portion **31**.

[0072] However, when the edge portions **33** and **34** are folded several times, misalignment may occur to cause corners of the edge portions **33** and **34** to outwardly protrude.

[0073] However, according to the present exemplary embodiment, since the corner folding portions **36** and **37** are formed, the corners do not outwardly protrude even when the edge portions **33** and **34** are folded several times.

[0074] In addition, the corner folding portions **36** and **37** according to the present exemplary embodiment are positioned between the first bent portions **33***a* and **34***a* and the second bent portions **33***b* and **34***b*, thereby preventing or substantially preventing the corner folding portions **36** and **37** from being unfolded.

[0075] While the present invention has been described in connection with some exemplary embodiments, it is to be understood that the present invention is not limited to the disclosed embodiments, but, on the contrary, is intended to cover various modifications and equivalent arrangements included within the spirit and scope of the appended claims.

What is claimed is:

1. A rechargeable battery comprising:

an electrode assembly: and

a pouch case comprising:

a receiving portion accommodating the electrode assembly; and

an edge portion at an outer side of the receiving portion, the edge portion including a first bent portion extending in a length direction of the edge portion, a second bent portion extending in a length direction of the edge portion, the first bent portion being bent relative to the second bent portion, and a bent corner folding portion at a corner of the edge portion.

2. The rechargeable battery of claim **1**, wherein the corner folding portion is positioned between the first bent portion and the second bent portion.

3. The rechargeable battery of claim **2**, wherein the corner folding portion is slantedly bent with respect to a length direction of the first bent portion.

4. The rechargeable battery of claim **2**, wherein the rechargeable battery includes a positive electrode tab and a negative electrode tab that are electrically coupled to the electrode assembly and that protrude outwardly from the pouch case, and the corner folding portion is formed at a corner of an end portion of the pouch case that is opposite to an end portion from which the positive and negative electrode tabs protrude.

5. The rechargeable battery of claim **1**, wherein the first bent portion is attached to a lateral side of the receiving portion.

6. The rechargeable battery of claim **5**, wherein the first bent portion is attached to the lateral side of the receiving portion through an adhesive layer between the receiving portion and the first bent portion.

7. The rechargeable battery of claim **1**, wherein a width of the second bent portion is greater than a width of the first bent portion.

8. The rechargeable battery of claim **7**, wherein the width of the second bent portion is 1.1 to 1.3 times the width of the first bent portion.

9. The rechargeable battery of claim **7**, wherein a width of the corner folding portion is less than the width of the first bent portion.

10. The rechargeable battery of claim **9**, wherein the width of the corner folding portion is 0.5 to 0.8 times the width of the first bent portion.

* * * * *