UNITED STATES PATENT AND TRADEMARK OFFICE

BEFORE THE PATENT TRIAL AND APPEAL BOARD

ZOOM COMMUNICATIONS, INC.
Petitioner

v.

RICOH COMPANY, LTD.
Patent Owner

IPR2026-00411

PETITION FOR INTER PARTES REVIEW
OF U.S. PATENT NO. 11,256,464

TABLE OF CONTENTS

Page

I. INTRODUCTION 1

II. TECHNOLOGY BACKGROUND 1

A. Sharing Content During Videoconferences Was Well Known 2

B. Dual-Monitor Displays Were Well Known 4

C. Assigning Different Content to Different Monitors Was Well Known 6

III. '464 PATENT 8

A. Overview 8

B. Prosecution History 11

IV. POSITA 12

V. CLAIM CONSTRUCTION 13

VI. OVERVIEW OF CHALLENGE 13

VII. THE ASSERTED GROUNDS OF INVALIDITY 14

A. Ground 1: Watson in View of Nimri Renders Obvious Claims 1-10 14

1. Watson 16

2. Nimri 18

3. Motivation to Combine 19

4. [1.pre] 24

a) [5.pre] 27

b) [9.pre] 28

5. [1.a]/[5.a]/[9.a] 29

TABLE OF CONTENTS
(continued)

Page

6. [1.b]/[5.b]/[9.b] 31

7. [1.c]/[5.c]/[9.c] 33

8. Claims 2/6 40

9. Claims 3/7 42

10. Claims 4/8/10 43

B. Ground 2: Weiser Anticipates and/or Renders Obvious Claims 1-10 49

1. [1.pre] 51

a) [5.pre] 53

b) [9.pre] 55

2. [1.a]/[5.a]/[9.a] 56

3. [1.b]/[5.b]/[9.b] 57

4. [1.c]/[5.c]/[9.c] 59

5. Claims 2/6 66

6. Claims 3/7 67

7. Claims 4/8/10 69

VIII. CONCLUSION 74

IX. MANDATORY NOTICES PURSUANT TO 37 C.F.R. §42.8 74

A. Real Parties-In-Interest under 37 C.F.R. §42.8(b)(1). 74

B. Related Matters Under 37 C.F.R. §42.8(b)(2). 74

C. Lead and Back-up Counsel under 37 C.F.R. §42.8(b)(3). 74

TABLE OF CONTENTS
(continued)

Page

D. Service Information under 37 C.F.R. §42.8(b)(4).....75

X. GROUNDS FOR STANDING.....75

XI. PAYMENT OF FEES 75

XII. STATEMENT OF PRECISE RELIEF REQUESTED 76

TABLE OF AUTHORITIES

Page(s)

Cases

KSR Int'l Co. v. Teleflex Inc.,
550 U.S. 398 (2007) 22, 23

Statutes

35 U.S.C. §102 ..... 11, 12, 13

35 U.S.C. §103 ..... 13, 77

35 U.S.C. §112(b) 11, 12

35 U.S.C. §112(f) 11

Other Authorities

37 C.F.R. §42.8 75

37 C.F.R. §42.15(a) 77

37 C.F.R. §42.103 77

37 C.F.R. §42.104(a) 77

PETITIONER'S EXHIBIT LIST

No.	Reference	Referred To As
1001	U.S. Patent No. 11,256,464	'464 Patent
1002	Prosecution History of U.S. Patent No. 11,256,464	'464 Patent File History
1003	Declaration of Dr. Kevin Almeroth	Almeroth Decl.
1004	UK Patent Application Publication No. GB 2473463 A	Watson
1005	U.S. Patent No. 5,990,931	Nimri
1006	U.S. Patent No. 8,994,778	Weiser
1007	U.S. Patent Application Publication No. 2011/0271211	Jones
1008	U.S. Patent Application Publication No. 2010/0306674	Salesky
1009	U.S. Patent Application Publication No. 2010/0053341	Yi
1010	U.S. Patent Application Publication No. 2012/0154256	Grover
1011	Microsoft Office 2004 Review CNET, *Available at* https://www.cnet.com/reviews/microsoft-office-2004-for-mac-standard-edition-review/y .	Office 2004

LISTING OF CHALLENGED CLAIMS

Claim	Limitation
1.	A communication device connected to an image capturing apparatus, a first display, and a second display, the communication device comprising:
[1.a]	a transceiver to transmit data of a first captured image captured by the image capturing apparatus via a network; and receive data of a second captured image via the network; and
[1.b]	receive data of a third image that is displayed on a display of another communication device via the network, the third image being different than the first captured image and the second captured image; and
[1.c]	a display control circuit configured to control the first display and the second display; and in response to supply of the third image being finished while the first display displays the first captured image and the second captured image and the second display displays the third image, automatically control the first display to display the first captured image and the second captured image and control the second display to display none of the first captured image, the second captured image, and the third image.
2.	The communication device according to claim 1, wherein the third image comprises one of a desktop screen and a user interface of an application program.
3.	The communication device according to claim 1, wherein the third image comprises an image created by using one of word-processing software, spreadsheet software, and presentation software.
4.	The communication device according to claim 1, further comprising: an operation receiving circuit configured to receive an instruction to change between a first display scheme and a second display scheme, wherein according to the first display scheme, the first display is controlled to display the first captured image and the second captured image and the second display is controlled to display none of the first captured image, the second captured image, and the third image, and according to the second display scheme, the first display is controlled to display the first captured image and the second captured image and the second display is controlled to display the third image.

5.	A method implemented by a communication device connected to an image capturing apparatus, a first display, and a second display, the method comprising:
[5.a]	transmitting data of a first captured image captured by the image capturing apparatus via a network; receiving data of a second captured image via the network;
[5.b]	receiving data of a third image that is displayed on a display device of another communication device via the network, the third image being different from the first captured image and the second captured image;
[5.c]	controlling the first display and the second display; and in response to supply of the third image being finished while the first display displays the first captured image and the second captured image and the second display displays the third image, automatically controlling the first display to display the first captured image and the second captured image, and controlling the second display to display none of the first captured image, the second captured image, and the third image.
6.	The method according to claim 5, wherein the third image comprises one of a desktop screen and a user interface of an application program.
7.	The method according to claim 5, wherein the third image comprises an image created by using one of word-processing software, spreadsheet software, and presentation software.
8.	The method according to claim 5, further comprising: receiving an instruction to change between a first display scheme and a second display scheme; in a case that the instruction indicates to change to the first display scheme, controlling the first display to display the first captured image and the second captured image and controlling the second display to display none of the first captured image, the second captured image, and the third image; in a case that the instruction indicates to change to the second display scheme, controlling the first display to display the first captured image and the second captured image and controlling the second display to display the third image.

9.	A non-transitory computer readable medium storing computer executable instructions which, when executed by circuitry of a computer, cause the computer to:
[9.a]	transmit data of a first captured image captured by an image capturing apparatus via a network; receive data of a second captured image via the network; and
[9.b]	receive data of a third image that is displayed on a display of another device via the network, the third image being different than the first captured image and the second captured image; and
[9.c]	control a first display and a second display; and in response to supply of the third image being finished while the first display displays the first captured image and the second captured image and the second display displays the third image, automatically control the first display to display the first captured image and the second captured image and control the second display to display none of the first captured image, the second captured image, and the third image.
10.	The non-transitory computer readable medium according to claim 9, wherein the computer is further caused to: receive an instruction to change between a first display scheme and a second display scheme; in a case that the instruction indicates to change to the first display scheme, control the first display to display the first captured image and the second captured image and control the second display to display none of the first captured image, the second captured image, and the third image; in a case that the instruction indicates to change to the second display scheme, control the first display to display the first captured image and the second captured image and control the second display to display the third image.

I. INTRODUCTION

Petitioner requests *inter partes* review and cancellation of claims 1-10 of U.S. Patent 11,256,464 ("the '464 Patent") (EX1001).

The '464 patent describes nothing more than the application of these well-known concepts—dual-monitor display configurations, content sharing, and assigning different display monitors to different purposes—to the well-known field of video conferencing systems. EX1003, ¶¶28-29, 34, 37. Each of these individual components was thoroughly documented in prior art references well before March 2012, and their combination was well known and alternatively would have been a straightforward, predictable exercise for a person of ordinary skill in the art.

Petitioner therefore respectfully requests institution of *inter partes* review and cancellation of all claims of the '464 Patent.

II. TECHNOLOGY BACKGROUND

The '464 patent generally relates to a communication device for video conferencing that controls the display of captured video images and shared material content across multiple display devices such that a first display device shows images of local and remote points while a second display device shows a "material image" supplied from an image supply device. But every aspect of the technology described in the '464 patent was well-known years before the earliest possible priority date of March 22, 2012. EX1003, ¶28.

A. Sharing Content During Videoconferences Was Well Known

Sharing content such as documents, computer screens, and presentation materials during videoconferences was also thoroughly documented in the prior art for more than a decade before the ’464 patent’s priority date. EX1003, ¶29.

Nimri (EX1005) (U.S. Patent No. 5,990,931, issued November 23, 1999) teaches a videoconferencing system in which “[a] first monitor (left monitor) 11 displays a video picture of the far scene (the remote conference site), as captured by a camera at that location” while “[a] second monitor (right monitor) 13 displays ‘still frame images’, such as a computer screen or document.” EX1005, 2:57-61. Nimri explains that “[a] video conference may include supporting materials other than documents,” including “a computer screen display” transmitted “to a larger on-site monitor for audience viewing or to an off-site monitor,” and that “most video videoconferencing systems have at least one means for presenting supporting materials.” EX1005, 1:34-55.

Watson (EX1004) (GB 2473463 A, published March 16, 2011) likewise discloses a collaborative working environment system in which “two visual display units 58, 60 are provided, of which the first 58 presents video conferencing facilities and the second 60 provides shared document viewing facilities.” EX1004, p. 6. Watson’s system enables multiple users to share electronic documents, transmitting

them as rendered bitmaps to "connected parties" over a network. EX1004, pp. 9-10, FIG4.

Jones (EX1007) (U.S. Patent Application Publication No. 2011/0271211, published November 3, 2011) additionally discloses a conferencing system with a "participant view" showing graphical representations identifying conference participants and a "screen sharing view" in which content from one participant's screen is simultaneously presented on other participants' displays, and allowing participants to selectively display either view. EX1007, ¶¶0024, 0029-0030, FIGS2-4.

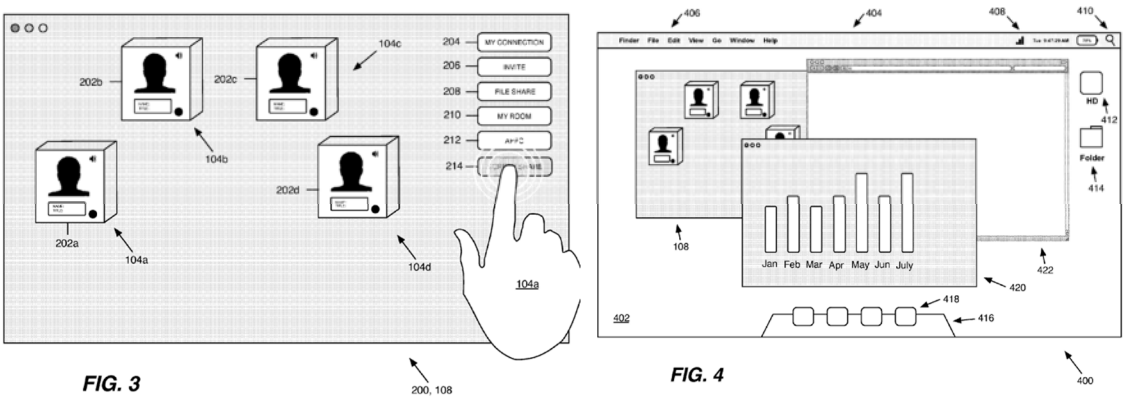

EX1007 FIGS 3, 4

Salesky (EX1008) (U.S. Patent Application Publication No. 2010/0306674, published December 2, 2010) discloses a networked desktop conferencing system in which a presenter selects a display "capture rectangle" to share with remote

attendees, who view the shared content in real time. EX1008, ¶¶0075-0077, FIGS 1, 7A-7B.

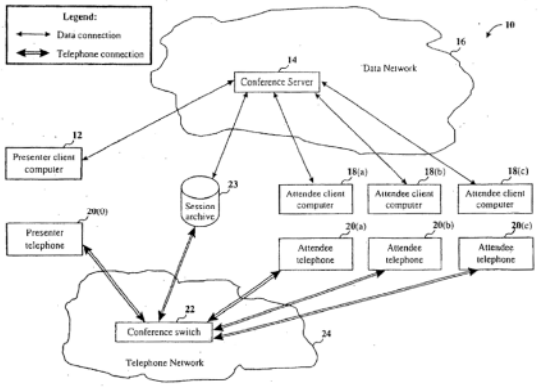

FIG. 1

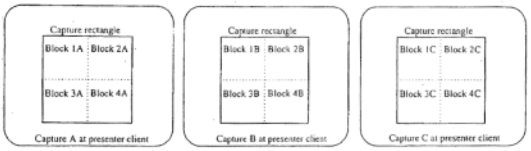

Illustration of the effect of specifying consistency at the server
(other delays in sending assumed to be caused by loading at attendee client)

Time order	Received by server	Sent by server	
		Consistency OFF	Consistency ON
1	Block 1A		
2	Block 2A		
3	Block 3A	Block 1A	Block 1A
4	Block 4A		
5	Block 1B		
6	Block 2B	Block 2A	Block 2A
7	Block 3B		Block 3A
8	Block 4B	Block 3B	
9	Block 1C	Block 4B	Block 4A
10	...	Block 1C	Block 1B
11	...	...	...

FIG. 7B

EX1008 FIGS 1, 7B

Content sharing during video conferences—whether via document stands, screen sharing, or dedicated second monitors—was thus ubiquitous in the prior art. EX1003, ¶¶29-33.

B. Dual-Monitor Displays Were Well Known

The use of dual-monitor displays—in which a computing device simultaneously drives two separate screens to show different content—was a mature, widely deployed technology by the time of the alleged invention. EX1003, ¶34. Personal computers had supported extended desktop configurations with multiple monitors for well over a decade before 2012, beginning with native support in Windows 98 and continuing through every subsequent operating system release. EX1003, ¶34. Dedicated dual-monitor configurations were commonplace not only

in general computing environments but specifically in video conferencing systems. EX1003, ¶34.

For example, Grover (EX1010) (U.S. Patent Application Publication No. 2012/0154256, published June 21, 2012, with priority to August 6, 2010) discloses a visual display system for conference rooms including multiple display devices connected to intermediate computers and a network, in which remote participants can view visual information while conducting video conferences. EX1010, ¶¶0002-0003, 0016, 0019. Specifically, Grover teaches that the conference room may include dedicated video conferencing monitors placed on walls separate from the multi-displays showing shared data — effectively partitioning the room so that one set of displays handles live video of remote participants while another presents collaborative content. EX1010, ¶¶0039, 0010; EX1003, ¶35.

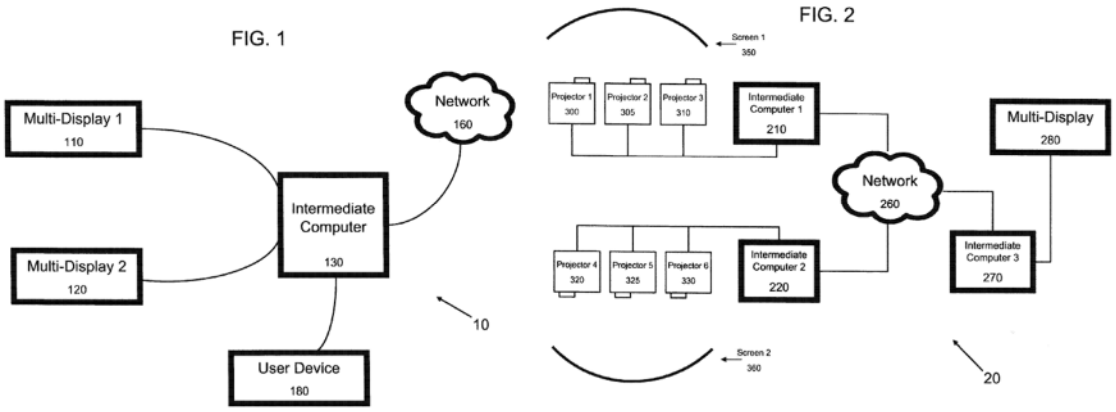

EX1010 FIGS 1, 2

A POSITA would have understood that detecting and managing content across multiple displays in a video conferencing system was routine as of the ’464 Patent priority date. EX1003, ¶36.

C. Assigning Different Content to Different Monitors Was Well Known

Not only was the use of multiple monitors well known, but so, too, was the idea of assigning different purposes to each monitor so that each only displays certain types of images. EX1003, ¶37.

Microsoft PowerPoint’s full-screen presentation mode—in which slides are rendered at full-screen resolution and take over the entire display area of a monitor—was well known years before the ’464 patent’s priority date. EX1003, ¶38. PowerPoint 2004, released in May 2004, included “Presenter Tools”: tools visible to presenter during slide show. EX1011. With Presenter Tools, the presentation slides can appear in full-screen mode on one monitor (visible to the audience) while the presenter sees speaker notes, slide previews, and navigation tools appear on a separate monitor. EX1011.

The ’464 patent’s claims describe a system in which a “third image” (the material image) is displayed on the second display device, and this third image may comprise “an image created by using one of word-processing software, spreadsheet software, and presentation software.” EX1001, Claims 3, 7. The patent specification discloses that an “image supply device” such as a personal computer supplies this

material image to the communication device for display on the second monitor while captured video images remain on the first monitor. EX1001, 3:33-51, 8:25-9:10. This is functionally identical to how PowerPoint Presenter View operates in a dual-monitor environment: the presentation application sends its full-screen output to a designated external display while the user's primary monitor shows other content such as speaker notes and video thumbnails. EX1003, ¶39. This concept was not merely known in the abstract—it was the standard operating procedure for PowerPoint users conducting presentations at their desks and in conference rooms every day, using a feature available since at least May 2004, nearly a decade before the '464 patent's priority date. EX1011; EX1003, ¶38.

Similarly, Yi (EX1009) (U.S. Patent Application Publication No. 2010/0053341, published March 4, 2010) discloses a "video presenting system having outputs for dual images" in which the system "can respectively and simultaneously output any two different images to two different display units," with a first display member showing one image and a second display member showing a different image. EX1009, Abstract, ¶¶0003, 0005, 0008. The Yi system sends a live image signal to one display and a document or multimedia image to the other. EX1009, ¶¶0035-0036, 0049.

FIG. 3

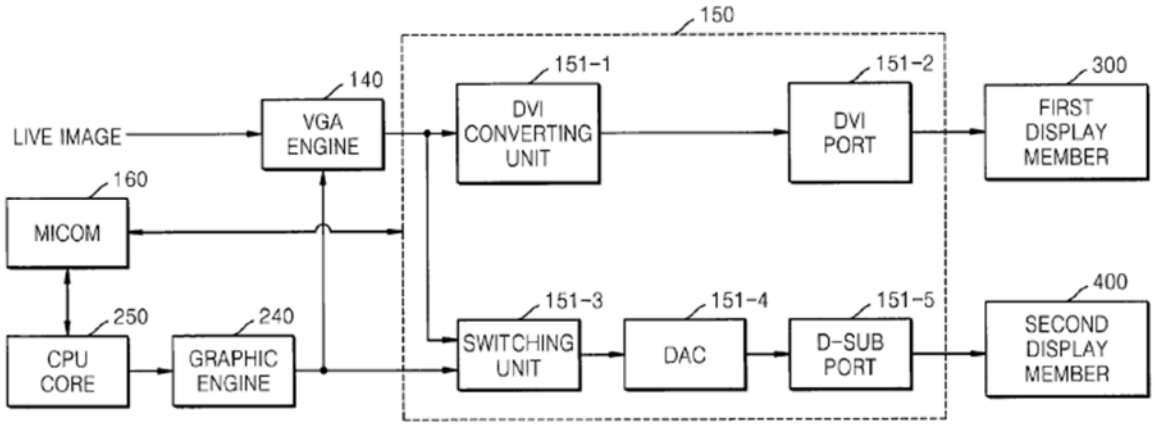

EX1009 FIG3

III. '464 PATENT

A. Overview

The '464 Patent is directed to a communication system and device for multi-point image and audio communication that allegedly improves the visibility and usability of displayed content during video conferences. EX1001, 1:21-25, 49-61; EX1003, ¶41. The '464 Patent purports to address a problem in systems that present multiple streams—such as local and remote camera feeds and shared content—on limited screen real estate in ways that reduce visibility. EX1001, 1:40-43, 47-49; 12:20-22; EX1003, ¶41. The patent proposes coordinated display control so captured images and shared content are presented in arrangements that allegedly enhance visibility. EX1001, Abstract, FIGs 5-9; 7:1-31; EX1003, ¶41.

In one embodiment, a first display shows captured images of the local and remote sites, while a second display shows an image supplied from an image supply device at either site (e.g., a desktop, an application's user interface, or a presentation.) EX1001, 3:33-51, FIGs 6-8; EX1003, ¶42.

The communication device includes a CPU, ROM, RAM, SSD, and media drive connected via a data bus, along with interfaces for networking, image capturing, audio input/output, and multiple display devices. EX1003, ¶43.

FIG.2

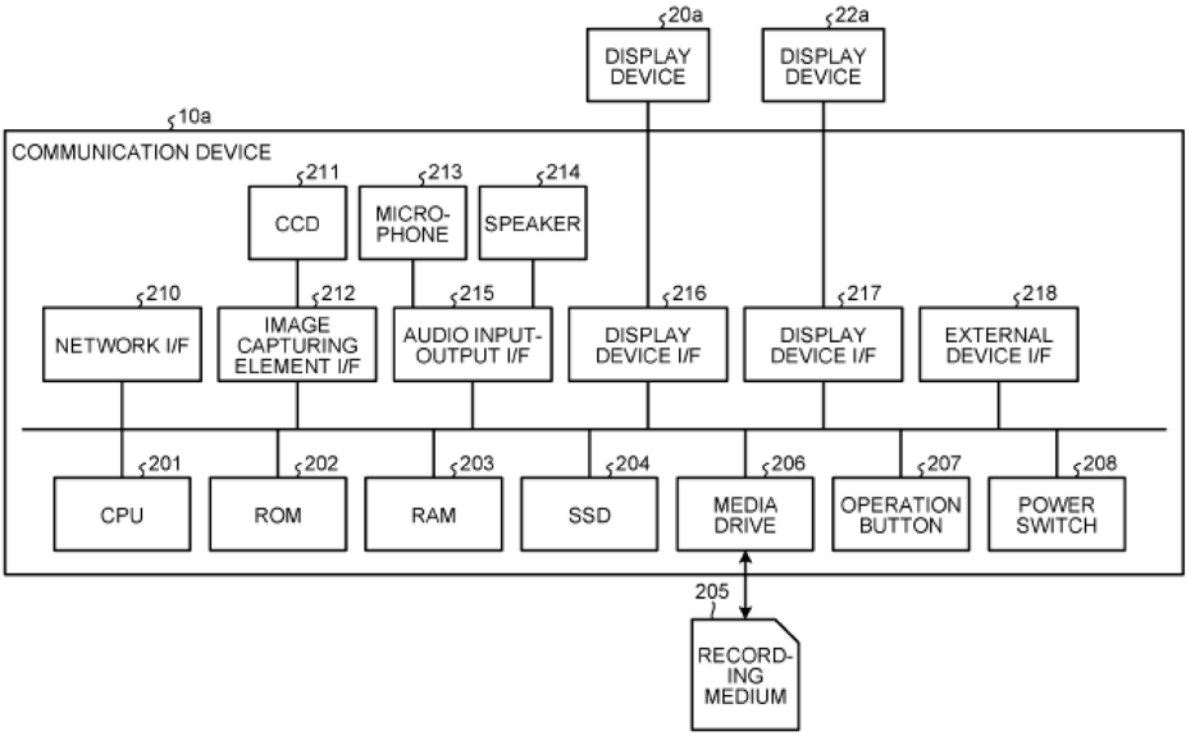

The '464 Patent teaches predetermined screen divisions and arrangement information tables for different connection states and modes. EX1001, 5:48-56; 7:32-11:20; FIGs 5-9; EX1003, ¶44. With two displays, camera feeds appear on the

first display, and the shared image appears on the second. EX1001, 8:66-9:57, FIGs 6-9; EX1003, ¶44. The system supports switching between a camera-focused scheme (VIEW_MULTI) and a scheme that includes the shared content (SHARED_MULTI) either by user action or automatically when sharing starts or stops. EX1001, 7:52-8:11, 9:24-36; EX1003, ¶44. When an image supply device stops sharing on the second display, the system clears that image from the second display while maintaining the local and remote captured images on the first display. EX1001, 8:5-21; EX1003, ¶44.

FIG.7

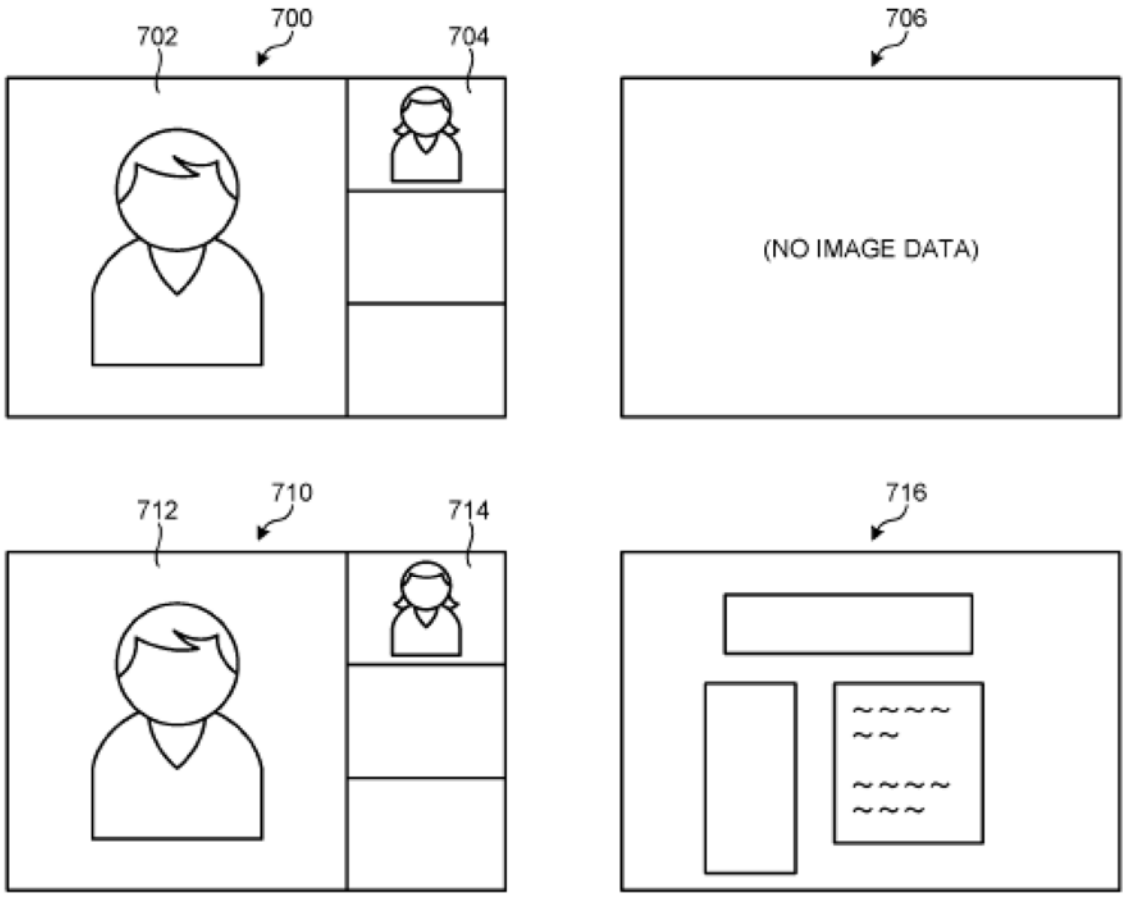

B. Prosecution History

U.S. Patent Application No. 16/904,807 was filed on June 18, 2020, as a continuation of U.S. Patent Application No. 15/595,574, filed on May 15, 2017, which is itself a continuation of U.S. Patent Application No. 13/828,391, filed on March 14, 2013. EX1001. The application was initially filed with nine claims. EX1002, 8-10. On August 31, 2020, the Applicant filed preliminary amendments cancelling claims 1-9 and adding claims 10-15. EX1002, 60-61; EX1003, ¶45.

In a Non-Final Office Rejection dated July 8, 2021, the Examiner rejected the pending claims under 35 U.S.C. §112(b) and interpreted certain claim language under 35 U.S.C. §112(f). EX1002, 91-94. The Examiner also rejected all pending claims as anticipated by U.S. 6,025,871 ("Kantor") under 35 U.S.C. §102. EX1002, 94-96. On October 5, 2021, the Applicant amended claims 10-15 and added new claims 16-19. EX1002, 143-145. The amendments to claims 10-15, among other things, defined a "third image" as distinct from the first and second captured images and recited control logic for the first and second displays. EX1002, 143-145. New claims 16-19 added selectable display schemes via an operation receiving circuit (device claim 16), the corresponding method (claim 17), and a computer-readable medium implementing the same functional behavior (claims 18-19). EX1002, 145-147. In the Remarks, the Applicant contended that no new matter was introduced with claims 16-19, the pending claims did not invoke 35 U.S.C. §112(f), and that the

§112(b) rejection of claims 10-15 were rendered moot by the amendments. EX1002, 150-151. The Applicant further argued that the §102 rejection was overcome because Kantor does not describe or reasonably suggest a display circuit configured to automatically control the first and second display in response to the supply of the third image being finished. EX1002, 150-154; EX1003, ¶46.

On October 22, 2021, the Examiner issued a Notice of Allowance indicating that all pending claims were allowed for the reasons set forth on pages 8-10 of the Applicant's October 5, 2021, Remarks. EX1002, 166-170. The Examiner did not provide any additional reasons for allowance. The Notice also reflected a minor amendment to claim 16 made by the Examiner and noted that the U.S. 8,264,519 (Lunde) was considered prior art of record pertinent to the applicant's disclosure by the Examiner, but was not relied upon. EX1002, 169-170; EX1003, ¶47.

IV. POSITA

A person of ordinary skill in the art ("POSITA") relevant to the '464 Patent as of March 22, 2012, would have had at least: (1) a bachelor's degree in electrical engineering, computer science, computer engineering, or equivalent coursework, with at least two years of work experience in video communication systems, multi-display management, or networked multimedia applications; or (2) a master's degree in electrical engineering, computer science, computer engineering, or equivalent coursework, with coursework or research focused on video conferencing systems,

display technologies, or multimedia communications. An individual with additional education could have less practical experience, and vice versa. EX1003, ¶48.

V. CLAIM CONSTRUCTION

Petitioner contends that no constructions are necessary for determining whether the prior art meets the limitations of the challenged claims. EX1003, ¶49.

VI. OVERVIEW OF CHALLENGE

Petitioner requests cancellation of claims 1-10 as set forth below:

Ground	Claims	Statutory Basis	Reference(s)
1	1-10	§103	Watson in view of Nimri
2A/2B	1-10	§§102/103	Weiser

The application that issued as the ’464 patent was filed on June 18, 2020, and is a continuation of an application filed on March 14, 2013, which claims priority to a Japanese application filed on March 22, 2012. Petitioner’s challenge is based on the following references, which are prior art under 35 U.S.C. §102 (pre-AIA). None of these references were considered or cited during prosecution of the ’464 Patent.

Exhibit	Reference	Date(s)	Availability as Prior Art
EX1004	UK Patent Application Publication No. GB 2473463 A (“Watson”)	Filed Sep. 10, 2009; Published Mar. 16, 2011	§§102(a), 102(b)
EX1005	U.S. Patent No. 5,990,931 (“Nimri”)	Filed Apr. 9, 1997; Issued Nov. 23, 1999	§§102(a), 102(b)
EX1006	U.S. Patent No. 8,994,778 (“Weiser”)	Filed Dec. 7, 2011; Issued Mar. 31, 2015	§102(a), 102(e)

VII. THE ASSERTED GROUNDS OF INVALIDITY

A. Ground 1: Watson in View of Nimri Renders Obvious Claims 1-10

Watson in view of Nimri renders obvious Claims 1-10. Watson provides the foundational dual-display architecture (VDU 1 permanently dedicated to video conferencing, VDU 2 permanently dedicated to shared documents) and the display control circuit (CWE master 54 and CWE slave 56). EX1003, ¶57. Watson does not, however, explicitly disclose the automatic display control that occurs "in response to supply of the third image being finished." However, a POSITA would have understood that there are a finite number of reasonable options once presentation content is finished—e.g., the area that displayed the content can be made blank, can continue to display the last frame of the content (though this risks user confusion), or can display a message/indication that display of the content is finished. EX1003, ¶58. Watson does not provide implementation details of how to detect and respond to "supply of the third image being finished," thus a POSITA would be motivated to combine Watson with compatible references, in the same field of endeavor, that allow Watson to be extended to implement one of these well-understood options. EX1003, ¶58.

Nimri provides implementation details for one of these well-understood options by teaching automatic content termination detection (processor 23 detecting blank frames or new slides at Step 346, 348, 358 and 352, 356, 362) and automatic

display response (no slide sent or new slide sent, video continues unaffected, camera switching handled automatically). EX1005, FIG3B; EX1003, ¶59.

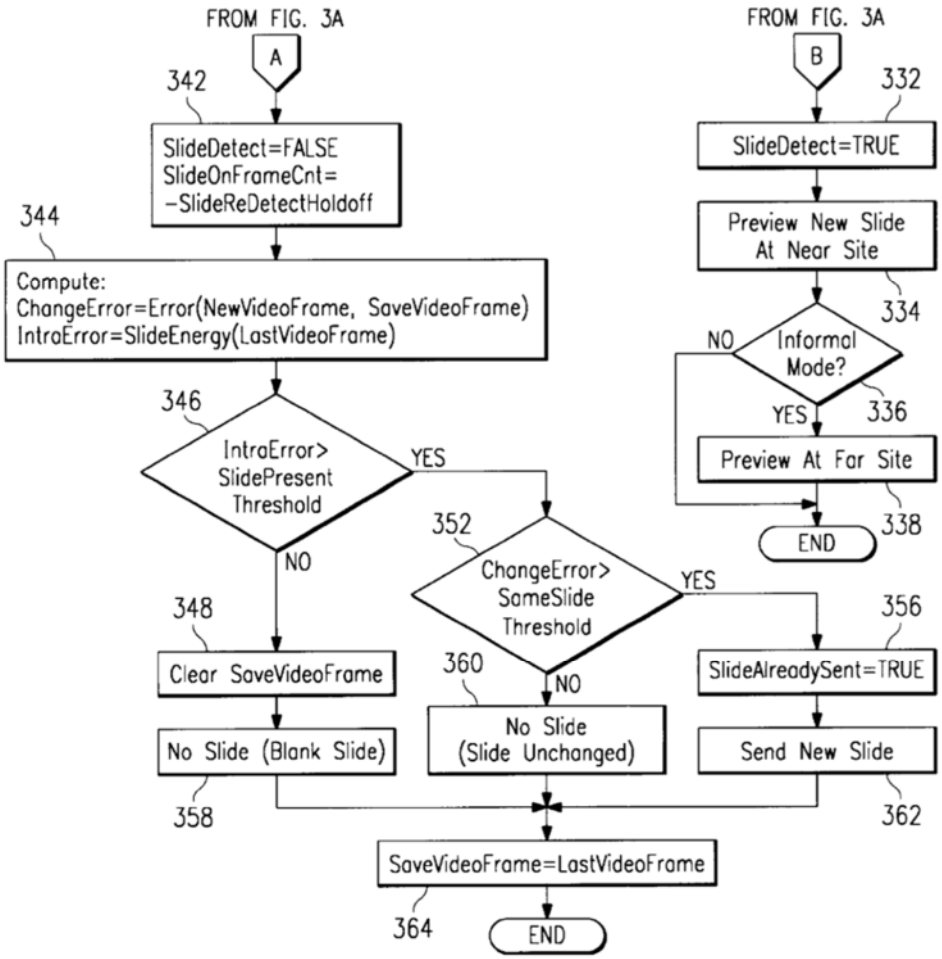

FIG. 3B

As explained below, a POSITA would have been motivated to combine these references because they are in the same field of endeavor, Nimri directly solves a problem that Watson's system faces (implementation of a feature to address stale content remaining on the second display after sharing ends), Nimri identifies the motivation for automatic display management (avoiding unprofessional stale

content/explaining what happens when sharing ends), and the combination is a predictable application of known techniques to yield predictable results. EX1003, ¶¶60-61.

1. Watson

Watson's collaborative working environment system discloses a communication device (workstation 50) with a camera (64), two permanently dedicated displays (VDU 1 for video conferencing, VDU 2 for shared documents), a network connection via the internet, and a display control architecture that assigns video conferencing content exclusively to VDU 1 and shared document content exclusively to VDU 2. EX1003, ¶62. In view of Watson's system architecture, a POSITA would not move the video conference to VDU 2 because the work pad is purpose-built for stylus-based document interaction, not video viewing, and a POSITA would not move shared documents to VDU 1 because the CWE slave driving that display is architecturally separate and exclusively manages video conferencing. EX1003, ¶62.

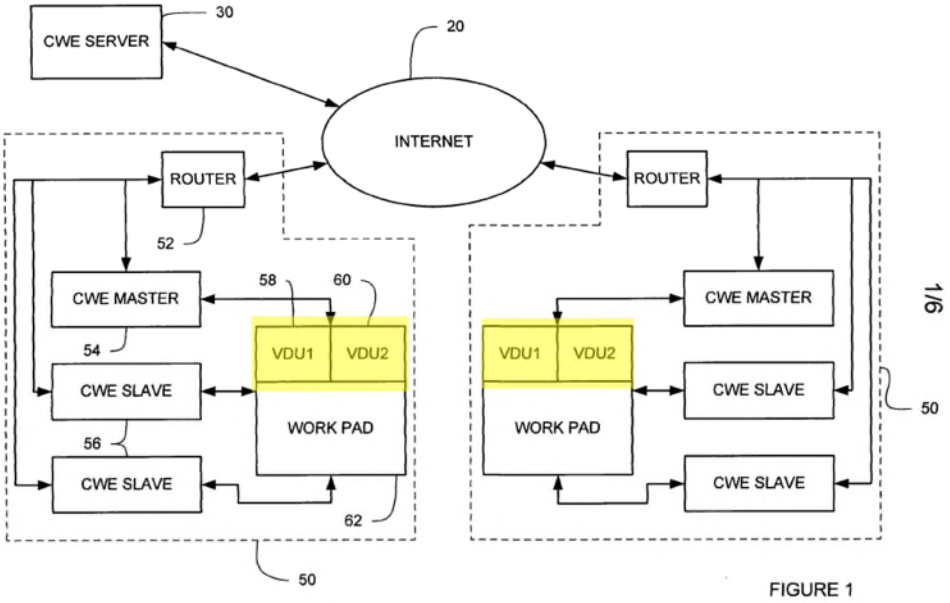

Claim 3/7 is satisfied because Watson discloses sharing documents created in Microsoft Word (word-processing software) and references the Microsoft Office suite, which includes spreadsheet and presentation software, rendered through a universal print-to-bitmap process applicable to "any application which supports printing." EX1003, ¶63. Regarding claim 4/8/10, Watson's system includes input processing hardware and software (the CWE master, CWE slave, work pad, and pointing devices) that receive user instructions to add documents to the workspace (Figure 4), and in combination with Nimri, discloses display states where VDU 2 displays no shared content (or new shared content) and a state where VDU 2 displays the shared document image 3—all while VDU 1 continuously displays the video conference. EX1003, ¶64.

2. Nimri

Nimri's videoconferencing station 10 discloses a communication device with camera 12, two permanently dedicated monitors (monitor 11 for live video, monitor 13 for still frame images), bidirectional network communication with a remote station (having a similar setup), and processor-based display control that routes video to the first display and document content to the second display. EX1003, ¶65. Nimri explains that a video conference may include sharing materials such as documents and "a computer screen display." EX1005, 1:34-40, 1:43-49, 3:46-50.

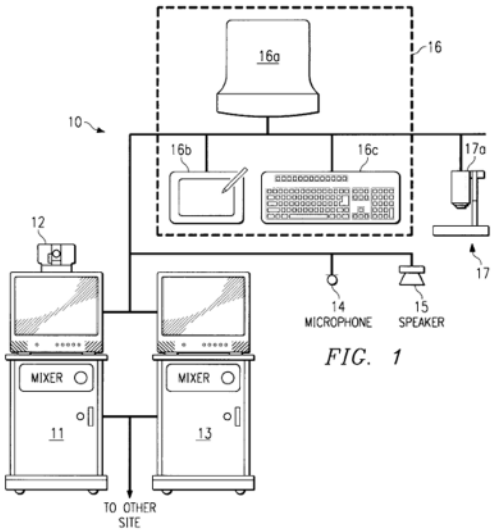

FIG. 1

A POSITA would not move the live video conference to monitor 13 because that monitor has a dedicated purpose for presentation content, and a POSITA would not display still frame content on monitor 11 because the system's processor 23 is programmed to direct slide commands exclusively to monitor 13. EX1003, ¶66. When the document is removed from presentation and Nimri's processor detects a

blank frame (Step 348), no slide is sent—the third image supply has "finished." EX1003, ¶67. At that point, monitor 13 displays none of the captured images or the third image (because it never displays video and no slide is present), while monitor 11 continues displaying video of the meeting participants exactly as it always has. EX1003, ¶67. Likewise, if a new document replaces the document corresponding to the third image, Nimri's processor detects it (Step 352) and sends a new image (Step 362), stopping supply of the "finished" third image. EX1003, ¶68. These transitions are automatic because Nimri's invention is directed to eliminating manual control of the slide presentation process. EX1003, ¶68.

3. Motivation to Combine

A POSITA would have been motivated to incorporate Nimri's automatic detection of content termination and automatic display adjustment into Watson's similar dedicated dual-display collaborative working environment for several independently sufficient reasons identified below and within the claim analysis section.

Same Field of Endeavor: Watson and Nimri are in the same field of endeavor: both are directed to dual-display videoconferencing systems that show live video on a first monitor and shared document content on a second monitor. EX1003, ¶70. Watson discloses "two visual display units 58, 60 … of which the first 58 presents video conferencing facilities and the second 60 provides shared

document viewing facilities." EX1004, p. 6. Nimri discloses "[a] first monitor (left monitor) 11 displays a video picture of the far scene … A second monitor (right monitor) 13 displays 'still frame images', such as a computer screen or document." EX1005, 2:57-61. **The architectural similarity is striking: both systems permanently dedicate one display to video and another to shared documents.** EX1003, ¶70. A POSITA designing a dual-display videoconferencing system would have naturally looked to both references. EX1003, ¶70.

Nimri Solves a Problem That Watson's System Faces: Watson's system faces a fundamental usability problem that Watson does not address: implementation details for determining what VDU 2 displays when the remote party stops sharing documents. Watson discloses sharing documents via bitmap tile transmission (Figure 4), but Watson does not describe an implementation for determining what happens at the local workstation's display when sharing ends. EX1003, ¶71. Without an automatic mechanism to detect that the content supply has terminated and to respond by updating the display, the local workstation's VDU 2 could show stale document tiles indefinitely—tiles that Watson itself acknowledges are "no longer being current." EX1004, p. 12. A POSITA would have understood that there are a limited number of options of what to do with the document when sharing ends. EX1003, ¶71. For example, a POSITA would recognize that one option is to remove the document from the monitor when sharing of the document has ended. EX1003,

¶71. Another option is to leave the document on the monitor even though the presentation regarding that document has ended. EX1003, ¶71. It would have been obvious to a POSITA to remove the document from the monitor when sharing has ended, as Watson acknowledges the problem of tiles "no longer being current." EX1004, p. 12; EX1003, ¶71. This is further obvious in view of Nimri. EX1003, ¶72.

Nimri's disclosure contains these details. EX1003, ¶72. Nimri identifies the same type of concern—the audience continuing to view stale content after a presentation has ended—and provides the solution: automatic detection of content termination (blank frame detection or new slide detection) followed by automatic display adjustment (no slide sent, camera switched back or new slide sent). EX1005, 2:6-14; 7:2-6. Nimri's automatic detection applies not only to physical documents but also to "computer screen display[s]" and "computer display signal[s]." EX1005, 1:34-40; 3:46-50; 4:25-27; EX1003, ¶72. A POSITA would have been motivated to incorporate Nimri's automatic termination detection into Watson's receiving workstation to ensure that VDU 2 is automatically cleared or updated when the remote party stops sharing, rather than leaving stale tiles on the display. EX1003, ¶72.

Nimri's Own Motivation: Avoiding Stale Content and Maintaining Professionalism: Nimri provides the motivation for automatic display management

when content sharing ends. Nimri identifies the problem: when the presenter moves on to another subject after presenting a document, "the audience views a still slide and a video slide of the same document with no view of the presenter, which can spoil the effect of an otherwise professional presentation." EX1005, 2:25-29. Without some mechanism for stopping display of stale content, this concern similarly applies to Watson's system: if VDU 2 continues displaying a document tile after the sharing session has ended, the receiving user views outdated content that no longer corresponds to the current state of the session. EX1003, ¶73. A POSITA would have recognized that incorporating Nimri's mechanism for automatic display clearing/updating into Watson's system would solve this problem, ensuring that VDU 2 shows current content when sharing is active and does not show that particular content when sharing has ended. EX1003, ¶73.

Predictable Combination of Known Elements: The combination of Watson and Nimri is the predictable use of known prior art elements according to known methods to yield predictable results. *KSR Int'l Co. v. Teleflex Inc.*, 550 U.S. 398, 415-421 (2007). Watson teaches a dual-display videoconferencing system with a dedicated display architecture (VDU 1 for video, VDU 2 for documents) and a document sharing mechanism (bitmap tile transmission and removal). EX1003, ¶74. Nimri teaches automatic detection of content termination (blank frame or new frame detection by processor 23) and automatic display response (ceasing to display stale

content while maintaining the live video feed) for either paper documents or computer display signals. EX1005, 1:34-40; 3:46-50; 4:25-27. Incorporating Nimri's automatic detection and response into Watson's local workstation yields the entirely predictable result: when the remote party stops sharing documents, the local workstation's processor automatically detects the absence of incoming shared content and automatically updates VDU 2, while VDU 1 continues showing the video conference. EX1003, ¶74.

Using a Known Technique to Improve a Similar Device in the Same Way: The combination is further supported under *KSR* as using a known technique (Nimri's automatic blank-frame/new slide detection and display updating) to improve a similar device (Watson's dual-display collaborative working environment) in the same way (automatically managing the second display when shared content is no longer available). *KSR*, 550 U.S. at 417. A POSITA would have had a reasonable expectation of success because Watson's system already monitors the shared workspace by periodically generating rendered image data and determining differences using "a bitwise logical XOR operation." EX1004, Claims 10-13; EX1003, ¶¶75-76. Importantly, Nimri's processor 23 is not limited to document stand camera signals but expressly receives "a computer display signal, i.e., a VGA signal" (EX1005, 4:25-27), and Nimri's FIGS3-4 process is expressly enhanced "for presenting computer screens." EX1005, 7:56-63; EX1003, ¶76. Nimri

also determines differences, using a subtraction operation that is mathematically equivalent to XOR. EX1005, 5:33-49; EX1003, ¶77. Nimri uses this difference to determine whether they exceed a "SameSlide Threshold," (Step 352) and if so, determines that the document corresponding to the third image has been replaced, and sends a new slide corresponding to that new document. (Step 362). EX1003, ¶77. This results in the third image being removed from the recipient's monitor and replaced with a new image corresponding to the new document. EX1005, 3:56-58, 7:10-16, FIG3B.

Adapting Watson's periodic monitoring mechanism to incorporate Nimri's approach—detecting when the number of changes (which Watson already detects) exceeds a threshold indicating that the document has been replaced—would have been a straightforward software modification well within ordinary skill. EX1003, ¶78.

4. [1.pre]

To the extent the preamble is limiting, Watson discloses it. Watson describes a **user subnetwork (workstation) 50** that constitutes a communication device. EX1004, p. 6, FIGS1-2. The workstation 50 includes a CWE master 54 and CWE slave computers 56, which collectively function as a single communication device that accesses the internet by means of a router 52. EX1004, p. 6-7; EX1003, ¶¶79-80. Watson states that "if a single computer can be provided with such capabilities,

there is no obstacle in the present embodiment to such an implementation." EX1004, p. 6. A POSITA would have understood Watson's workstation 50 to be a single communication device regardless of whether it is implemented using multiple computing units or a single combined unit. EX1003, ¶80.

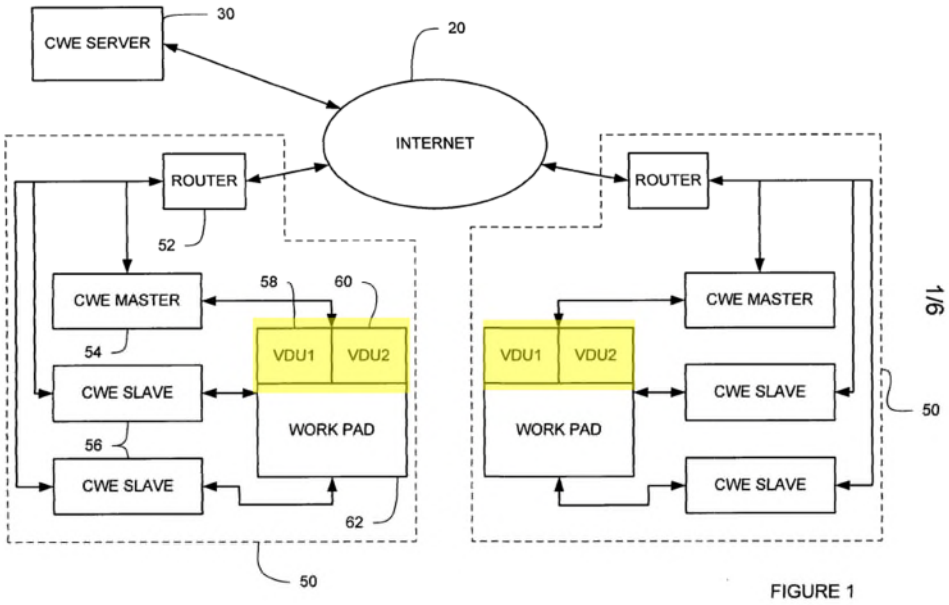

Watson's workstation 50 is connected to a **camera 64** that captures video of the local user. EX1003, ¶81. Watson states: "A camera 64, detecting a view of the user of the workstation 50 feeds back a signal to the computing devices 54, 56." EX1004, p. 8. This camera 64 constitutes the claimed "image capturing apparatus." EX1003, ¶81.

Watson further discloses that the workstation 50 is connected to two visual display units: "**two visual display units 58, 60** are provided, of which the first 58

presents video conferencing facilities and the second 60 provides shared document viewing facilities."[1] EX1004, p. 6. VDU 1 (element 58) is a "conventional unit, such as a flat screen monitor." EX1004, p. 7. VDU 2 (element 60) "comprises a projector which projects an image onto an electrostatic work pad 62 which defines a large drawing board style surface suitable for the formation of an image thereon or viewing by a user." EX1004, p. 7. VDU 1 corresponds to the "first display" and VDU 2 corresponds to the "second display" of Claim 1. EX1003, ¶82.

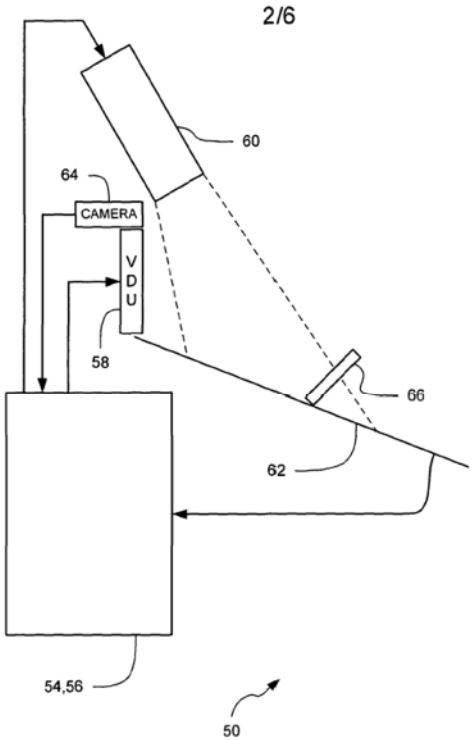

FIGURE 2

[1] All emphasis is added unless otherwise noted.

Watson thus discloses a communication device (workstation 50) connected to an image capturing apparatus (camera 64), a first display (VDU 1, element 58), and a second display (VDU 2, element 60). EX1004, pp. 6-8, FIGS1-2; EX1003, ¶¶83-84.

a) [5.pre]

Watson discloses a method implemented by its workstation 50 (communication device). EX1003, ¶¶85-86. Watson's workstation 50 is a computer-based system that executes software for the collaborative work environment and manages video conferencing. EX1004, p. 7. The CWE master 54 "executes software for the collaborative work environment, such as for the management of electronic documents shared with other users with which conferencing communication is established." EX1004, p. 6. The CWE slave 56 "manages video conferencing." EX1004, p. 6. The execution of these software programs by the computing devices within workstation 50 inherently constitutes performance of a method. EX1003, ¶86. A POSITA would have understood that any apparatus that performs functional operations through software execution necessarily performs the steps of a method. EX1003, ¶86.

Watson's computing devices (CWE master 54 and CWE slave 56) perform the steps of controlling VDU 1 and VDU 2 through execution of their respective software programs. EX1003, ¶87. The permanent architectural dedication of VDU 1

to video conferencing and VDU 2 to shared document viewing—where video conferencing content would not be moved to VDU 2 and shared documents are not displayed on VDU 1—constitutes performance of the method step of "controlling the first display and the second display." EX1004, p. 6-7. The automatic response to the third image supply being finished—in view of Nimri's disclosure discussed below—is likewise performed as a method step by Watson's system. EX1003, ¶¶87-88.

b) [9.pre]

Watson discloses a non-transitory, computer readable medium. EX1003, ¶¶89-90. Watson's workstation 50 comprises computer apparatus including the CWE master 54 and CWE slave computers 56 that execute software. EX1004, p. 7. The CWE master 54 "executes software for the collaborative work environment," and the CWE slave 56 executes software that "manages video conferencing." EX1004, p. 7. Watson thus discloses a non-transitory, computer readable medium storing executable instructions that, when executed by a processor (circuitry of a computer), cause the computer to perform the described operations. EX1003, ¶90.

A POSITA would have understood that Watson's computing devices 54, 56 necessarily include non-transitory, computer readable storage media (such as hard disk drives, ROM, flash memory, or other persistent storage) from which the CWE software and video conferencing software are loaded and executed. EX1003, ¶91.

The computer executable instructions stored on Watson's non-transitory medium, when executed by the processors of the CWE master 54 and CWE slave 56, in combination with Nimri, cause the computer to perform the same display control operations described in the claim: permanently dedicating VDU 1 to video conferencing and VDU 2 to shared document viewing, and automatically removing shared document tiles when the document sharing session ends. EX1003, ¶¶92-93.

5. [1.a]/[5.a]/[9.a]

Watson discloses this element. Watson's workstation 50 establishes a video conferencing stream over the internet. EX1003, ¶¶94-95. Watson explains that "the camera 64 is combined with a microphone in order to allow a video conferencing stream to be established." EX1004, p. 8. The CWE slave 56 "manages video conferencing, and thus displays video conferencing images at VDU 1 (58) and associated audio, and receives respective signals from a camera and microphone." EX1004, p. 6-7. The camera 64 captures a view of the local user, and this captured image is transmitted via the internet to the remote workstation as part of the bidirectional video conferencing stream. EX1004, p. 8.

Watson's system transmits the locally captured video image via a network. EX1003, ¶96. Watson describes that the CWE server 30 "establish[es], when requested, conferencing communication between two user devices" over a network 10 "implemented making use of the existing infrastructure of the internet 20."

EX1004, pp. 5-6. Communication between the CWE master and slaves is established "by means of internet connection," with the CWE master 54 "providing principal communication with the CWE server 30" and ensuring that "as viewed from the CWE server 30, the user subnetwork has a single processing presence." EX1004, p. 6. The video captured by camera 64 at the local workstation—the "first captured image"—is thus transmitted via the network to the remote workstation. EX1003, ¶96.

Watson also discloses receiving a second captured image via the network. EX1003, ¶97. Because Watson establishes bidirectional video conferencing between two workstations over the internet, the local workstation necessarily receives the captured video image of the remote user. EX1004, p. 6; EX1003, ¶97. Watson states that VDU 1 "presents video conferencing facilities," which includes displaying the received video image of the remote party. EX1004, p. 6. The remote workstation has its own camera that captures the remote user's image and transmits it via the internet to the local workstation. EX1004, p. 8. Video conferencing by definition requires bidirectional transmission and reception of captured video images. EX1003, ¶97. The CWE slave 56 that "manages video conferencing" necessarily receives the remote user's captured image over the network and displays it on VDU 1 alongside the local user's self-view. EX1004, p. 7. This received image constitutes the "second captured image" received via the network. EX1003, ¶97.

The CWE slave 56, CWE master 54, and router 52, operating in combination, function as the claimed "transceiver" because they collectively transmit and receive image data over the internet. EX1004, pp. 6-8, FIGS1-2; EX1003, ¶¶98-99.

6. [1.b]/[5.b]/[9.b]

Watson discloses this element. Watson describes a collaborative working environment in which electronic documents are shared between workstations. EX1003, ¶¶100-101. The CWE master 54 "executes software for the collaborative work environment, such as for the management of electronic documents shared with other users with which conferencing communication is established." EX1004, p. 6. Watson's system enables a computer apparatus that stores electronic documents to "render data defining an image of a workspace in a windowing graphical user interface, and to offer said rendered image data for downloading to further computer apparatus." EX1004, Abstract, Claim 1.

The process of sharing a document is described in Watson's Figure 4. EX1003, ¶102. When a document is to be added to the CWE, the hosting workstation creates a print request, sends it to a dummy printer driver, converts the document into a postscript file, converts the postscript file to a series of bitmaps, assembles and compresses a tiled image, and finally "transmit[s] compressed tiled image data to connected parties." EX1004, p. 9, FIG4, Steps S2-S14; EX1003, ¶102.

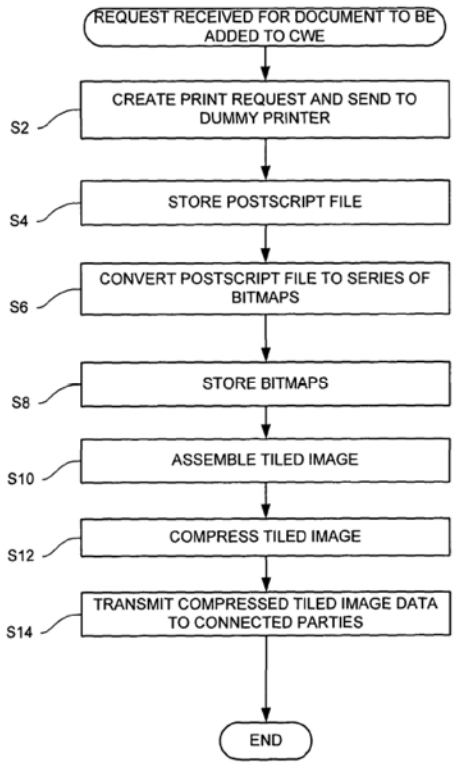

FIGURE 4

This shared document image is displayed on the workspace of the remote workstation (VDU 2) before being transmitted. EX1003, ¶103. Watson states: "a tile 72 represents a view of a document, such as can be opened by the Microsoft Word™ application." EX1004, p. 8. The shared document image constitutes the "third image" that is "displayed on a display of another communication device"—it is rendered and displayed on the workspace of the remote workstation before being transmitted via the network to the local workstation. EX1004, pp. 8-10, FIG4; EX1003, ¶103.

Watson further discloses that the third image is "different than the first captured image and the second captured image." EX1003, ¶104. The shared

document image is a bitmap rendering of a document file—such as a Microsoft Word document—not a video capture from any camera. EX1004, p. 9 (converting postscript file to bitmaps); EX1003, ¶104.

Watson also discloses that the system "periodically generate[s] said rendered image data" and determines differences between successive versions using "a bitwise logical XOR operation," transmitting only the differences to connected parties. EX1004, Claims 10-13; EX1003, ¶105. After editorial changes are made and transmitted, "display updates are then transmitted back to the other connected parties to ensure that the image at the shared application is synchronised at all connected parties." EX1004, p. 11. This confirms that the third image data is continuously received via the network. EX1003, ¶¶105-106.

7. [1.c]/[5.c]/[9.c]

Limitation [1.c]/[5.c]/[9.c] essentially means that when the supply of image 3 is finished, image 3 is removed from display B, and the images 1 and 2 remain where they already are—on display A. The concept of removing an image when the device that is sharing it is "finished" is not a novel concept, nor is the idea of leaving images on the monitor where they are already being displayed. EX1003, ¶¶107-108. Watson in view of Nimri renders this limitation obvious.

Display Control Circuit: Watson's CWE master 54 and CWE slave 56, as modified to incorporate Nimri's processor-based automatic detection logic,

collectively constitute a "display control circuit configured to control the first display and the second display." EX1004, p. 7; EX1003, ¶109. The CWE slave controls VDU 1 for video conferencing, and the CWE master controls VDU 2 for shared documents. EX1003, ¶109. In the combined system, the CWE master further incorporates automatic detection logic—derived from Nimri's processor 23 blank-frame detection (Steps 346-348) and change detection (Steps 352, 356, 362)—to monitor whether the shared material has been removed or replaced, and to automatically clear VDU 2, or to replace the image on VDU 2, when it has. EX1005, 7:2-6; EX1003, ¶109.

"In Response to Supply of the Third Image Being Finished": In the combined system, the supply of the third image is "finished" when the remote workstation stops transmitting shared data corresponding to a particular document—for example, when the remote party stops sharing, disconnects from the collaborative workspace or replaces the document to be shared. EX1003, ¶110. At that point, the local workstation's modified CWE master detects the absence of incoming shared content or change in shared content, using Nimri's automatic detection principle. EX1003, ¶110. In Nimri's system, this is detected by processor 23. EX1003, ¶110.

Nimri discloses two different mechanisms where the supply of the third image finishes, and in each case the result is that the third image is no longer displayed on the second monitor of videoconference participants. EX1003, ¶111.

In the first mechanism, Nimri's system detects that a new "slide" has replaced the slide corresponding to the third image (Step 352), and sends a new image to replace the third image (Step 362). EX1003, ¶112. To do this, a ChangeError is computed (Step 344). EX1003, ¶112. ChangeError is computed by, for each pixel, subtracting its value at a second point in time from its value at a first point in time. EX1005, 5:40. This calculation is similar to the way Watson identifies differences between two versions of a document image by performing a bitwise logical XOR operation (which is also subtraction) EX1003, ¶112. Nimri then sums the results of these subtractions for all pixels, and compares it to a SameSlide Threshold. EX1005, 5:28-43. If the sum of the changes is greater than the threshold, then the system decides that something new is supposed to be displayed, and sends a corresponding image to the other conference participants, replacing the third image. EX1003, ¶112.

In the second mechanism, Nimri's system detects that the document to be displayed has been removed, because it detects only a blank image to be processed and transmitted. EX1003, ¶113. Nimri's system detects this blank image by comparing each pixel's value to the average value of all pixels. (Step 344) If the sum of these differences from the average value is less than SlidePresent Threshold (Step 346), then the system decides that there is nothing to be displayed and transmitted (Step 358); in other words, the image is blank. EX1003, ¶113. This results in display of third image being stopped. FIG4, Stop Preview; EX1003, ¶113.

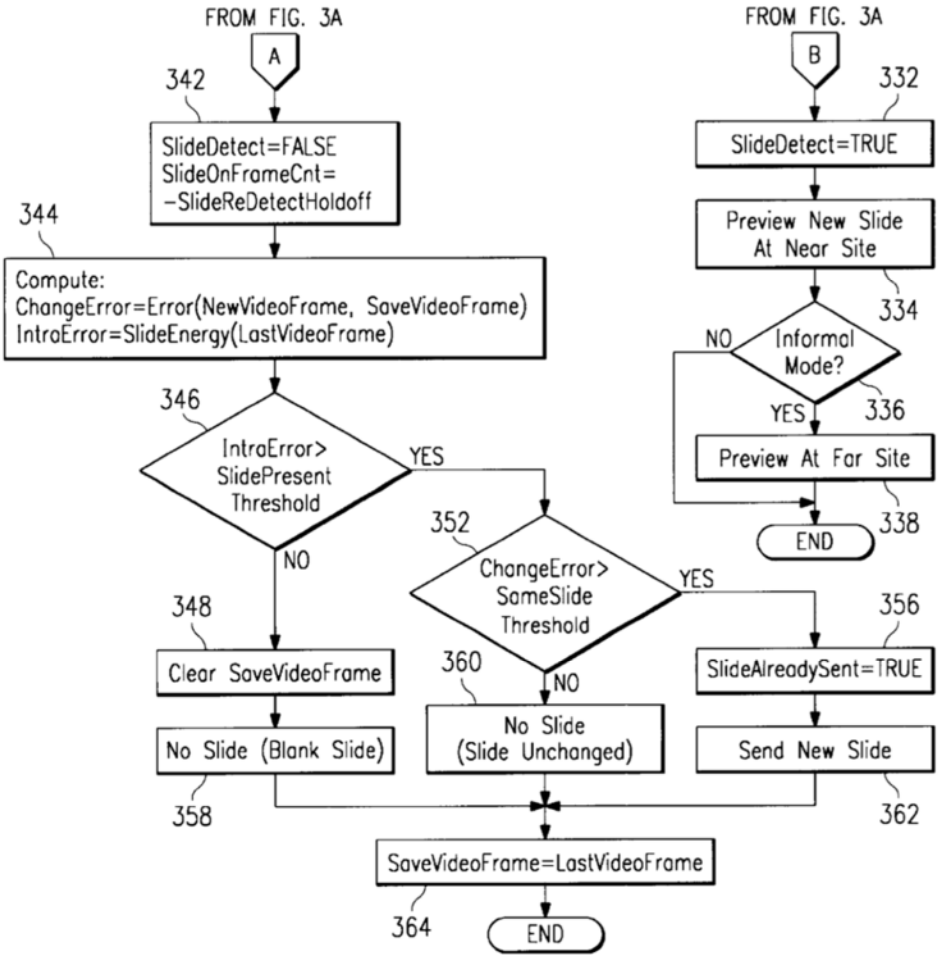

FIG. 3B

Analogously, in the combined system, the CWE master detects that no new tile data is being received or that the workspace image has become empty—indicating that the supply of the third image has ended. EX1003, ¶114. This detection is automatic, requiring no manual intervention at the receiving workstation. EX1003, ¶114.

"While the First Display Displays the First Captured Image and the Second Captured Image and the Second Display Displays the Third Image": The trigger condition is met because, at the moment the third image supply ends, the system is in Watson's normal operating state: VDU 1 is displaying the video conference (first and second captured images) and VDU 2 is displaying the shared document tile (the third image). EX1004, p. 6; EX1003, ¶115. This is the steady-state configuration of Watson's dedicated display architecture, in which each display serves its assigned purpose. EX1003, ¶115.

"Automatically Control the First Display to Display the First Captured Image and the Second Captured Image": In the combined system, VDU 1 continues displaying the video conference without interruption. EX1003, ¶116. VDU 1 is permanently dedicated to video conferencing and is unaffected by the presence or absence of shared documents on VDU 2. EX1004, p. 6-7; EX1003, ¶116. The CWE slave 56 continues managing video conferencing on VDU 1 regardless of what happens on VDU 2. EX1003, ¶116. The "automatic" control of VDU 1 is inherent in Watson's architecture—the video conference continues without any manual action. EX1003, ¶116. Nimri confirms this principle: in Nimri's system, monitor 11 continues displaying the far-scene video, unaffected by the termination of the still frame presentation on monitor 13. EX1005, 2:7-12, 2:57-3:5; EX1003, ¶116.

"Control the Second Display to Display None of the First Captured Image, the Second Captured Image, and the Third Image": In the combined system, when the modified CWE master detects (per Nimri's automatic detection technique) that shared content is no longer being supplied or the supplied content has changed, VDU 2 is automatically cleared or updated to reflect the new content. EX1003, ¶117. It displays no document tiles (because the third image supply has ended and no new tile data is being received) or a new tile (because the third image supply has ended and a new image has been supplied) and no video conferencing images (because VDU 2 does not display video under Watson's dedicated architecture—there is no pathway for routing the CWE slave's video output to VDU 2). EX1004, pp. 7-8; EX1003, ¶117. The result is that VDU 2 displays "none of the first captured image, the second captured image, and the third image." EX1003, ¶117.

Nimri's disclosure directly supports this outcome. EX1003, ¶118. When Nimri's processor 23 detects a blank frame and "No slide is sent" (Step 348), monitor 13 has no content to display—neither video (which it never shows) nor a still frame (which is no longer being provided). EX1005, 7:5-8; EX1003, ¶118. The same applies when Nimri's monitor detects a new slide (steps 352, 362); in this case, the image that had been displayed on VDU 2 is removed, and replaced by a new image corresponding to a new document. EX1003, ¶118. In the combined system, the same

principle applies: when VDU 2's content supply has ended and the automatic detection logic has recognized this, VDU 2 displays nothing. EX1003, ¶118. Watson's architectural separation ensures that VDU 2 cannot fall back to displaying video—it can only display shared workspace content, and when that content is absent, VDU 2 shows nothing at all. EX1003, ¶118.

Reasonable Expectation of Success: A POSITA would have had a reasonable expectation of success in combining Watson and Nimri to achieve the claimed automatic display response. EX1003, ¶119. Watson already provides a periodic workspace monitoring mechanism through which the system generates rendered image data and detects differences between successive versions using "a bitwise logical XOR operation." EX1004, Claims 10-13. This existing mechanism provides the infrastructure for detecting changes in the workspace—including the change from "shared content present" to "shared content absent." EX1003, ¶119. Incorporating Nimri's blank-detection approach-calculating the "energy" of the image by comparing pixel values to the average pixel value, summing the differences, and comparing to a threshold—would have been a straightforward software adaptation. EX1005, 7:2-6; EX1003, ¶119. Both systems already employ image comparison techniques to detect meaningful changes, and extending Watson's comparison to recognize the specific condition of "no content remaining" is a trivial modification. EX1003, ¶119.

Furthermore, both Watson and Nimri are implemented on general-purpose computing hardware running software. EX1003, ¶120. Watson's CWE master 54 and slaves 56 are computers executing collaborative workspace software. EX1004, p. 7. Nimri's computer 16a is "a PC-type general purpose computer" with processor 23 executing programmed logic. EX1005, 3:17-25. The software-based nature of both systems means that incorporating Nimri's automatic detection logic into Watson's CWE master would require only a software modification—adding threshold comparison logic to the existing image monitoring process—without any hardware redesign. EX1003, ¶¶120-121.

8. Claims 2/6

Watson in view of Nimri discloses this element. Watson describes that "a tile 72 represents a view of a document, such as can be opened by the Microsoft Word application. A portion of another tile 74 is also illustrated. An arrow pointer 76 is also illustrated, which reflects use of a pointing device 66. The reader will appreciate that, in an embodiment where several users are participating in use of a single workspace, an arrow pointer will be displayed per user using a pointer device." EX1004, p. 8; EX1003, ¶¶122-123.

Nimri explicitly teaches that the still frame images shared and displayed on the second monitor may comprise "a computer screen display." EX1005, 1:34-40, 1:43-49, 3:46-50. Nimri states: "it may be desirable to present a computer screen

display by transmitting the image data from which the display is generated to a larger on-site monitor for audience viewing or to an off-site monitor." EX1005, 1:34-38. A "computer screen display" is a "desktop screen" or a "user interface of an application program," as it is the visual output displayed by a computer, which would be understood by a POSITA to include the desktop and/or the user interface of one or more running application programs. EX1003, ¶124. A POSITA would have understood that transmitting "the image data from which the display is generated" captures the entire computer screen, including whatever desktop environment or application program interface is currently displayed. EX1003, ¶124.

Nimri confirms that the still frame images encompass application program interfaces. EX1003, ¶125. Nimri describes enhancements "for presenting computer screens" and states that "[c]ursor movement can be ignored for purposes of determining whether to send a new slide" and that "[c]hanges that occur within a small area matching the area of the cursor icon can be ignored." EX1005, 7:56-63. This passage reflects that Nimri's system includes sharing computer screen displays that include cursors, application windows, and other graphical user interface elements—the hallmarks of a "user interface of an application program." EX1003, ¶125. Similarly, Nimri states that "[i]n computer screen presentations, a significant change may be one that is not merely a movement of the cursor or of some other non-substantive object." EX1005, 7:37-39. The reference to "non-substantive

objects" like cursors and timer icons demonstrates that Nimri contemplates sharing images of full application program user interfaces, in which cursors and hourglass icons are standard UI elements. EX1003, ¶125.

Nimri's Claim 4 recites that "said frames represent displays on a computer screen and wherein said significance criterium is based on a change to a predetermined object in said displays." EX1005, Claim 4. This confirms that the "still frame images" transmitted and displayed on monitor 13 include computer screen displays—which may constitute either a "desktop screen" or "a user interface of an application program." EX1003, ¶¶126-127.

9. Claims 3/7

Watson discloses this element. Watson describes that the documents shared in its collaborative workspace are created using word-processing software. EX1003, ¶¶128-129. Watson states that "a tile 72 represents a view of a document, such as can be opened by the Microsoft Word™ application." EX1004, p. 8. Microsoft Word is word-processing software. EX1003, ¶129. The tile 72 displayed on VDU 2 is thus "an image created by using one of word-processing software"—specifically, it is a bitmap rendering of a Microsoft Word document that has been converted through Watson's dummy printer process. EX1004, pp. 9-10, FIG4, Steps S2-S14; EX1003, ¶129.

Watson further confirms that its system is compatible with the full range of Microsoft Office applications. EX1003, ¶130. Watson states that "[p]opular document types include those used in conjunction with the Microsoft Office™ suite of products, but the invention is evidently not limited to such." EX1004, p. 11. The Microsoft Office suite includes word-processing software (Microsoft Word), spreadsheet software (Microsoft Excel), and presentation software (Microsoft PowerPoint). EX1003, ¶130. A POSITA would have understood Watson's disclosure to encompass documents created in any of these applications, because Watson's dummy printer process operates on any application that supports printing. EX1003, ¶130. Watson states: "This printer driver can be called up by any application which supports printing." EX1004, p. 8. Since spreadsheet and presentation software applications universally support printing, Watson's system would produce bitmap tiles from documents created using spreadsheet software or presentation software with identical facility. EX1003, ¶¶130-131.

10. Claims 4/8/10

Watson in view of Nimri renders obvious Claims 4/8/10 for the reasons discussed with respect to Claim 1 and as further explained below. EX1003, ¶¶132-133.

Identifying the Two Display Schemes in the Combined System: Claim 4 requires the ability to change between two display schemes. In the combined

Watson/Nimri system, these two states correspond to: (1) a state in which the video conference is active on VDU 1 but image 3 is not being shared on VDU 2 (VDU 1 shows video; VDU 2 does not show image 3); and (2) a state in which both the video conference is active on VDU 1 and a shared document tile is displayed on VDU 2 (VDU 1 shows video; VDU 2 shows the document tile). EX1003, ¶134.

Watson's Disclosure of User-Initiated Transitions Between Schemes: Watson discloses mechanisms by which a user initiates document sharing—transitioning from the first display scheme to the second. EX1003, ¶135. Watson explains that Figure 4's process "commences on receipt of a request for a document to be added to the CWE." EX1004, p. 8, FIG4. This request is generated by user input: "in a Microsoft Windows environment, a right click of a pointing device (such as a mouse) when the pointing device icon is over a document icon, causes display of a menu which, in most cases, includes a print option." EX1004, p. 8. The user's action of requesting a document to be added to the CWE constitutes an instruction that transitions the system from the first display scheme (no shared documents on VDU 2) to the second display scheme (shared document tile displayed on VDU 2). EX1003, ¶135.

Watson further discloses user-initiated transitions in the opposite direction: Watson's Figure 6 begins when a user closes a shared application (step S31). EX1004, p. 13, FIG6. However, as explained in the element [1.c] analysis,

Watson does not disclose the automatic display control that removes the third image from VDU 2 when document sharing of the third image ends. However, this is disclosed in Nimri. EX1003, ¶136.

Nimri's Contribution to the Transition from Second to First Scheme: Nimri supplies the automatic detection on and display control that completes the transition from the second display scheme back to the first. EX1005, 1:34-40; 3:46-50. In the combined system, when the remote workstation stops sharing documents (or the user closes the shared application), the local workstation's CWE master incorporating Nimri's automatic detection logic, detects the absence of incoming shared content. EX1003, ¶137. Nimri teaches that processor 23 detects blank frames by using a contrast detection method. EX1003, ¶137. Nimri teaches a second mechanism, for detecting changes in documents, that a POSITA would understand would also detect a blank frame (assuming that the "SameSlide Threshold" is appropriately set.) EX1005, 5:33-49; EX1003, ¶137. Using either of Nimri's methods, when a blank frame is detected, in the combined system, this automatic detection triggers the removal of the third image of VDU 2—completing the transition from the second display scheme (shared content on VDU 2) to the first display scheme (nothing on VDU 2). EX1003, ¶137.

The "Operation Receiving Circuit" in the Combined System: Watson's CWE master 54 and CWE slave computers 56, together with the associated input

devices, are an "operation receiving circuit configured to receive an instruction to change between a first display scheme and a second display scheme." EX1003, ¶138. Watson teaches that the user opens shared documents "by performing a selection operation, either on a button 78 as illustrated or by 'double tapping' ... in the field of the tile 72." EX1004, p. 11. Watson's Claim 7 further confirms that the system receives "a user input action comprising a keystroke on a keyboard, or an input action on a pointing device such as a mouse or touchpad." EX1004, Claim 7.

The CWE master 54 receives these user inputs and determines whether to add or remove documents from the shared workspace. When a user requests adding a document (EX1004, FIG4), the CWE master processes this request and transitions the system to the second display scheme. When a user closes a shared application (EX1004, FIG6, Step S31), the CWE master, as modified to incorporate Nimri's automatic detection logic, responds to this event and transitions the system back to the first display scheme by updating VDU 2. EX1004, pp. 9, 13, FIGS 4, 6. The computing devices that receive and process these user inputs are the claimed "operation receiving circuit." EX1003, ¶139.

The combined Watson/Nimri system satisfies the "first display scheme" requirement: Under the first display scheme (no sharing of a third "document" image), VDU 1 displays the video conference (the local and remote users' camera images, which are the "first image" and "second image")—because VDU 1 is

dedicated to video conferencing. EX1004, p. 6-7. VDU 2 displays "none of the first captured image, the second captured image, and the third image": the third image (the document) is not present on VDU 2 (because the third document is no longer being shared), and no video conferencing images appear on VDU 2 (because Watson's dedicated architecture does not permit VDU 2 to display videoconference images). EX1004, p. 7-8; EX1003, ¶140.

Nimri's disclosure is consistent with this result. EX1003, ¶141. In Nimri's system, when no still frame image is being sent (because processor 23 detected a blank frame and cleared SaveVideoFrame at Step 348), monitor 13 displays—neither video (which it never shows under Nimri's dedicated architecture) nor a still frame (which is no longer being provided). EX1005, 7:2-6; 3:1-6. The combined system achieves the identical result: VDU 2 shows no content of any kind while VDU 1 continues showing the video conference. EX1003, ¶141.

The combined Watson/Nimri system satisfies the "second display scheme" requirement: Under the second display scheme (where a document image is shared), VDU 1 continues to display the video conference (first and second captured images), because VDU 1 is dedicated to video conferencing. EX1004, p. 6-7; EX1003, ¶142. VDU 2, meanwhile, displays the shared document tile (the third image)—the bitmap rendering of the shared document transmitted from the remote workstation via Watson's Figure 4 process. EX1004, pp. 8-10, FIG4; EX1003, ¶142.

Watson's dedicated display architecture ensures that in both display schemes, VDU 1 always shows video conferencing content and VDU 2 shows either shared documents (second scheme) or nothing (first scheme). EX1003, ¶143.

The motivation to combine Watson and Nimri for Claim 4 is the same as that set forth in Sections VII.A.3 and VII.A.7. Additionally, switching between display schemes via an instruction is supported by the combination. Watson teaches that the user initiates sharing via a pointing device right-click or selection operation. EX1004, p. 9. Watson also teaches that the user opens shared documents "by performing a selection operation, either on a button 78 as illustrated or by 'double tapping' ... in the field of the tile 72." EX1004, p. 11. These user actions—received and processed by Watson's computing devices—constitute "instructions" to change between display schemes. EX1003, ¶144. Nimri discloses its own input devices (keyboard 16c, control pad 16b) and its automatic detection mechanism, which collectively ensure that the transition between schemes operates seamlessly in both directions. EX1005, 3:25-30; EX1003, ¶144.

A POSITA would have found it obvious to implement a unified control mechanism in the combined system—such as a single button on Watson's control panel window 80 or a keyboard shortcut—to switch between displaying shared content on VDU 2 (second scheme) and showing nothing on VDU 2 (first scheme). EX1004, FIG3, element 80; EX1003, ¶145. A POSITA would have been motivated

to do so to increase user convenience because providing a single control to show or hide shared content simplifies the user experience while collaborating with documents. EX1003, ¶145. Nimri itself identifies the burden of requiring the presenter to manually manage multiple steps during a presentation and automates that process. EX1005, 1:55-2:6. A POSITA would have had a reasonable expectation of success because implementing a toggle between two predefined display states is a trivial software modification to Watson's CWE master 54, which already processes user inputs. EX1003, ¶¶145-146.

B. Ground 2: Weiser Anticipates and/or Renders Obvious Claims 1-10

Weiser discloses and/or renders obvious every limitation of Claims 1-10. Weiser discloses a computing device with a camera, multiple displays, and a Video Conference/Ethernet module that intercepts, mixes, and manages multiple video streams transmitted over a network. EX1003, ¶¶147-148. Weiser discloses that video streams include both participant camera captures (first and second captured images) and application output content such as Microsoft PowerPoint slideshows and PDF documents (the third image). EX1003, ¶148. Weiser discloses providing separate mixed streams to separate displays based on participant roles and content type (FIG3B), with the system dynamically remixing streams "as slides or other documents are shown, as different participants take on speaker roles, or responsive to other requirements." A consequence of Weiser's disclosure of role-based stream

remixing is that when the presenter role shifts to a new presenter, the second display stops showing the first presenter's shared content, while the first display continues showing images of the meeting participants. EX1003, ¶148. Weiser further discloses that external video connections can be closed and video reception stopped, at which point the system necessarily would automatically exclude that stream from the mix, as it is unavailable for mixing. EX1003, ¶148.

A POSITA would further have found it obvious that when the presentation stream (third image) is finished, the first display continues showing participant camera feeds while the second display—which had been dedicated to the presentation—no longer shows the shared content. EX1003, ¶149. This is the natural, predictable result of Weiser's dynamic remixing architecture applied to a dual-display video conferencing system. EX1003, ¶149.

Claim 2/6 is satisfied because Weiser discloses that the shared content stream comprises "an application output window"—which is a user interface of an application program—and "other displayed information" that encompasses a desktop screen. EX1003, ¶150. Claim 3/7 is satisfied because Weiser recites "a Microsoft PowerPoint slideshow" (presentation software) as a video stream source, discloses "a PDF document" (routinely created from word-processing, spreadsheet, or presentation software), and references dynamic remixing "as slides or other documents are shown." EX1003, ¶150. Claim 4/8/10 is satisfied because Weiser's

video conferencing application selects mixing formats from predetermined arrangements based on participant roles and conference state, dynamically remixes streams when presentations begin or end, and processes user instructions (through I/O devices and user interfaces) to initiate or terminate content sharing—transitioning between a non-presentation state (first scheme) and a presentation state (second scheme). EX1003, ¶¶150-151.

1. [1.pre]

Weiser discloses a **computing device 102** that hosts a Video Conference/Ethernet module 100 and participates in video conferences. EX1003, ¶152. Weiser states that the first video stream "may comprise a first video capture of the first video conference participant from the first device, such as from **a webcam, integrated camera, external USB camera, or other video capture device**." EX1006, 29:56-60. The webcam, integrated camera, or external USB camera constitutes the "image capturing apparatus." EX1003, ¶152.

Weiser further discloses that the computing device 102 may be connected to multiple display devices. EX1003, ¶153. Weiser states: "the computing device 102 may comprise or be connected to multiple I/O devices 178a-178n or **one or more display devices 175**" and that "any portion of the operating system of the computing device 102 may be configured for using multiple display devices 175." EX1006, 23:55-60; 24:30-40. Weiser also states that "the computing device 102 may include

any type and/or form of video adapter, video card, driver, and/or library to interface, communicate, connect or otherwise use the display devices 175. In one embodiment, a video adapter may comprise multiple connectors to interface to multiple display devices 175. EX1003, ¶153. In other embodiments, the computing device 102 may include multiple video adapters, with each video adapter connected to one or more of the display devices 175." EX1006, 24:33-40. This disclosure establishes that Weiser's computing device can be connected to at least a first display and a second display. EX1003, ¶153.

Moreover, Weiser discloses that mixed video streams may be provided to separate displays. EX1003, ¶154. Weiser states: "video streams 302A-302D may be mixed by a video mixer into a first mixed video stream 306A for display on a first display 304A. The video streams may also be mixed into a second mixed video stream 306B for display on a second display 304B." EX1006, 28:60-29:2, FIG3B. A POSITA would have understood that Weiser's computing device 102, connected to a camera and multiple display devices, constitutes a communication device connected to an image capturing apparatus, a first display, and a second display. EX1003, ¶¶154-155.

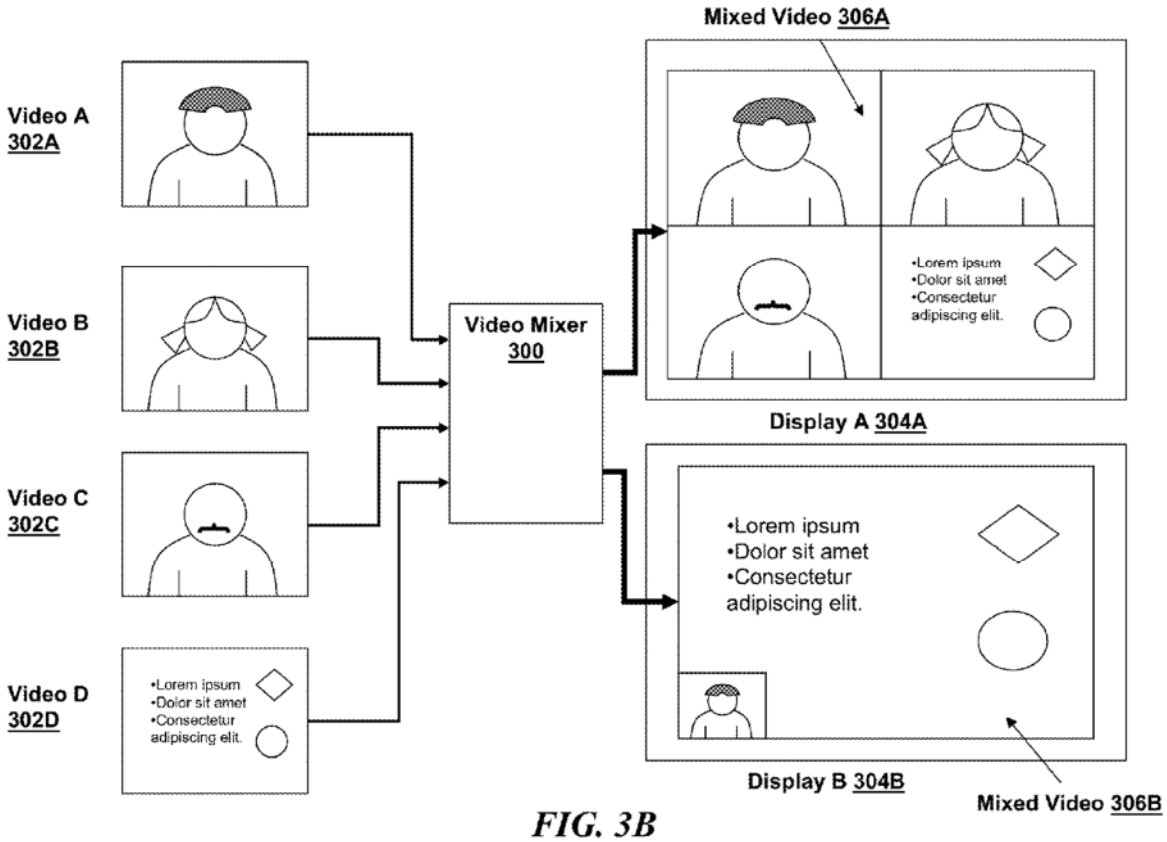

FIG. 3B

a) [5.pre]

Weiser discloses a method implemented by its computing device 102 (communication device). EX1003, ¶157. Weiser's own Claim 1 expressly recites "[a] method for providing video conferencing services via an Ethernet adapter, the method comprising" the steps of intercepting video streams, mixing them, and transmitting the mixed streams. EX1006, 61:35-65. Weiser's computing device 102, when executing the Video Conference/Ethernet module software and video conferencing application 204, performs method steps. EX1003, ¶158. The execution of video conferencing software by processors 130 and 155 to intercept, mix, and

display video streams inherently constitutes performance of a method. EX1003, ¶158. A POSITA would have understood that any processor-based system that performs functional operations through software execution necessarily performs the steps of a method. EX1003, ¶158.

Weiser's computing device 102, executing the video conferencing application 204 and utilizing the audio/video media processor 144, performs the method steps of controlling the first and second displays through role-based mixing and dynamic stream management. EX1006, 28:60-29:12, FIG3B. The video conferencing application selects mixing arrangements and provides separate mixed streams to separate displays—a first mixed video stream 306A for display on a first display 304A and a second mixed video stream 306B for display on a second display 304B. EX1006, 28:60-29:5. EX1003, ¶159.

The automatic response to the third image supply being finished is likewise performed as a method step. EX1003, ¶160. Weiser discloses that "the mixed video streams may be dynamically remixed, for example, as slides or other documents are shown, as different participants take on speaker roles, or responsive to other requirements." EX1006, 29:35-38. When the presentation stream ends, the video conferencing application dynamically remixes the remaining streams—a method step performed by software. EX1003, ¶¶160-161. The external device manager can "receive a request to close a connection or stop receiving video from a video device,"

which triggers the exclusion of that stream from subsequent mixing operations. EX1006, 58:8-12, 58:27-31.

b) [9.pre]

Weiser discloses a non-transitory, computer-readable medium storing computer-executable instructions. EX1003, ¶162. Weiser states that memory 160 of computing device 102 "may include one or more suitable type(s) of non-transitory memory, e.g. memory that is not a transitory signal in and of itself, examples of which include but are not limited to: read-only memory (ROM or EPROM), random access memory (RAM), static RAM, dynamic RAM, flash memory, one or more of a hard disk, a zip disk, a floppy disk, a diskette, a CD, a CD-ROM, a DVD, one or more database(s), one or more flat file(s), etc." EX1006, 23:15-25.

Weiser further discloses that the memory stores executable instructions. EX1003, ¶163. Weiser states: "the computing device 102 may comprise at least one memory 160 that stores instructions or data." EX1006, 23:5-7. The Video Conference/Ethernet module 100 "may comprise a library, network driver, or application that is at least partially implemented in software, firmware, or a combination of the two." EX1006, 11:20-25. This software—when executed by the processors 130 and 155, causes the computing device 102 to intercept, mix, and display video streams. EX1003, ¶164.

Weiser discloses that the stored instructions cause the computer to: select mixing arrangements based on participant roles and content type; provide separate mixed streams to separate displays (first display 304A and second display 304B); dynamically remix streams when slides or documents are shown or cease to be shown; and respond to closed connections or stopped video reception by excluding those streams from subsequent mixes. EX1006, 28:60-29:12; 57:65-58:2; EX1003, ¶¶165-166.

2. [1.a]/[5.a]/[9.a]

Weiser discloses that the media controller intercepts a first video stream comprising "a first video capture of the first video conference participant from the first device, such as from a webcam, integrated camera, external USB camera, or other video capture device." EX1006, 29:56-60; EX1003, ¶167. This first video capture from the local participant's camera constitutes the "first captured image" that is transmitted via the network. EX1003, ¶168. Weiser further discloses that the media controller intercepts a second video stream "communicated over a second transport layer connection established between the computing device and a second device of a second video conference participant." EX1006, 29:61-30:2. This second video stream comprises "a second video capture of the second video conference participant from the second device." EX1006, 2:35-38; 31:54-64. This received

captured video of the remote participant constitutes the "second captured image" received via the network. EX1003, ¶169.

Weiser's system transmits the locally captured video to remote participants and receives their captured video through network connections. The media controller operates on transport layer connections via the network interface 200, which includes "NIC 142 of Video Conference/Ethernet Module 100." EX1006, 27:15-20. The computing device 102 communicates with remote devices over a network. EX1006, 27:15-30. The network interface card 142, Ethernet switch 138, and Ethernet bridge 140 within the Video Conference/Ethernet module 100 collectively function as the claimed "transceiver." EX1006, 20:25-35, FIG1D; EX1003, ¶¶170-171.

3. [1.b]/[5.b]/[9.b]

Weiser discloses that a video stream in the conference may comprise content entirely different from images of participants captured by their cameras. EX1003, ¶172. Weiser states: "a participant such as first, second, or third participant, or a fourth participant (not illustrated) may provide a fourth video stream D 302D, which may comprise an application output window or document such as a Microsoft PowerPoint slideshow, an interactive whiteboard output, a scanner output, a PDF document, a video file, or any other type of static or dynamic video content."

EX1006, 28:55-65. This fourth video stream (stream D 302D) constitutes the "third image." EX1003, ¶173.

This third image is "displayed on a display of another communication device" before being transmitted to the local participant. EX1003, ¶174. A Microsoft PowerPoint slideshow, interactive whiteboard output, or PDF document is displayed on the screen of the remote participant's device before the image data is transmitted to the video conference system. EX1003, ¶174. Weiser confirms this by stating that in some embodiments "the second device 420B and second video conference participant may be the first device 420A and the first video conference participant, such as where the second video stream comprises an application output window, video file, slideshow, or other dynamic or static content." EX1006, 29:65-30:5. This makes clear that application output windows and slideshows are transmitted from participants' devices and are displayed on those devices before being communicated to the conference. EX1003, ¶174.

The third image is plainly "different than the first captured image and the second captured image." EX1003, ¶¶175-176. The first and second captured images are video captures from participants' cameras (webcams). EX1006, 29:56-60. Stream D 302D, by contrast, comprises an "application output window or document such as a Microsoft PowerPoint slideshow"—not a video camera capture. EX1006, 28:55-65.

4. [1.c]/[5.c]/[9.c]

Weiser discloses, and in the alternative, renders obvious, this element.

Display Control Circuit: Weiser's computing device 102 and Video Conference/Ethernet module 100 collectively include processing hardware and software that control what is displayed on the connected display devices. EX1003, ¶177. The Video Conference/Ethernet module 100 includes a processor 130, memory 132, RAM 134, and an audio/video media processor 144 (video mixer). EX1006, 20:20-35, FIG1D. The video conferencing application 204 identifies participant roles and instructs the audio/video media processor to mix video streams "in accordance with a predetermined arrangement or format." EX1006, 28:10-20. The computing device 102 includes "any type and/or form of video adapter, video card, driver, and/or library to interface, communicate, connect or otherwise use the display devices 175." EX1006, 24:33-37. These components—processor 130, media processor 144, video adapter, and video conferencing application—collectively constitute a "display control circuit configured to control the first display and the second display." EX1003, ¶178.

Role-Based Display Management: Weiser discloses that the video conferencing application selects mixing formats or arrangements from "a plurality of predetermined arrangements" **based on participant roles** and the number of participants. EX1006, 3:3-6; 30:8-20. Weiser further discloses that mixed video

streams are provided to separate displays based on these arrangements: "video streams 302A-302D may be mixed by a video mixer into a first mixed video stream 306A for display on a first display 304A. The video streams may also be mixed into a second mixed video stream 306B for display on a second display 304B." EX1006, 29:22-27, FIG3B.

Weiser discloses that the video streams of participants are displayed on first display 304A. EX1006, 29:22-35, FIG3B. Weiser explicitly discloses that the conference application presents "a full-screen or large windowed incoming stream of the remote user, while displaying the camera output of the local user in a small picture-in-picture window." EX1006, 31:27-30. This confirms that Weiser's system displays both the local user's camera output (first captured image) and the remote user's camera output (second captured image) on the same display. EX1003, ¶179.

Meanwhile, the "second mixed video stream 306B comprising the presenter and a presentation" is provided to a second display 304B. EX1006, 29:2-7, 29:26-35, FIG3B. Weiser thus discloses a role-based, purpose-driven display arrangement where the first and second images (from local and remote cameras) are displayed on one monitor, and a third image (a presentation) is provided on a second monitor. EX1003, ¶¶180-181.

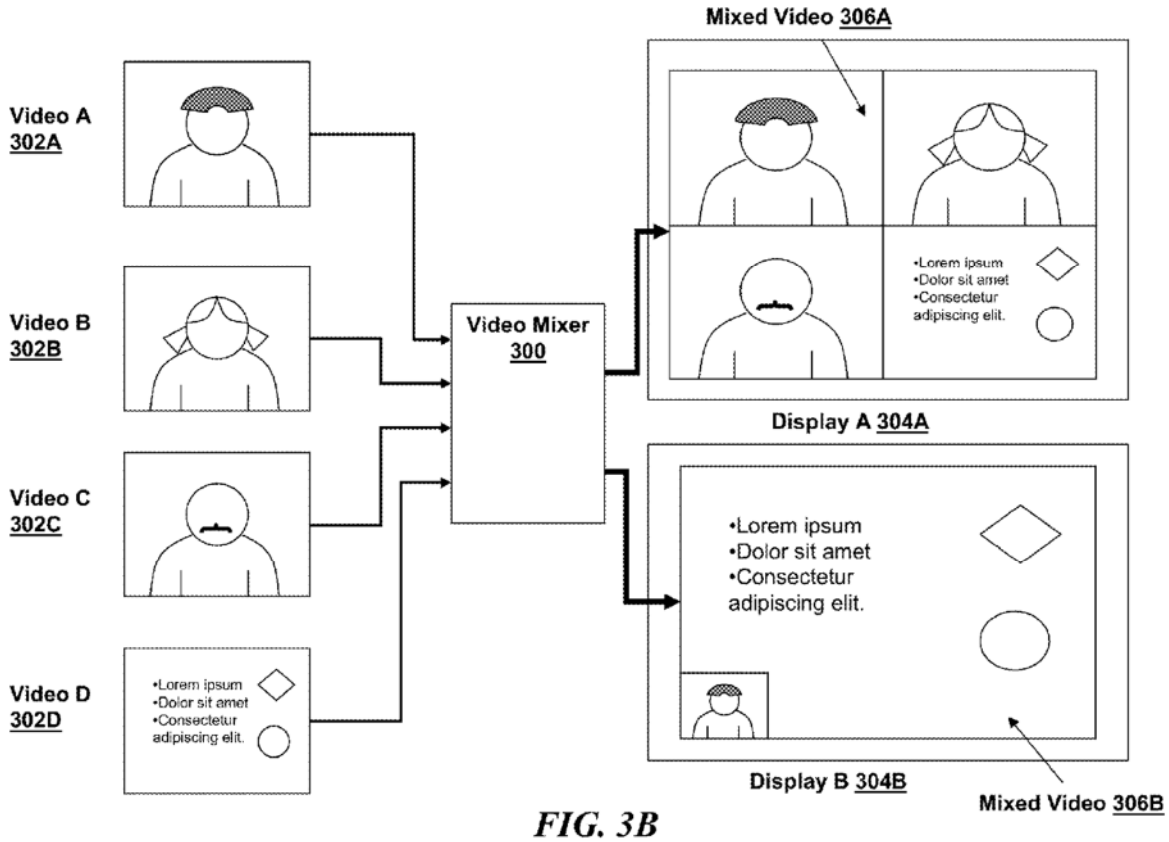

FIG. 3B

Dynamic Remixing When the Presenter Role Changes: Weiser discloses that "the mixed video streams may be dynamically remixed, for example, as slides or other documents are shown, as different participants take on speaker roles, or responsive to other requirements." EX1006, 29:35-38, FIG3B.

Weiser thus discloses that the video streams sent to each of the two monitors can be changed to incorporate different images as the roles of participants change. EX1003, ¶¶182-183. Weiser discloses that one of the participant roles is "presenter." EX1006, 4:33-44. As a result, when the roles of participants change and a first presenter (whose presentation image is currently being displayed on second display

304B) is replaced in the role of presenter by another participant, supply of the third image (corresponding to the first presenter) is "finished" and will be removed from second display 304B (the image of the first presenter, if present on that display, will also be removed for the same reason). EX1003, ¶183. These images will be replaced with images corresponding to the second presenter, because the second presenter has assumed a "presenter" role, and Weiser discloses that display arrangement dynamically changes based on changes in participant roles. EX1003, ¶183.

Due to Weiser's dynamic remixing based on participant roles changing, when a presenter is replaced with a different presenter then the second display is controlled so as to display none of the first, second or third image. EX1003, ¶184.

The first display 304A continues to display the first and second images, as, regardless of the change in presenter role, Weiser discloses that first display 304A displays images of the participants, captured by their cameras, and the first presenter and second presenter are still participants. EX1003, ¶185. The dynamic remixing occurs responsive to changes in participant roles without requiring a user to manually reconfigure the display. EX1006, 29:36-39, 30:40-55; EX1003, ¶186.

Dynamic Remixing When the Third Image Supply Is Finished: Weiser's dynamic remixing also encompasses the scenario where slides or documents are no longer being shown because the presenter is done—i.e., the supply of the third image is "finished." EX1003, ¶187. When the slideshow or document stream ends, the

video conferencing application would be understood to dynamically remix the video streams to reflect the changed conference state such that the "third image" is not shown on the second display and the third image also is not shown on the first display. EX1003, ¶187.

Weiser further discloses this concept in the context of external video producing devices. EX1003, ¶188. The external device manager is "configurable to receive a request to close a connection or stop receiving video from a video device." EX1006, 58:8-12. When a connection to an external video source is closed or video reception stops, the system ceases receiving that video stream—the supply of that content has "finished." EX1003, ¶188. At that point, the video mixing functionality would remix the remaining participant video streams without the external content. EX1006, 59:50-60:5; EX1003, ¶188. The system "mix[es] each of these video streams into a single mixed video" and "may mix in the video from the video device in accordance to any mixing format or arrangement." EX1006, 59:55-60:5. When the external video device is disconnected, the mixing would have no choice but to exclude that stream, since it no longer exists. As a result, the stream would necessarily exclude images of the presentation. EX1003, ¶188.

Based on Weiser's disclosures, when the third image (presentation/document stream) supply is finished: (1) the first display would continue to display the first and second captured images (participant camera feeds), because those streams

remain active in the video conference and are unaffected by termination of the presentation/document stream; and (2) the second display would display "none of the first captured image, the second captured image, and the third image," because the content stream that was being mixed into the stream displayed on the second display no longer exists, and can therefore no longer be mixed into the display stream for that display. EX1003, ¶189. The dynamic remixing would automatically update the display arrangement to reflect the absence of the presentation stream. EX1003, ¶189. Even if another presenter presents after the third image is finished, and assuming there are more than three participants, the claim is still met because it only requires that display 2 display none of image 1, 2, and 3. EX1003, ¶189.

The Transition Is Automatic: The video conferencing application selects mixing formats and instructs the audio/video media processor to process and mix streams without manual user intervention at the receiving end. EX1006, 30:40-55. The dynamic remixing occurs "responsive to other requirements"—which would include the cessation of a content stream, and does not require the local user to reconfigure the display. EX1006, 29:7-12. Thus, when a video stream ends (e.g., the PowerPoint slideshow concludes and the application output window is closed), the video conferencing application and media processor would automatically remix the remaining streams, resulting in the second display no longer showing the image

corresponding to the video stream. This is the natural, predictable result of Weiser's dynamic remixing architecture. EX1003, ¶190.

Alternative Obviousness Rationale: To the extent Weiser does not explicitly describe the specific state transition where the second display removes the third image when the third image supply ends, this result would have been obvious to a POSITA. EX1003, ¶191. Weiser teaches: (1) dual-display configurations for video conferencing; (2) role-based and content-based mixing arrangements; (3) dynamic remixing when slides or documents are shown or cease to be shown; and (4) the ability to close connections to external video sources. EX1006, 24:30-40; 28:60-29:12; 57:65-58:2; EX1003, ¶192. A POSITA would have been motivated to clear the content from the second display when its content source ends because displaying a frozen or stale image after the presentation is over would confuse conference participants and serve no useful purpose. EX1003, ¶193. A POSITA would have had a reasonable expectation of success because Weiser's architecture already provides the mechanisms for dynamically adjusting the mixing arrangement according to different requirements, and is a stream-mixing architecture which necessarily takes into account the presence and quantity of streams which need to be mixed. EX1003, ¶¶193-194.

5. Claims 2/6

Weiser discloses that the fourth video stream D 302D "may comprise an application output window or document such as a Microsoft PowerPoint slideshow, an interactive whiteboard output, a scanner output, a PDF document, a video file, or any other type of static or dynamic video content." EX1006, 28:45-55, FIG3A. An "application output window" is, by definition, "a user interface of an application program"—it is the visual output rendered by a running application within a windowed graphical user interface. EX1003, ¶¶195-196. An "application output window" constitutes a window displayed by an application program, which typically includes "a user interface of an application program." EX1003, ¶196.

Weiser further discloses that a video stream may comprise the output of a computing device's display, which necessarily encompasses a "desktop screen." EX1003, ¶197. Weiser states that in some embodiments, "the second video stream may comprise an image, document, application output window, file, video, or other displayed information." EX1006, 31:62-64. The phrase "other displayed information" is broad enough to encompass the entirety of a desktop screen. EX1003, ¶197. When Weiser refers to sharing an "application output window" or "other displayed information" from a participant's device, this encompasses sharing the participant's desktop screen or any application user interface visible on that screen. EX1003, ¶197.

Additionally, Weiser discloses that "video stream D 302D may be provided by a video driver or video conferencing application of the video mixing system. EX1003, ¶198. For example, video stream D 302D may comprise titles, captions, logos, animations, scrolls, status indicators, or other visual indicators that may be placed alongside or overlaid on video streams 302A-302C." EX1006, 28:55-29:2. These visual elements—titles, captions, status indicators—are standard components of application program user interfaces. EX1003, ¶¶198-199.

6. Claims 3/7

Weiser names presentation software as a source of the shared content stream. EX1003, ¶¶200-201. Weiser states that the fourth video stream D 302D "may comprise an application output window or document such as a **Microsoft PowerPoint slideshow**, an interactive whiteboard output, a scanner output, a PDF document, a video file, or any other type of static or dynamic video content." EX1006, 28:45-55; FIG3B. Microsoft PowerPoint is presentation software. EX1003, ¶201. A Microsoft PowerPoint slideshow is "an image created by using … presentation software." EX1003, ¶201.

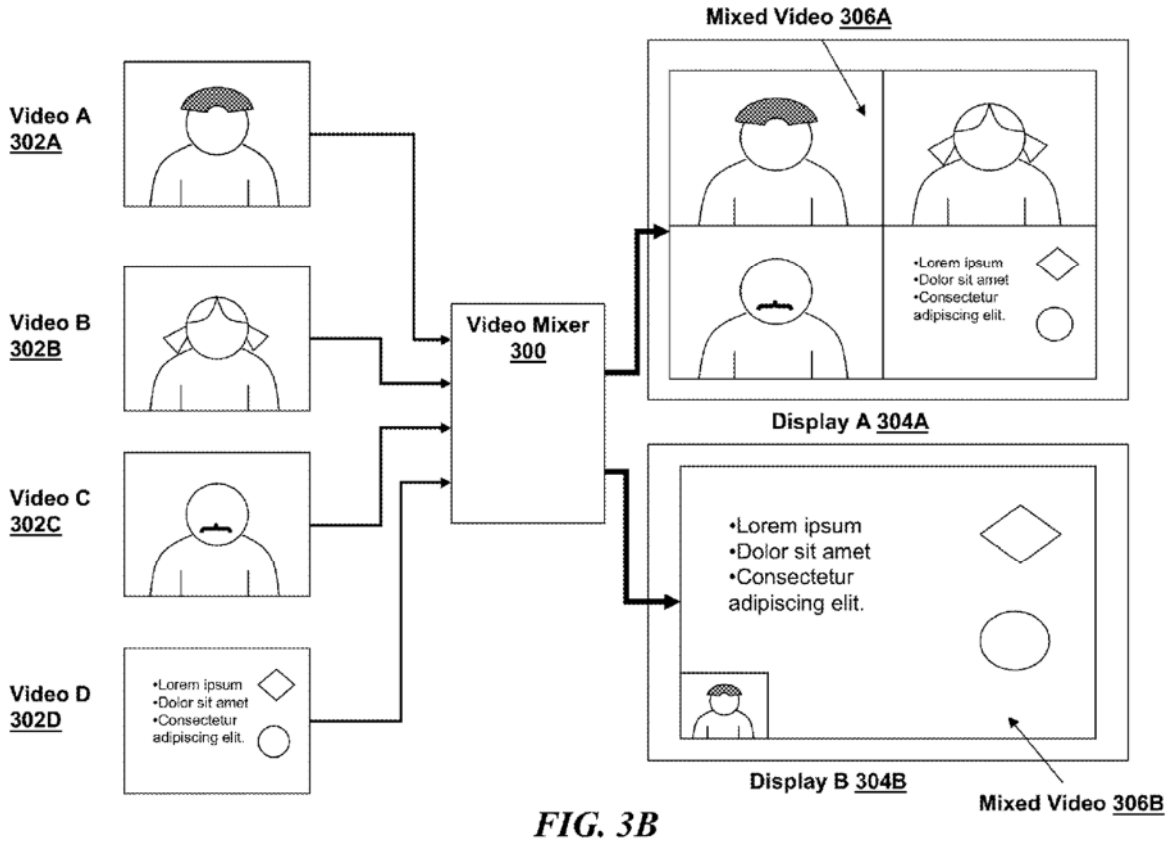

FIG. 3B

Weiser also discloses "a PDF document" as a video stream source. EX1006, 28:50. PDF documents are commonly created by exporting or printing from word-processing software (such as Microsoft Word), spreadsheet software (such as Microsoft Excel), or presentation software (such as Microsoft PowerPoint). EX1003, ¶202. A "PDF document" shared during a video conference would in many cases be an image "created by using one of word-processing software, spreadsheet software, and presentation software," because those are the primary applications from which PDF documents are generated in business environments. EX1003, ¶202.

Furthermore, Weiser discloses that the shared content stream may comprise "an application output window or document." EX1006, 28:45-50. The phrase "application output window" encompasses the output of any running application, including word-processing software displaying a document, spreadsheet software displaying a workbook, or presentation software displaying slides. EX1003, ¶203.

Weiser also discloses that the system supports dynamic remixing "as slides or other documents are shown." EX1006, 29:7-12. The term "slides" in this context refers to presentation slides—content created using presentation software. EX1003, ¶204. Thus, Weiser's system is designed to handle precisely the types of content described in Claims 3/7. EX1003, ¶205.

7. Claims 4/8/10

Weiser discloses, and in the alternative, renders obvious, these claims.

The "First Display Scheme" and "Second Display Scheme" in Weiser: Under Weiser's "first display scheme" (which corresponds to no active presentation), the first display shows participant camera feeds (the first and second captured images in a PIP or split-screen arrangement) and the second display shows no content—i.e., "none of the first captured image, the second captured image, and the third image." EX1006, 31:15-20; 24:30-40. No presentation stream is active, so nothing is assigned to the second display. EX1003, ¶¶206-207.

Under Weiser's "second display scheme" (in which there is someone in the presenter role, sharing a presentation), the first display continues to show participant camera feeds (first and second captured images) and the second display shows the shared content stream—"a second mixed video stream 306B comprising the presenter and a presentation." EX1006, 28:60-29:7; EX1003, ¶208.

Weiser's Changing Between Mixing Formats: Weiser discloses that the video conferencing application selects mixing formats from "a plurality of predetermined arrangements" based on participant roles and conference state. EX1006, 3:3-6; 30:8-20, FIG3C; EX1003, ¶209.

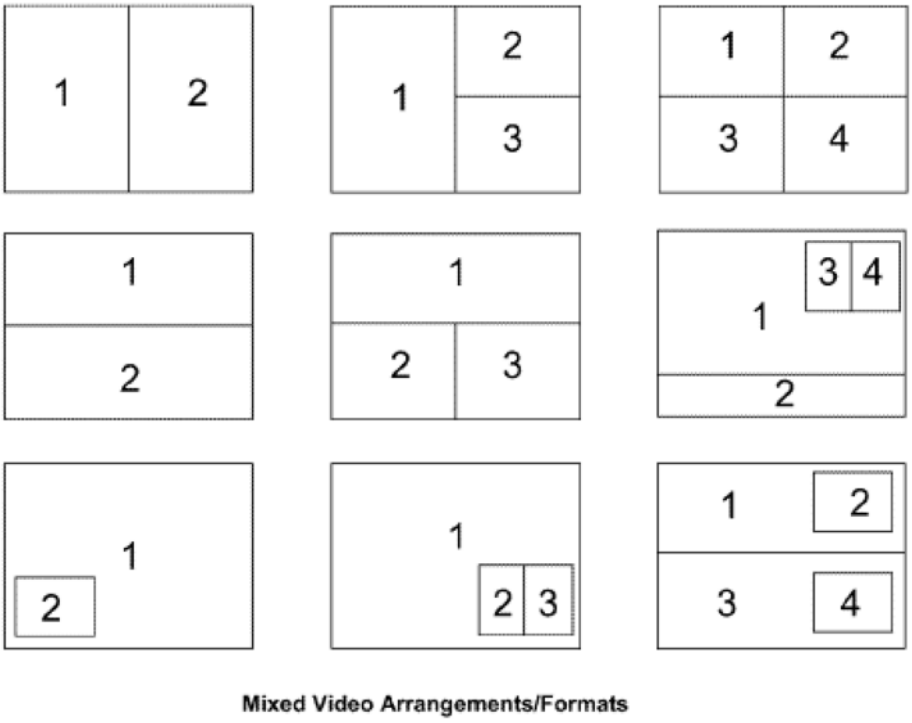

Mixed Video Arrangements/Formats

FIG. 3C

Weiser further discloses that "the mixed video streams may be dynamically remixed, for example, as slides or other documents are shown, as different participants take on speaker roles, or responsive to other requirements." EX1006, 29:35-38, FIG3B. This dynamic remixing between different display arrangements—from a non-presentation format (no slides) to a presentation format (with slides) and back—corresponds to changing between the first and second display schemes. EX1003, ¶210.

The transition to the "second display scheme" occurs when a participant assumes the presenter role and begins sharing slides or documents. EX1003, ¶211. Weiser states that stream D 302D may be "provided" by a participant during the conference. EX1006, 28:45-50. In the context of external video producing devices, Weiser discloses that "a user of the computing device or an administrator of the video conference may want to seamlessly integrate video from an external video producing device … into the video conference." EX1006, 55:40-55. The user's request to integrate the external video or share a document initiates the transition from the first display scheme to the second. EX1003, ¶211.

The transition back to the "first display scheme" occurs when the presenter stops sharing. EX1003, ¶213. Weiser discloses that the external device manager is "configurable to receive a request to close a connection or stop receiving video from a video device." EX1006, 58:8-12. When the user stops sharing, the system

transitions from the second display scheme (shared content on display) back to the first (no shared content). EX1003, ¶212.

Role-Based Selection Constitutes Changing Between Display Schemes: Weiser discloses that "the first conference participant may log in as a presenter to an authentication system, and the authentication system may notify the video conferencing application that the conference participant is a presenter." EX1006, 32:9-13. When a participant assumes the "presenter" role, the video conferencing application selects a corresponding mixing format that includes the presenter's shared content on a second display (the "second display scheme"). EX1003, ¶213. When the participant relinquishes the presenter role or the presentation ends, the system reverts to a non-presentation mixing format (the "first display scheme"). EX1006, 32:10-25.

Weiser further discloses that the system can generate different mixed streams for different roles simultaneously: "A first mixed video stream 306A may be provided to the presenter, so that he or she may view feedback from viewer participants, while a second mixed video stream 306B comprising the presenter and a presentation may be provided to the viewer participants." EX1006, 29:30-35. A POSITA would have understood that in a dual-display configuration, the transition between a state with presentation content on the second display and a state without it is triggered by a user assuming or relinquishing a presenter role or a user starting

or stopping a presentation, both of which are "instruction[s] to change between a first display scheme and a second display scheme." EX1003, ¶214.

The "Operation Receiving Circuit": Weiser's computing device 102 includes user interface components that receive user instructions. EX1003, ¶215. Weiser discloses that computing device 102 includes "optional user interface 165" and "one or more I/O devices 178a-178n." EX1006, 22:50-55; 24:30-35. The computing device processes user inputs through its operating system and video conferencing application 204. EX1006, 28:10-20. The video conferencing application 204 "may comprise functionality for identifying one or more participants of a video conference and one or more respective roles of participants" and "may identify a video stream as corresponding to an identified role of a participant, and may generate a request for audio/video media processor 206 to mix the video stream in accordance with a predetermined arrangement or format." EX1006, 28:10-25.

The processor 155 of computing device 102, together with the user interface 165 and I/O devices 178, collectively constitutes an "operation receiving circuit configured to receive an instruction to change between a first display scheme and a second display scheme." EX1003, ¶216. When a user initiates screen sharing or begins a PowerPoint slideshow, the video conferencing application receives this instruction and changes the mixing arrangement from one without shared content (first scheme) to one with shared content (second scheme). EX1003, ¶216. When the

user stops sharing or closes the slideshow, the application receives this instruction and reverts to the first scheme. EX1003, ¶¶216-217.

VIII. CONCLUSION

Petitioner respectfully requests institution of IPR and cancellation of all claims of the ’464 Patent.

IX. MANDATORY NOTICES PURSUANT TO 37 C.F.R. §42.8

A. Real Parties-In-Interest under 37 C.F.R. §42.8(b)(1).

The real party-in-interest is Zoom Communications, Inc. No other parties exercised or could have exercised control over this Petition. No other parties funded or directed the filing of this Petition.

B. Related Matters Under 37 C.F.R. §42.8(b)(2).

The ’464 Patent is asserted in *Ricoh Company, Ltd. v. Zoom Communications, Inc. f/k/a Zoom Video Communications, Inc.*, No. 25-2095 (JCG) (D. Del.).

C. Lead and Back-up Counsel under 37 C.F.R. §42.8(b)(3).

Amanda S. Bonner (Lead Counsel) Registration No. 65,224 MAYER BROWN LLP 71 South Wacker Drive Chicago, IL 60606 Telephone: (312) 701-8645 Facsimile: 312-701-7711 asbonner@mayerbrown.com	B. Clayton McCraw (Back-up counsel) Registration No. 68,258 MAYER BROWN LLP 1221 Avenue of the Americas New York, NY 10020-1001 Telephone: (212) 506-2649 CMcCraw@mayerbrown.com Cliff A. Maier (Back-up counsel) Registration No. 59,526 Mayer Brown LLP

	3000 El Camino Real Palo Alto, CA 94206-2112 Telephone: 650-331-2026 CMaier@mayerbrown.com Nicholas Ciulla (Back-up counsel) Registration No. 78,409 MAYER BROWN LLP 71 South Wacker Drive Chicago, IL 60606 Telephone: (312) 701-7779 Facsimile: 312-701-7711 nciulla@mayerbrown.com

D. Service Information under 37 C.F.R. §42.8(b)(4).

Please direct all correspondence to lead counsel at the address identified above. Petitioner consents to electronic service on counsel of record.

X. GROUNDS FOR STANDING

Petitioner certifies that the ’464 Patent is available for *inter partes* review and that Petitioner is not barred or estopped from requesting an *inter partes* review of the ’464 Patent. 37 C.F.R. §42.104(a).

XI. PAYMENT OF FEES

A fee of $51,875 charged to Deposit Account 130019 was paid with the filing this petition. 37 C.F.R. §§42.15(a), 42.103. Should any further fees be required by the present Petition, the Board is hereby authorized to charge the above-referenced Deposit Account.

XII. STATEMENT OF PRECISE RELIEF REQUESTED

Petitioner requests IPR and cancellation of claims 1-10 because they are unpatentable under 35 U.S.C. §§102 and 103 based on the foregoing grounds.

Date: July 10, 2026

Respectfully submitted,

By:/ Amanda S Bonner /
Amanda Streff Bonner
Registration No. 65,224
MAYER BROWN LLP
71 S. Wacker Drive
Chicago, IL 60606
Telephone: 312-701-8645
Facsimile: 312-701-7711
asbonner@mayerbrown.com

B. Clayton McCraw
Registration No. 68,258
MAYER BROWN LLP
1221 Avenue of the Americas
New York, NY 10020-1001
Telephone: (212) 506-2649
CMcCraw@mayerbrown.com

Counsel for Petitioner

CERTIFICATE OF SERVICE

Pursuant to 37 C.F.R. §§42.6 and 42.105, I hereby certify that on July 10, 2026, a copy of the attached PETITION FOR INTER PARTES REVIEW OF U.S. PATENT NO. 11,256,464, together with all exhibits, and all other papers filed therewith, including a Power of Attorney on behalf of Petitioners, was served via Priority Mail Express on the attorneys of record for the patent owner at the following address:

Attorney of Record for Patent Owner

HICKMAN BECKER BINGHAM LEDESMA LLP
1999 South Bascom Avenue
Suite 700
Campbell, CA 95008
UNITED STATES

Date: July 10, 2026

Respectfully submitted,

By:/ Amanda S Bonner/
Amanda Streff Bonner
Registration No. 65,224
MAYER BROWN LLP
71 S. Wacker Drive
Chicago, IL 60606
Telephone: 312-701-8645
Facsimile: 312-701-7711
asbonner@mayerbrown.com

B. Clayton McCraw
Registration No. 68,258
MAYER BROWN LLP
1221 Avenue of the Americas
New York, NY 10020-1001
Telephone: (212) 506-2649

CMcCraw@mayerbrown.com

Counsel for Petitioner

CERTIFICATION PURSUANT TO 37 C.F.R. § 42.11

Pursuant 37 C.F.R. § 42.11, the undersigned certifies that this PETITION FOR INTER PARTES REVIEW OF U.S. PATENT NO. 11,256,464, and accompanying evidence are not being presented for an improper purpose and that all legal contentions, allegations, and denials are warranted and have evidentiary support.

July 10, 2026

Respectfully submitted,

By:/ Amanda S Bonner/
Amanda Streff Bonner
Registration No. 65,224
MAYER BROWN LLP
71 S. Wacker Drive
Chicago, IL 60606
Telephone: 312-701-8645
Facsimile: 312-701-7711
asbonner@mayerbrown.com

B. Clayton McCraw
Registration No. 68,258
MAYER BROWN LLP
1221 Avenue of the Americas
New York, NY 10020-1001
Telephone: (212) 506-2649
CMcCraw@mayerbrown.com

Counsel for Petitioner

CERTIFICATION PURSUANT TO 37 C.F.R. § 42.24(d)

Pursuant to 37 C.F.R. § 42.24(d), the undersigned certifies that this PETITION FOR INTER PARTES REVIEW OF U.S. PATENT NO. 11,256,464 complies with the type-volume limitation of 37 C.F.R. § 42.24(a). The word count application of the word processing program used to prepare this paper states that the paper contains 13,942 words, excluding the parts of the paper exempted by 37 C.F.R. §§ 42.24(a)(1).

Date: July 10, 2026

Respectfully submitted,

By:/ Amanda S Bonner/
Amanda Streff Bonner
Registration No. 65,224
MAYER BROWN LLP
71 S. Wacker Drive
Chicago, IL 60606
Telephone: 312-701-8645
Facsimile: 312-701-7711
asbonner@mayerbrown.com

B. Clayton McCraw
Registration No. 68,258
MAYER BROWN LLP
1221 Avenue of the Americas
New York, NY 10020-1001
Telephone: (212) 506-2649
CMcCraw@mayerbrown.com

Counsel for Petitioner