(12) INTERNATIONAL APPLICATION PUBLISHED UNDER THE PATENT COOPERATION TREATY (PCT)

(19) World Intellectual Property Organization
International Bureau

(43) International Publication Date
13 August 2020 (13.08.2020)

WIPO | PCT

(10) International Publication Number
WO 2020/161545 A2

(51) International Patent Classification:
Not classified

(21) International Application Number:
PCT/IB2020/000231

(22) International Filing Date:
05 February 2020 (05.02.2020)

(25) Filing Language: English

(26) Publication Language: English

(30) Priority Data:

62/801,468	05 February 2019 (05.02.2019)	US
62/873,889	13 July 2019 (13.07.2019)	US
16/781,897	04 February 2020 (04.02.2020)	US

(71) Applicant: **SOLOS TECHNOLOGY LIMITED** [—/CN]; Unit 211, 2/F., Photonics Center, No. 2 Science Park East Avenue, Hong Kong Science Park, Shatin, N.T., Hong Kong (CN).

(72) Inventors: **VILLALPANDO, Ernesto, Carlos, Martinez**; 125 North Drive, Westborough, MA 01581 (US). **CHEUNG, Wai, Kuen**; 1A, Block 15, Constellation Cove, Taipo, New Territories, Hong Kong (CN). **LAW, Kwok, Wah**; Fiat C, 16/F, Tower 2, Green Code, No. 1 Ma Sik Road, Fanling, New Territories, Hong Kong (CN). **SO, Chiu, Ming**; Fiat D, 15/F, Welland Bldg, No. 388, Queen's Rd Central, Sheung Wan, Hong Kong (CN).

(81) Designated States *(unless otherwise indicated, for every kind of national protection available)*: AE, AG, AL, AM, AO, AT, AU, AZ, BA, BB, BG, BH, BN, BR, BW, BY, BZ, CA, CH, CL, CN, CO, CR, CU, CZ, DE, DJ, DK, DM, DO, DZ, EC, EE, EG, ES, FI, GB, GD, GE, GH, GM, GT, HN, HR, HU, ID, IL, IN, IR, IS, JO, JP, KE, KG, KH, KN, KP, KR, KW, KZ, LA, LC, LK, LR, LS, LU, LY, MA, MD, ME, MG, MK, MN, MW, MX, MY, MZ, NA, NG, NI, NO, NZ, OM, PA, PE, PG, PH, PL, PT, QA, RO, RS, RU, RW, SA, SC, SD, SE, SG, SK, SL, ST, SV, SY, TH, TJ, TM, TN, TR, TT, TZ, UA, UG, US, UZ, VC, VN, WS, ZA, ZM, ZW.

(84) Designated States *(unless otherwise indicated, for every kind of regional protection available)*: ARIPO (BW, GH, GM, KE, LR, LS, MW, MZ, NA, RW, SD, SL, ST, SZ, TZ, UG, ZM, ZW), Eurasian (AM, AZ, BY, KG, KZ, RU, TJ, TM), European (AL, AT, BE, BG, CH, CY, CZ, DE, DK, EE, ES, FI, FR, GB, GR, HR, HU, IE, IS, IT, LT, LU, LV,

(54) Title: PERSONALIZED DIRECTIONAL AUDIO FOR HEAD/WORN AUDIO PROJECTION SYSTEMS, APPARATUSES, AND METHODS

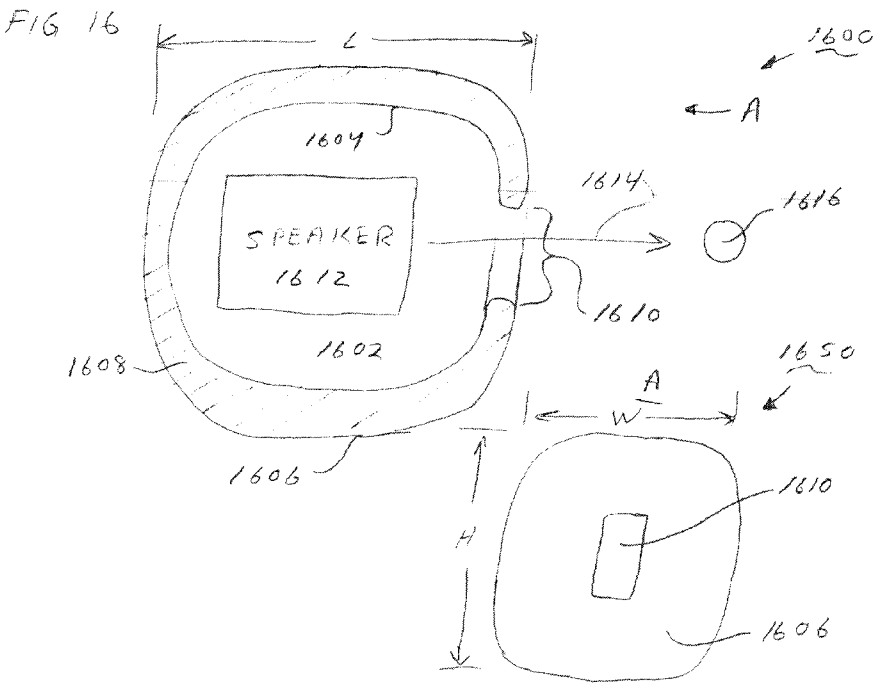

(57) Abstract: Systems, apparatuses, and methods are taught that provide audio signals to a user from an eyewear device utilizing a personal projection micro speaker system, A method includes generating audio signals within a chamber. The chamber' is a part of a volume of the eyewear device. The audio signals are concentrated for delivery to the user's ear. The audio signals are transmitted to the user's ear 'through a port in the chamber.

Luxottica et al. v. Solos
IPR2026-00413
Petitioners' Ex. 1017

[Continued on next page]

WO 2020/161545 A2

MC, MK, MT, NL, NO, PL, PT, RO, RS, SE, SI, SK, SM, TR), OAPI (BF, BJ, CF, CG, CI, CM, GA, GN, GQ, GW, KM, ML, MR, NE, SN, TD, TG).

Declarations under Rule 4.17:

— *as to applicant's entitlement to apply for and be granted a patent (Rule 4.17(ii))*

— *as to the applicant's entitlement to claim the priority of the earlier application (Rule 4.17(iii))*

Published:

— *without international search report and to be republished upon receipt of that report (Rule 48.2(g))*

INTERNATIONAL APPLICATION TITLE

PERSONALIZED DIRECTIONAL AUDIO FOR HEAD-WORN AUDIO PROJECTION SYSTEMS, APPARATUSES, AND METHODS

RELATED APPLICATIONS

[0001] This patent application is a continuation-in-part of United States Non-provisional Patent Application titled "Modularized Eyewear Systems, Apparatus, and Methods," filed on December 11, 2019, Serial Number 16/711,340, which claims priority from United States Provisional Patent Application titled "Modularized Eyewear System with Interchangeable Frame and Temples with Embedded Electronics for Mobile Audio-Visual Augmented and Assisted Reality," filed on December 12, 2018, Serial Number 62/778,709 and from United States Provisional Patent Application Serial Number 62/873,889 titled "Wearable Devices Apparatuses, Systems, And Methods," filed on July 13, 2019. United States Non-provisional Patent Application Serial Number 16/711,340 titled "Modularized Eyewear Systems, Apparatus, and Methods," is hereby fully incorporated by reference. This application claims priority from co-pending U.S. Provisional Patent Application Serial Number 62/801,468 titled "Personalized Directional Audio For Head-Worn Audio Projection Devices With Near-Eye (Electro-Dynamic) Microspeaker System," filed on February 05, 2019. United States Provisional Patent Application Serial Number 62/801,468 titled "Personalized Directional Audio For Head-Worn Audio Projection Devices With Near-Eye (Electro-Dynamic) Microspeaker System," is hereby fully incorporated by reference. This application claims priority from co-pending United States

Provisional Patent Application Serial Number 62/873,889 titled "Wearable Devices Apparatuses, Systems, And Methods," filed on July 13, 2019. United States Provisional Patent Application Serial Number 62/873,889 entitled "Wearable Devices Apparatuses, Systems, And Methods," is hereby fully incorporated by reference.

BACKGROUND OF THE INVENTION

1. TECHNICAL FIELD

[0002] The invention relates generally to eyewear devices, and more particularly to apparatuses, methods, and systems for providing audio signals to a user through an eyewear device.

2. BACKGROUND

[0003] The pace of modern life moves at a fast past. A person is often placed under the constraint of time and is placed in situations where his or her hands are occupied, and information is not accessible to the person. This can present a problem. Currently available eyewear such as prescription glasses, e.g., prescription reading glasses or prescription sunglasses are expensive and are not readily reconfigured to different user's needs. This can present a problem. Personalized sound transmission is often done with an occlusive in ear device known as an earphone or earbud. Such a device obstructs the ear canal and can interfere with a user's hearing of far field and near field sounds. This can present a problem. Sharp directivity for personal listening of audio serves as a basis for mobile augmented reality and assisted reality head-worn eyewear device applications. Current methods of sound transmission to a user such

as bone conduction technologies have low transmission efficiencies with lower sound energy levels delivered to the user. This can present a problem. Thus, problems exist that require technical solutions that uses technical means to produce technical effects.

BRIEF DESCRIPTION OF THE DRAWINGS

[0004] The invention may best be understood by referring to the following description and accompanying drawings that are used to illustrate embodiments of the invention. The invention is illustrated by way of example in the embodiments and is not limited in the figures of the accompanying drawings, in which like references indicate similar elements.

[0005] **Figure 1** illustrates a modular reconfigurable eyewear system, according to embodiments of the invention.

[0006] **Figure 2** illustrates a reconfigurable component for an eyewear device, according to embodiments of the invention.

[0007] **Figure 3** illustrates multiple reconfigurable components for an eyewear device, according to embodiments of the invention.

[0008] **Figure 4** illustrates another reconfigurable modularized eyewear system, according to embodiments of the invention.

[0009] **Figure 5** illustrates a perspective view and a top view of the modularized eyewear system from **Figure 4**, according to embodiments of the invention.

[0010] **Figure 6A** illustrates a system architecture for a modularized eyewear device, according to embodiments of the invention.

[0011] **Figure 6B** illustrates wireless networks corresponding to the system architecture for the modularized eyewear device of **Figure 6A**, according to embodiments of the invention.

[0012] **Figure 7** illustrates another system architecture for the modularized eyewear device of **Figure 4**, according to embodiments of the invention.

[0013] **Figure 8** illustrates a block diagram of a temple insert module, according to embodiments of the invention.

[0014] **Figure 9** illustrates a modularized eyewear device fitted with a behind the neck module assembly, according to embodiments of the invention.

[0015] **Figure 10** illustrates a behind the neck module assembly in perspective view configured with a wearable device, according to embodiments of the invention.

[0016] **Figure 11** illustrates coupling a temple interlock to a temple according to embodiments of the invention.

[0017] **Figure 12** illustrates coupling a behind the neck module to electronics contained within a temple, according to embodiments of the invention.

[0018] **Figure 13** illustrates a schematic for combining a behind the neck module assembly with temple electronics, according to embodiments of the invention.

[0019] **Figure 14** illustrates a user interface on a behind the neck module assembly, according to embodiments of the invention.

[0020] **Figure 15** illustrates a block diagram for an electronics unit configured for a behind the neck electronics pod (ePOD), according to embodiments of the invention.

[0021] **Figure 16** illustrates a personal projection micro speaker system in a cross-sectional view, according to embodiments of the invention.

[0022] **Figure 17** illustrates another personal projection micro speaker system in a cross-sectional view, according to embodiments of the invention.

[0023] **Figure 18** illustrates a personal projection micro speaker system, in a cross-sectional view, utilizing multiple speakers, according to embodiments of the invention.

[0024] **Figure 19** illustrates a personal projection micro speaker system on a user, according to embodiments of the invention.

[0025] **Figure 20** illustrates an internal surface of an acoustic chamber, according to embodiments of the invention.

[0026] **Figure 21** illustrates an acoustic chamber curved surface of general shape in a cross-sectional view, according to embodiments of the invention.

[0027] **Figure 22** illustrates variable density structures, according to embodiments of the invention.

[0028] **Figure 23** illustrates, in cross-section, a multilayered acoustic chamber wall, according to embodiments of the invention.

[0029] **Figure 24** illustrates a distribution of variable density structures in a temple of an eyewear device, according to embodiments of the invention.

[0030] **Figure 25** illustrates an exploded perspective view of a personal projection speaker system in a temple of an eyewear device, according to embodiments of the invention.

[0031] **Figure 26** illustrates an external sound reflector cover, according to embodiments of the invention.

[0032] **Figure 27-28** illustrate additional external sound reflector covers and acoustic gain, according to embodiments of the invention.

[0033] DETAILED DESCRIPTION

[0034] In the following detailed description of embodiments of the invention, reference is made to the accompanying drawings, in which like references indicate similar elements, and in which is shown by way of illustration, specific embodiments in which the invention may be practiced. These embodiments are described in sufficient detail to enable those of skill in the art to practice the invention. In other instances, well-known circuits, structures, and techniques have not been shown in detail in order not to obscure the understanding of this description. The following detailed description is, therefore, not to be taken in a limiting sense, and the scope of the invention is defined only by the appended claims.

[0035] In one or more embodiments, methods, apparatuses, and systems are described, that provide modularization of an eyewear system for a user. As described in the description of embodiments below, various combinations and configurations of electronics are taught for incorporation into eyewear devices. Some electronics configurations are removably couplable to an eyewear device. In some embodiments, an electronics configuration is built-into an eyewear device. In yet other embodiments, a behind the neck module assembly is releasably couplable with an eyewear device. In various embodiments, the modularized reconfigurable eyewear devices provide information to a user through the eyewear device. As used in this description of embodiments, information includes streaming audio in the form of music, information also includes parameters of a user's biology (e.g., biometrics of physiology, biomechanics, etc.) such as, but not limited to; heart rate, breathing rate, posture, steps, cadence, etc. Information also includes notifications and information of interest to a user from digital applications embedded in a mobile computing platform (i.e., smart phones, Internet of Things (iOT) devices, etc.) or from environmental or spatial context based on external sensory information such as, but not limited

to; geographical positioning data, or information on a vehicle that a user is using such as; revolutions per minute (RPM) of a bicycle, engine parameters such as RPM, oil pressure, cooling water temperature, wind speed, depth of water, air speed, etc. In various embodiments, information is presented to a user through an eyewear device by, for example, an audio broadcast that a user hears and a video broadcast to a display that the user sees in the eyewear device, or sees as an image as projected onto a pupil of the user's eye. Thus, information is to be given an expansive meaning within the scope of embodiments taught herein.

[0036] **Figure 1** illustrates a modular reconfigurable eyewear system, according to embodiments of the invention. With reference to **Figure 1**, a modularized eyewear device is shown in perspective view at 100. The modularized eyewear device 100 has a frame chassis 102. In various embodiments, the frame chassis 102 is ophthalmically constructed to provide frame rim portions that hold lens 120 and lens 122. The lens 120 and 122 can provide any of the functions that eyewear devices provide, such as but not limited to, a safety glass lens, a prescriptive lens, a sunglass lens, a welding glass lens, etc. An eyewear device can also contain a single lens instead of the dual lens illustrated. In some embodiments, a nose pad is provided, thereby providing a cushion for the contact zone with a user's nose. In some embodiments, the nose pad is made from a compliant material such as silicon rubber.

[0037] A temple 104 (left temple) and a temple 114 (right temple) are coupled to the frame chassis 102. The temples 104 and 114 can be flexibly coupled to the frame chassis 102, with hinges as shown in the figure or the temples 104 and 114 can be provided with a fixed orientation relative to the frame chassis 102.

[0038] In various embodiments, one or more temples (104 and 114) and the chassis frame 102 can be fitted with electronics as described below. Within the view of 100, a left

temple insert module (TIM) 106 is configured with the left temple 104 and a right temple insert module (TIM) 116 is configured with the right temple 114. Temple insert modules (TIMs) are described more fully in conjunction with the figures below.

[0039] With continued reference to **Figure 1**, a modularized eyewear device is shown in exploded view at 130. A frame chassis 132 is ophthalmically constructed to encircle a lens 140 and a lens 142 with a frame rim thereby securing the lens 140 and the lens 142 thereto. A brow bar 146 is fastened to the frame chassis 132 in various ways, via assembly fasteners, adhesive, etc. A left temple 144 includes a left temple connector 152 which is rotatably coupleable with a left chassis connector 150. Together, the left chassis connector 150 and the left temple connector 152 form a rotatable mechanical and electrical connection between the chassis 132 and the left temple 144, thereby providing one or more electrical pathways to connect the frame chassis 132 to the left temple 144. Similarly, a right temple 134 is rotatably coupleable to the frame chassis 132 through a right hinge assembly 148.

[0040] Note that in some embodiments, a modularized eyewear device is configured such that each temple can be removed from its hinge via an electrical/mechanical connector having one or more electrical contacts, not shown for clarity in the illustration. These electrical contact points can be made using, for example, pins, points, pads, slots, contact devices, etc. For example, the line indicated at 154 demarcates the mating of the right temple connector with the right temple 134. Similarly, the line indicated at 156 demarcates the mating of the left temple connector 152 with the left temple 144.

[0041] Through the provision of electrical/mechanical connectors between each temple, e.g., 134, 144 and the frame chassis 132 the temples are interchangeable with the eyewear device. This functionality permits a user to interchange one temple with another. Different

temples can be configured with different electronics to provide different functionality as described herein. Either temple can be configured to accommodate various electronics configurations. For example, in one or more embodiments, the right interchangeable temple accommodates an electronics package that can include one or more of; a biometric sensor, a biomechanical sensor, an environmental sensor, a temperature sensor, an acoustic sensor, a motion sensor, a light sensor, a touch sensor, a proximity sensor, a velocity sensor, an acceleration sensor, a rotation sensor, a magnetic field sensor, a global position system (GPS) receiver, cables, microphones, a micro speaker, a source of electrical power (battery), a camera, a micro display, a heads-up display (HUD) module, a multiaxis inertial measurement unit, a wireless communications system. Note that a TIM can also contain the electronics package and sensor(s) described above. In various embodiments, one or more wireless communication system are provided that utilize for example; near-field communications (NFC) using the industrial-scientific-medical (ISM) frequency of 13.56 MHz, the Adaptive Network Topology (ANT) ANT+ wireless standard, wireless communications using a Bluetooth standard, a Bluetooth low energy standard (BLE), wireless communication using a Wi-Fi standard, and wireless communication using mobile telephone standards such as for example the 3G, 4G, Long Term Evolution (LTE), 5G, etc. standard or other wireless standards. In some embodiments, electrical pathways from the electronics exit a temple via a sheath cavity and travel into a temple sheath and continue into a brow bar sheath cavity. The right interchangeable temple contains a hinge-connector 148 that fastens to the brow bar 146 and chassis frame 132.

[0042] In one or more embodiments, the right interchangeable temple attaches to the front of the frame chassis via a hinge-connector that allows for power and data transferred to the left interchangeable temple through the modular brow bar. The hinge-connector mechanically

interlocks with the frame chassis and allows for power/data connectivity with electrical pin conductors. In one or more embodiments, when positioned in the open direction of wearing, the hinge-connectors sense the open state of the device allowing for power or data transfer. When in the closed position (temples folded inward), the hinge-connector in conjunction with signals received from one or more of proximity sensors and motion sensors will allow the system to sense the user-device interaction state and will deactivate the power or data transfer. Furthermore, in the open position, in some embodiments a sensor, such as, but not limited to, a proximity sensor, can detect when the device is being worn by a user and can thus operate in its active (ON) state. This function leads to reduced power consumption when folded and stowed and can lead to automatic power up while a user wears the device on his or her head. In addition to switchable data or power transfer from the hinge-connector, the hinge-connector can provide flexible circuits and wired micro-connectors that provide steady uninterrupted power and or data transfer.

[0043] In some embodiments, it is convenient to route electrical pathways within a volume of the brow bar 146. In some embodiments, the brow bar 146 is constructed to provide a channel along its length, within which the electrical pathways are routed. Thus, the brow bar 146 provides one or more sheaths, channels, etc. along its length within which electrical pathways and sensors can be contained. Examples of electrical pathways are, but are not limited to; wires, printed circuit board, flexible printed circuit board, etc. In various embodiments, it is advantageous to mount one or more sensors to the brow bar 146, thereby making an electrical sub-assembly for the frame chassis 132. In some embodiments, additional electrical pathways from the frame chassis 132 are joined with the electrical pathway contained in the brow bar 146. In some embodiments, a flexible electronic circuit is adhered to the underside top face of the

brow bar and exits the brow bar via the left and right sheath cavities. Alternatively, or in combination, fully embedded flexible electronics may be cast into the brow bar with integrated contact points exiting the brow bar near each hinge. These integrated contact points on both sides of the brow bar allow transmission of data or power when in contact with the integrated contact points of the right and left temple. In addition to facilitating connection to electronics, the brow bar can conceal an optional pupil module by a securing flange and allows the user to view a microdisplay via the brow bar pupil aperture.

[0044] In similar fashion the left temple is configured as a left interchangeable temple connected to the front frame of the eyewear with a left hinge-connector. In various embodiments, the left interchangeable temple can contain the same electronics configuration/functionality as the right interchangeable temple or interchangeable temples can contain different electronics configurations and different functionality.

[0045] With continued reference to **Figure 1**, a left temple 164 and right temple 174 are configured as shown at 160. Each of the temples 164 and 174 contain electronics which are configured to provide information and functionality to a user of the eyewear system. As shown at 160, the left temple 164 has a temple door (not shown) removed thereby exposing an electronics package indicated at 186. The temple door secures and protects electronics from environmental exposure and hazard. The temple door is secured to the temple assembly with suitable mechanical fasteners for a given application. In some embodiments, the temple door provides a rating with respect to water intrusion via an **IP** Code from International Protection Marking IEC standard 60529. A source of electrical power (battery) is illustrated at 184 and an audio speaker and port is illustrated at 182. The audio speaker and port 182 is generally located on a posterior end of a temple and in some embodiments is an integrated directional projection

speaker that privately directs sound to a user's ear. Projection stereo speakers can communicate various audio signals to the user, such as but not limited to, voice prompts, streaming music, smart audio assistance, data, etc. Notably, the projection speaker design does not occlude the user's ear. Thus, the user can hear far field sounds and the far field sounds are not degraded as they are with currently available earbud style headphones that occlude a user's ear.

[0046] The right temple 174 is also provided with an electronics package (not shown in the view) contained within the right temple 174. The right temple is provided with an audio speaker with audio speaker port 184, which can be an integrated directional projection speaker. In one or more embodiments, the right temple 174 is configured to accommodate an external assembly 190 that contains a micro display assembly 192. Similarly, the left temple could be configured for the external assembly 190 and the micro display assembly 192.

[0047] In various embodiments, a micro display assembly, such as 192, is a head up display (HUD) Pupil™ Optics Module that houses the optics, electronics, and micro display that form the optical system. The pupil mechanism also may house cables, flexible circuit boards, or wires which exit from a housing into an electronics contact pathway. In one or more embodiments, these electrical pathways are connected to a side of the left temple 174 to enable the user with a see-through head up display external accessory to enhance a visual component of a mobile assisted and/or augmented reality experience.

[0048] In one or more embodiments, wiring which exits the brow bar is concealed in the right and left sheaths of the temples and enters into the right and left temples via the sheath cavities, thereby protecting the wiring from environmental hazards. The area near the contact pathway may also accommodate motion mechanisms for customizing the interpupillary distance of the head-up micro display module.

[0049] In different embodiments, the front frame portion, such as 102 or 132 (**Figure 1**) or any similar structure in the figures below, and the right and left temple portions, such as 104, 114, 134, 144, 164, 174 (**Figure 1**) or any similar structures in the figures below, can be part of a set of interchangeable front frame portions and temple portions each having the same or different combinations of devices, accessories, capabilities and/or functions. At least one of an electronics board, microphones, speakers, battery, camera, heads-up display module, wireless Wi-Fi radio, GPS chipset, LTE cellular radio, multiaxis inertial measurement unit, motion sensor, touch sensor, light and proximity sensors, etc. can be included in desired combinations. Electronics can be further included that permit a user to perform at least one of; wirelessly connecting to a cellular service, a smart phone, a smart watch, a smart bracelet, a mobile computer, and a sensor peripheral. The electronics can further include the ability to; view see-through augmented reality images via a modular head up display (HUD), provide stereo audio content, provide voice and audio notification including music through one or more integrated projection micro-speakers. The front frame electrical contact devices and the temple electrical contact devices can include electrical contact points in or near respective hinge connectors for removable electrical contact with each other for electrically transmitting at least one of; power, electrical signals and data between the temple portions and the front frame portion when the contact points are in an electrically closed position. In some embodiments when assembled together, the front frame hinge connectors, the front frame electrical contact devices, the temple hinge connectors and the temple electrical contact devices can form electromechanical hinges, hinge connectors, assemblies or devices. In some embodiments, system electrical power can be turned off by folding the temple portions into a storage position thereby disconnecting the contact points.

[0050] In some embodiments, at least one of the front frame electronics and the temple electronics can include at least one of a battery, camera, heads-up display module, controller, digital storage electronics, CPU, projection micro-speaker, microphone, wireless Wi-Fi radio, GPS chipset, LTE cellular radio, multiaxis inertial measurement system or unit, and sensory, motion, touch, light, proximity, temperature and pressure sensors, etc.

[0051] In some embodiments, at least one temple can include a temple module insert (TIM) containing selected temple electronics, mounted thereto. In other embodiments, a neck smart cord is electrically connected to a behind the neck electronics module. The neck smart cord has right and left connectors or connector ends for mechanically and or electrically interconnecting the behind the neck electronics module with the right and left temples of an eyewear device.

[0052] **Figure 2** illustrates a reconfigurable component for an eyewear device, according to embodiments of the invention. With reference to **Figure 2** at 200, a temple 202 is provided with an engagement portion 204. A temple insert module, referred to in this description of embodiments as a "TIM" at 210 is configured to be releasably coupleable with the engagement portion 204 of the temple 202. The TIM 210 is installed into the temple 202 as indicated by arrows 212a and 212b. In various embodiments, the engagement portion 204 is accomplished by a mechanical connection, such as but not limited to; press fit, clip, mechanical interlock, hook and loop, magnetic surface, external clamp to temple, flange and mechanical coupling to temple, etc. In yet other embodiments the engagement portion 204 and the TIM 210 utilize magnetic surfaces, thereby holding the TIM 210 secure by magnetic attraction. The form of the engagement portion shown at 204, as well as the form of any engagement portion illustrated elsewhere in the figures presented herein, is given merely for illustration and does not limit

embodiments of the invention. In the view illustrated at 200, the TIM 210 only makes a mechanical connection with the temple 202 no electrical connection is provided between the TIM 210 and the temple 202.

[0053] In some embodiments, the TIM 210 is provided with a speaker and speaker port 214, which can be a micro projection speaker. The speaker provides information to a user through a directed audio broadcast. Note that the speakers provided herein are speakers that are located externally from a user's ear and are therefore not inserted into the user's ear like an earbud is inserted. The TIM 210 is configured with an electronics package that contains a processor, memory, electrical power, and one or more wireless communication protocols that enable the TIM 210 to communicate wirelessly 222 with one or more devices 220. The device 220 can be an external sensor such as, but not limited to; a biometric sensor or a vehicle sensor, a local user device, a network node, such as a wireless router, a remote network, or a remote user device such as a mobile phone accessed through a network. Different sensors, networks, and remote devices are described more fully in conjunction with the figures below.

[0054] Following the architecture of **Figure 2** at 200, in some embodiments, a second temple and a second TIM are provided. The two TIMs in such a system can engage in wireless communication between the device 220 and between themselves as needed to provide a level of design functionality to a user. For example, in one embodiment, a left TIM includes wireless network capability sufficient to communicate with the remote device 220, utilizing a first network protocol. In addition, the left TIM and the right TIM are provided with wireless network capability that supports communication utilizing a second network protocol. In order to conserve electrical power, the first network protocol has a greater range than the second network protocol because a distance between the left TIM and the remote device is greater than a

separation distance between the left TIM and the right TIM (nominally a width of user's head). The architecture illustrated at 200 is referred to as true wireless because there is no wired connection between the left TIM and the right TIM. In one or more embodiments, an audio stream is provided from a user device to a first TIM utilizing a first wireless network. Then a second wireless audio stream is provided from one TIM to the other TIM utilizing a second wireless network in order to provide the audio stream to each of a left and a right projection speakers of the eyewear device.

[0055] The temples and TIMs described at 200 provide reconfigurable components for eyewear devices as described in conjunction with the figures herein. A forward end 206 of the temple 202 is engageable with a frame chassis of an eyewear device as described above with or without a connector between a temple and a frame. Thus, the temple 202 can attain a fixed position relative to a frame chassis or the temple can be rotatably coupled to the frame chassis depending on a give design of the eyewear.

[0056] With reference to **Figure 2** at 250, a temple 252 is provided with an engagement portion 254. A temple insert module, TIM at 260, is configured to be releasably coupleable with the engagement portion 254 of the temple 252. The TIM 260 is installed into the temple 252 as indicated by arrows 262a and 262b. In various embodiments, the engagement portion 204 is accomplished by a combined electrical and mechanical connection. The mechanical connection can be as described in conjunction with 210/204 such as, but not limited to; press fit, clip, mechanical interlock, hook and loop, etc. In yet other embodiments the engagement portion 254 and the TIM 260 utilize magnetic surfaces, thereby holding the TIM 260 secure by magnetic attraction. A number of electrical contacts 280 are provided for illustration with no limitation implied thereby. The electrical contacts 280 mate with corresponding electrical contacts in the

temple 252 thereby providing electrical connection to one or more electrical pathways (not shown) in the temple 252. The electrical pathways within the temple 252 facilitate electrical connection between the TIM 260 and one or more sensors 272 and 274, which can also represent a source of signals provided to a display(s). The sensors 272 and 274 can be acoustic sensors such as microphones or any of the sensors described herein for use in conjunction with electronics packages configured with eyewear devices. In one or more embodiments, one or more of 272 and 274 provide signals to a display such as a HUD.

[0057] In some embodiments, the TIM 260 is provided with a speaker and speaker port 264, which can be a micro projection speaker. The speaker provides information to a user through an open-ear audio broadcast.

[0058] Following the architecture of **Figure 2** at 250, in some embodiments, a second temple and a second TIM are provided, as shown below in **Figure 3**. The two TIMs in such a system engage in wireless communication between the device 220 and between themselves as needed to provide a level of design functionality to a user. The temples and TIMs described at 250 provide reconfigurable components for eyewear devices as described in conjunction with the figures herein. For example, a forward end 256 of the temple 252 is engageable with a frame chassis of an eyewear device as described above with or without a connector between a temple and a frame. Thus, the temple 252 can attain a fixed position relative to a frame chassis or the temple can be rotatably coupled to the frame chassis depending on a given design of the eyewear.

[0059] **Figure 3** illustrates, at 300, multiple reconfigurable components for an eyewear device, according to embodiments of the invention. With reference to **Figure 3** at 300, the left reconfigurable component 250 from **Figure 2** is illustrated with a companion right

reconfigurable component for an eyewear device. A right temple 352 has an engagement portion that is not shown in **Figure 3** but is similar to the engagement portion 254 of the left temple 252. A temple insert module, TIM at 360 is configured to be releasably coupleable with the engagement portion of the temple 352. The TIM 360 is coupled with the temple 352 as indicated by arrows 362a and 362b. In various embodiments, the engagement portion of the temple 352 is accomplished by a combined electrical and mechanical connection. The mechanical connection can be provided as described above in conjunction with 210/204 such as, but not limited to; press fit, clip, mechanical interlock, hook and loop, etc. In yet other embodiments the engagement portion of the temple 352 and the TIM 360 utilize magnetic surfaces, thereby holding the TIM 360 secure by magnetic attraction. Several electrical contacts 380 are provided for illustration with no limitation implied thereby. The electrical contacts 380 mate with corresponding electrical contacts in the temple 352 thereby providing electrical connection to one or more electrical pathways (not shown) in the temple 352. The electrical pathways within the temple 352 facilitate electrical connection between the TIM 360 and one or more sensors 372 and 374. The sensors 372 and 374 can be acoustic sensors such as microphones or any of the sensors or displays described herein for use in conjunction with electronics packages configured with eyewear devices. In various embodiments, the TIM 360 is configured with an electronics package that contains a processor, memory, electrical power, and one or more wireless communication systems using protocols that enable the TIM 360 to communicate wirelessly as indicated by a wireless transmission at 222 with one or more devices 220. In addition, the TIM 360 and the TIM 260 can be configured with wireless communication capability that permits wireless communication between the TIMs as indicated by a wireless transmission at 382. In some embodiments, the TIM 360 is provided with a speaker and a speaker port indicated at 364,

which can be a micro projection speaker. The speaker provides information to a user through an audio broadcast.

[0060] With reference to view 390 of **Figure 3**, electrical connectivity schematics are illustrated for each of TIM 260 and TIM 360. The TIM 260 is electrically coupled to the sensor 272 with an electrical pathway 394. Similarly, the TIM 260 is electrically coupled to the sensor 274 by an electrical pathway 392. The connectivity illustrated between the TIM 260 and the respective sensors constitutes a left temple electrical schematic 384. Note that the left temple electrical schematic 384 can be more complex or less complex that the illustration. Thus, the left temple electrical schematic is provided merely for illustration with no limitation implied thereby.

[0061] Similarly, the TIM 360 is electrically coupled to the sensor 372 with an electrical pathway 398. The TIM 360 is electrically coupled to the sensor 374 by an electrical pathway 396. The connectivity illustrated between the TIM 360 and the respective sensors constitutes a right temple electrical schematic 386. Note that the right temple electrical schematic 386 can be more complex or less complex that the illustration. Thus, the right electrical schematic is provided merely for illustration with no limitation implied thereby.

[0062] The two TIMs in such a system engage in wireless communication between the device 220 and between themselves as needed to provide a level of design functionality to a user. For example, in one embodiment, a left TIM includes wireless network capability sufficient to communicate with the remote device 220, utilizing a first network protocol. In addition, the left TIM and the right TIM are provided with wireless network capability that supports wireless communication as indicated at 382. The wireless communication 382 can be performed with a second network protocol, which is different from that used at 222. In order to conserve electrical power, the first network protocol (222) has a greater range than the second network protocol

(382) because a separation distance between the left TIM 260 and the remote device 220 is greater than a separation distance between the left TIM 260 and the right TIM 360, the latter is nominally a width of user's head and the former can be as much as a distance to a mobile telephone cellular tower.

[0063] **Figure 4** illustrates another reconfigurable modularized eyewear system, according to embodiments of the invention. With reference to **Figure 4**, one or more of sensors, power components, and computational units are distributed throughout an eyewear device, including distributed throughout a frame chassis such as 402. A frame chassis 402 is ophthalmically constructed to encircle lens 440 with frame rims thereby securing the lens 440 thereto. A left temple 404 are a right temple 414 are coupled to the frame chassis 402, thereby forming an eyewear device. The left temple 404 is configured with an engagement portion indicated at 408. A left temple insert module (TIM) 406 is configured as described above to engage with the engagement portion 408, thereby providing both mechanical and electrical connection between the TIM 406 and the temple 404. Similarly, a right temple 426 is illustrated as engaged with the engagement portion of the right temple 414. The TIM 406 contains an audio speaker and audio port indicated at 410 and the TIM 426 contains an audio speaker and audio port indicated at 430. In various embodiments, the audio speakers of 410 and 430 are projection speakers. The eyewear device includes several sensors or display(s), 462, 464, 466, 468, and 470 that are integrated into an electrical pathway that extends from the left temple 404 through the frame chassis 402 to the right temple 414. In various embodiments there can be more sensors or less sensors that those shown in **Figure 4**. The sensors and the locations of the sensors shown in **Figure 4** are provided merely as an illustration and do not limit embodiments of the invention. As described above in conjunction with the previous figures, at least one of the

temple insert modules, 406 and or 426, are provided with a suite of electronics necessary to provide wirelessly connectivity 222 to a device 220.

[0064] In the eyewear device of 400, a high-level view of an electrical pathway schematic is shown at 480. With reference to 480, the left TIM 406 and the right TIM 426 are electrically coupled with sensors 462, 464, 466, 468, and 470 by electrical pathway elements 482, 484, 486, 488, 490, and 492. An electrical pathway element, such as 484, electrically connects the sensor 464. Together, the components shown in 480 provide a modularized reconfigurable set of components for an eyewear device. In one or more embodiments, one or more acoustic sensors are located in at least one of, the frame chassis 402, the left temple 404, and the right temple 414. Thus, acoustic sensors can be located anywhere on a temple (left or right) or a frame chassis of the eyewear device.

[0065] **Figure 5** illustrates, generally at 500, a perspective view and a top view of the modularized eyewear system from **Figure 4**, according to embodiments of the invention. With reference to **Figure 5**, a modularized eyewear device is illustrated in perspective view at 502. A modularized nose pad 504 is releasably couplable as indicated at 506 with the modularized eyewear device 502. Modularization of nose pads permits a user to swap nose pads in order to improve the fit between the eyewear and the user's nose and facial structure. A greater level of comfort can be achieved through modularization of the nose pad of the eyewear device. In addition, other sensors such as a biometric sensor can be provided in the nose pad.

[0066] **Figure 6A** illustrates, generally at 600, a system architecture for a modularized eyewear device, according to embodiments of the invention. With reference to **Figure 6A**, in various embodiments, a modularized reconfigurable eyewear device can contain more than one wireless communication system. In various embodiments, an eyewear device 602 has a high-

level block diagram architecture as shown at 604. In various embodiments, the eyewear device 602 is configured to communicate with a wireless sensor 640 and a mobile device 670. The wireless sensor 640 can contain a single sensor or a plurality of sensors. The wireless sensor 640 can contain any one or more of the sensors listed herein without limitation. For example, the wireless sensor 640 can include a biometric sensor or biomechanical sensor configured for use with a user or a sensor configured for use with a vehicle or building. Some examples of biometric sensors are, but are not limited to; a heart rate monitor, a perspiration sensor, a temperature sensor, etc. Some examples, of vehicle sensors are, but are not limited to; a velocity sensor, an acceleration sensor, a global position system signal, a vehicle engine parameter, a wind speed indicator, etc. Some examples of sensors for use with a building are, but are not limited to; a temperature reading from a thermostat, a water pressure value, etc. Some non-limiting examples of vehicles are, but are not limited to; a scooter, bicycle, an automobile, a boat, a yacht, a watercraft, an airplane, a military vehicle, a wing suit, etc. In some embodiments, data is received at 640 and or 616 from a special use network. An example, of a special use network, given for illustration with no imitation implied thereby, is a National Marine Electronics Association (NMEA) NMEA 2000 network designed for watercraft such as yachts (power or sail). NMEA 2000, also referred to in the art as "NMEA2k" or "N2K" is standardized as International Electrotechnical Commission (IEC) 61162-1. NMEA 200 is a plug-and-play communications standard used for connecting marine sensors and display units within ships, boats, yachts, etc. The mobile device 670 can be any one or more of the mobile devices listed herein without limitation. For example, the mobile device can be a mobile phone, a watch, a wrist band, a bracelet, a tablet computer, a laptop computer, a desktop computer, a vehicle computer, etc.

[0067] The eyewear device 602 has a high-level architecture, represented at 604, that contains a speaker 606, a central processing unit 608, a source of electrical power 610, an acoustic sensor 608, a storage device 614, and a wireless communication system 616. Wireless communication system 616 can contain one or more of the following wireless communication systems, e.g., a near-field communication system 618, a wireless communication system utilizing the Bluetooth communication protocol 620, a wireless communication system utilizing the Wi-Fi communication protocol at 624, a mobile telephone communications protocol 622. The wireless communication protocol designated by LTE at 622 is given merely as an example for wireless devices and does not limit embodiments of the invention. Those of skill in the art will recognize that one or more antennas are included, but not shown for clarity, in the wireless communication system block 616.

[0068] The wireless sensor 640 has a high-level architecture, represented at 642, that includes one or more sensors 644 and a wireless communication system 646. The wireless communications system 646 can be a low data rate communications system such as a near-field communications system, BLE, ANT+, or the like. Or the wireless communication system 646 can be provided as a higher data rate system as required by the sensor(s) 644.

[0069] The mobile device 670 has a high-level architecture, represented at 672, that includes, a central processing unit 674, a source of electrical power 676, storage 678, and one or more wireless communication systems indicated at the block 680. The mobile device 670 can be optionally configured to reach remote networks as indicated by cloud 689. The wireless communication block 680 can include one or more of the following wireless communication systems, e.g., a near-field communication system 682, a wireless communication system utilizing the Bluetooth communication protocol 684, a wireless communication system utilizing the Wi-Fi

communication protocol at 686, and a mobile telephone communications protocol at 688. The wireless communication protocol designated by LTE at 688 is given merely as an example of a communication system for mobile devices and does not limit embodiments of the invention. Those of skill in the art will recognize that one or more antennas are included, but not shown for clarity, in the wireless communication system block 680 and 642.

[0070] In some embodiments, the wireless sensor system 642 and the eyewear device 602 are configured initially by a user of the mobile device 670 and the mobile device user interface as indicated by pathways 652a and 652b. In operation, the eyewear device 602 receives data wirelessly as indicated at 650 from a suitable wireless communication system, such as for example a near-field communications system 618. Wireless data obtained from the wireless sensor system 642 can be transmitted to the user device 670/672 by another wireless communication system such as indicated at 654. The wireless communication indicated at 654 can be accomplished with a higher data rate channel using for example Bluetooth protocol at 620/684, or Wi-Fi protocols at 624/686, or mobile phone communications protocol indicated at 622/688. Data transferred from the eyewear device 602 can be stored and analyzed on the user device 670 in various embodiments and with different application programs.

[0071] **Figure 6B** illustrates, generally at 690, wireless networks corresponding to the system architecture for the modularized eyewear device of **Figure 6A**, according to embodiments of the invention. With reference to **Figure 6B**, the wireless communication block 616 can connect to a plurality of devices as shown in the figure. For example, one or more wireless sensors 640 can connect to the wireless communication block 616 utilizing low data rate near-field communication networks as indicated at 618. One or more user devices 670 can communicate wirelessly with the wireless communication block using Bluetooth communication

protocols as indicated at 620. One or more wireless nodes, such as Wi-Fi nodes indicated at 692 can communicate wirelessly with the wireless communication block 616 as indicated at 624. One or more remote networks 694 can communicate wirelessly with the wireless communication block 616 using cellular communication protocols as indicated at 622. Thus, a reconfigurable eyewear device can contain one or more of the wireless communication systems shown in the illustration at 690. An eyewear device can be reconfigured for different wireless communication by swapping for example one TIM module for another. Alternatively, one or more temples can be swapped with a frame chassis as described above to provide customized functionality to an eyewear device.

[0072] **Figure 7** illustrates, generally at 700, another system architecture for the modularized eyewear device of **Figure 4**, according to embodiments of the invention. With reference to **Figure 7**, the wireless communication block 616 of the eyewear device 602 can be configured for cellular communications via mobile telephone networks directly without needing a user device to function as an intermediary. For example, in 700, the eyewear device 602 is configured for communication with a remote device 702, which can be a mobile telephone, by a wireless communication system 622 thereby connecting with the remote device 702 directly through the external networks indicated by cloud 704. No intermediary user mobile device is needed to support this line of communication. Such a configuration of an eyewear device allows a user of the eyewear device to make telephone calls from the eyewear device with the assistance of an interface, such as a voice interface, one or more tactile interface like buttons, etc. The voice interface provides command and control of the telephone call by converting the user's voice signals to commands that the device uses to facilitate the operation of the wireless network

for the telephone call. Examples of such commands are, but are not limited to; select caller, place call, volume up, volume down, end call, etc.

[0073] **Figure 8** illustrates, generally at 800, a block diagram of a temple insert module (TIM), according to embodiments of the invention. With reference to **Figure 8**, as used in this description of embodiments, a TIM can be based on a device such as a computer, in which embodiments of the invention may be used. The block diagram is a high-level conceptual representation and may be implemented in a variety of ways and by various architectures. Bus system 802 interconnects a Central Processing Unit (CPU) 804 (alternatively referred to herein as a processor), Read Only Memory (ROM) 806, Random Access Memory (RAM) 808, storage 810, audio 822, user interface 824, and communications 830. RAM 808 can also represent dynamic random-access memory (DRAM) or other forms of memory. The user interface 824 can be in various embodiments a voice interface, a touch interface, a physical button, or combinations thereof. It is understood that memory (not shown) can be included with the CPU block 804. The bus system 802 may be for example, one or more of such buses as a system bus, Peripheral Component Interconnect (PCI), Advanced Graphics Port (AGP), Small Computer System Interface (SCSI), Institute of Electrical and Electronics Engineers (IEEE) standard number 994 (FireWire), Universal Serial Bus (USB), universal asynchronous receiver-transmitter (UART), serial peripheral interface (SPI), inter-integrated circuit (I2C), etc. The CPU 804 may be a single, multiple, or even a distributed computing resource. Storage 810 may be flash memory, etc. Note that depending upon the actual implementation of a TIM, the TIM may include some, all, more, or a rearrangement of components in the block diagram. Thus, many variations on the system of **Figure 8** are possible.

[0074] Connection with one or more wireless networks 832 is obtained via communication (COMM) 830, which enables the TIM 800 to communicate wirelessly with local sensors, local devices, as well as with remote devices on remote networks. In some embodiments, 832/830 provide access to remote voice-to-text conversion systems which can be in remote locations for example cloud based. 832 and 830 flexibly represent wireless communication systems in various implementations, and can represent various forms of telemetry, general packet radio service (GPRS), Ethernet, Wide Area Network (WAN), Local Area Network (LAN), Internet connection, Wi-Fi, WiMAX, ZigBee, Infrared, Bluetooth, near-field communications, mobile telephone communications systems, such as 3G, 4G, LTE, 5G, etc. and combinations thereof. In various embodiments, a touch interface is optionally provided at 824. Signals from one or more sensors are input to the system via 829 and 828. Global position system (GPS) information is received and is input to the system at 826. Audio 822 can represent a speaker such as a projection speaker or projection micro-speaker described herein.

[0075] In various embodiments, depending on the hardware configuration different wireless protocols are used in the networks to provide the systems described in the figures above. One non-limiting embodiment of a technology used for wireless signal transmission is the Bluetooth wireless technology standard which is also commonly known as IEEE 802.15.1 standard. In other embodiments, the wireless signal transmission protocol known as Wi-Fi is used which uses the IEEE 802.11 standard. In other embodiments, the ZigBee communication protocol is used which is based on the IEEE 802.15.4 standard. These examples are given merely for illustration and do not limit different embodiments. Transmission Control Protocol (TCP) and Internet Protocol (IP) are also used with different embodiments. Embodiments are

not limited by the data communication protocols listed herein and are readily used with other data communication protocols not specifically listed herein.

[0076] In various embodiments, the components of systems as well as the systems described in the previous figures (such as a temple insert module (TIM)) are implemented in an integrated circuit device, which may include an integrated circuit package containing the integrated circuit. In some embodiments, the components of systems as well as the systems are implemented in a single integrated circuit die. In other embodiments, the components of systems as well as the systems are implemented in more than one integrated circuit die of an integrated circuit device which may include a multi-chip package containing the integrated circuit

[0077] **Figure 9** illustrates a modularized eyewear device fitted with a behind the neck module assembly, according to embodiments of the invention. With reference to **Figure 9**, at 900, a behind the neck module assembly is fitted to a passive set of eyewear. Passive eyewear indicates that there are no electronics located in the eyewear. Alternatively, the eyewear can be active or powered eyewear, as described herein, configured with electronics packaged into one or more temples or temple insert modules (TIMs). The eyewear has a frame chassis 902 that contains lens 906. Coupled to the frame chassis 902 is a left temple 904 and a right temple 914. The behind the neck module assembly includes a behind the neck electronics pod (ePOD) 924, a left temple interlock 920 a right temple interlock 922, a left smart cord 926 and a right smart cord 928. The left smart cord 926 couples electrically and mechanically the ePOD 924 to the left temple interlock 920 and the right smart cord couples electrically and mechanically the ePOD 924 to the right temple interlock 922.

[0078] The left temple interlock 920 contains an acoustic cavity, an audio speaker, and an acoustic port. The acoustic port for the left audio speaker is indicated at 930. The left smart

cord 926 contains electrical conductors that provide an audio signal for the audio speaker contained within the left temple interlock 920. In one or more embodiments, the audio speaker contained in the left temple interlock is a micro-projection speaker. Similarly, the acoustic port for the right audio speaker is indicated at 932. The right smart cord 928 contains electrical conductors that provide an audio signal for the audio speaker contained within the right temple interlock 922. In one or more embodiments, the audio speaker contained in the right temple interlock is a micro-projection speaker

[0079] In various embodiments, the ePOD 924 contains an electronics unit. The electronics unit contains the electronic components and functionality described herein for a temple insert module (TIM). In other words, the electronics unit is a TIM mechanically and electrically packaged for use in a behind the neck module assembly.

[0080] Electronics units having different electronic configuration and functionality can be swapped in and out of the ePOD in similar fashion to the way different TIMs are swapped into and out of a temple of an eyewear device.

[0081] At 950 a length adjustment is provided to shorten or lengthen the right smart cord and the left smart cord. A behind the neck electronics pod (ePOD) 954 is configured with a left smart cord 956 and a right smart cord 958 exiting the same end of the ePOD 954. Such a configuration of the smart cords 956 and 958 permit a slider 960 to move either away from the ePOD or toward the ePOD. Moving the slider 960 away from the ePOD 954 shortens the available free length of the smart cords 965/958. Moving the slider 960 towards the ePOD 954 increases the available free length of smart cords 956/958.

[0082] In one or more embodiments, in operation when in an "on" state, audio data is streamed to the electronics unit in the ePOD 924 and is directed to the left and right speakers for

broadcast to a user when the behind the neck module assembly is installed on an eyewear device and the user wears the eyewear device.

[0083] **Figure 10** illustrates, generally at 1000, a behind the neck module assembly in perspective view configured with a wearable device, according to embodiments of the invention. With reference to **Figure 10**, a first sensor 1050 is illustrated on the ePOD 924. A second sensor 1052 is illustrated incorporated into the right temple interlock 922. A third sensor 1054 is illustrated incorporated into the left temple interlock 920. The sensors 1050, 1052, and 1054 can be any of the sensors described herein previously described for use in a TIM or directly in electronics built into a temple.

[0084] In the embodiment shown in **Figure 10**, each temple interlock module, i.e., 920 and 922 contains a through hole into which a temple of the eyewear is inserted. In this embodiment, the temple interlock modules 920 and 922 are made from a compliant material such as an elastomer or rubber that permits elongation sufficient for a temple to be inserted therethrough. For example, the left temple interlock 920 contains a through hole 1040 into which the left temple 904 is inserted. The right temple interlock 922 contains a through hole 1042 into which the right temple 914 is inserted. Each of the temple interlocks 920 and 922 are positioned on a pair of compatible eyewear such that each of the speaker ports 930 and 932 are positioned in front of and near to a user's ear. Compatible eyewear is eyewear that is compatible with the mechanical attachment provided by the temple interlocks.

[0085] **Figure 11** illustrates, generally at 1100 and 1150, coupling a temple interlock to a temple according to embodiments of the invention. With reference to **Figure 11**, at 1100 a magnetic temple interlock is illustrated. The magnetic temple interlock includes a magnetic region 1108 on a temple 1102 of an eyewear device. A temple interlock 1104 has a

corresponding magnetic region 1106. In operation, the magnetic regions 1106 and 1108 are brought together, thereby causing the magnetic regions 1106 and 1108 to attract each other which provides a clamping force between the temple interlock 1104 and the temple 1102. A port of an acoustic cavity that contains a speaker is illustrated at 1110.

[0086] Another method of clamping is illustrated at 1150. A temple interlock 1152 contains a slot 1158 between a first side 1156a and a second side 1156b of compliant material. The geometry of 1158, 1156a, and 1156b forms a U shape into which a temple of an eyewear device can be inserted. The elasticity of the material 1152 provides a releasable coupling between the temple interlock 1152 and the temple of the eyewear (not shown). An acoustic port of an acoustic cavity that houses a speaker is indicated at 1154.

[0087] **Figure 12** illustrates, generally at 1200, coupling a behind the neck module to electronics contained within a temple, according to embodiments of the invention. With reference to **Figure 12**, a behind the neck module assembly is coupled to electronics contained within a temple. A portion of a behind the neck module assembly is illustrated with a behind the neck electronics pod (ePOD) 1220, a left smart cord 1222, and a left temple interlock 1210. Any of the electronics contained with a temple, as previously described, can be contained directly within a temple without a temple insert module (TIM). Or alternatively, the electronics contained with the temple can be electronics that are part of a TIM, as indicated optionally at 1204. An acoustic port 1230 is illustrated within the temple 1202. The acoustic port 1230 permits sound generated by a speaker located there behind to be emitted therethrough for hearing by the user. Alternatively, the acoustic port 1230 can be located within the TIM 1204. In various embodiments, a temple 1202 is provided with a number of electrical contacts indicated at 1206. A corresponding number of electrical contacts 1208 are provided in the left temple

interlock 1210. A mechanical interlock between the temple 1202 and the left temple interlock 1210 is provided to make the connection between 1210 and 1202 releasably couplable. In one or more embodiments a magnetic coupling is provided near or at the location of 1206/1208 to provide a releasable coupling thereto.

[0088] **Figure 13** illustrates, generally at 1300, a schematic for combining a behind the neck module assembly with temple electronics, according to embodiments of the invention. With reference to **Figure 13**, an outline of an eyewear device is indicated at 1302. The eyewear device 1302 contains electronics and or electronic pathways in a left temple, a right temple, and a frame chassis. The outline 1302 encompasses the frame chassis, left temple, and right temple. In the system depicted in the figure, an electronics path 1308 extends between the left temple and the right temple of the eyewear device 1302.

[0089] The eyewear device contains a left temple insert module (TIM) 1304 located in a left temple and a right TIM 1306 located in a right temple. A behind the neck module assembly with electronics unit (ePOD) is indicated at 1310. A left smart cord 1312 provides an electrical pathway between the ePOD 1310 and the left TIM 1304. A right smart cord 1314 provides an electrical pathway between the ePOD 1310 and the right TIM 1306. In various embodiments both the left TIM 1304 and the right TIM 1306 are configured with one or more wireless communication network systems that permit wireless communication between the left TIM 1304 and the right TIM 1306 as indicated at 1316. A remote device 1320 is representative of one or more wireless sensors or wireless user devices as described above in conjunction with the preceding figures. Wireless communication 1322 is accomplished between the remote device 1320 and at least one of the left TIM 1304, the right TIM 1306, and the ePOD 1310. All of the

electronic system functionality described above with respect to a TIM is applicable to an ePOD such as ePOD 1310.

[0090] In some embodiments, a left temple is not electrically connected to a right temple, in such as case the electrical path 1308 is removed from the electrical schematic shown in 1300.

[0091] **Figure 14** illustrates, generally at 1400, a user interface on a behind the neck module assembly, according to embodiments of the invention. With reference to **Figure 14**, a behind the neck electronics pod (ePOD) is illustrated at 1402. The ePOD 1402 has a display interface 1404. The display interface 1404 can be implemented in various ways in different embodiments. In some embodiments the user interface is a tactile surface button. In some embodiments, the user interface is implemented with a touch screen, such as a capacitive touch screen presenting one or more controls to a user. In some embodiments, the user interface communicates information to a user. In yet other embodiments, the user interface communicates information to a person who views the user interface 1404 from behind the user who is wearing the ePOD 1402. An example of such information is, but is not limited to, an emoji, mood status, icon, etc. as indicated at 1406.

[0092] **Figure 15** illustrates, generally at 1500, a block diagram for an electronics unit configured for a behind the neck electronics pod (ePOD), according to embodiments of the invention. With reference to **Figure 15**, as used in this description of embodiments, a behind the neck electronics unit can be based on a device such as a computer, in which embodiments of the invention may be used. The block diagram is a high-level conceptual representation and may be implemented in a variety of ways and by various architectures. Bus system 1502 interconnects a Central Processing Unit (CPU) 1504 (alternatively referred to herein as a processor), Read Only Memory (ROM) 1506, Random Access Memory (RAM) 1508, storage 1510, audio 1522, user

interface 1524, and communications 1530. RAM 1508 can also represent dynamic random-access memory (DRAM) or other forms of memory. The user interface 1524 can be in various embodiments a voice interface, a touch interface, a physical button, or combinations thereof. It is understood that memory (not shown) can be included with the CPU block 1504. The bus system 1502 may be for example, one or more of such buses as a system bus, Peripheral Component Interconnect (PCI), Advanced Graphics Port (AGP), Small Computer System Interface (SCSI), Institute of Electrical and Electronics Engineers (IEEE) standard number 994 (FireWire), Universal Serial Bus (USB), universal asynchronous receiver-transmitter (UART), serial peripheral interface (SPI), inter-integrated circuit (I2C), etc. The CPU 1504 may be a single, multiple, or even a distributed computing resource. Storage 1510 may be flash memory, etc. Note that depending upon the actual implementation of a behind the neck electronics unit, the behind the neck electronics unit may include some, all, more, or a rearrangement of components in the block diagram. Thus, many variations on the system of **Figure 15** are possible.

[0093] Connection with one or more wireless networks 1532 is obtained via communication (COMM) 1530, which enables the behind the neck electronics unit 1500 to communicate wirelessly with local sensors, local devices, as well as with remote devices on remote networks. In some embodiments, 1532/1530 provide access to remote voice-to-text conversion systems which can be in remote locations for example cloud based. 1532 and 1530 flexibly represent wireless communication systems in various implementations, and can represent various forms of telemetry, general packet radio service (GPRS), Ethernet, Wide Area Network (WAN), Local Area Network (LAN), Internet connection, Wi-Fi, WiMAX, ZigBee, Infrared, Bluetooth, near-field communications, mobile telephone communications systems, such

as 3G, 4G, LTE, 5G, etc. and combinations thereof. In various embodiments, a touch interface is optionally provided at 1524. An optional display is provided at 1520. Signals from one or more sensors are input to the system via 1529 and 1528. Global position system (GPS) information is received and is input to the system at 1526. Audio 1522 can represent a speaker such as a projection speaker or projection micro-speaker described herein.

[0094] In various embodiments, depending on the hardware configuration different wireless protocols are used in the networks to provide the systems described in the figures above. One non-limiting embodiment of a technology used for wireless signal transmission is the Bluetooth wireless technology standard which is also commonly known as IEEE 802.15.1 standard. In other embodiments, the wireless signal transmission protocol known as Wi-Fi is used which uses the IEEE 802.11 standard. In other embodiments, the ZigBee communication protocol is used which is based on the IEEE 802.15.4 standard. These examples are given merely for illustration and do not limit different embodiments. Transmission Control Protocol (TCP) and Internet Protocol (IP) are also used with different embodiments. Embodiments are not limited by the data communication protocols listed herein and are readily used with other data communication protocols not specifically listed herein.

[0095] In various embodiments, the components of systems as well as the systems described in the previous figures (such as a behind the neck electronics unit) are implemented in an integrated circuit device, which may include an integrated circuit package containing the integrated circuit. In some embodiments, the components of systems as well as the systems are implemented in a single integrated circuit die. In other embodiments, the components of systems as well as the systems are implemented in more than one integrated circuit die of an integrated circuit device which may include a multi-chip package containing the integrated circuit.

[0096] In various embodiments, the descriptions of embodiments provided herein provide reconfigurable components for head wearable devices. Reconfigurable components for head wearable devices include, but are not limited to, removable temples, removable temple insert modules (TIMs), a behind the neck module assembly, an electronics pod ePOD for a behind the neck module assembly and removable electronics units for ePODs.

[0097] In various embodiments, running on the data processing system(s) created with respect to various TIMs (800 in **Figure 8**) or with respect to various behind the neck electronics units (1500 in **Figure 15**) are one or more algorithms that provide useful functionality to a user. These algorithms are described below in conjunction with the following figures as procedures or synonymously methods and it will be understood by those of ordinary skill in the art that the algorithms may be run on hardware that is distributed across the systems in different ways. For example, in some embodiments, the algorithm will run on the hardware contained within a TIM or within a behind the neck electronics unit. In other embodiments, the algorithm or parts of the algorithm will run on a combination of a TIM and a device such as the devices 220, 670, 702, 1320, etc., shown in the figures above, or on a combination of a TIM, a device (220, 670, 702, 1320, etc.), and cloud based hardware and services available through one or more communication networks as described above in conjunction with the preceding figures. Similarly, in other embodiments, an algorithm or parts of the algorithm will run on a combination of a behind the neck electronics unit and a device such as the devices 220, 670, 702, 1320, etc., shown in the figures above, or on a combination of a behind the neck electronics unit, a device (220, 670, 702, 1320, etc.), and cloud based hardware and services available through one or more communication networks as described above in conjunction with the preceding figures.

[0098] **Figure 16** illustrates, generally at 1600, a personal projection micro speaker system (PPMS) in a cross-sectional view, according to embodiments of the invention. With reference to **Figure 16**, a chamber 1602 is defined by an inner surface 1604. A chamber wall 1608 has an outer surface 1606 and an acoustic port 1610. A micro speaker 1612 is mounted within the chamber 1602 and is configured to receive electronic signals which are then converted into airborne acoustic signals by a moving surface of the micro speaker 1612. Airborne acoustic signals are equivalently referred to in the art as "sound waves," which are indicated at 1614. The terms "airborne acoustic signals" and "acoustic signals," "audio signals," "sound waves," etc. are used synonymously in this description of embodiments. Acoustic signals 1614 are directed by the system of 1600 toward a user's ear indicated at 1616 to provide a personal listening experience for the user, while at the same time, minimizing the acoustic signals 1614 that are audible to other people proximate to the user. The chamber 1602 is also referred to herein synonymously as a micro chamber or a micro acoustic chamber, etc. All such terms are used interchangeably in this description of embodiments. The micro speaker 1612 is refereed to herein synonymously as a micro-projection speaker or simply a speaker. It will be understood by those of ordinary skill in the art that the chamber is a small chamber designed to house a small speaker in order to provide a personalized listening experience to a user through a personal projection micro speaker system (PPMS).

[0099] An end view of the PPMS system is illustrated at 1650. Note that the outer dimensions of the chamber wall 1608 are nominally indicated in **Figure 16** as; width "W," height "H," and length "L." In various embodiments, the chamber 1602 can be sized as needed for the various applications in which PPMS systems are used. Thus, the chamber dimensions are qualitative in nature and are not meant to limit embodiments of the invention. No absolute value

or relative absolute values for dimensions of the chamber should be inferred therefrom. For example, PPMS systems are used within a temple of an eyewear device, a temple insert module (TIM) of an eyewear device, or in a temple interlock used in conjunction with a behind the neck module as described in conjunction with the figures above and are configured as needed for those applications. Note that PPMS systems can be incorporated into eyewear devices that have removable components and PPMS systems can be incorporated into eyewear devices that are configured with non-removable components. In various embodiments, the acoustic signals that are delivered through the PPMS systems are provided in stereo mode or in monoaural mode.

[00100] The inner surface 1604 forms a generally concave surface with respect to the speaker 1612. In some embodiments, the surface is generally parabolic. In other embodiments, the chamber is generally rectangular is shape. Within the description of embodiments presented herein, various chambers are illustrated with different interior shapes. These different shapes are provided as illustrations and do not limit embodiments of the invention. Note also that a chamber such as 1602 can be divided into multiple chambers where each chamber is configured with one or more micro speakers. There can be for example, in some embodiments, a first chamber that houses a speaker(s) used to generate a low range of acoustic frequencies and a second chamber that houses a speaker(s) used to generate a higher range of acoustic frequencies. In some embodiments, there are multiple chambers in which one or more chambers do not have a speaker installed therein and one or more chambers that do have a speaker(s) installed therein.

[00101] The chamber wall 1608 is illustrated in **Figure 16** with one layer. However, in various embodiments, a chamber is made with multiple layers and the multiple layers can be provided with different acoustical properties. For example, in one or more embodiments, a material for the chamber wall 1608 and the inner surface 1604 are selected during manufacture

to provide a high degree of acoustic reflectivity to incident acoustic energy, thereby serving to reflect and to concentrate emission of acoustic signals 1614 through the acoustic port 1610. Examples of some materials with a high degree of acoustic reflectivity and hypoallergenic properties are, but are not limited to; plastics, such as, thermoplastics, acrylonitrile butadiene styrene (ABS), cellulose acetate, polyamide, nylon, polycarbonate, carbon epoxy resin, metals, including titanium, aluminum, etc. Temples, TIMs, temple interlock devices can be made using injection molding manufacturing techniques. Thermoplastics can also be used in injection molding processes to make the temples, TIMs, or temple interlock devices. Plastics such as Acetate are used in some embodiments to make the temples, TIMs, or temple interlock devices described herein. In some embodiments, the outer surface 1606 is coated with a layer of material that is designed to absorb vibrational energy, thereby isolating a user from undesirable vibrations of the chamber 1608 which can be generated by the speaker 1612. Such materials are characterized by a high mechanical loss factor and a low Young's modulus. Examples of some materials that absorb vibrational energy are, but are not limited to an elastomer, polyurethane foam, melamine foam, butyl rubber, halobutyl rubber, etc.

[00102] **Figure 17** illustrates, generally at 1700, another personal projection micro speaker system, in a cross-sectional view, according to embodiments of the invention. With reference to **Figure 17**, a chamber wall 1708 has an inner surface 1704 and an outer surface 1706. The inner surface 1704 defines a chamber 1702, within which a speaker 1712 is mounted. In various embodiments, the speaker 1712 is mounted to an inner surface 1704 of the chamber wall 1708 with mounts that are not shown in order to maintain clarity in the illustration. The chamber wall 1708 has an acoustic port 1710 for the emission of acoustic signals 1714.

[00103] In operation, the micro speaker 1712 is configured to receive electronic signals which are then converted into airborne acoustic signals by a moving surface of the micro speaker 1712. The inner surface 1704 together with the acoustic port 1710 concentrate the acoustic signals 1714 in a direction of a user 1716. A direction α indicated at 1718, of the acoustic signals relative to the user 1716, is measured from a reference 1720. Note that α can span a range of angles and is not limited to those angles shown in the figures. **Figure 16** illustrates α equal to approximately zero. While **Figure 17** illustrates α nominally in the range of 0 to 90 degrees. Preferably, α is selected in light of a given geometry of the system 1700 in relationship to placement on a user's head.

[00104] An end view "A," corresponds to the cross-sectional view in 1700 and illustrates an end view of the eyewear device that the PPMS system is embedded into. The system can be embedded into a temple of the eyewear device, a temple insert module (TIM) of the eyewear device, a temple interlock module, etc.

[00105] **Figure 18** illustrates, generally at 1800, a personal projection micro speaker system utilizing multiple speakers in a cross-sectional view, according to embodiments of the invention. With reference to **Figure 18**, a chamber wall 1808 has an inner surface 1804 and an outer surface 1806. The inner surface 1804 defines a chamber 1802, within which, speakers 1812a through 1812b are mounted. In various embodiments, the speakers 1812a through 1812b are mounted to the inner surface 1804 of the chamber wall 1808 with mounts that are not shown in order to maintain clarity in the illustration. The chamber wall has an acoustic port 1810 for the emission of acoustic signals 1814.

[00106] In operation, the micro speakers 1812a through 1812b are configured to receive electronic signals which are then converted into airborne acoustic signals by moving surfaces of the micro speakers 1812a through 1812b. The inner surface 1804 together with the acoustic port 1810 concentrate the acoustic signals 1814 in a direction of a user 1816. A direction α indicated at 1818, of the acoustic signals relative to the user 1816, is measured from a reference 1820. Note that, as described above in conjunction with the preceding figures, α can span a range of angles and is not limited to those angles shown in the figures. For example, **Figure 16** illustrates α equal to approximately zero. **Figure 17** and **Figure 18** illustrates α nominally in the range of 0 to 90 degrees. Preferably, α is selected in light of a given geometry of the system 1700 in relationship to placement on a user's head.

[00107] A symbol "N," on 1812b, indicates a general number of speakers. One or more speakers form a speaker arrangement and are provided within the chamber 1802 as described above. Note that the speakers are represented on the figures herein with a rectangular shape, however no limitation is implied thereby. In various embodiments, a speaker(s) can have a square shape, a rectangular shape, a round shape, etc. Speakers used in the embodiments taught herein are typically referred to in the art as electrodynamic speakers. Some non-limiting examples of speakers that are suitable for use herein are, but are not limited to; a Micro-Electro-Mechanical Systems (MEMS) speaker, high performance, high fidelity and lo distortion micro-speakers, etc.

[00108] **Figure 19** illustrates, generally at 1900, a personal projection micro speaker system on a user, according to embodiments of the invention. With reference to **Figure 19**, an

eyewear device 1904 is configured with the personal projection micro speaker system and is shown worn by a user 1902. In the configuration of 1900, the PPMS system is incorporated into a temple of the eyewear device or into a TIM. Acoustic signals 1906 are concentrated and emitted from a chamber of the PPMS system and are incident upon the user's ear at 1908. The geometry of the PPMS system together with an angle α are selected during the design of the system 1900 to project the acoustic signals toward the user's ear canal. Thus, a maximum amount of desired acoustic signals are delivered to the user's ear by the system of 1900.

[00109] **Figure 20** illustrates, generally at 2000, an internal surface of an acoustic chamber, according to embodiments of the invention. With reference to **Figure 20**, an eyewear device 2004 has a PPMs system embedded therein at 2006. An enlarged view of 2006 is illustrated in cross-section at 2050. In various embodiments, the chamber 2052 is configured with an acoustic reflecting surface 2054 having a generally parabolic shape. One or more speakers are positioned at or about approximately the focus 2056 of the generally parabolic shape of the concave sound reflecting surface 2054. In operation, sound waves are directed towards or into the surface 2054 which then reflects and concentrates the sound waves into a generally parallel column of sound waves which travel away from the surface 2054 out the audio port 2060 in the direction of the user's ear canal (for example 1908 in **Figure 19**).

[00110] **Figure 21** illustrates, generally at 2100, an acoustic chamber curved surface of general shape in a cross-sectional view, according to embodiments of the invention. With reference to **Figure 21**, a chamber wall 2108 has an inner surface 2104 and an outer surface 2106. The inner surface 2104 defines a chamber 2102, within which a micro speaker arrangement 2112 is mounted. In various embodiments, the micro speaker arrangement 2112 is

mounted to an inner surface 2104 of the chamber wall 1708 with mounts that are not shown in order to maintain clarity in the illustration. The chamber wall has an acoustic port 2110 for the emission of acoustic signals 2114.

[00111] In operation, the micro speaker arrangement 2112 is configured to receive electronic signals which are then converted into airborne acoustic signals by a moving surface of the micro speaker arrangement 2112. The inner surface 2104 together with the acoustic port 2110 concentrate the acoustic signals 2114 in a direction of a user 2116.

[00112] In various embodiments, the chamber 2102 is configured with an acoustic reflecting surface 2104 having a generally parabolic shape. One or more speakers forming a micro speaker arrangement 2112 are positioned at or about approximately the focus 2114 of the generally parabolic shape of the concave sound reflecting surface 2104. The shape of the surface is indicated by $f(x, y, z)$ and is a generally curved shape, of which, 2104 is a representation of one or more embodiments and does not limit embodiments of the invention. In operation, sound waves are directed towards or into the surface 2104 which then reflects and concentrates the sound waves 2118 into a generally parallel column of sound waves which travel away from the surface 2104 and out the audio port 2110 in the direction of the user's ear canal as represented by 2116.

[00113] **Figure 22** illustrates, generally at 220, variable density structures, according to embodiments of the invention. **Figure 23** illustrates, generally at 2300, in cross-section, a multilayered acoustic chamber wall, according to embodiments of the invention. **Figure 24** illustrates, generally at 2400, a distribution of variable density structures in a temple of an eyewear device, according to embodiments of the invention. Referring collectively to **Figure 22**

through **Figure 24**, in various embodiments, each PPMS system used in conjunction with an eyewear device can have a range of materials with varying material properties in order to provide for both good reflection and emission of acoustic signals in a direction of a user's ear canal, as well as attenuation of acoustic energy or attenuation of vibrational energy in a different direction. For example, a temple portion or a TIM, of an eyewear device, can be constructed with a region of vibration damping material between the speaker arrangement and a front frame portion of an eyewear device. For example, in **Figure 22** vibration damping material is indicated by 2208 extending from an acoustic chamber 2204 forward to a front frame section 2202. Similarly, in **Figure 24**, a temple portion 2410 is forward of an acoustic chamber portion 2404. An acoustical property, ρ_1 indicated at 2412, such as a density of the temple portion 2410 is selected to be lower than an acoustical property, ρ_{AC} indicated at 2406, such as a density of the chamber portion 2404 housing the speaker arrangement of the PPMS system, the relationship between densities is given by the equations at 2424. Such vibration damping material(s) 2412 minimizes transmission of mechanical vibration forward of the speaker arrangement, thereby reducing the effects of mechanical vibration noise on sensors that might be located in such forward sections. In addition thereto, such vibration damping material attenuates vibration through the eyewear device which might annoy a user. Vibration damping material will also attenuate leakage of acoustic signals along unwanted forward directions of the eyewear device.

[00114] Similarly, a temple portion or a TIM, of an eyewear device, can be constructed with a region of vibration damping material between the speaker arrangement and a rear temple portion of an eyewear device. An acoustical property, ρ_2 indicated at 2422, such as a density of the rear temple portion 2420 is selected to be less than an acoustical property, ρ_{AC} indicated at

2406, such as a density of the chamber portion 2404 housing the speaker arrangement of the PPMS system, the relationship between densities is given by the equations at 2424. Such vibration damping material minimizes transmission of mechanical vibration energy in a direction rear of the speaker arrangement, thereby reducing the effects of mechanical vibration noise on sensors that might be located in such rear sections. In addition thereto, such vibration damping material attenuates vibration through the eyewear device which might annoy a user, such as tickling a user's ear. Vibration damping material will also attenuate leakage of acoustic signals along unwanted directions.

[00115] A chamber wall of a PPMS system can be made from layers, as indicated in the cross-section A-A displayed in **Figure 23**. In various embodiments, a chamber 2302 utilizes an inner layer 2308 that provides an inner surface 2304 made with a material that provides a high degree of acoustic reflectivity thereby enhancing sound concentration, emission, and projection of acoustic signals to a user's ear. An outer layer 2310 that is coupled to the inner layer 2308 can be made from a material selected to absorb and attenuate acoustic energy. Materials that provide a high degree of acoustic reflectivity are characterized by a density that is large, as described above. Materials that provide for acoustic absorption are characterized by a density that is low, some of which are described above. In one or more embodiments, the relationship between layers of the chamber are given by equations 2424 (**Figure 24**). A speaker arrangement 2312 is mounted to the chamber wall 2304 with mounts 2314a and 2314b. Mounts 2314a and 2314b can provide vibration isolation between the speaker 2312 and the chamber wall 2303, thereby minimizing vibrational energy that is imparted to the chamber wall 2304 when the speaker 2312 is generating acoustic signals. In some embodiments, an outer layer 2310 of one or more of; an acoustic chamber 2404, a forward temple portion 2410, and a rear temple portion

2420 is made from a plurality of layers, each having an acoustical property which can be different, one from the other, as indicated at 2208 (**Figure 22**) by: $\{\rho_1, \rho_2, \rho_3, \ldots \rho_N\}$, where ρ_1 represents a material property of a first layer up to an Nth layer represented by ρ_N. Thus, material properties are made to vary, in some embodiments in a non-linear way in an eyewear device in order to maximize projection of the acoustic signals to the user's ear canal. Note that PPMS systems are designed and intended to concentrate and to project acoustic signals, e.g. 2206 (**Figure 22**), in the direction of the user's ear and to attenuate acoustic energy and vibration in other directions in order to provide a comfortable and personal listening experience to the user.

[00116] In addition to the inner structural design of the acoustic chamber, the material of the inner wall of the temples that house the electronics and sealed micro speakers are utilized to enhance the directionality of the audible sound that is being emitted to the user. The inner wall material of the overall temple or TIM enclosure can have a variation of its acoustical properties (e.g., density, elastic moduli of elasticity, etc.) to maximize the dampening and reflectivity effects of sound waves emitted by the micro speakers. These materials can have a non-linear variation to optimize the sound wave directionality characteristics with consideration of the location of the material with respect to the ear canal. For example, the material distal to the ear canal (i.e., proximal to the front of the frame of an eyewear device) can have increased dampening properties and the zone that encloses the speaker box (acoustic chamber) and micro speaker (proximal to the ear canal) is designed to increase the sound reflectivity to enhance emission of acoustic energy from the acoustic chamber.

[00117] The dampening effect of material proximal to the front of a frame minimizes mechanical vibration that can translate to leaked sound resulting from, for example, the resonance of the enclosed speaker while emitting audible sound. Furthermore, a layer of damping material can act as an insulator to minimize the tactile sensory effect that such vibrations cause on the listener's body upon contact with the device while being worn. The material layer, or layering that is utilized in the surrounding zone of the micro speaker enclosure can maximize the reflectivity of the audible sound emitted and focally direct the sound to the listener's ear canal. The combination of the variable density material layering in combination with the design of the sealed acoustic chamber maximizes directionality of the projected sound. The material towards the exterior of the temple is also designed to act as an isolation element to avoid audible sound leakage through the rest of the frame.

[00118] **Figure 25** illustrates, generally at 2500, an exploded perspective view of a personal projection micro speaker (PPMS) system in a temple of an eyewear device, according to embodiments of the invention. With reference to **Figure 25**, in one embodiment, a group of components of a temple of an eyewear device that is adapted to house a PPMS system is illustrated. Although described in terms of a right temple, those of ordinary skill in the art will recognize that the description applied to **Figure 25** is applicable to a left temple as well.

[00119] A right temple body 2508 is configured to receive a speaker 2510. A right temple cover 2507 is configured to mate with the right temple body 2508. A right acoustic chamber is formed by a segment 2520 of the right temple body 2508, a segment 2522 of the right temple cover and the right chamber cover 2509. The right chamber cover 2509 provides closure between the right temple body 2508 and the right temple cover 2507. In one or more embodiments, a speaker mount is used to fasten the speaker 2510 to the right temple body 2508.

In one embodiment, in a non-limiting example, double sided tape 2504 is used as a speaker mount. In one embodiment, in a non-limiting example, a speaker stabilizer 2505 is located between the speaker 2510 and the right temple cover 2507. In one embodiment, in a non-limiting example, the speaker stabilizer is made using Ethylene-Vinyl Acetate (EVA) foam. In one embodiment, in a non-limiting example, the right chamber cover 2509 is secured to the right temple 2508 with double sided tape 2503. In one embodiment, in a non-limiting example, the right chamber cover 2509 is stabilized with a stabilizer 2506, which can be made with EVA foam. In one embodiment, in a non-limiting example, the right acoustic chamber having a length indicated by 2520 is divided into two compartments using a divider 2501. The divider 2501 has a slot that permits air to flow from a forward compartment that houses the speaker 2510 to a rear compartment that houses the acoustic port 2530. In one embodiment, in a non-limiting example, a waterproof mesh 2501 is framed around its perimeter and is mounted over the acoustic port 2530 thereby provided a waterproof chamber to seal out water, moisture, dust, dirt, etc. from the right acoustic chamber. EVA foam damps vibration which can minimize transmission of vibration from the speaker into the right temple body 2508 and the right temple cover 2507. In one embodiment, in a non-limiting example, a piece of foam 2502 is located between the speaker 2510 and the divider 2501. In one embodiment, the right temple body 2508 and the right temple cover 2507 are made of molded plastic which has a high density, is a stiff material, is highly reflective to acoustic energy, and provides effective transmission of vibrational energy. To mitigate the undesirable effects of acoustic energy leakage and vibration transmission, a closed cell energy absorbing foam such as EVA is used around the speaker 2510 as illustrated with **Figure 25**.

[00120] **Figure 26** illustrates, generally at 2600, an external sound reflector cover, according to embodiments of the invention. At 2650 the eyewear device from 2600 is shown on a user. As used in this description of embodiments, the terms "external sound cover," external sound reflector," "external reflector cover," "sound cover," "audio reflector," "lobe," and "cover" are used synonymously in this description of embodiments. With reference to **Figure 2600**, an eyewear device 2602 has a right external reflector cover 2606 fixed to a right temple and a left external reflector cover 2604 fixed to a left temple. An external reflector cover or lobe can be added to an eyewear device in a permanent fashion or it can be a removable accessory. An external reflector cover can also be hinged. An external reflector cover provides a further enhancement to the personal audio listening experience by increasing the directionality, and sound vectoring of the acoustic emission to the target listener, i.e., the user. The reflector cover minimizes the audio signals generated by a speaker, emitted from an acoustic chamber, that are not delivered to the user's ear canal. Thereby, reducing the audible sound that becomes noise to non-target listeners, i.e., bystanders.

[00121] A reflector cover can be permanently attached and hinged to a temple of an eyewear device. The listener can rotate the cover and further provide a reflection surface to direct sound to his or her ear canal. While not in use, the listener can retract or remove the cover back to the temple or remove it entirely. The reflector cover can be made from the same material used to make the temples of the eyewear device. Fully removable reflector covers can be provided to a user in a range of sizes, whereby a particular size is selected by the user for use depending on the user's requirements.

[00122] External reflector covers provide an additional benefit by moving windborne turbulent noise away from the audio signals which are broadcast from an acoustic port of a

chamber and away from the user's ear canal. In other words, the effects of a headwind and the associated turbulence induced noise are reduced by the external reflector cover when the listener uses the eyewear device in a dynamic mobile environment where wind conditions can negatively impact the audio performance and directionality of the audio signals. Windborne turbulence from the environment is considered to be noise to a user of a PPMS system, therefore use of an external reflector cover increases a signal-to-noise ratio of the PPMS system by reducing a magnitude of the windborne turbulent noise that a user can hear.

[00123] **Figure 27-28** illustrate, generally at 2700, additional external sound reflector covers and acoustic gain, according to embodiments of the invention. With reference to **Figure 27**, a temple 2702 of an eyewear device has an acoustic port 2704. An external reflector 2706 is attached to the temple 2702 with attachments 2710. Attachments 2710 are accomplished in various ways, one non-limiting example is performed with one or more magnetic contacts. In one or more embodiments, magnetic contacts are used to attach the audio reflector 2706 to the outer surface of a smart glasses temple(s) or temple tip. In other embodiments, different attachment methods, other than magnetic, are employed. Different attachment methods are, but are not limited to; hook and loop fasteners, snaps, clips, etc. The audio reflector 2706 is used to reflect audio signals coming from an acoustic port (speaker outlet) 2704 to a human ear 2708 of a user. A user can attach a single audio reflector to a left temple or to a right temple of the head wearable device or the user can use two audio reflectors (one attached to the left temple and another one attached to the right temple) to improve sound quality and or clarity. This is especially useful in a noisy environment, however, sound quality, clarity, and volume are improved in any environment through the use of an audio reflector.

[00124] **Figure 28** illustrates without any limitation implied thereby, direct wave paths 2802 and reflective wave paths 2804 for various embodiments of the invention. The external sound cover or alternatively described as an audio reflector 2806 is designed taking into consideration that the reflected wave paths 2804 from the audio reflector 2806 and direct wave paths 2804 from a speaker are at the same phase or approximately at the same phase, thereby combining coherently to increase the acoustic signal amplitudes received at the user's ear. Since a distance from a speaker, contained within an acoustic chamber of the temple 2702 to a user's ear (direct path) is very close to a distance from the speaker to the user's ear after reflection from a far end of the acoustic reflector, the direct and the reflected acoustic waves have approximately the same phase. Therefore, the waves combine coherently, in phase, resulting in an increase in sound pressure level on the order of 4 to 5 decibels. Depending on a frequency range of the acoustic signals, the increase in sound pressure level can be up to 6 decibels, i.e., a factor of two (2). Thus, the direct path 2802 and the reflected path 2804 (**Figure 28** at 2800) is functionally equivalent to acoustic signals 2852 illustrated in **Figure 28** at 2850.

[00125] In various embodiments, the audio reflector 2806 is made with an inner part and an outer part. The inner part or inner surface of the audio reflector 2806 causes reflection of the audio signals from the speaker and provides the coherent increase in signal amplitude as described above. The outer part or outer surface of the audio reflector 2806 is used to reflect ambient noise away from the user's ear. Alternatively, the outer surface of the audio reflector can be made with a material that absorbs acoustic energy. Thus, when undesired acoustic signals from the environment are incident upon the outer surface of the audio reflector, the signals are absorbed by the outer surface. In both cases, the acoustic signals from the environment are prevented from reaching the user's ear by the audio reflector through either reflection or

absorption depending on a given design. Acoustic signals from the environment are considered to be noise to a user of a PPMS system, therefore use of an audio reflector increases a signal-to-noise ratio of the PPMS system.

[00126] In one or more embodiments, both the inner part and or the inner surface and the outer part and or the outer surface are made from one or more materials that provide good reflection to acoustic signals incident thereon. Some examples of acoustically reflective materials are, but are not limited to; coated tightly woven fabrics such as vinyl coated polyester, Teflon coated fabrics, molded plastic, etc.

[00127] For purposes of discussing and understanding the different embodiments, it is to be understood that various terms are used by those knowledgeable in the art to describe techniques and approaches. Furthermore, in the description, for purposes of explanation, numerous specific details are set forth in order to provide a thorough understanding of an embodiment. It will be evident, however, to one of ordinary skill in the art that an embodiment may be practiced without these specific details. In some instances, well-known structures and devices are shown in block diagram form, rather than in detail, in order to avoid obscuring various embodiments. These embodiments are described in sufficient detail to enable those of ordinary skill in the art to practice the invention, and it is to be understood that other embodiments may be utilized and that logical, mechanical, electrical, and other changes may be made without departing from the scope of the present invention.

[00128] Some portions of the description may be presented in terms of algorithms and symbolic representations of operations on, for example, data bits within a computer memory. These algorithmic descriptions and representations are the means used by those of ordinary skill in the data processing arts to most effectively convey the substance of their work to others of

ordinary skill in the art. An algorithm is here, and generally, conceived to be a self-consistent sequence of acts leading to a desired result. The acts are those requiring physical manipulations of physical quantities. Usually, though not necessarily, these quantities take the form of electrical or magnetic signals capable of being stored, transferred, combined, compared, and otherwise manipulated. It has proven convenient at times, principally for reasons of common usage, to refer to these signals as bits, values, elements, symbols, characters, terms, numbers, or the like.

[00129] It should be borne in mind, however, that all of these and similar terms are to be associated with the appropriate physical quantities and are merely convenient labels applied to these quantities. Unless specifically stated otherwise as apparent from the discussion, it is appreciated that throughout the description, discussions utilizing terms such as "processing" or "computing" or "calculating" or "determining" or "displaying" or the like, can refer to the action and processes of a computer system, or similar electronic computing device, that manipulates and transforms data represented as physical (electronic) quantities within the computer system's registers and memories into other data similarly represented as physical quantities within the computer system memories or registers or other such information storage, transmission, or display devices.

[00130] An apparatus for performing the operations herein can implement the present invention. This apparatus may be specially constructed for the required purposes, or it may comprise a general-purpose computer, selectively activated or reconfigured by a computer program stored in the computer. Such a computer program may be stored in a computer readable storage medium, such as, but not limited to, any type of disk including floppy disks, hard disks, optical disks, compact disk- read only memories (CD-ROMs), and magnetic-optical disks, read-

only memories (ROMs), random access memories (RAMs), dynamic random access memories (DRAM), electrically programmable read-only memories (EPROM)s, electrically erasable programmable read-only memories (EEPROMs), FLASH memories, magnetic or optical cards, RAID, etc., or any type of media suitable for storing electronic instructions either local to the computer or remote to the computer.

[00131] The algorithms and displays presented herein are not inherently related to any particular computer or other apparatus. Various general-purpose systems may be used with programs in accordance with the teachings herein, or it may prove convenient to construct more specialized apparatus to perform the required method. For example, any of the methods according to the embodiments can be implemented in hard-wired circuitry, by programming a general-purpose processor, or by any combination of hardware and software. One of ordinary skill in the art will immediately appreciate that the embodiments can be practiced with computer system configurations other than those described, including hand-held devices, multiprocessor systems, microprocessor-based or programmable consumer electronics, digital signal processing (DSP) devices, set top boxes, network PCs, minicomputers, mainframe computers, and the like. The embodiments can also be practiced in distributed computing environments where tasks are performed by remote processing devices that are linked through a communications network.

[00132] The methods herein may be implemented using computer software. If written in a programming language conforming to a recognized standard, sequences of instructions designed to implement the methods can be compiled for execution on a variety of hardware platforms and for interface to a variety of operating systems. In addition, the embodiments are not described with reference to any particular programming language. It will be appreciated that a variety of programming languages may be used to implement the teachings of the embodiments as

described herein. Furthermore, it is common in the art to speak of software, in one form or another (e.g., program, procedure, application, driver,...), as taking an action or causing a result. Such expressions are merely a shorthand way of saying that execution of the software by a computer causes the processor of the computer to perform an action or produce a result.

[00133] It is to be understood that various terms and techniques are used by those knowledgeable in the art to describe communications, protocols, applications, implementations, mechanisms, etc. One such technique is the description of an implementation of a technique in terms of an algorithm or mathematical expression. That is, while the technique may be, for example, implemented as executing code on a computer, the expression of that technique may be more aptly and succinctly conveyed and communicated as a formula, algorithm, or mathematical expression. Thus, one of ordinary skill in the art would recognize a block denoting A+B=C as an additive function whose implementation in hardware and/or software would take two inputs (A and B) and produce a summation output (C). Thus, the use of formula, algorithm, or mathematical expression as descriptions is to be understood as having a physical representation in at least hardware and/or software (such as a computer system in which the techniques of the present invention may be practiced as well as implemented as an embodiment).

[00134] Non-transitory machine-readable media is understood to include any mechanism for storing information (such as program code, etc.) in a form readable by a machine (e.g., a computer). For example, a machine-readable medium, synonymously referred to as a computer-readable medium, includes read only memory (ROM); random access memory (RAM); magnetic disk storage media; optical storage media; flash memory devices; except electrical, optical, acoustical or other forms of transmitting information via propagated signals (e.g., carrier waves, infrared signals, digital signals, etc.); etc.

[00135] As used in this description, "one embodiment" or "an embodiment" or similar phrases means that the feature(s) being described are included in at least one embodiment of the invention. References to "one embodiment" in this description do not necessarily refer to the same embodiment; however, neither are such embodiments mutually exclusive. Nor does "one embodiment" imply that there is but a single embodiment of the invention. For example, a feature, structure, act, etc. described in "one embodiment" may also be included in other embodiments. Thus, the invention may include a variety of combinations and/or integrations of the embodiments described herein.

[00136] While the invention has been described in terms of several embodiments, those of skill in the art will recognize that the invention is not limited to the embodiments described, but can be practiced with modification and alteration within the spirit and scope of the appended claims. The description is thus to be regarded as illustrative instead of limiting.

What is claimed is:

1. A method to provide audio signals to a user from an eyewear device, comprising;

generating audio signals within a chamber, the chamber is a part of a volume of the eyewear device;

concentrating the audio signals for delivery to the user's ear; and

transmitting the audio signals to the user's ear, the audio signals are transmitted through a port in the chamber.

2. The method of claims 1, wherein a shape of the chamber contributes to the concentrating.

3. The method of claim 2, wherein the shape provides a curved surface to a speaker, and the speaker is used in the generating.

4. The method of claim 2, wherein the shape is generally parabolic.

5. The method of claim 1, wherein an inner surface of the chamber has a first acoustic reflectivity and at least a portion of the eyewear device has a second acoustic reflectivity, the first acoustic reflectivity is greater than the second acoustic reflectivity.

6. The method of claim 5, the portion absorbs vibrational energy.

7. The method of claim 6, wherein the portion is forward of the chamber.

8. The method of claim 6, wherein the portion is rear of the chamber.

9. The method of claim 6, wherein the portion is an outer surface of the chamber.

10. The method of claim 1, wherein an external sound cover contributes to the concentrating, the external sound cover is attached to the eyewear device.

11. The method of claim 1, wherein a speaker is used in the generating.

12. The method of claim 11, wherein the speaker is located within a temple of the eyewear device.

13. The method of claim 11, wherein the speaker is located within a temple insert module of the eyewear device.

14. An apparatus to provide audio signals to a user from an eyewear device, comprising:

a chamber, the chamber is defined by an interior surface, the chamber is a part of a volume of the eyewear device, the chamber further comprising:

at least one speaker, the at least one speaker to generate audio signals, the at least one speaker is contained within the volume;

an acoustic port, the acoustic port is positioned in a wall of the chamber to concentrate emission of the audio signals from the chamber in a direction of the user's ear when the user wears the eyewear device; and

an outer surface, the outer surface is exterior to the inner surface.

15. The apparatus of claim 14, wherein the interior surface has a larger acoustic reflectivity than an acoustic reflectivity of the outer surface.

15. The apparatus of claim 15, wherein the outer surface is coated with a material that absorbs acoustic energy.

17. The apparatus of claim 14, wherein the inner surface forms a curved shape around the at least one speaker.

18. The apparatus of claim 17, wherein the curved shape is generally parabolic.

19. The apparatus of claim 14, further comprising:

an external sound cover, the external sound cover has an inner surface and an outer surface, the external sound cover is configured to attach to the eyewear device, wherein in operation, the audio signals emitted from the acoustic port reflect off of the inner surface toward the user's ear.

20. The apparatus of claim 19, wherein a first material used for the inner surface provides substantially for reflection of the audio signals and a second material used for the outer surface provides substantially for absorption of acoustic energy.

[Shape of external sound cover]

21. The apparatus of claim 19, wherein a shape of the external sound cover is concave towards the user's ear.

22. The apparatus of claim 14, wherein the chamber is located within a temple of the eyewear device.

23. The apparatus of claim 14, wherein the chamber is located within a temple insert module of the eyewear device.

24. The apparatus of claim 14, wherein an inner surface of the chamber has a first acoustic reflectivity and at least a portion of the eyewear device has a second acoustic reflectivity, the first acoustic reflectivity is greater than the second acoustic reflectivity.

25. The apparatus of claim 24, the portion absorbs vibrational energy.

26. The apparatus of claim 25, wherein the portion is forward of the chamber.

27. The apparatus of claim 25, wherein the portion is rear of the chamber.

28. The apparatus of claim 25, wherein the portion is an outer surface of the chamber.

29. An apparatus to provide audio signals to a user from a temple interlock, comprising:

a chamber, the chamber is defined by an interior surface, the chamber is contained within a volume of the temple interlock, the chamber further comprising:

at least one speaker, the at least one speaker to generate audio signals, the at least one speaker is contained within the volume; and

an acoustic port, the acoustic port is positioned in a wall of the chamber to concentrate emission of the audio signals from the chamber in a direction of the user's ear when the temple interlock is attached to the eyewear device and the user wears the eyewear device; and

an outer surface, the outer surface is exterior to the inner surface.

[Variable material properties in the eyewear device]

30. The apparatus of claim C1, wherein an inner surface of the chamber has a first acoustic reflectivity and at least a portion of the eyewear device has a second acoustic reflectivity, the first acoustic reflectivity is greater than the second acoustic reflectivity.

31. The apparatus of claim 30, the portion absorbs vibrational energy.

32. The apparatus of claim 31, wherein the portion is forward of the chamber.

33. The apparatus of claim 31, wherein the portion is rear of the chamber.

34. The apparatus of claim 31, wherein the portion is an outer surface of the chamber.

35. The apparatus of claim 29, wherein the inner surface forms a curved shape around the at least one speaker.

36. The apparatus of claim 35, wherein the curved shape is generally parabolic.

37. The apparatus of claim 29, further comprising:

an external sound cover, the external sound cover has an inner surface and an outer surface, the external sound cover is configured to attach to the eyewear device, wherein in operation, the audio signals emitted from the acoustic port reflect off of the inner surface toward the user's ear.

38. The apparatus of claim 37, wherein a first material used for the inner surface provides substantially for reflection of the audio signals and a second material used for the outer surface provides substantially for absorption of vibrational energy.

39. The apparatus of claim 37, wherein a shape of the external sound cover is concave towards the user's ear.

40. A method to provide audio signals to a user from a temple interlock, comprising;

generating audio signals within a chamber, the chamber is a part of a volume of the temple interlock;

concentrating the audio signals for delivery to the user's ear; and

transmitting the audio signals to the user's ear, the audio signals are transmitted through a port in the chamber.

41. The method of claims 40, wherein a shape of the chamber contributes to the concentrating.

42. The method of claim 41, wherein the shape provides a curved surface to a speaker, and the speaker is used in the generating.

43. The method of claim 41, wherein the shape is generally parabolic.

44. The method of claim 40, wherein an inner surface of the chamber has a first acoustic reflectivity and at least a portion of the temple interlock has a second acoustic reflectivity, the first acoustic reflectivity is greater than the second acoustic reflectivity.

45. The method of claim 44, the portion absorbs vibrational energy.

46. The method of claim 45, wherein the portion is an outer surface of the chamber.

47. The method of claim 40, wherein an external sound cover contributes to the concentrating, the external sound cover is attached to the temple interlock.

48. An apparatus to increase a signal-to-noise ratio of audio signals directed towards a user's ear, comprising:

an external sound cover, the external sound cover further comprising:

an inner surface; and

an outer surface, the external sound cover is configured for attachment to a temple of an eyewear device, wherein in operation, audio signals emitted from an acoustic port of an eyewear device reflect off of the inner surface and are directed thereby toward the user's ear.

49. The apparatus of claim 48, wherein a material property of the outer surface is selected to provide absorption of acoustic energy incident thereon, thereby increasing a signal-to-noise ratio of the audio signals.

50. The apparatus of claim 48, wherein a material property of the outer surface is selected to reflect acoustic energy incident thereon away from the user, thereby increasing a signal-to-noise ratio of the audio signals.

51. The apparatus of claim 48, wherein in operation the external sound cover prevents windborne turbulence from impinging on the user's ear, thereby increasing a signal-to-noise ratio of the audio signals.

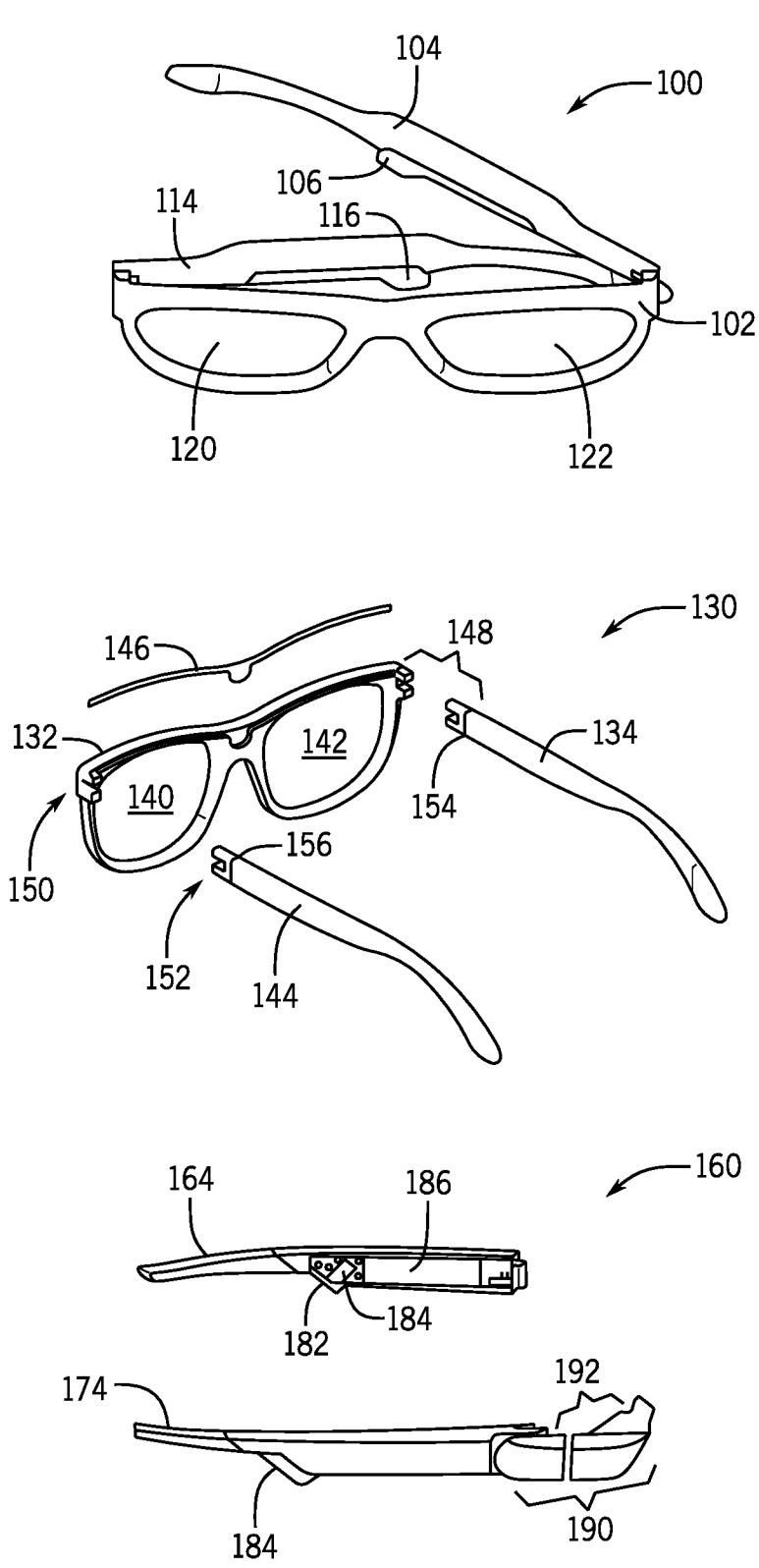
104
100
106
114
116
102
120
122
130
146
148
132
142
134
140
154
156
150
152
144
160
164
186
184
182
174
192
184
190

FIG. 1

FIG. 2

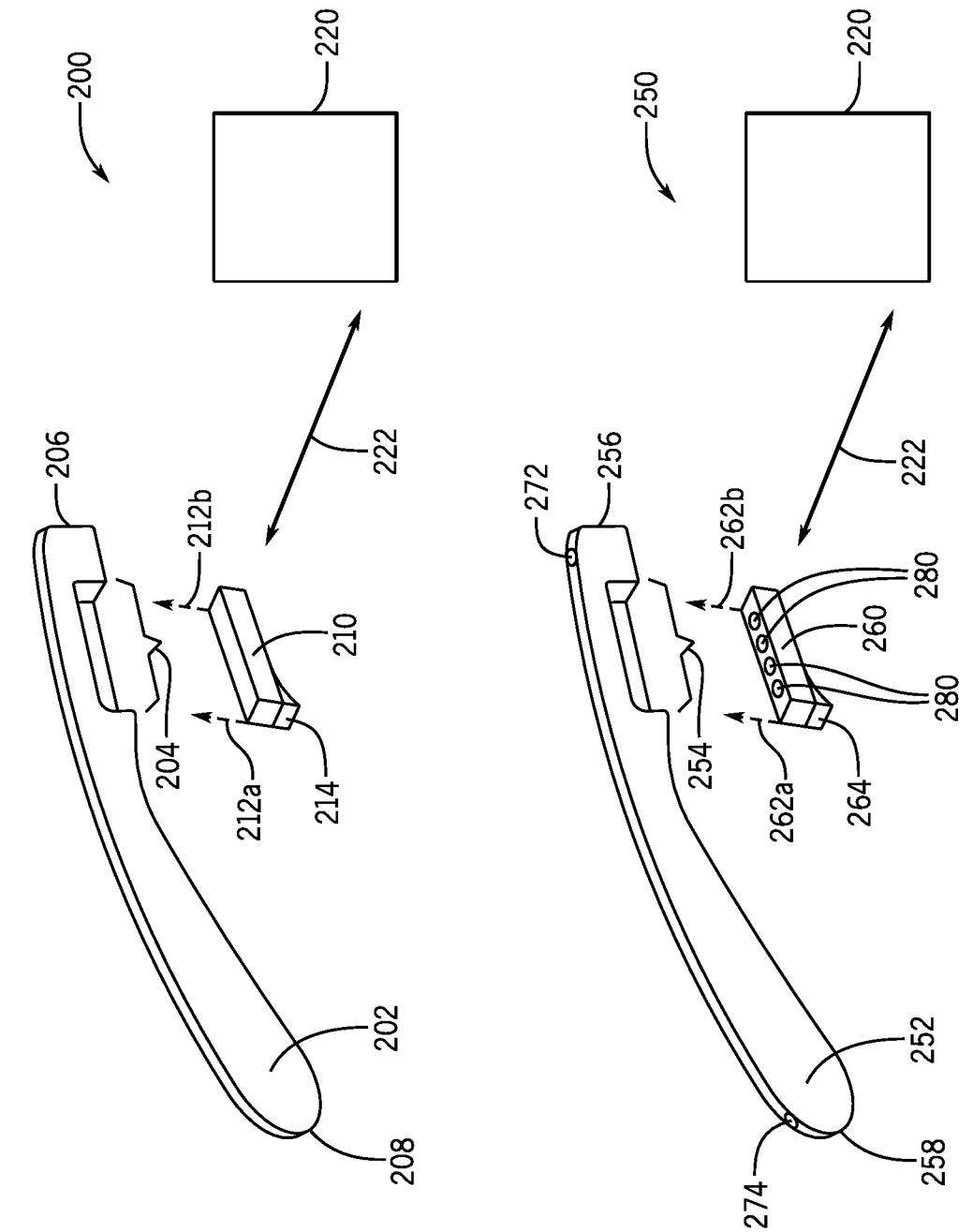
200
220
206
212b
210
204
212a
214
222
202
208
250
220
272
256
262b
280
260
280
254
262a
264
222
252
258
274

FIG. 3

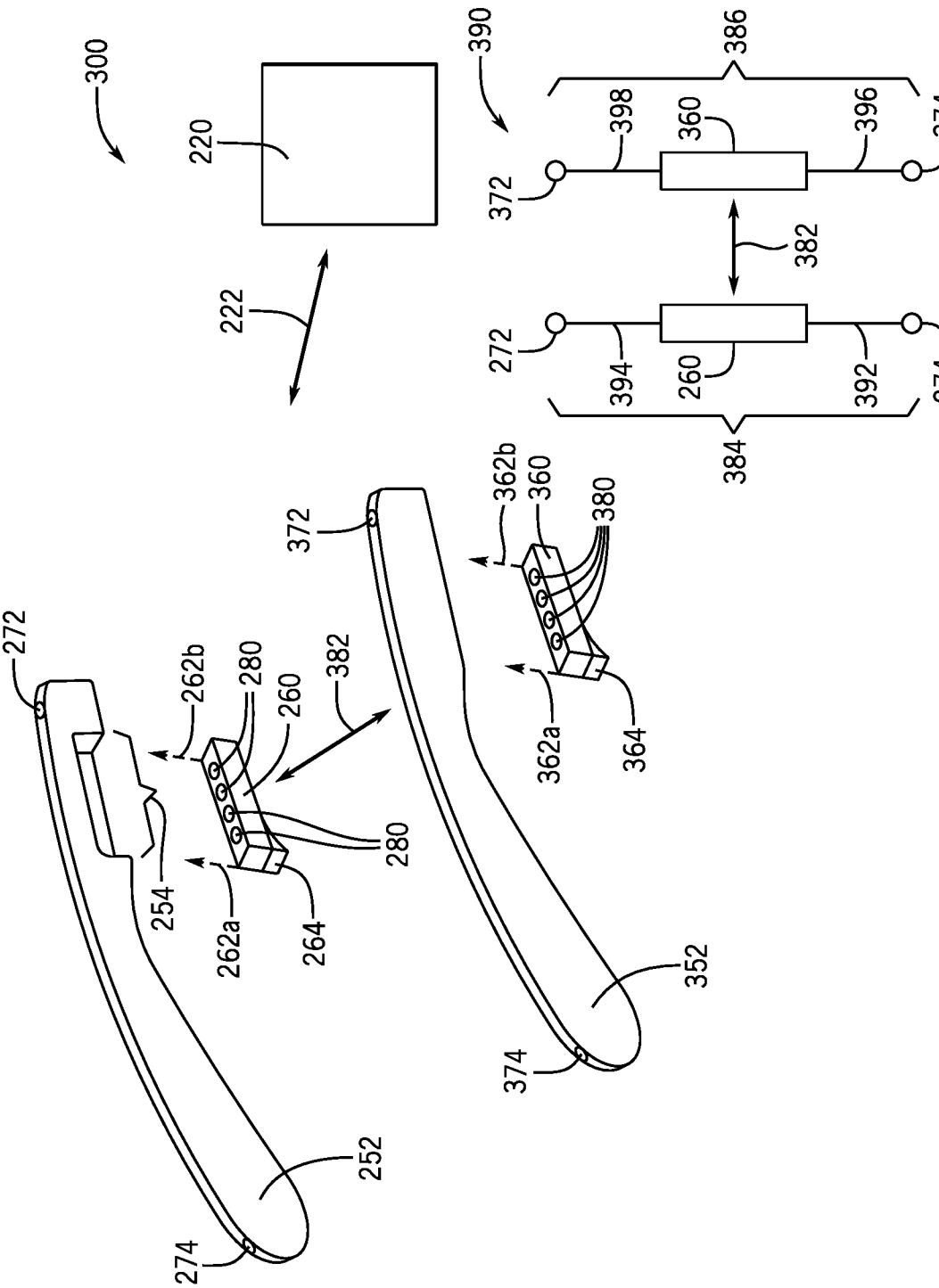
300
220
222
390
386
398
360
396
374
372
382
272
394
260
392
274
384
362b
360
380
372
272
262b
280
260
382
362a
364
254
262a
264
280
352
374
252
274

FIG. 4

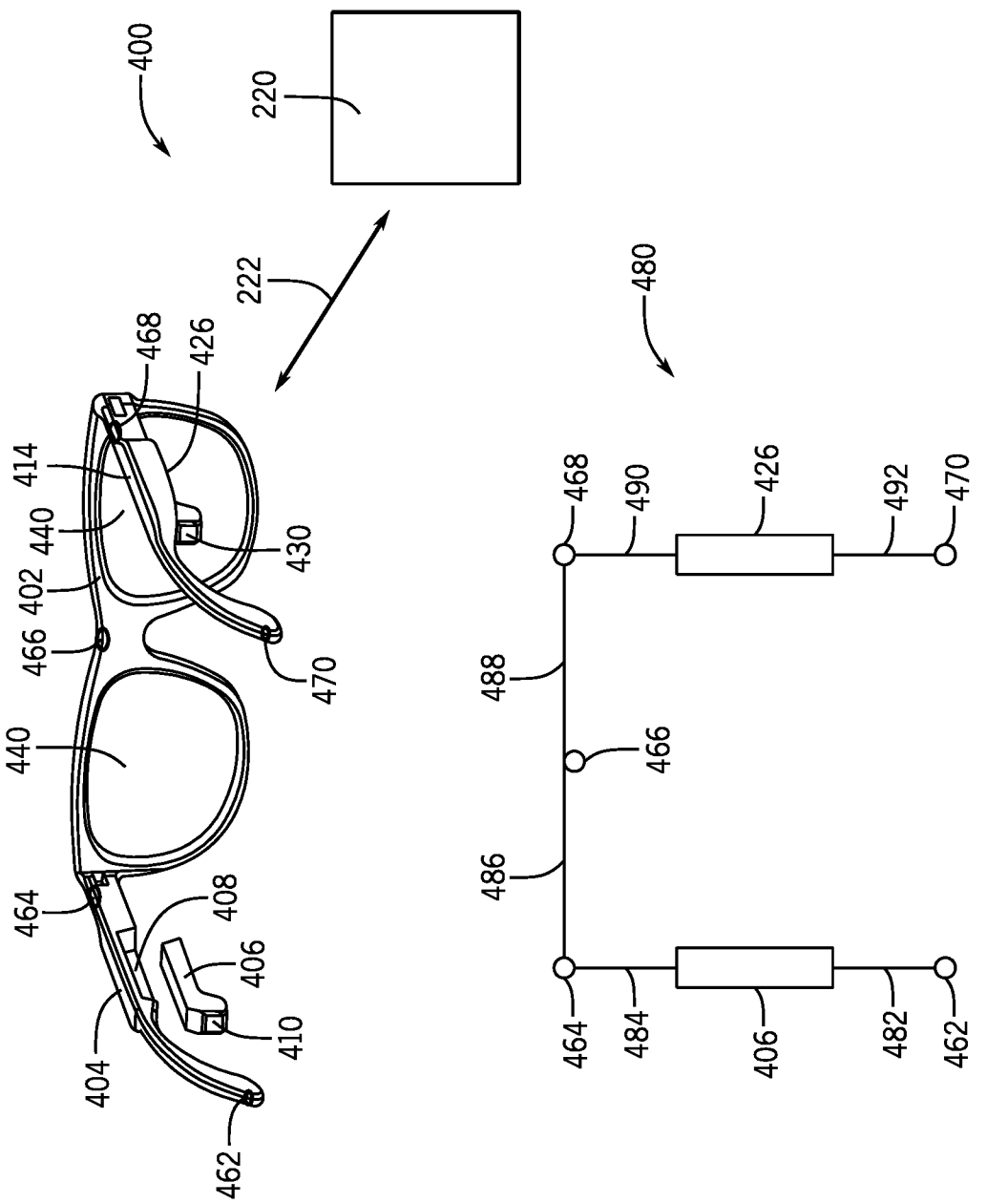
400
220
222
480
468
426
414
440
402
466
430
470
440
464
408
406
410
404
462
468
490
426
492
470
488
466
486
464
484
406
482
462

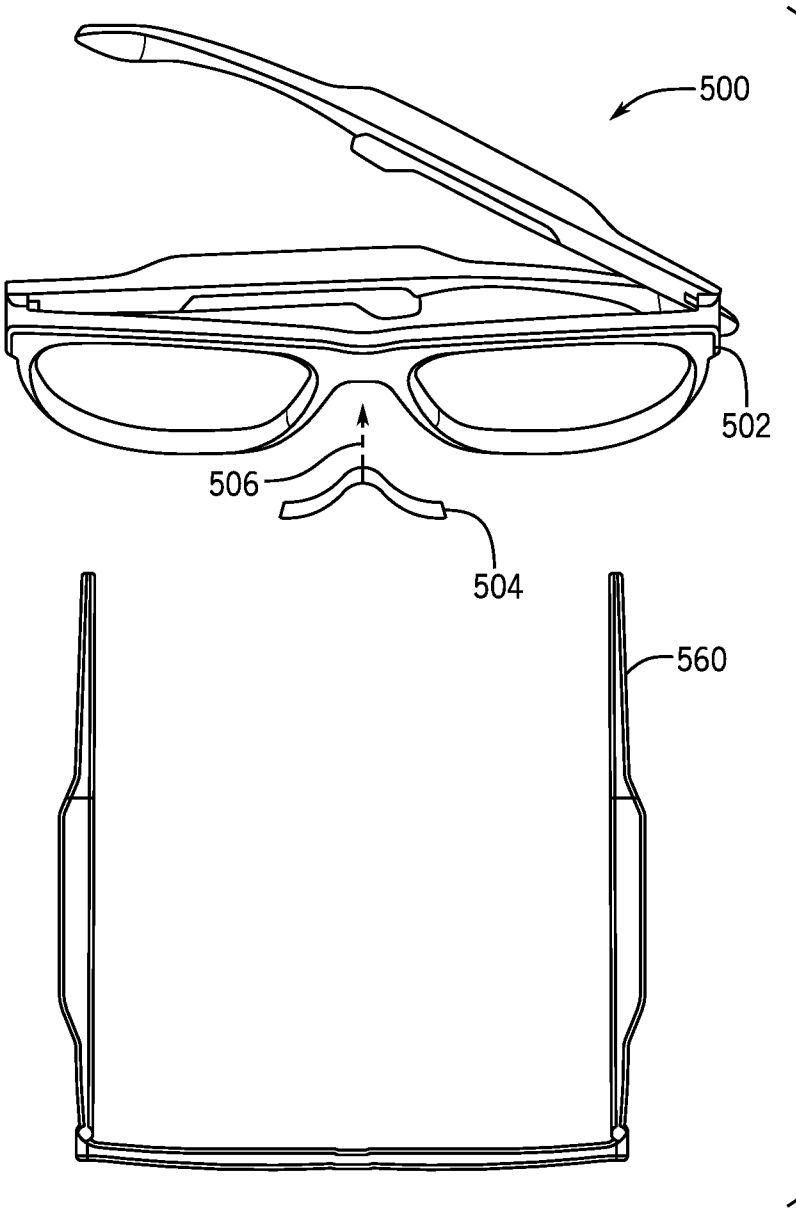

FIG. 5

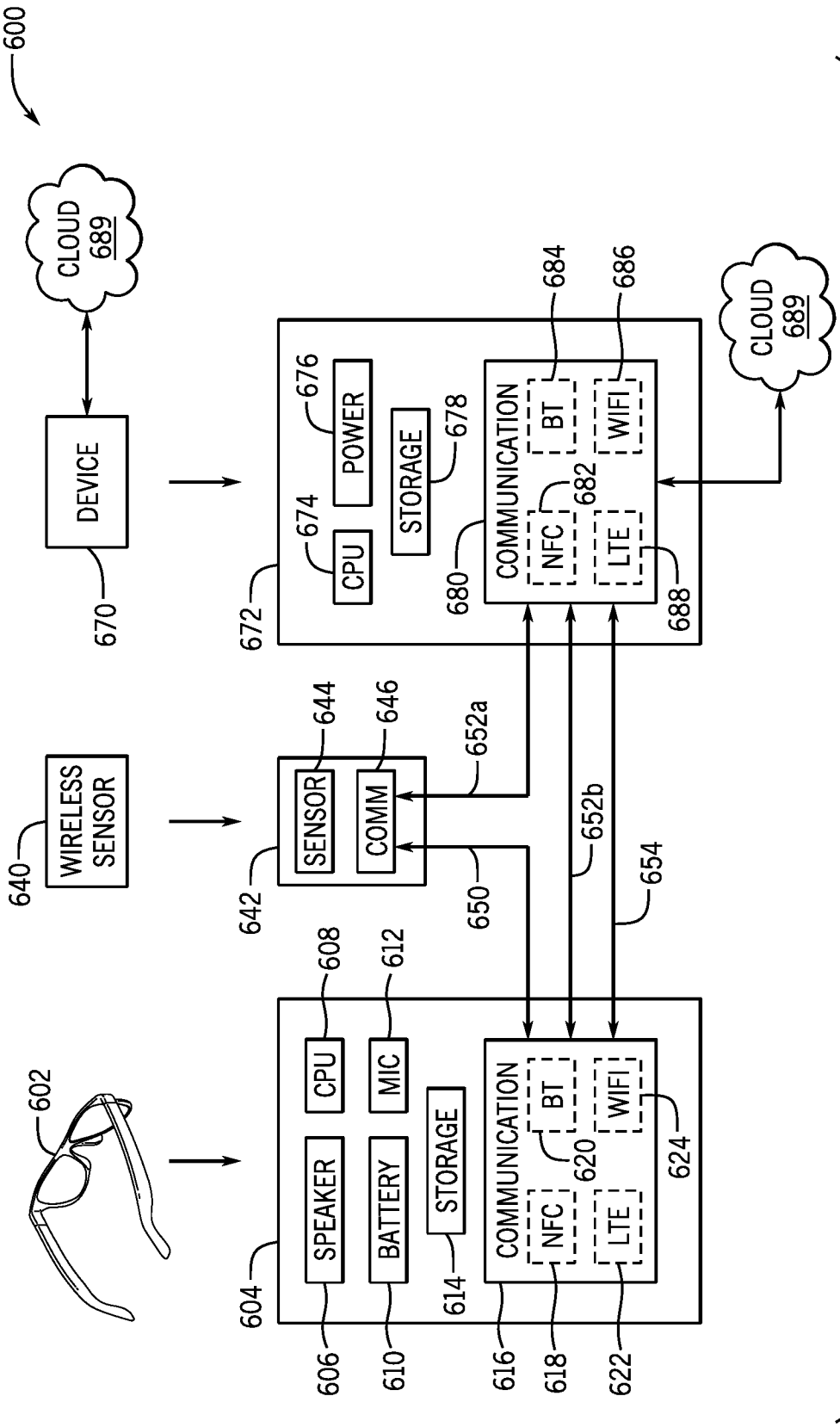
600
CLOUD 689
DEVICE
670
672
CPU
674
POWER
676
STORAGE
678
COMMUNICATION
680
NFC
682
BT
684
WIFI
686
LTE
688
CLOUD 689
640
WIRELESS SENSOR
642
SENSOR
644
COMM
646
652a
650
652b
654
602
604
SPEAKER
606
BATTERY
610
CPU
608
MIC
612
STORAGE
614
COMMUNICATION
616
NFC
618
BT
620
WIFI
622
LTE
624

FIG. 6A

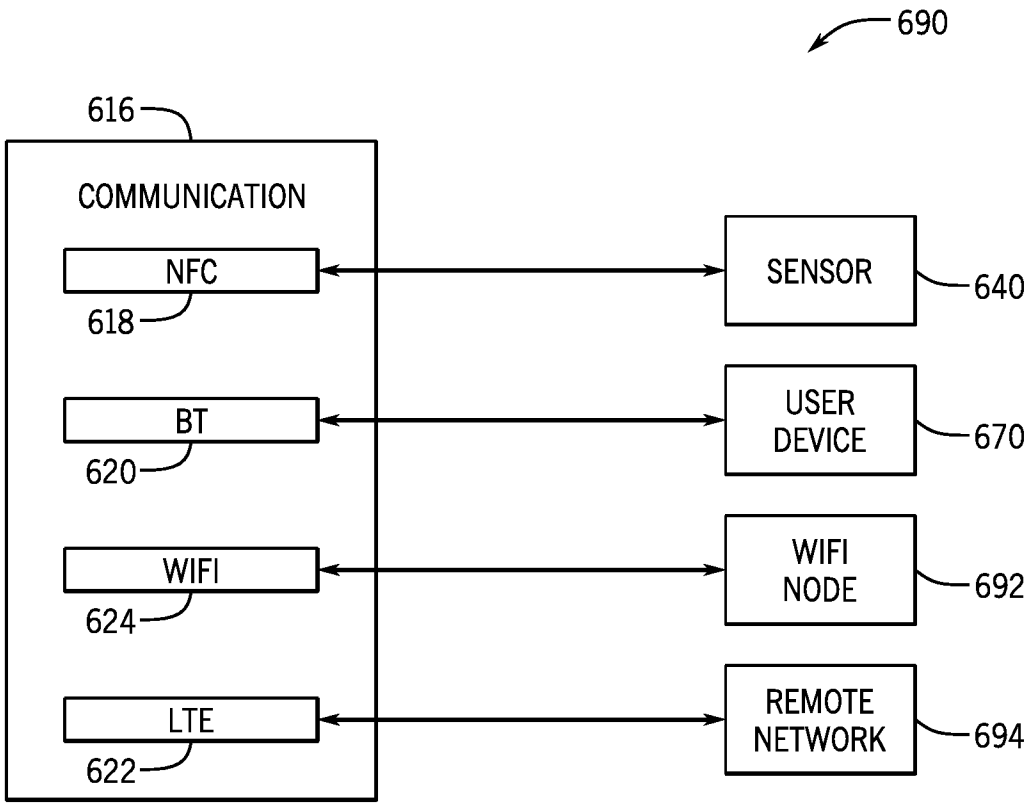
690
616
COMMUNICATION
NFC
618
BT
620
WIFI
624
LTE
622
SENSOR
640
USER DEVICE
670
WIFI NODE
692
REMOTE NETWORK
694

FIG. 6B

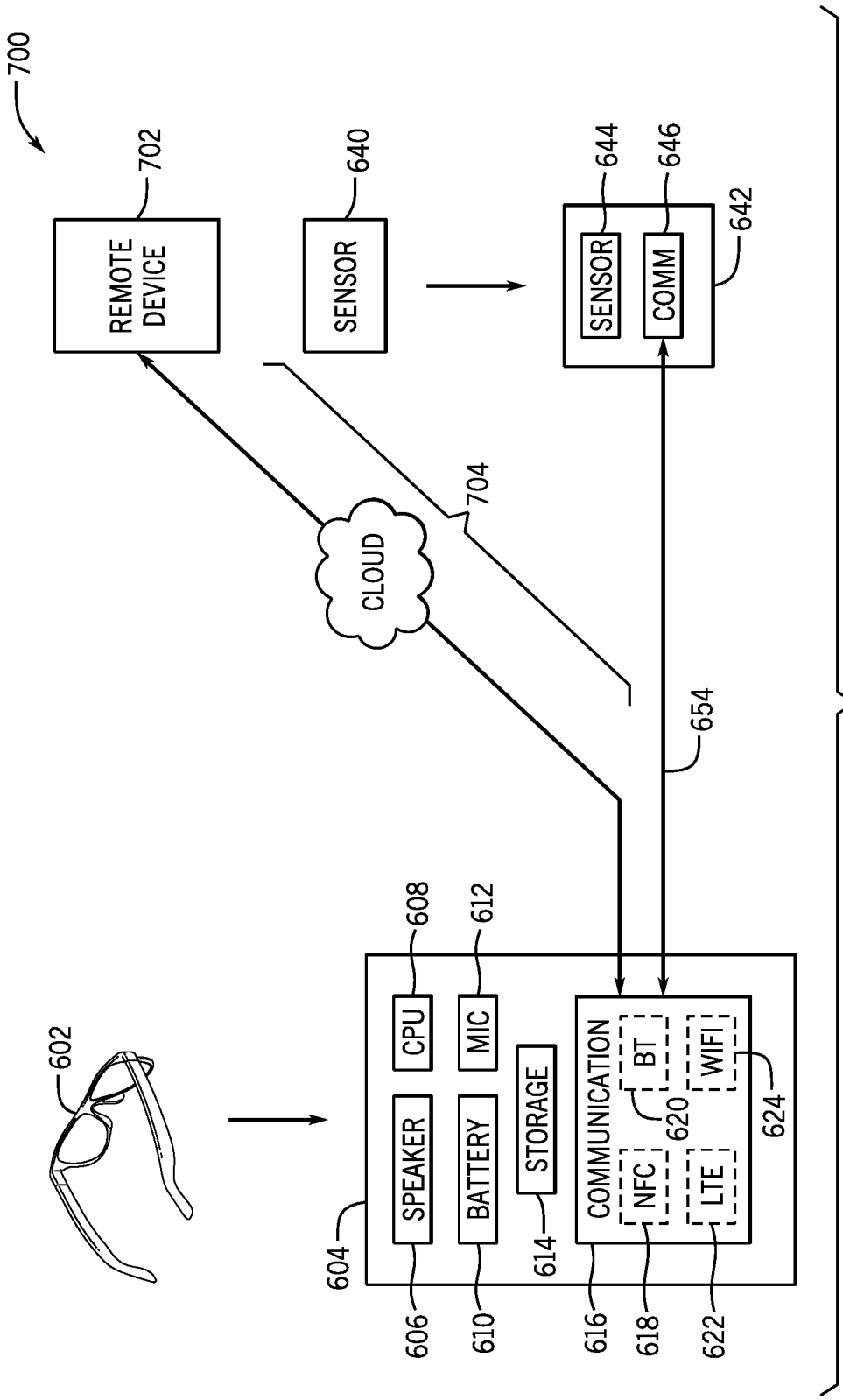
700
REMOTE DEVICE
702
SENSOR
640
SENSOR
644
COMM
646
642
CLOUD
704
654
602
CPU
608
MIC
612
SPEAKER
BATTERY
STORAGE
COMMUNICATION
BT
NFC
620
WIFI
LTE
624
604
606
610
614
616
618
622

FIG. 7

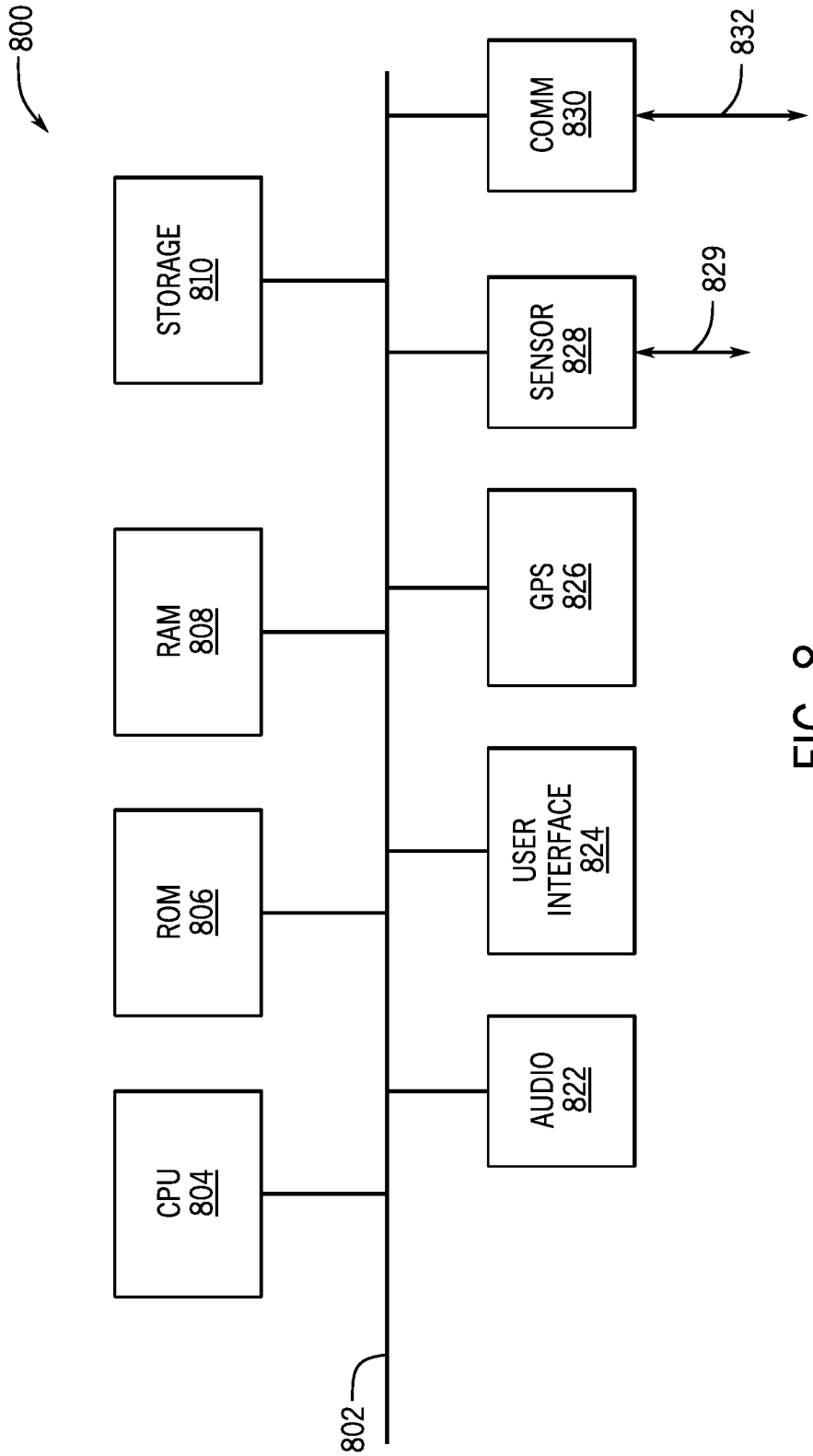
800
832
COMM 830
STORAGE 810
829
SENSOR 828
RAM 808
GPS 826
ROM 806
USER INTERFACE 824
AUDIO 822
CPU 804
802

FIG. 8

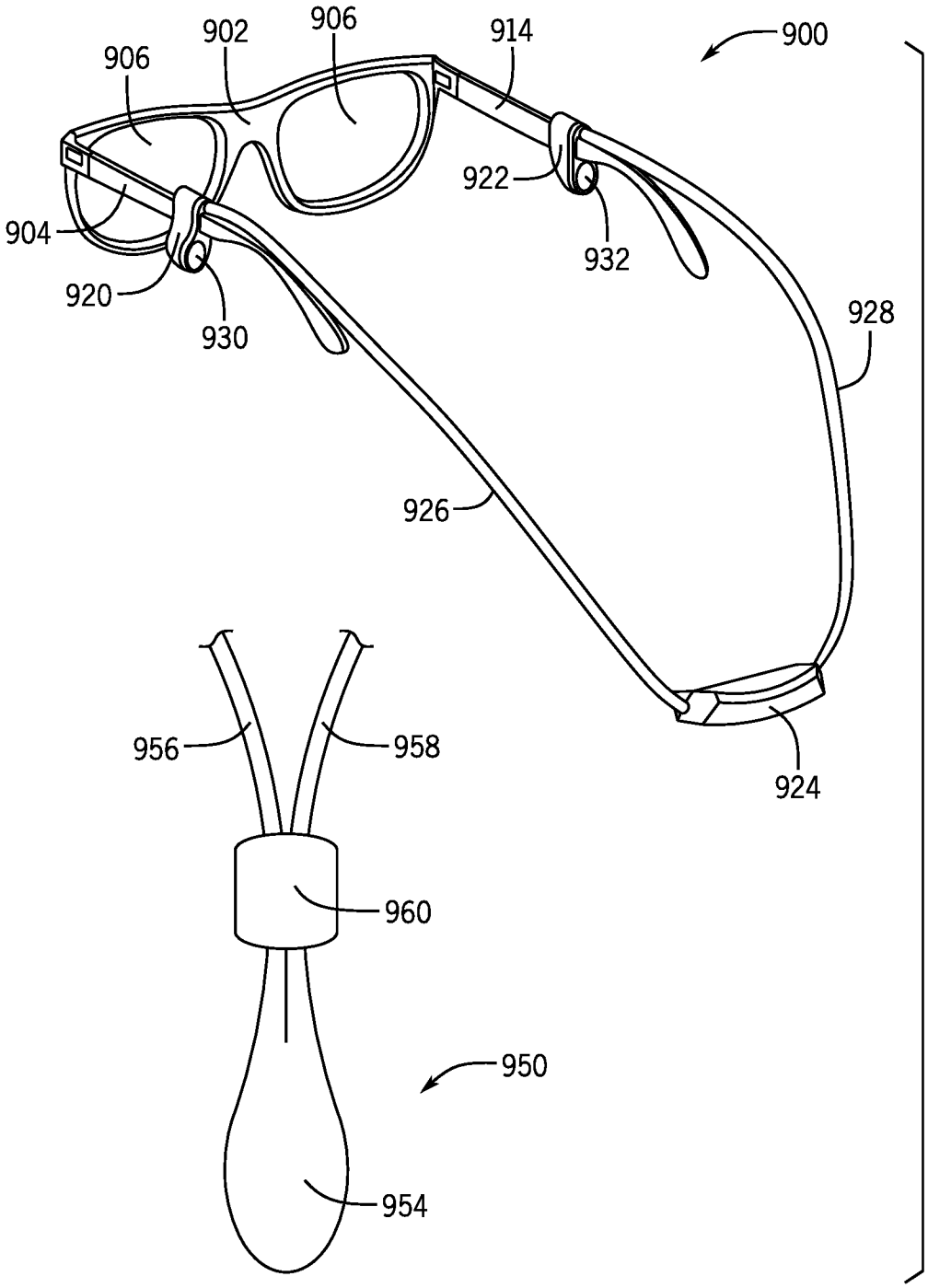
900
902
906
906
914
922
932
904
920
930
928
926
924
956
958
960
950
954

FIG. 9

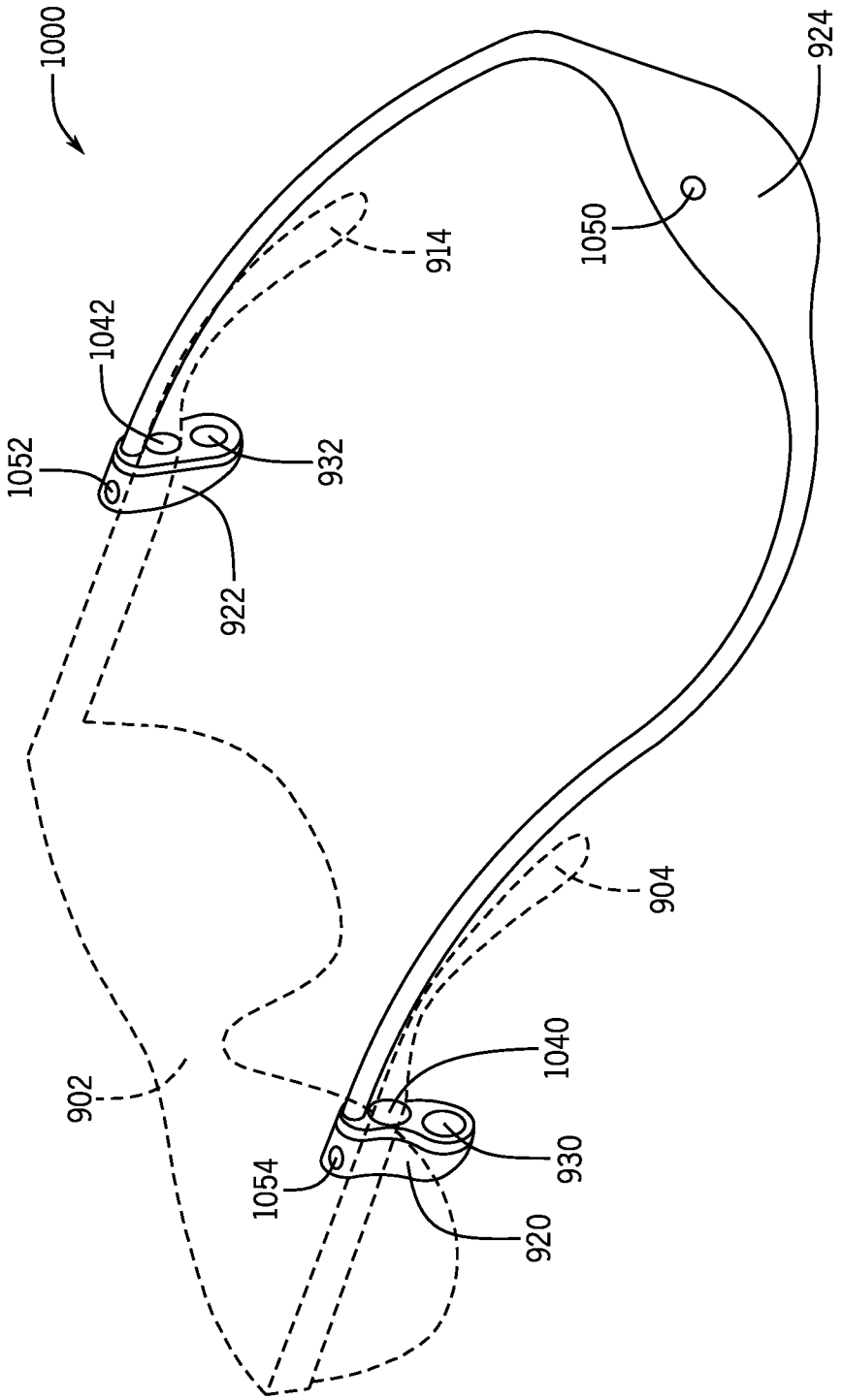

FIG. 10

FIG. 11

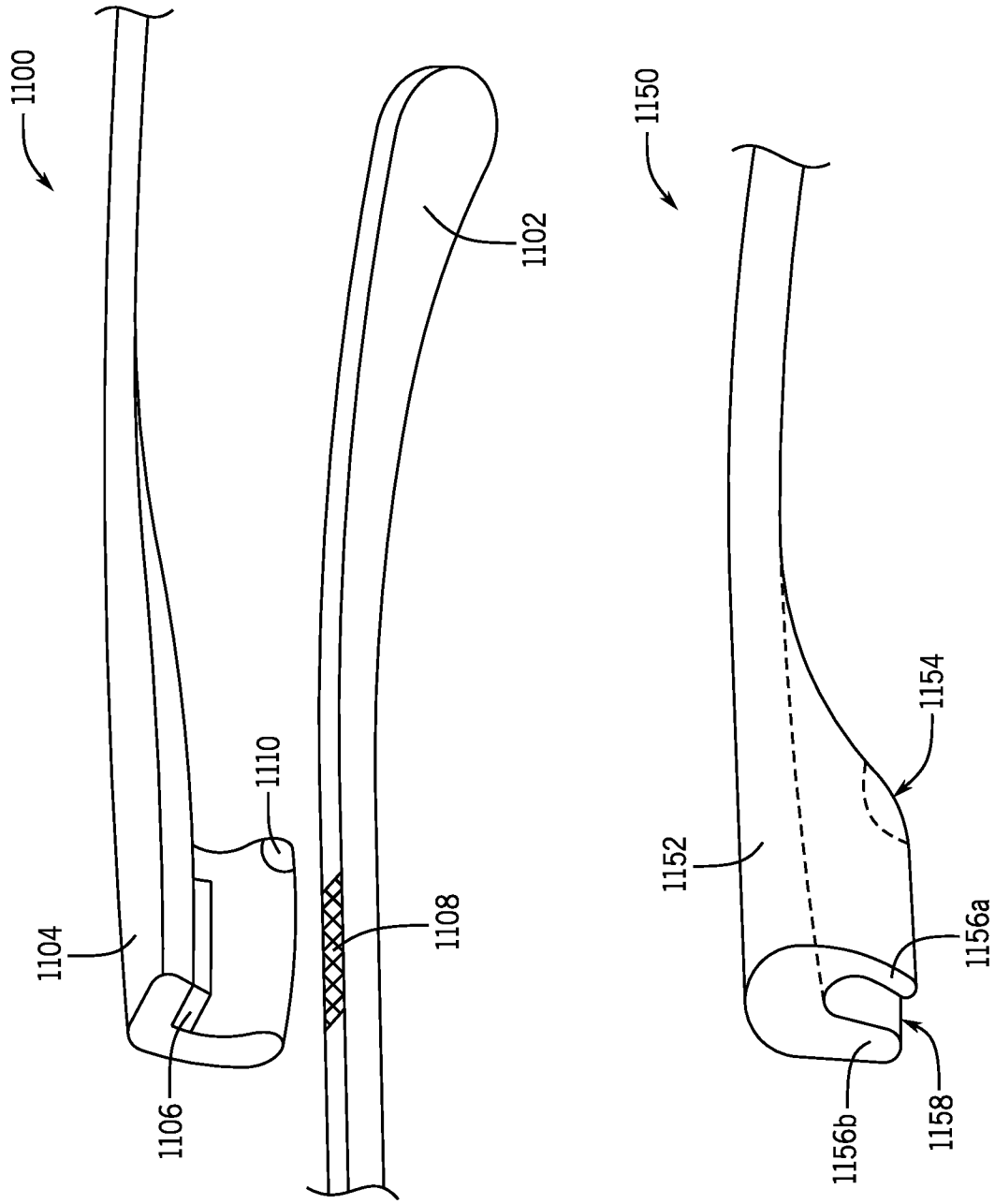
1100
1102
1104
1106
1108
1110
1150
1152
1154
1156a
1156b
1158

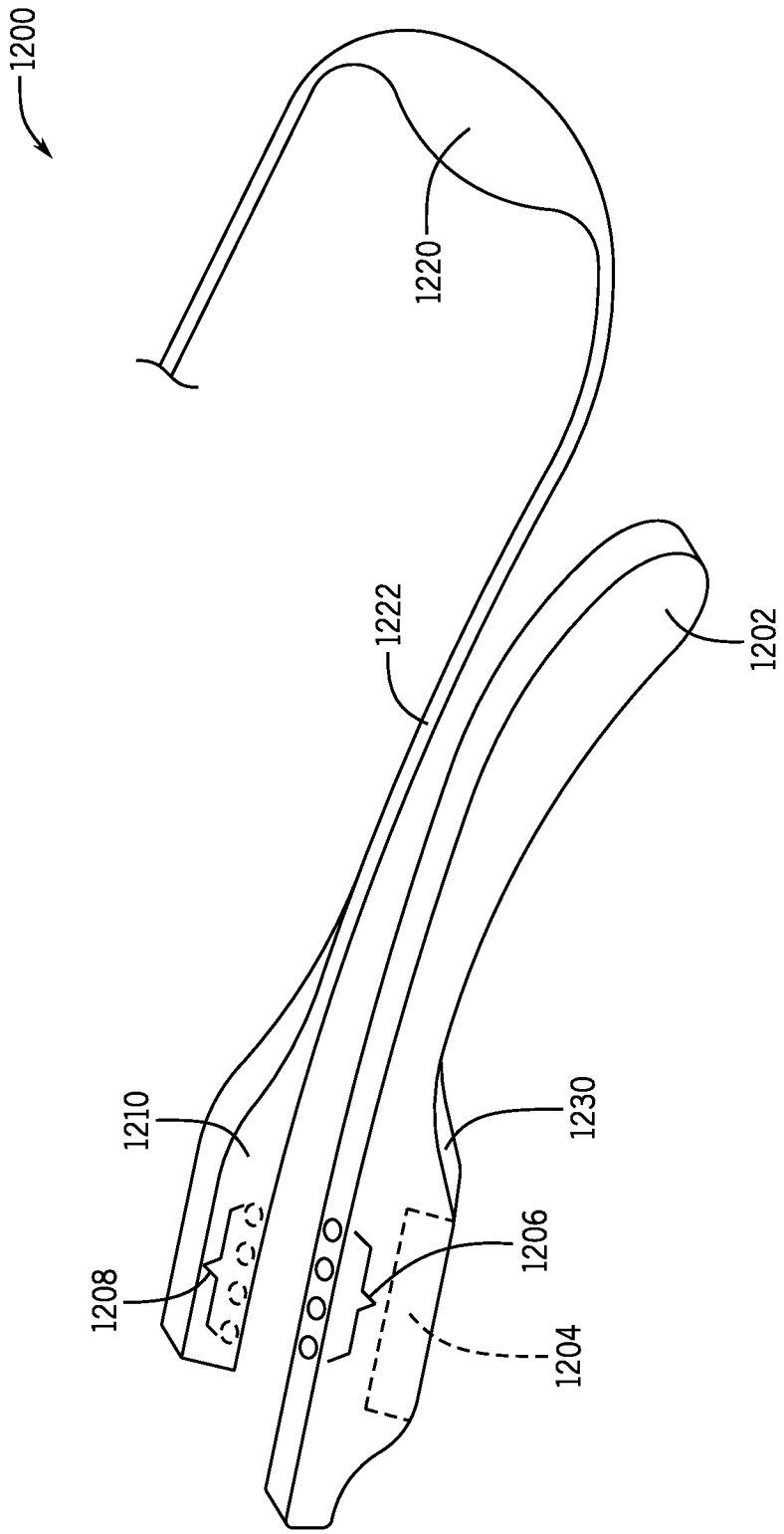

FIG. 12

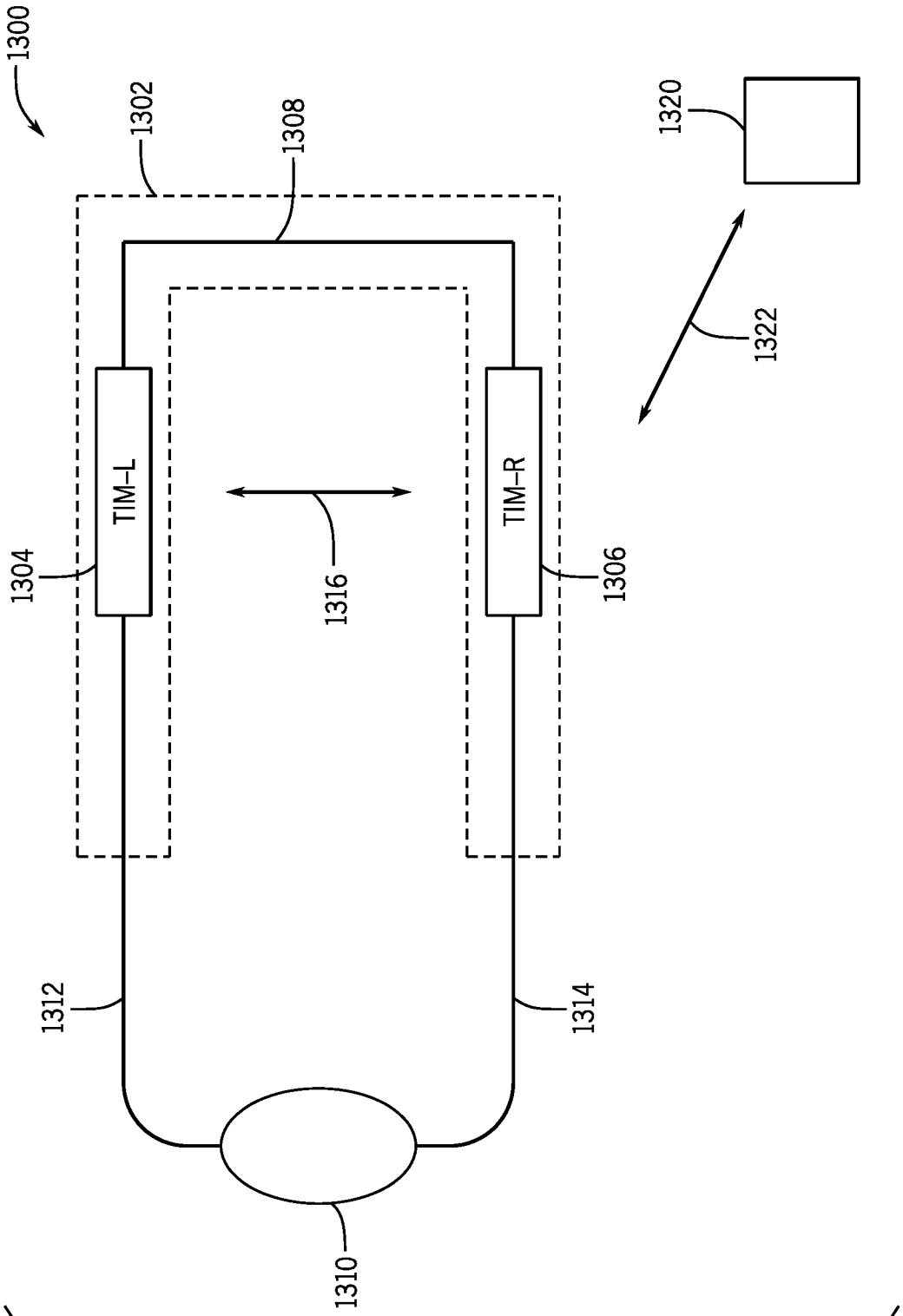
1300
1302
1308
1320
1322
TIM-L
TIM-R
1304
1306
1316
1312
1314
1310

FIG. 13

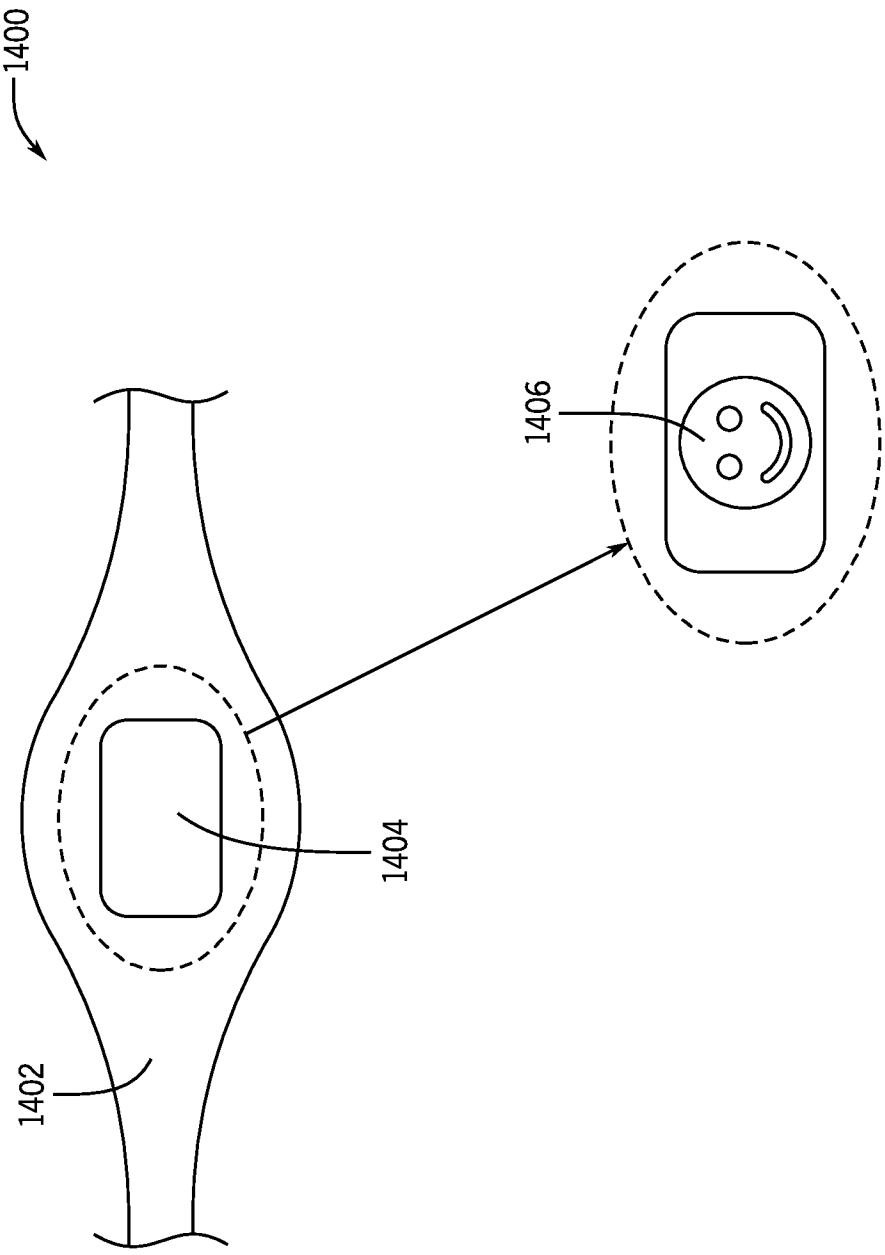

FIG. 14

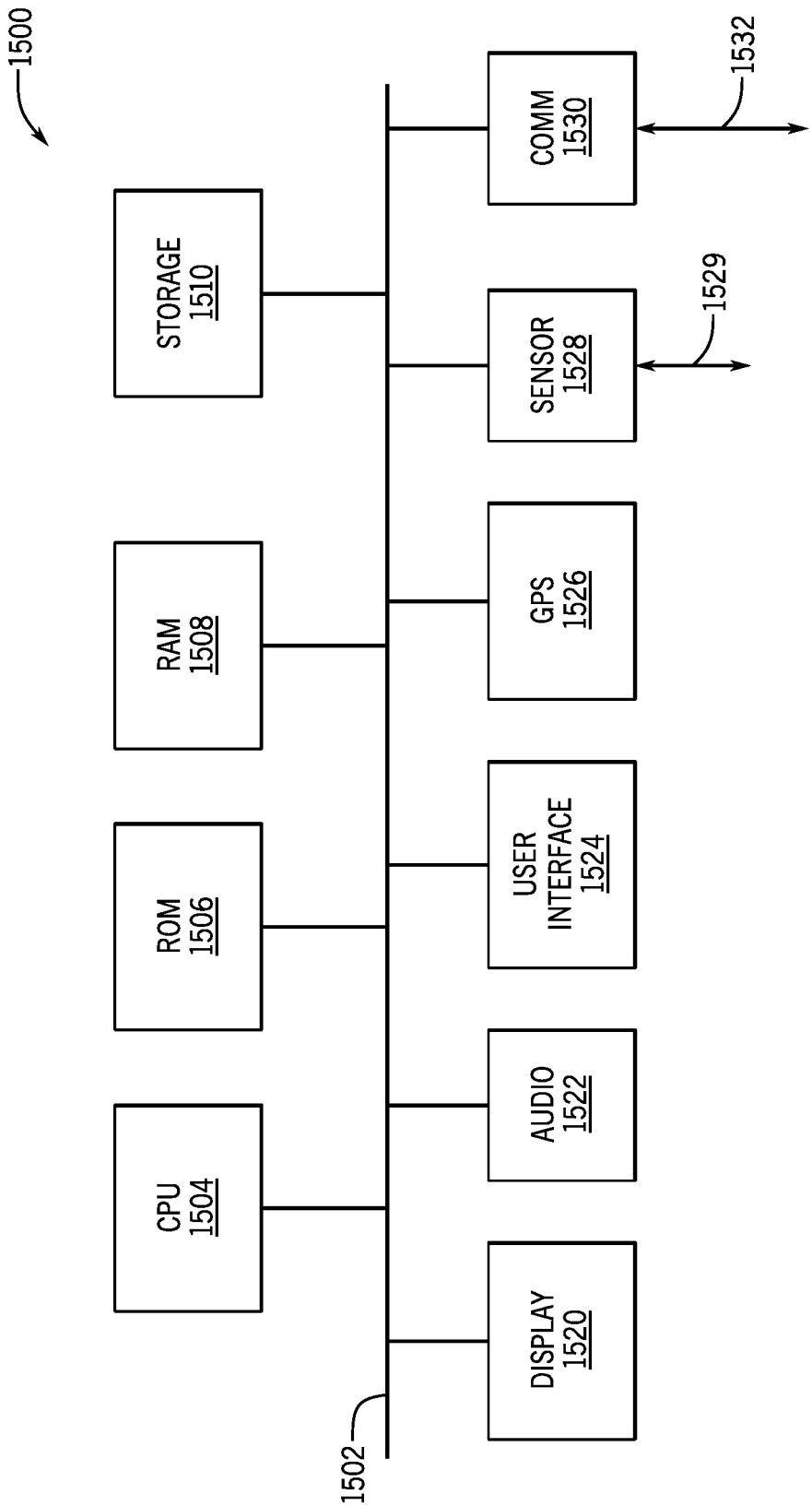
1500
STORAGE 1510
RAM 1508
ROM 1506
CPU 1504
DISPLAY 1520
AUDIO 1522
USER INTERFACE 1524
GPS 1526
SENSOR 1528
1529
COMM 1530
1532
1502

FIG. 15

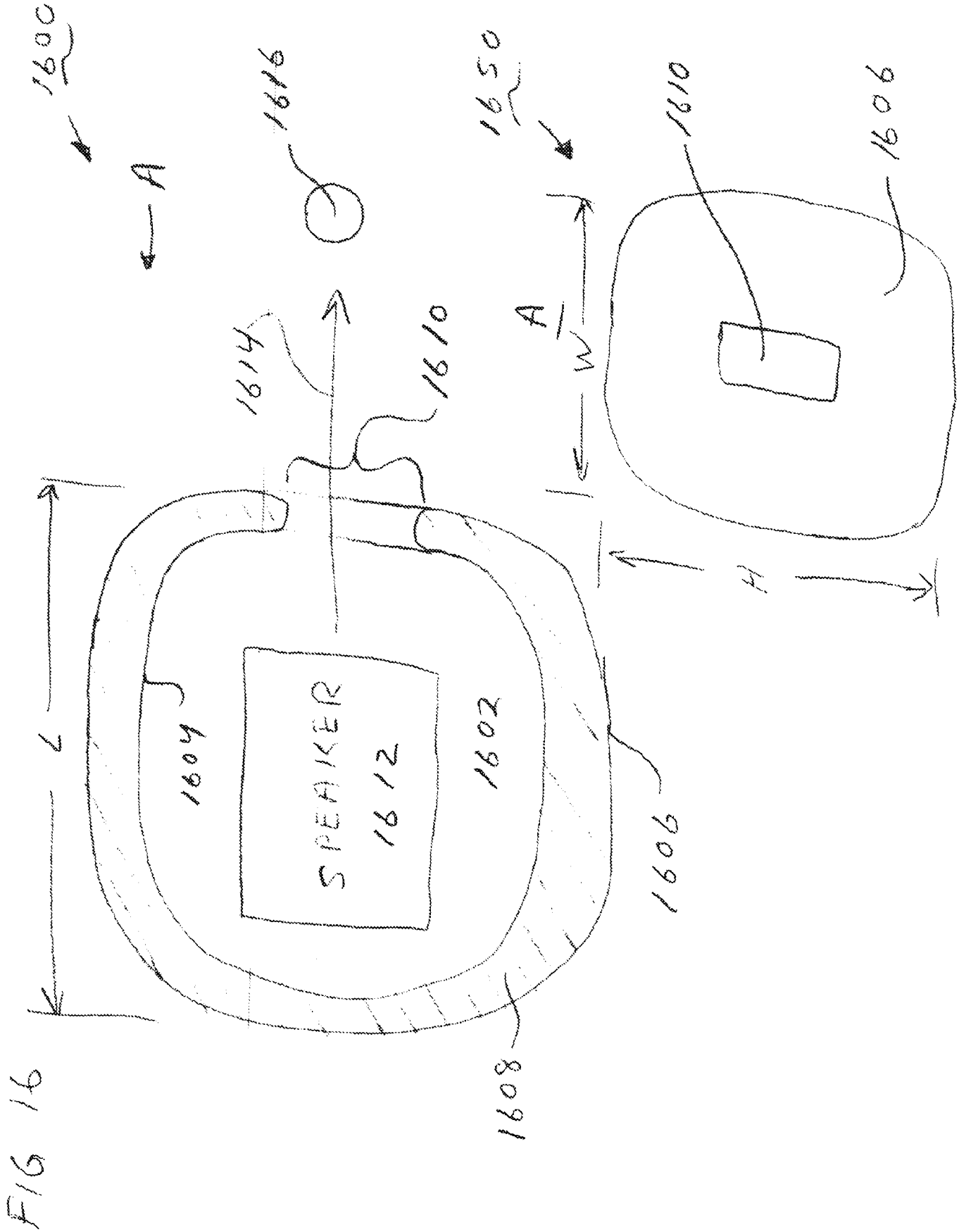
1600
A
1616
1650
1610
1606
A
W
1614
1610
L
SPEAKER
1612
1604
1602
1606
H
1608

FIG 16

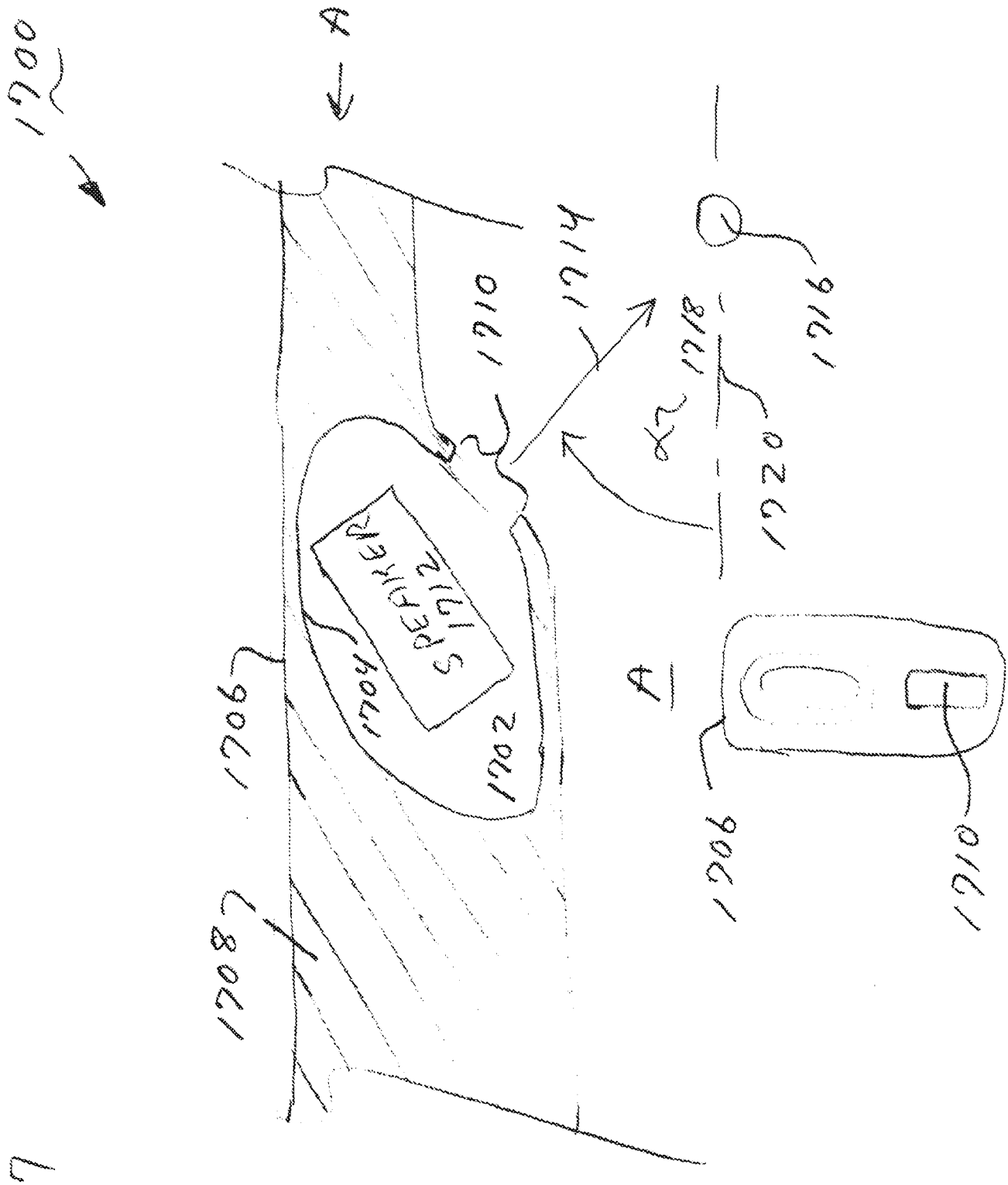
1700
A
1714
1710
1718
1716
1720
SPEAKER
1712
1704
1702
1706
1708
A
1706
1710

FIG 17

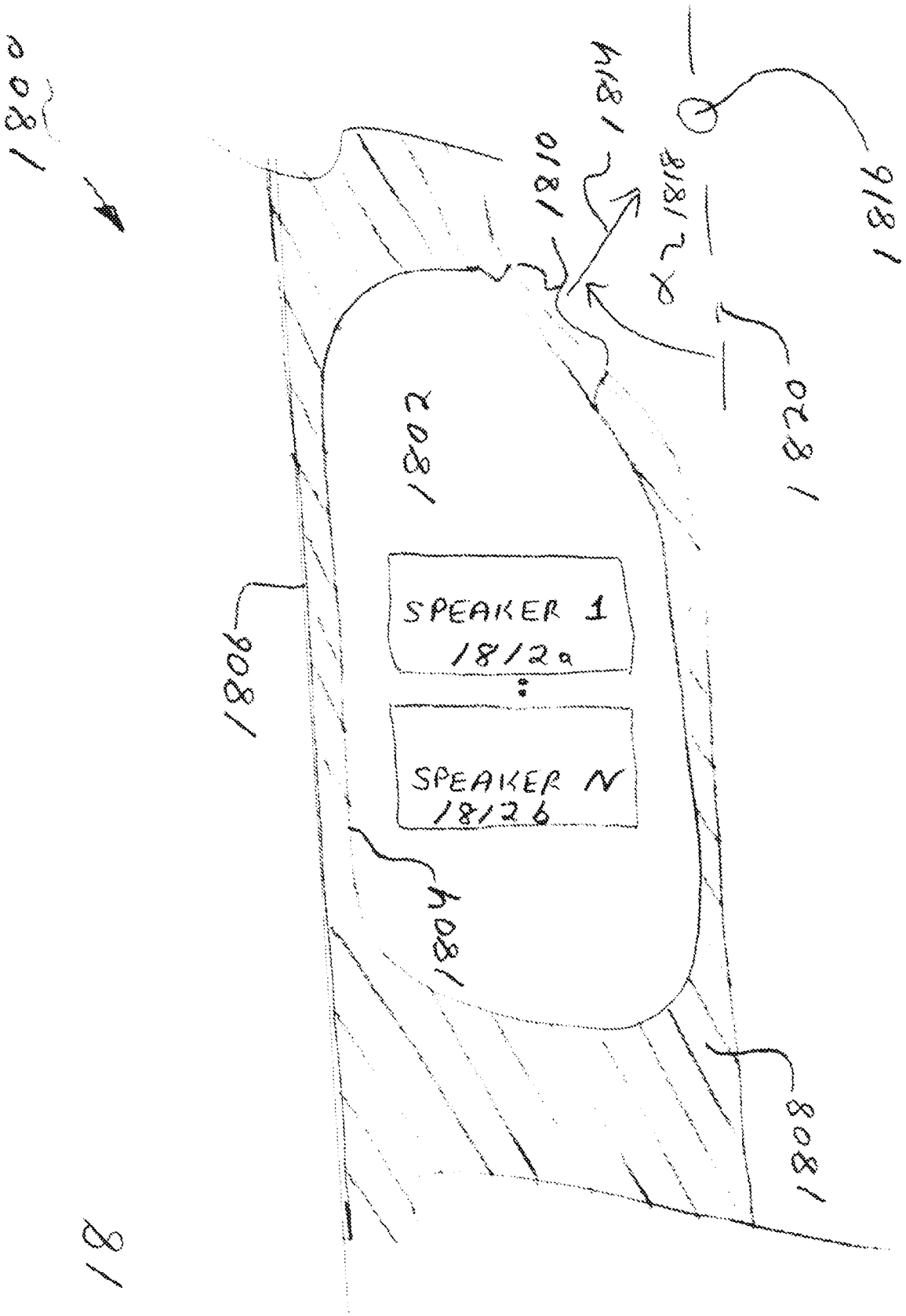
1800
1810
1814
1818
1816
1820
1802
1806
SPEAKER 1
1812a
SPEAKER N
1812b
1804
1808

FIG 18

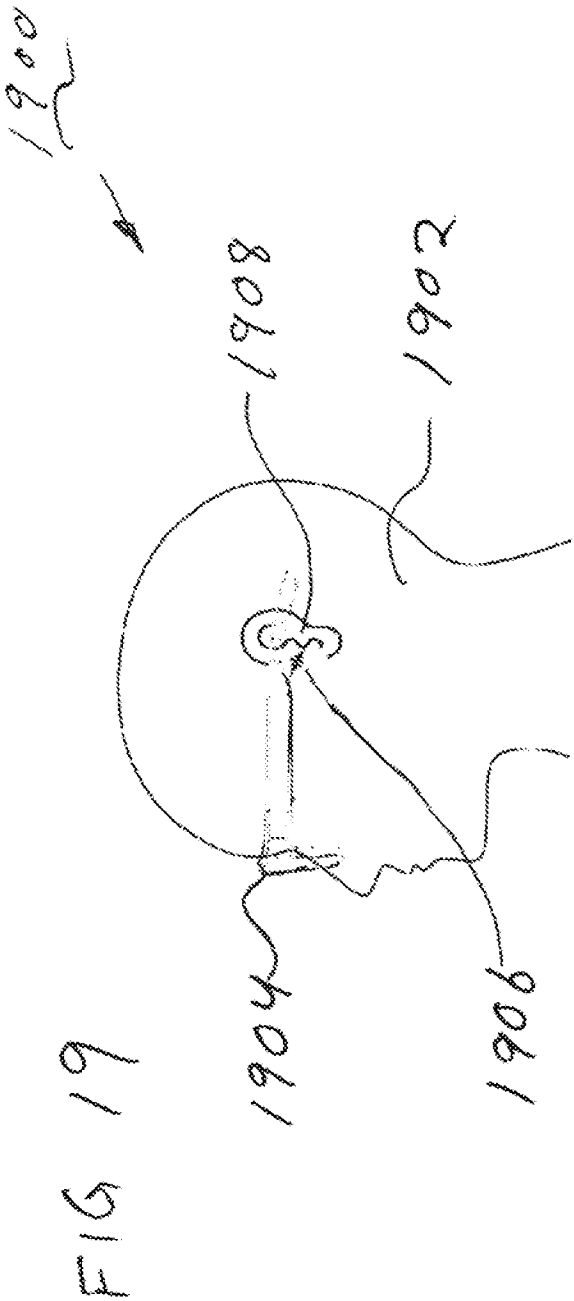

FIG 19

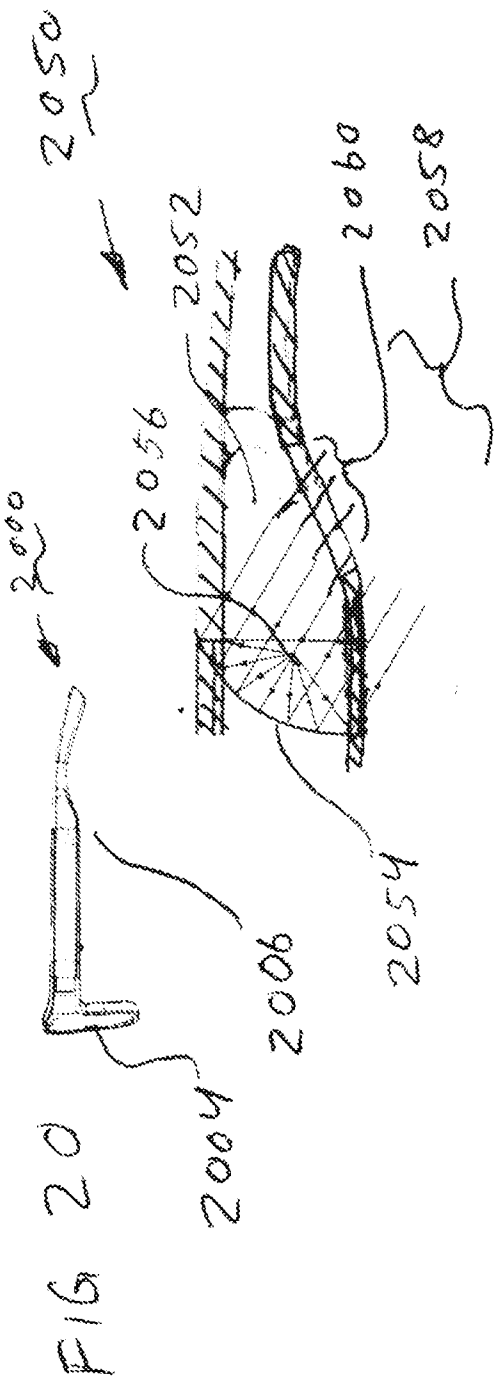

FIG 20

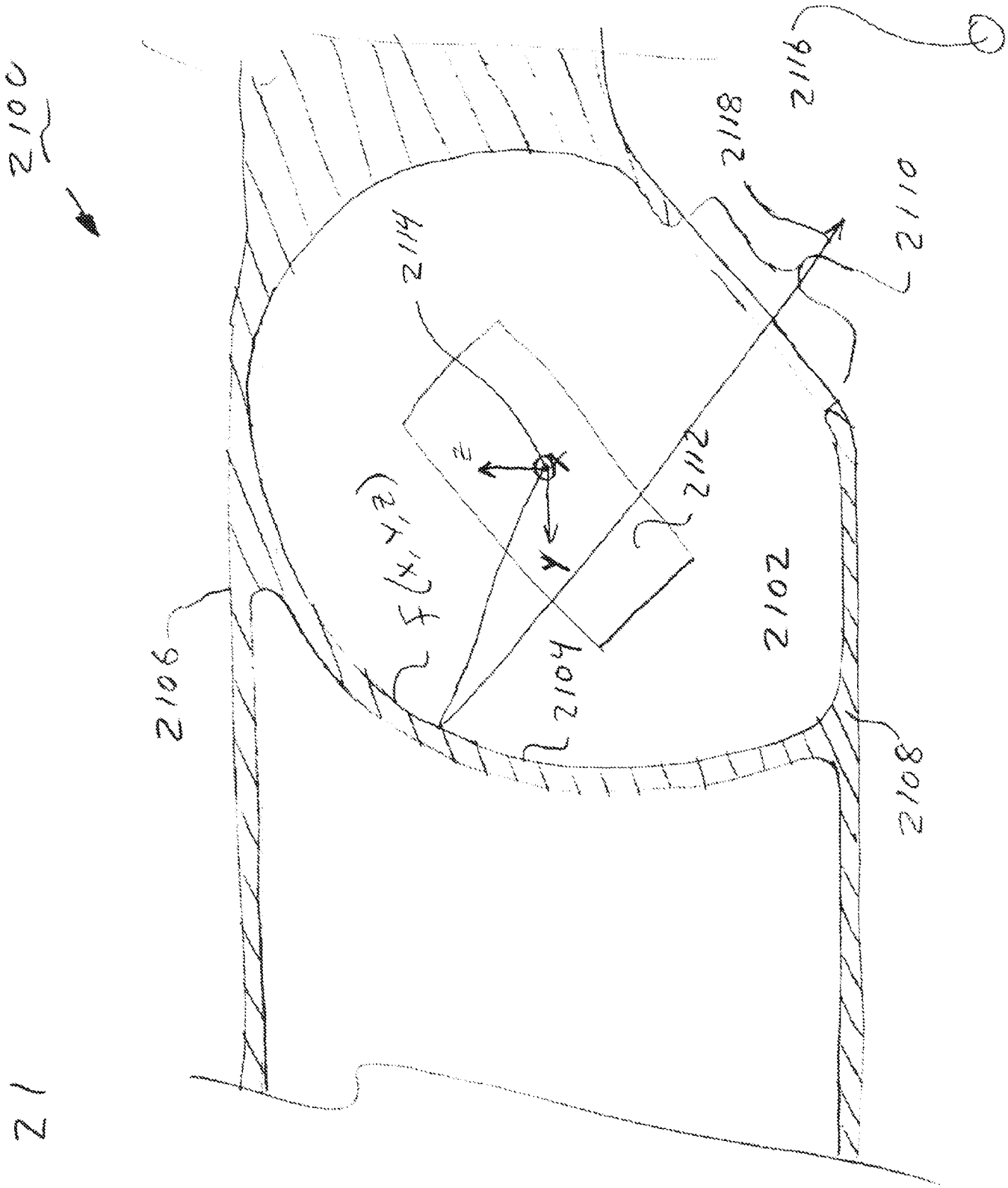

FIG 21

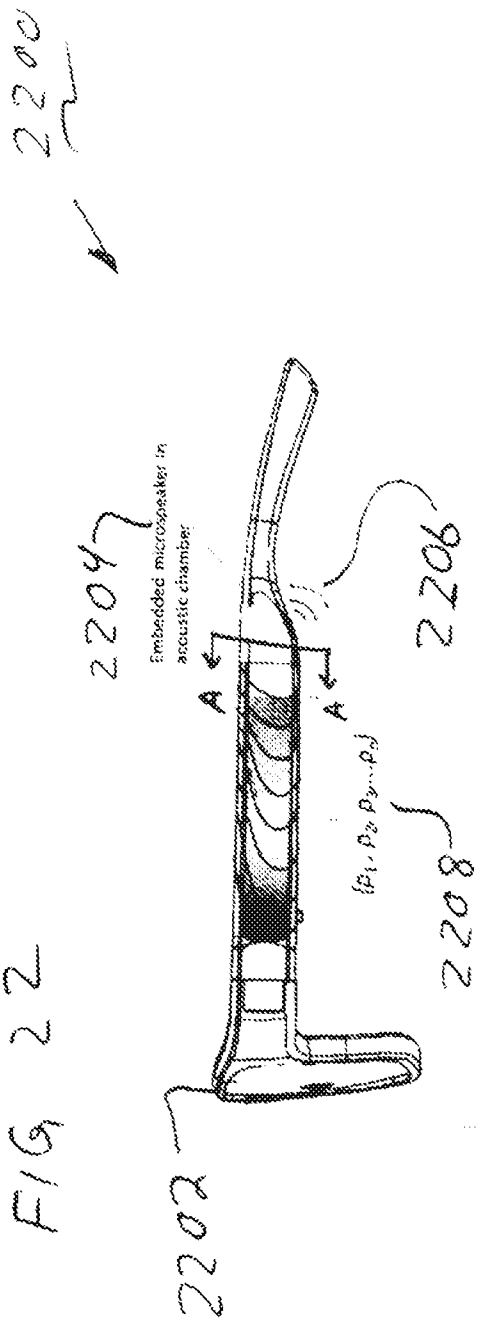
2200
2204
Embedded microspeaker in acoustic chamber
2206
A
A
2208
2202

FIG 22

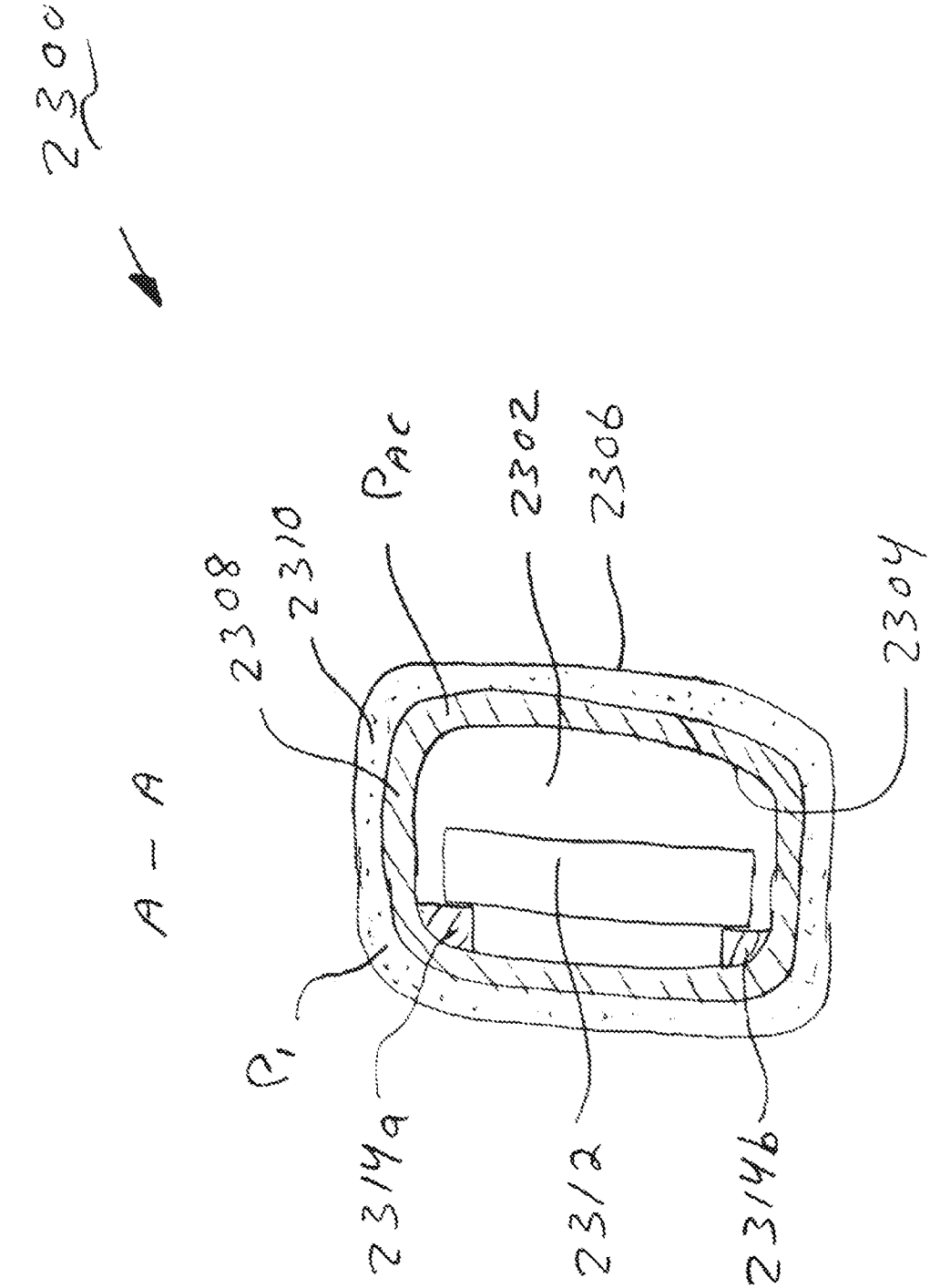

FIG 23

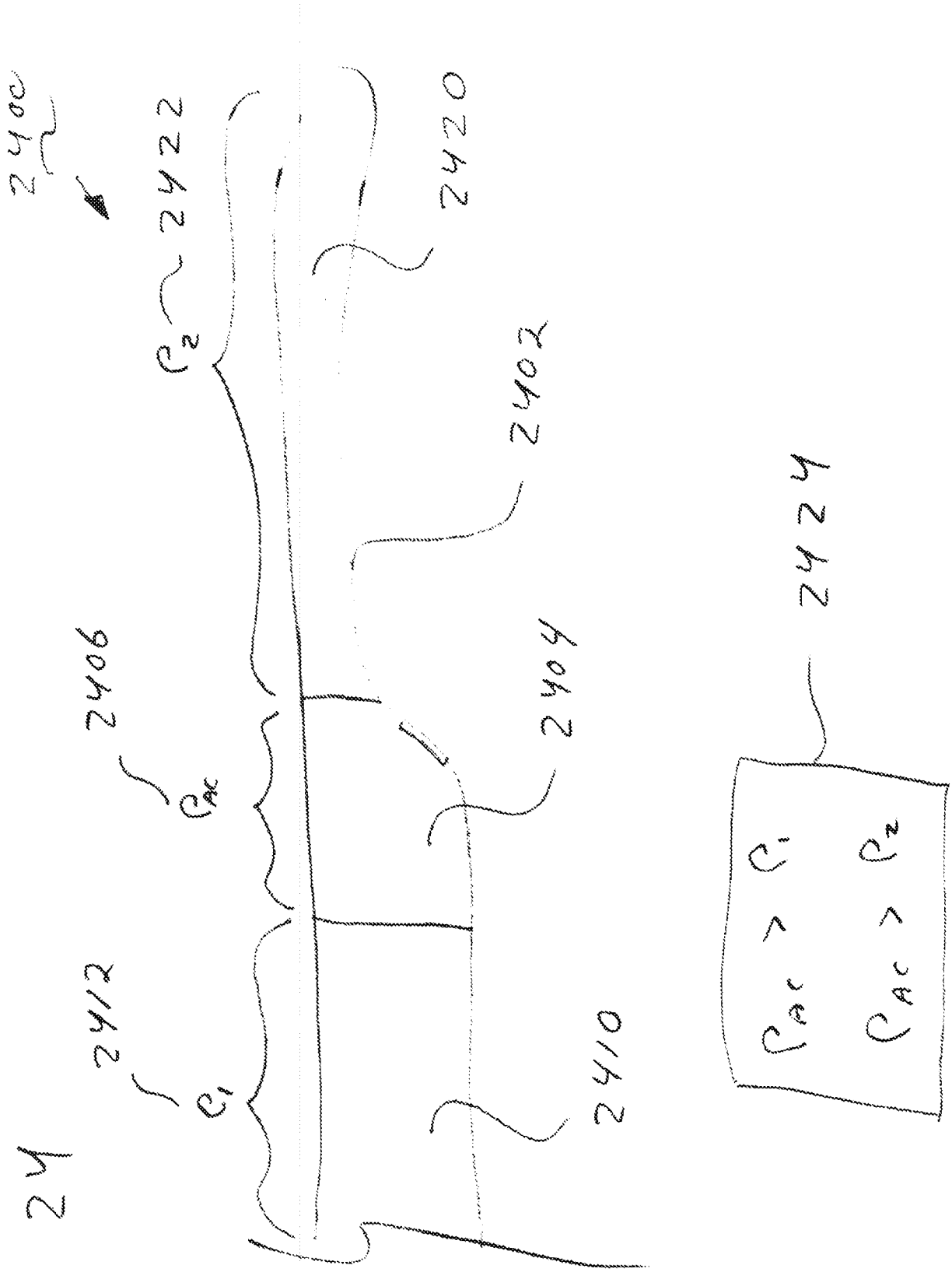
2400
2422
C_2
2420
2402
2406
C_{AC}
2404
2412
C_1
2410
2424
$C_{AC} < C_1$
$C_{AC} < C_2$

FIG 24

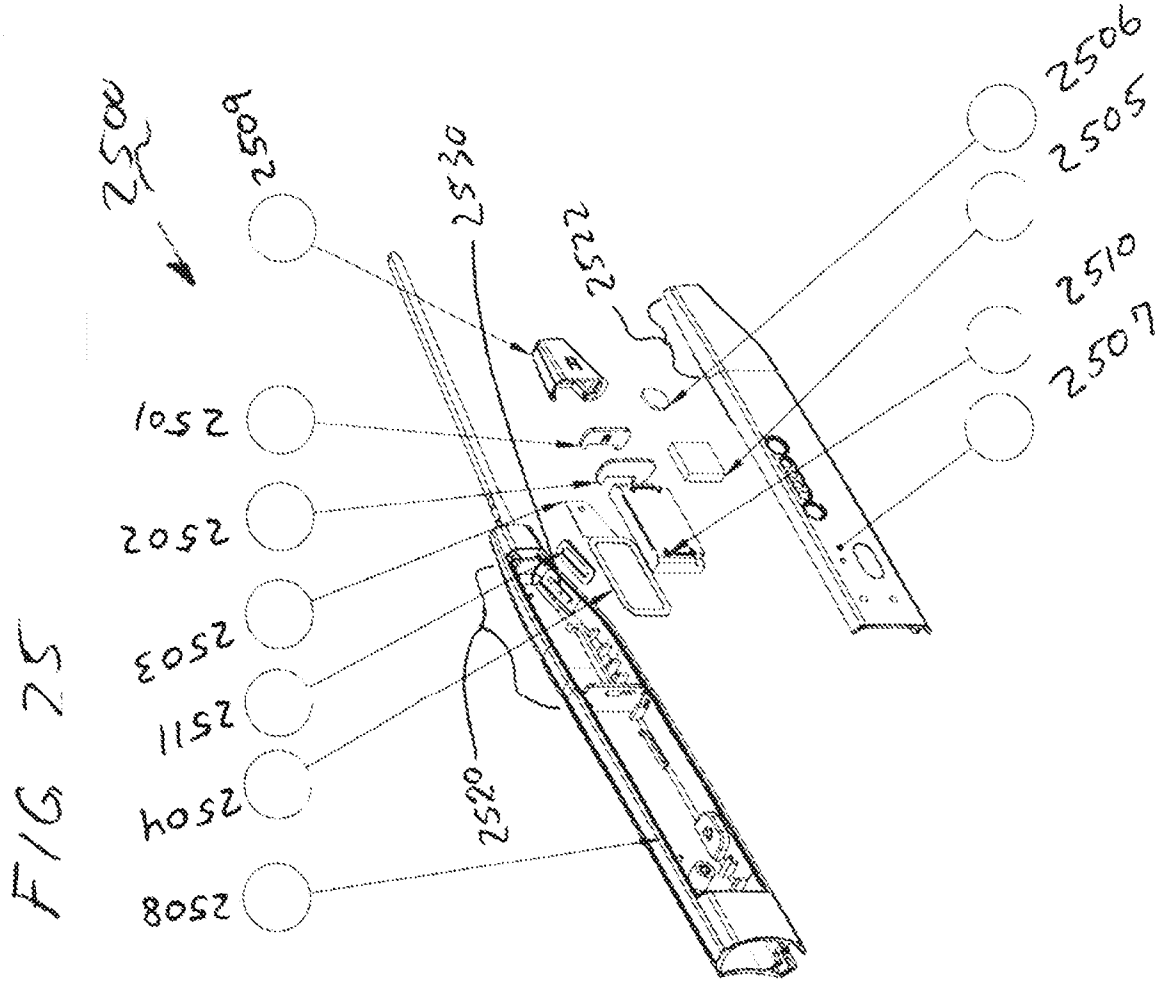
2508
2509
2530
2522
2506
2505
2510
2507
2501
2502
2503
2511
2504
2508
2520

FIG 25

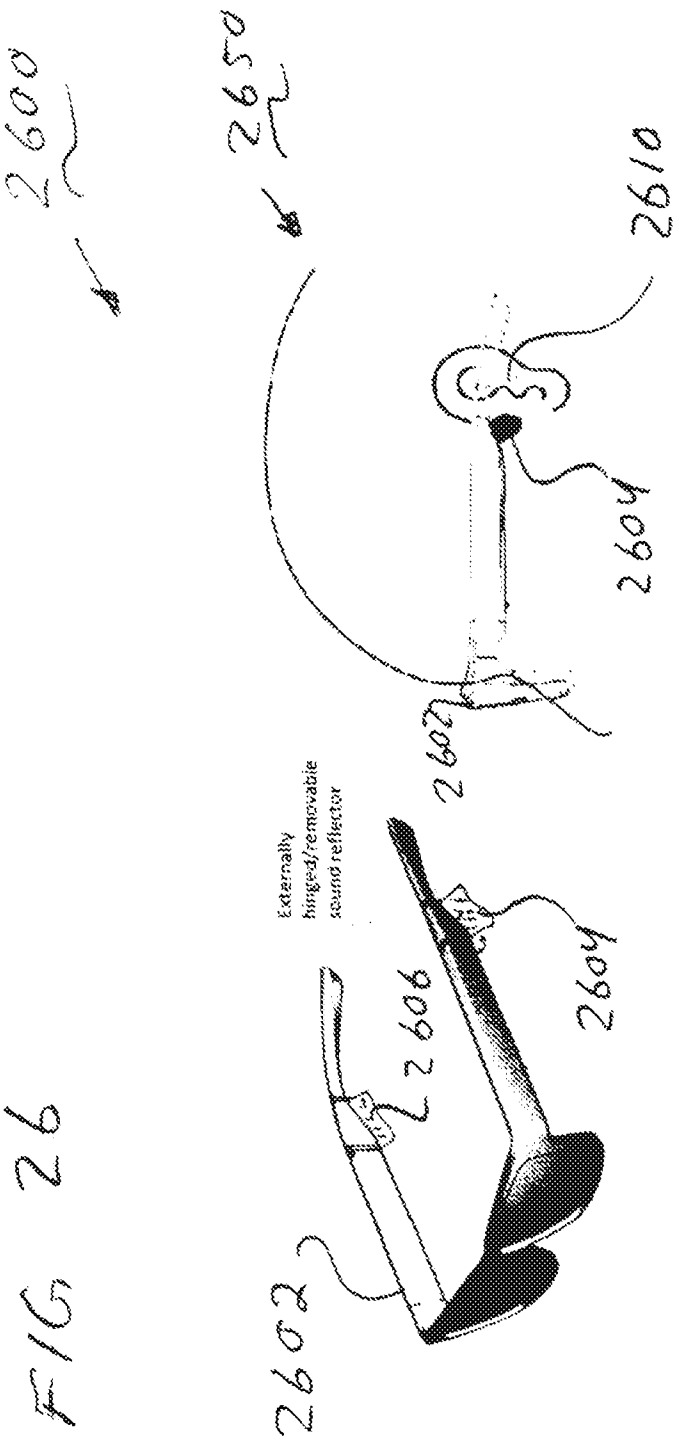
2600
2650
2610
2604
2607
externally hinged/removable sound reflector
2606
2604
2602

FIG 26

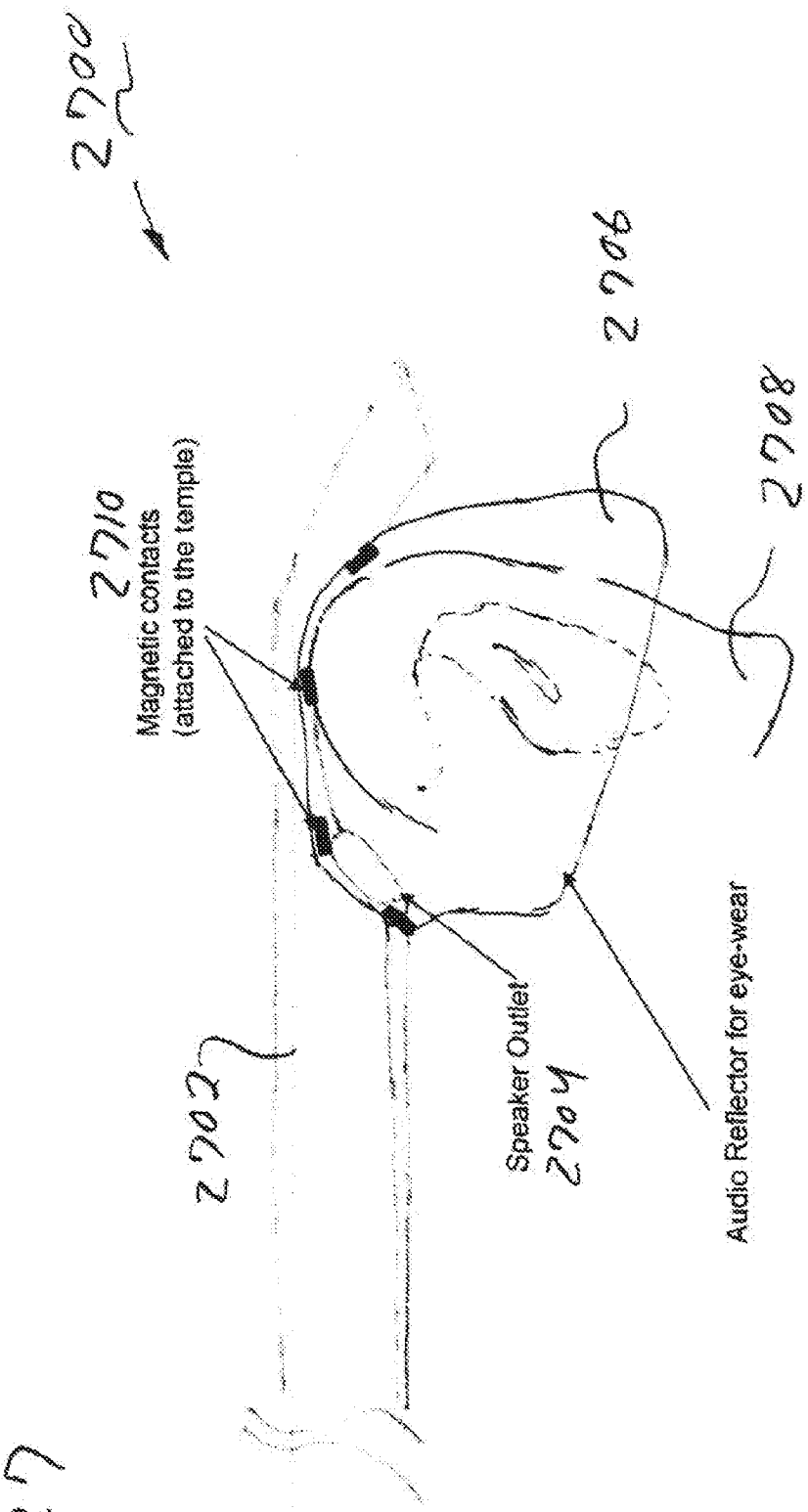
2700
2706
2708
2710
Magnetic contacts
(attached to the temple)
2702
Speaker Outlet
2704
Audio Reflector for eye-wear

FIG 27

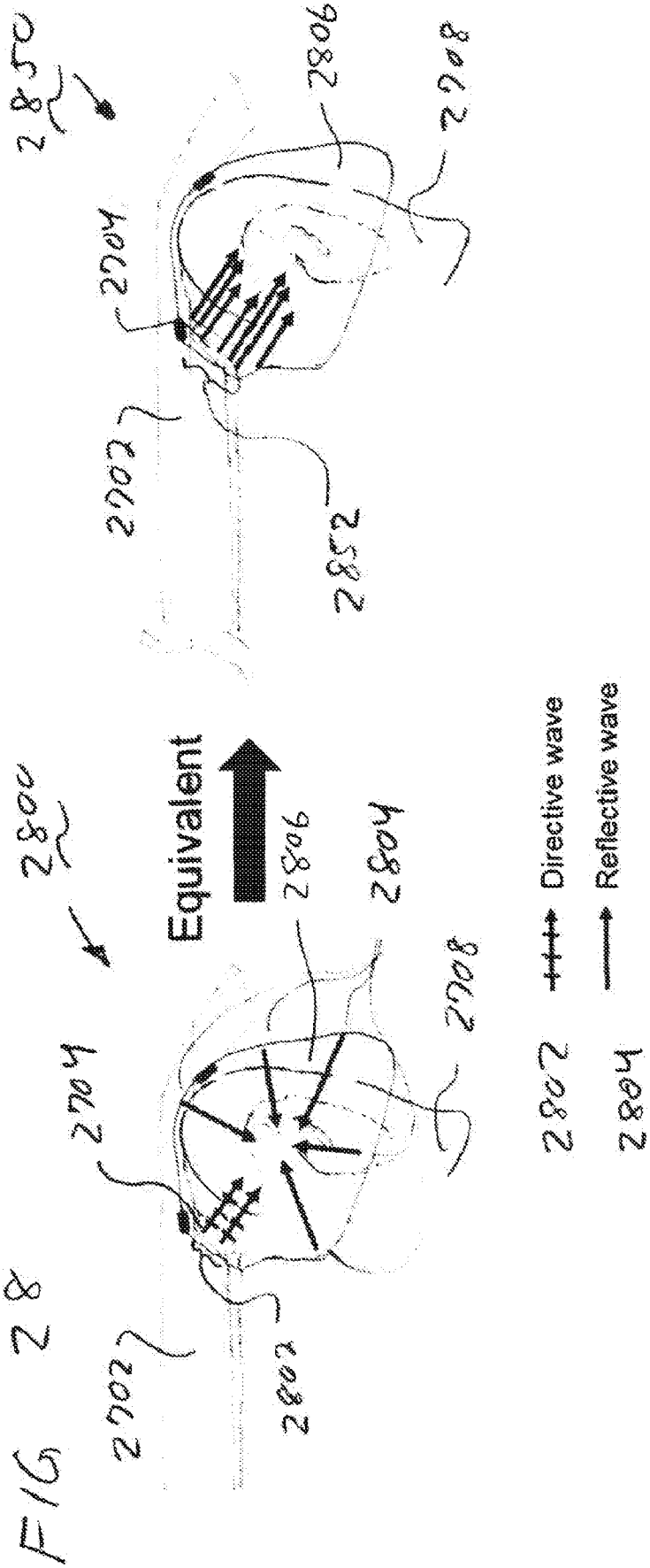
2850
2806
2708
2704
2702
2852
2800
Equivalent
2806
2804
2708
2704
2702
2802
2802 Directive wave
2804 Reflective wave

FIG 28