Acoustics: Sound Fields and Transducers

Leo L. Beranek

and Tim J. Mellow

ELSEVIER

AMSTERDAM • BOSTON • HEIDELBERG • LONDON
NEW YORK • OXFORD • PARIS • SAN DIEGO
SAN FRANCISCO • SINGAPORE • SYDNEY • TOKYO

Academic Press is an imprint of Elsevier

Luxottica et al. v. Solos
IPR2026-00413
Petitioners' Ex. 1019

Academic Press is an imprint of Elsevier
The Boulevard, Langford Lane, Kidlington, Oxford OX5 1GB, UK
225 Wyman Street, Waltham, MA 02451, USA

First edition 2012

Copyright © 2012 Elsevier Inc. All rights reserved

No part of this publication may be reproduced, stored in a retrieval system or transmitted in any form or by any means electronic, mechanical, photocopying, recording or otherwise without the prior written permission of the publisher

Permissions may be sought directly from Elsevier's Science & Technology Rights Department in Oxford, UK: phone (+44) (0) 1865 843830; fax (+44) (0) 1865 853333; email: permissions@elsevier.com. Alternatively you can submit your request online by visiting the Elsevier web site at http://elsevier.com/locate/permissions, and selecting *Obtaining permission to use Elsevier material*

Notice

No responsibility is assumed by the publisher for any injury and/or damage to persons or property as a matter of products liability, negligence or otherwise, or from any use or operation of any methods, products, instructions or ideas contained in the material herein. Because of rapid advances in the medical sciences, in particular, independent verification of diagnoses and drug dosages should be made

British Library Cataloguing in Publication Data
A catalogue record for this book is available from the British Library

Library of Congress Cataloging-in-Publication Data
A catalog record for this book is availabe from the Library of Congress

ISBN: 978-0-12-391421-7

For information on all Academic Press publications visit our web site at books.elsevier.com

Printed and bound in Great Britain

12 13 14 15 16 10 9 8 7 6 5 4 3 2 1

Working together to grow
libraries in developing countries
www.elsevier.com | www.bookaid.org | www.sabre.org
ELSEVIER BOOK AID International Sabre Foundation

CHAPTER

Sound in enclosures

10

CHAPTER OUTLINE

Part XXX: Sound Fields in Small, Regularly Shaped Enclosures 449
10.1 Introduction 449
10.2 Stationary and standing waves 450
10.3 Normal modes and normal frequencies 450
10.4 Steady-state and transient sound pressures 458
10.5 Examples of rectangular enclosures 467
Part XXXI: Sound in Large Enclosures 469
10.6 Basic matters 469
10.7 The reverberation equations 470
10.8 Air absorption 472
10.9 Total steady sound-pressure level 472
10.10 Optimum reverberation time 473
10.11 Sound Strength *G* 473
10.12 Early and reverberant sound in concert halls 475
10.13 Distance for equality of direct and reverberant sound fields 476
10.14 Sound levels for speech and music 477

PART XXX: SOUND FIELDS IN SMALL, REGULARLY SHAPED ENCLOSURES

10.1 INTRODUCTION

The study of sound in enclosures involves not only a search into how sounds are reflected backward and forward in an enclosure but also investigations into how to measure sound under such conditions and the effect various materials have in absorbing and controlling this sound. Also, of great importance in applying one's engineering knowledge of the behavior of sound in such enclosed spaces is an understanding of the personal preferences of listeners, whether listening in the room where the music is produced or listening at a remote point to a microphone pickup. Psychological criteria for acoustic design have occupied the attention of many investigators and should always be borne in mind. This chapter is confined to physical acoustics.

Two extremes to the study of sound in enclosures can be analyzed and understood easily. At the one extreme we have small enclosures of simple shape, such as rectangular boxes, cylindrical tubes, or spherical shells. In these cases the interior sound field is describable in precise mathematical terms, although the analysis becomes complicated if the walls of the enclosures are covered in whole or in part with acoustical absorbing materials.

Acoustics: Sound Fields and Transducers. DOI: 10.1016/B978-0-12-391421-7.00010-5

Copyright © 2012 Elsevier Inc. All rights reserved.

At the other extreme we have very large irregularly shaped enclosures where no precise description can be made of the sound field but where a statistically reliable statement can be made of the average conditions in the room. This is analogous to a study that a physician might make of a particular man to determine the number of years he will live, as opposed to a study of the entire population on a statistical basis to determine how long a man, on the average, will live. As might be expected, the statistical study leads to simpler formulas than the detailed study of a particular case.

10.2 STATIONARY AND STANDING WAVES

One type of small regularly shaped enclosure, the rigidly closed tube, has been discussed already in Part IV. This case provides an excellent example of the acoustical situation that exists in large enclosures.

First, we noted that along the x axis of the tube the sound field could be described as the combination of an outward-traveling wave and a backward-traveling wave. Actually, the outward-traveling wave is the sum of the original free-field wave that started out from the source plus the outward-going waves that are making their second, third, fourth, and so on, round trips. Similarly, the backward-traveling wave is a combination of the first reflected wave and of waves that are making the return leg of their second, third, fourth, and so on, round trips. These outward- and backward-traveling waves add in magnitude to produce what is called a *stationary wave* if the intensity along the tube is zero. If there is some, but not complete, absorption at the terminating end of the tube so that power flows along the tube away from the source (intensity not equal to zero), it is called a *standing wave*. In the case of complete absorption, we have a *traveling* or *progressive wave.*

10.3 NORMAL MODES AND NORMAL FREQUENCIES

We saw from Eq. (2.70) that whenever the driving frequency is such that $\sin kl \to 0$, the pressure in the tube reaches a very large value. That is to say, the pressure is very large whenever

$$kl = n\pi \tag{10.1}$$

Then, because

$$k = \frac{2\pi f}{c} = \frac{2\pi}{\lambda}$$

we have

$$f_n = \frac{nc}{2l} \tag{10.2}$$

or

$$\frac{l}{\lambda_n} = \frac{n}{2} \tag{10.3}$$

where

$$n = 1, 2, 3, 4, \ldots \infty \tag{10.4}$$

f_n is nth resonance (normal) frequency of the tube.
λ_n c/f_n is nth resonance (normal) wavelength of the tube.

Equation (10.3) tells us that the pressure is very large whenever the length of the tube equals some integral multiple of a half wavelength ($\lambda/2$).

The condition where the frequency equals $nc/2l$ so that a very large sound pressure builds up in the tube is called a *resonance* condition or a *normal mode of vibration* of the air space in the tube. The frequency f_n of a normal mode of vibration is called a *normal frequency*. There are an infinite number of normal modes of vibration for a tube because n can take on all integral values between 0 and infinity. We may look on the tube, or in fact on any enclosure, as a large number of acoustic resonators, each with its own normal frequency.

In the closed-tube discussion of Part IV, we made no mention of the effect on the results of the cross-sectional shape or size of the tube. It was assumed that the transverse dimensions were less than about 0.1 wavelength so that no transverse resonances would occur in the frequency region of interest.

If the transverse dimensions are greater than one-half wavelength, we have a small room which, if rectangular, can be described by the dimensions shown in Fig. 10.1. Waves can travel in the room backward and forward between any two opposing walls. They can travel also around the room involving the walls at various angles of incidence. If these angles are chosen properly, the waves will return on themselves and set up stationary or standing waves. Each standing wave is a normal mode of vibration for the enclosure.

In Sec. 7.18, we solve such a rectangular enclosure, mathematically and describe exactly the distribution of sound as determined by the strength of a piston source in one of the walls. In this section, however, we shall describe the simplest cases in order to gain insight into the problem.

The number of modes of vibration in a rectangular enclosure is much greater than that for the rigidly closed tube whose diameter is small compared with a wavelength. In fact, the normal frequencies of such an enclosure are given by the equation

$$f_n = \frac{\omega_n}{2\pi} = \frac{c}{2}\sqrt{\left(\frac{n_x}{l_x}\right)^2 + \left(\frac{n_y}{l_y}\right)^2 + \left(\frac{n_z}{l_z}\right)^2} \tag{10.5}$$

where

f_n is the nth normal frequency in Hz.
n_x, n_y, n_z are integers that can be chosen separately. They may take on all integral values between 0 and ∞.
l_x, l_y, l_z are dimensions of the room in m.
c is speed of sound in m/s.

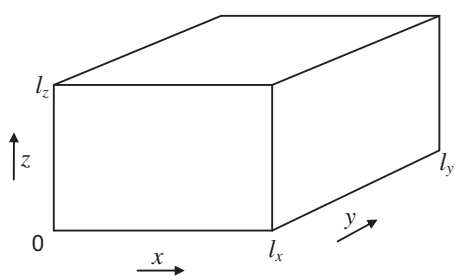

FIG. 10.1 Dimensions and coordinate system for a rectangular enclosure.

As an example, let us assume that the z dimension, l_z, is less than 0.1 of all wavelengths being considered. This corresponds to n_z being zero at all times. Hence,

$$f_{n_x,n_y,0} = \frac{c}{2}\sqrt{\left(\frac{n_x}{l_x}\right)^2 + \left(\frac{n_y}{l_y}\right)^2} \tag{10.6}$$

Let $l_x = 4$ m and $l_y = 3$ m. Find the normal frequencies of the $n_x = 1$, $n_y = 1$ and the $n_x = 3$, $n_y = 2$ normal modes of vibration. We have

$$f_{1,1,0} = {}^{344.8}/_{2}\sqrt{{}^{1}/_{16} + {}^{1}/_{9}} = 71.8 \text{ Hz}$$

and

$$f_{3,2,0} = {}^{344.8}/_{2}\sqrt{{}^{9}/_{16} + {}^{4}/_{3}} = 237 \text{ Hz}$$

The sound-pressure distribution in a rectangular box for each normal mode of vibration with a normal frequency ω_n is proportional to the product of three cosines:

$$p_{n_x,n_y,n_z} \propto \cos\frac{\pi n_x x}{l_x}\cos\frac{\pi n_y y}{l_y}\cos\frac{\pi n_z z}{l_z}\, e^{j\omega_n t} \tag{10.7}$$

where the origin of coordinates is at the corner of the box. It is assumed in writing Eq. (10.7) that the walls have very low absorption. If the absorption is high, the sound pressure cannot be represented by a simple product of cosines.

If we inspect Eq. (10.7) in detail, we see that n_x, n_y, and n_z indicate the number of planes of zero pressure occurring along the x, y, and z coordinates, respectively. Such a distribution of sound pressure levels can be represented by forward- and backward-traveling waves in the room. This situation is analogous to that for the closed tube (one-dimensional case). Examples of pressure distributions for three modes of vibration in a rectangular room are shown in Fig. 10.2. The lines indicate planes of constant pressure extending from floor to ceiling along the z dimension. Note that n_x and n_y indicate the number of planes of zero pressure occurring along the x and y coordinates, respectively.

The angles θ_x, θ_y, and θ_z at which the forward- and backward-traveling waves are incident upon and reflect from the walls are given by the relations

$$\theta_x = \arctan\frac{\sqrt{(n_y/l_y)^2 + (n_z/l_z)^2}}{n_x/l_x} = \arccos\frac{n_x c}{2 l_x f_n} \tag{10.8}$$

$$\theta_y = \arctan\frac{\sqrt{(n_x/l_x)^2 + (n_z/l_z)^2}}{n_y/l_y} = \arccos\frac{n_y c}{2 l_y f_n} \tag{10.9}$$

$$\theta_z = \text{similarly} \tag{10.10}$$

For the examples where $n_x = 1$, $n_y = 1$ and $n_x = 3$, $n_y = 2$, the traveling waves reflect from the $x = 0$ and $x = l_x$ walls at

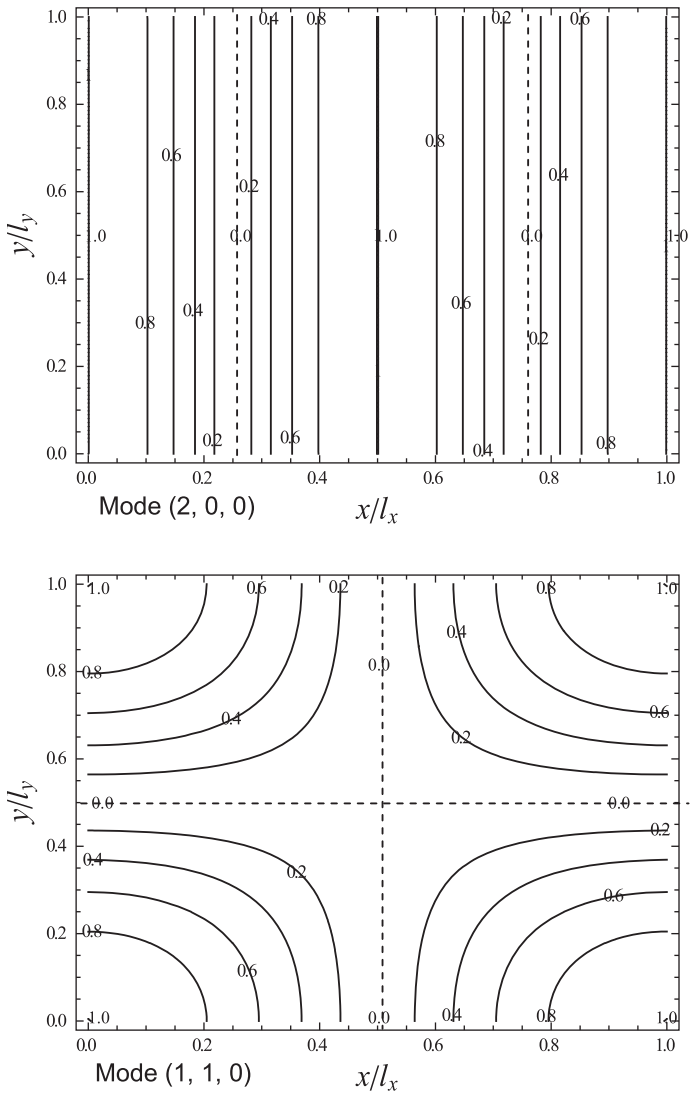

FIG. 10.2 Sound-pressure contour plots on a section through a rectangular room.

The numbers on the plots indicate the relative sound pressure.

$$(\theta_x)_{1,1,0} = \arctan \frac{l_x}{l_y} = \arctan \frac{4}{3} = 53.1\,^\circ$$

$$(\theta_x)_{3,2,0} = \arctan \frac{2l_x}{3l_y} = \arctan \frac{8}{9} = 41.6\,^\circ$$

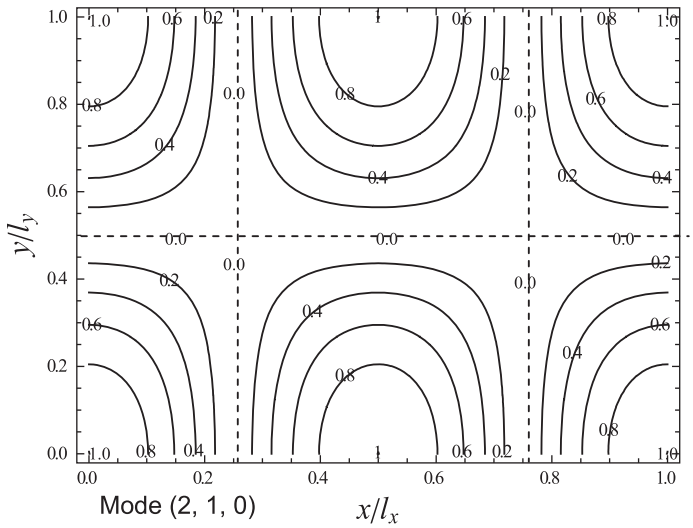

FIG. 10.2 (***continued***)

The angles of reflection at the $y = 0$ and $y = l_y$ walls are

$$(\theta_y)_{1,1,0} = \arctan \frac{l_y}{l_x} = \arctan \frac{3}{4} = 36.9^\circ$$

$$(\theta_y)_{3,2,0} = \arctan \frac{3l_y}{2l_x} = \arctan \frac{9}{8} = 48.4^\circ$$

The wave fronts travel as shown in (a) and (b) of Fig. 10.3. It is seen that there are two forward-traveling waves (1 and 3) and two backward-traveling waves (2 and 4). In the three-dimensional case, there will be four forward- and four backward-traveling waves.

When the acoustical absorbing materials are placed on some or all surfaces in an enclosure, energy will be absorbed from the sound field at these surfaces and the sound-pressure distribution will be changed from that for the hard-wall case. For example, if an absorbing material were put on one of the $l_x l_z$ walls, the sound pressure at that wall would be lower than at the other $l_x l_z$ wall and the traveling wave would undergo a phase shift as it reflected from the absorbing surface.

All normal modes of vibration cannot be excited to their fullest extent by a sound source placed at other than a maximum pressure point in the room. In Fig. 10.2, for example, the source of sound can excite only a normal mode to its fullest extent if it is at a 1.0 contour. Obviously, since the peak value of sound pressure occurs on a 1.0 contour, the microphone also must be located on a 1.0 contour to measure the maximum pressure.

If the source is at a corner of a rectangular room, it will be possible for it to excite every mode of vibration to its fullest extent provided it radiates sound energy at every normal frequency. Similarly, if a microphone is at the corner of the room, it will measure the peak sound pressure for every normal mode of vibration provided the mode is excited.

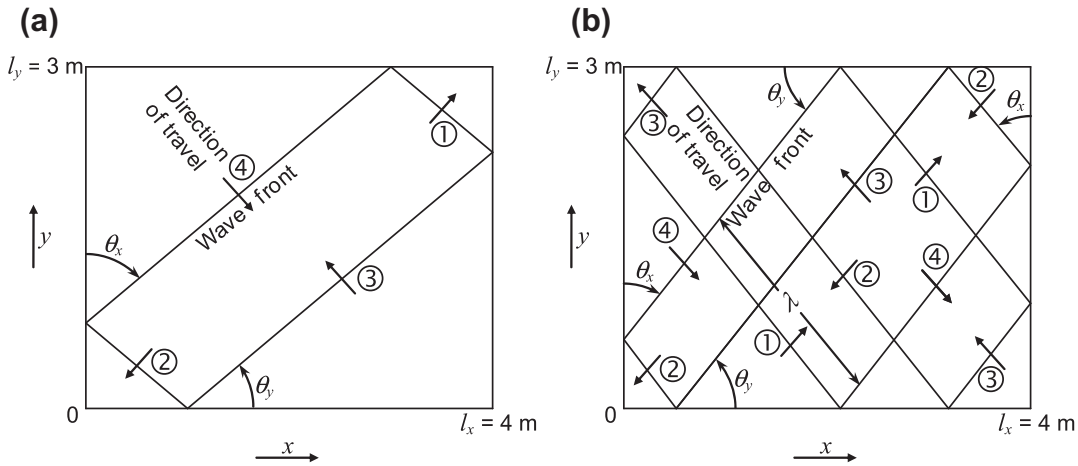

FIG. 10.3 Wave fronts and direction of travel for (a) $n_x = 1$, $n_y = 1$ normal mode of vibration; and (b) $n_x = 3$ and $n_y = 2$ normal mode of vibration.

These represent two-dimensional cases where $n_z = 0$. The numbers one and three indicate forward-traveling waves, and the numbers two and four indicate backward-traveling waves.

If either the source or the microphone is at the center of a rectangular room, only one-eighth of the normal modes of vibration will be excited or detected, because at the center of the room seven-eighths of the modes have contours of zero pressure. In Fig. 10.2, as an illustration, two out of the three normal modes portrayed have contours of zero pressure at the center of the room. In fact, only those modes of vibration having even numbers simultaneously for n_x, n_y, and n_z will not have zero sound pressure at the center.

Examples of the transmission of sound from a point source to an observation point in a model sound chamber are shown in Fig. 10.4 and Fig. 10.5. The curves were obtained using the following equation for the pressure at the observation point (x, y, z):

$$\tilde{p}(x,y,z) = -\frac{4\,\rho_0 c \tilde{U}_0}{l_x l_y} \sum_{m=0}^{\infty} \sum_{n=0}^{\infty} \frac{k \cos(m\,\pi x_0/l_x) \cos(n\,\pi y_0/l_y) \cos(m\,\pi x/l_x) \cos(n\,\pi y/l_y)}{k_{mn}(1+\delta_{m0})(1+\delta_{0n})} \times \frac{\dfrac{k_{mn} Z_s}{k\rho_0 c} \cos k_{mn} z + j \sin k_{mn} z}{\cos k_{mn} l_z + j\,\dfrac{k_{mn} Z_s}{k\rho_0 c} \sin k_{mn} l_z} \tag{10.11}$$

where

$$k_{mn} = \sqrt{k^2 - \left(\frac{m\pi}{l_x}\right)^2 - \left(\frac{n\pi}{l_y}\right)^2} \tag{10.12}$$

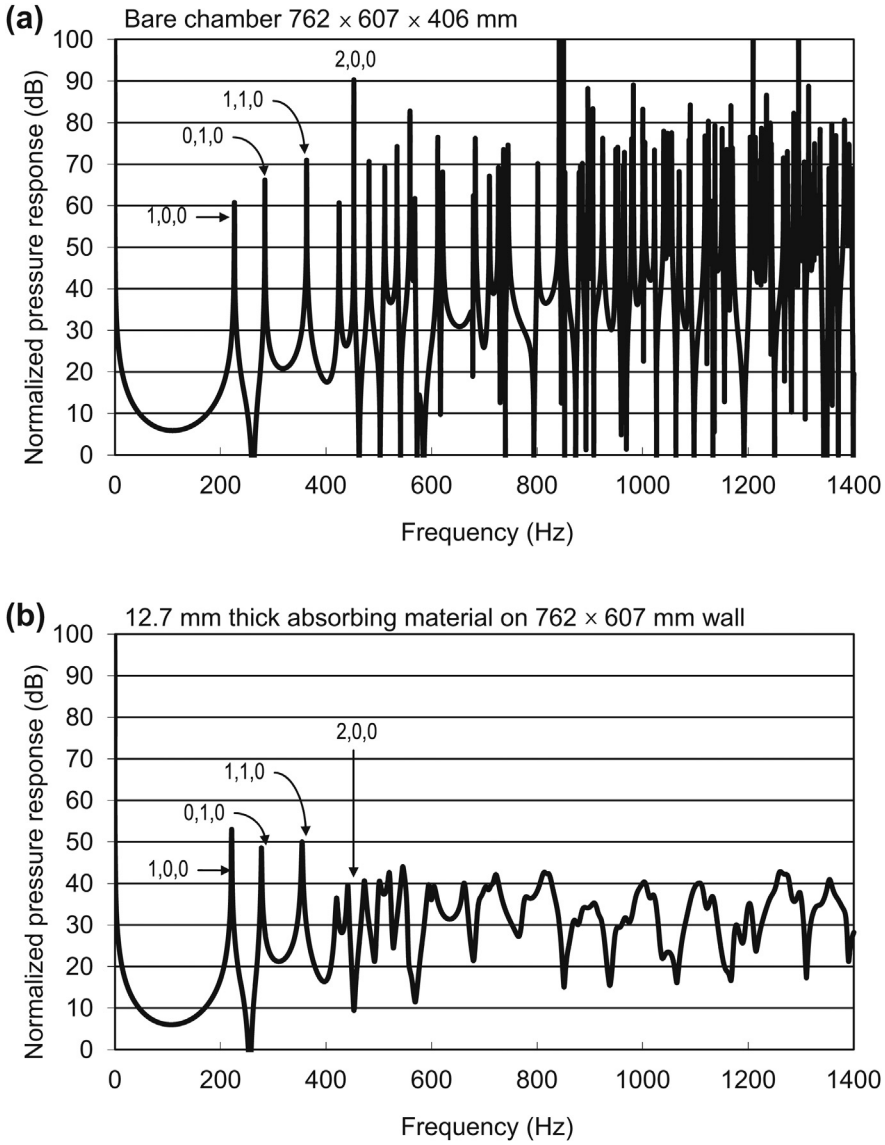

FIG. 10.4 Comparison of two transmission curves calculated with and without an absorbing sample on a 762 by 607 mm wall of a model chamber with dimensions 762 by 607 by 406 mm. (a) bare chamber, (b) one wall absorbent where $R_f d/3 \approx \rho_0 c$.

The source was in one corner (l_x, l_y, l_z), and the observation point was diagonally opposite (0, 0 ,0). The plots are of $20 \log_{10}(l_x l_y \tilde{p}(x,y,z)/(\rho_0 c \tilde{U}_0))$, where $\tilde{p}(x,y,z)$ is calculated from Eq. (10.11). This result has also been verified experimentally [14].

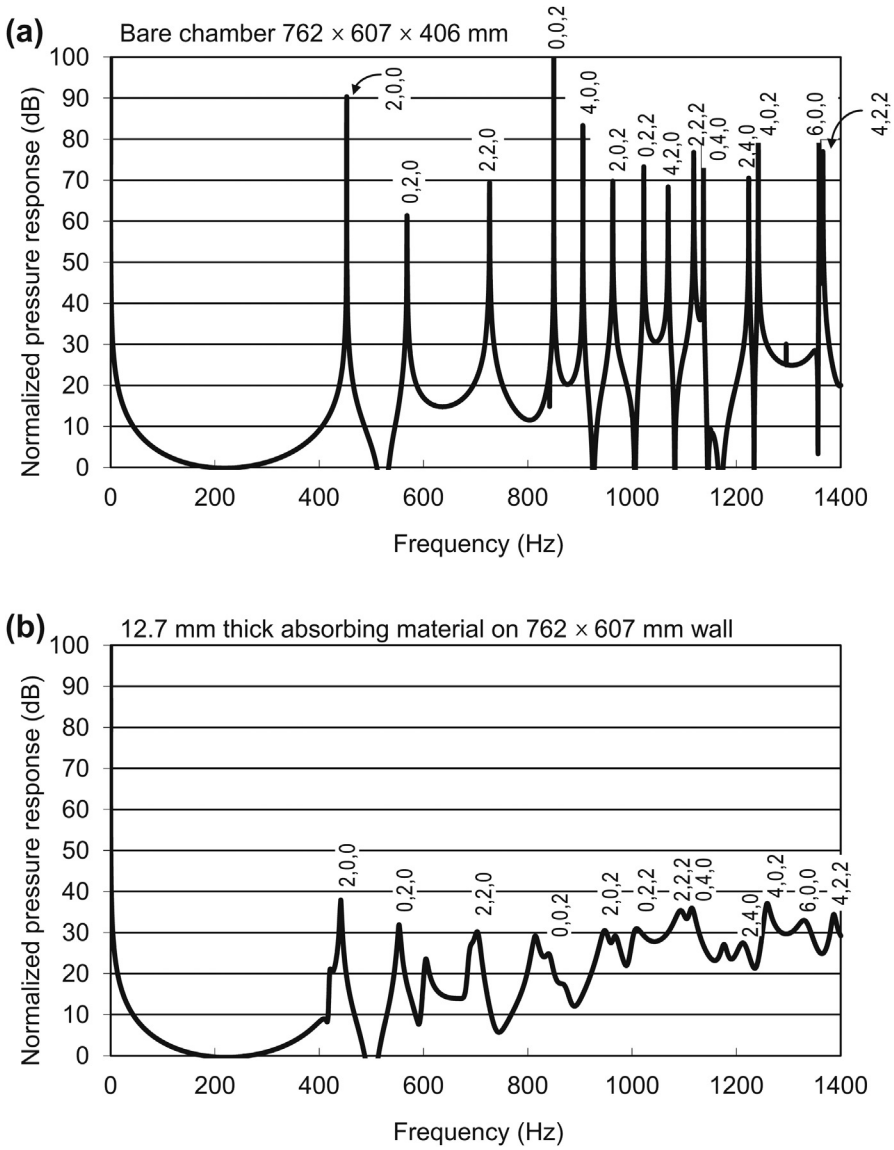

FIG. 10.5 Same as Fig. 10.4, except that the point of observation is in the center of the room ($l_x/2$, $l_y/2$, $l_z/2$). (a) bare chamber, (b) one wall absorbent.

and $k = \omega/c = 2\pi/\lambda$, which is derived in the same way as we derive the 2-port network for a bass-reflex enclosure in Part XXIV, except that the rectangular pistons are replaced by a point source of volume velocity $\tilde{U}_0$ at a point (x_0, y_0, l_z) described by the Dirac delta function

$$\delta(x - x_0)\ \delta(y - y_0).$$

The absorbing material at $z = 0$ has a specific impedance Z_s, which is related to the flow resistance R_f of the material by

$$Z_s = \frac{R_f d}{3} + \frac{P_0}{j\,\omega d} \tag{10.13}$$

where d is the thickness for the material, which is subtracted from l_z. The eightfold increase in the number of modes of vibration that were excited with the source at the corner over that with the source at the center is apparent. It is apparent also that the addition of sound-absorbing material decreases the height of resonance peaks and smoothes the transmission curve, particularly at the higher frequencies, where the sound-absorbing material is most effective.

10.4 STEADY-STATE AND TRANSIENT SOUND PRESSURES

Sound pressure at normal modes. When a source of sound is turned on in a small enclosure, such as that of Fig. 10.1, it will excite one or more of the stationary-wave possibilities, i.e., normal modes of vibration in the room. Let us assume that the source is constant in strength and is of a single frequency and that its frequency coincides with one of the normal frequencies of the enclosure. The sound pressure for that normal mode of vibration will build up until the magnitude of its rms value (averaged in time and also in space by moving the microphone backward and forward over a wavelength) equals [14]

$$|p_n| = \frac{K}{k_n} \tag{10.14}$$

where

K is source constant determined principally by the strength and location of the source and by the volume of the room.

k_n is damping constant determined principally by the amount of absorption in the room and by the volume of the room. The more absorbing material that is introduced into the room, the greater k_n becomes, and the smaller the value of the average pressure. The value of k_n is inversely proportional to the value of Q_n.

Blocked-tube impedance and equivalent circuit. In order to illustrate what happens when the driving frequency does not necessarily coincide with the normal frequency, we shall simplify the problem by considering only those modes of vibration which occur in one direction only. Hence we may model the room as a one-dimensional tube. Furthermore, although absorption mainly occurs at boundary surfaces, we may simplify the problem even further by assuming that it occurs everywhere. Also, we assume the acoustic resistance to have the same value at all frequencies, although this is unlikely in practice. However, if the variation of resistance with frequency is known, the resistance value at each normal frequency may be used to improve accuracy.

According to Eq. (2.72), the specific impedance Z_T of a blocked tube is given by

$$Z_T = -jZ_s \cot \boldsymbol{k}l \tag{10.15}$$

which is expanded using Eq. (43) from Appendix II:

$$Z_T = -jZ_s \sum_{n=0}^{\infty} \frac{(2-\delta_{0n})\boldsymbol{k}l}{(\boldsymbol{k}l)^2 - n^2\pi^2} \tag{10.16}$$

where from Eqs. (2.80), (2.84), and (2.85), the complex wavenumber $\boldsymbol{k}$ and characteristic impedance Z_s are given by

$$\boldsymbol{k} = \omega\sqrt{\frac{1}{P_0}\left(\rho_0 + \frac{R_f}{j\omega}\right)} \tag{10.17}$$

$$Z_s = \sqrt{P_0\left(\rho_0 + \frac{R_f}{j\omega}\right)} \tag{10.18}$$

where P_0 is the static pressure, ρ_0 is the density of air, and R_f is the flow resistance per unit length of the filling material. Hence, the impedance of the tube may be written

$$Z_T = \frac{1}{C_0 s} + \sum_{n=1}^{\infty} Z_n \tag{10.19}$$

where each impedance term is represented by a parallel resonance circuit in which

$$Z_n = \frac{1}{C_n} \cdot \frac{s + \dfrac{R_n}{L_n}}{s^2 + \dfrac{R_n}{L_n}s + \dfrac{1}{L_n C_n}} \tag{10.20}$$

where $s = \omega$ and the specific compliance C_n, mass L_n, and resistance R_n element values are given by

$$C_0 = \frac{l}{P_0}, \qquad C_n = \frac{l}{2P_0}, \qquad L_n = \frac{2\rho_0 l}{n^2\pi^2}, \qquad R_n = \frac{2R_f l}{n^2\pi^2} \tag{10.21}$$

or

$$Z_n = \frac{1}{C_n} \cdot \frac{s + \dfrac{\omega_n}{Q_n}}{s^2 + \dfrac{\omega_n}{Q_n}s + \omega_n^2} \tag{10.22}$$

where the angular normal frequency ω_n and Q_n values are given by

$$\omega_n = \frac{1}{\sqrt{L_n C_n}} = \frac{n\pi c}{1/\sqrt{\gamma}}, \qquad Q_n = \omega_n \frac{\rho_0}{R_f} = \frac{n\pi\rho_0 c}{\sqrt{\gamma} R_f l} \tag{10.23}$$

The equivalent circuit for a blocked tube using this impedance expansion is shown in Fig. 10.6a.

Alternatively, we may use the expansion of Eq. (42) from Appendix II for the admittance:

$$Z_T = -j\frac{Z_s}{\tan \boldsymbol{k}l} = \left(\sum_{n=0}^{\infty} Y_n\right)^{-1} \tag{10.24}$$

where

$$Y_n = \frac{\dfrac{1}{L_n}s}{s^2 + \dfrac{R_n}{L_n}s + \dfrac{1}{L_n C_n}} \tag{10.25}$$

and

$$C_n = \frac{2l}{\left(n+\dfrac{1}{2}\right)^2 \pi^2 P_0}, \qquad L_n = \frac{\rho_0 l}{2}, \qquad R_n = \frac{R_f l}{2} \tag{10.26}$$

so that

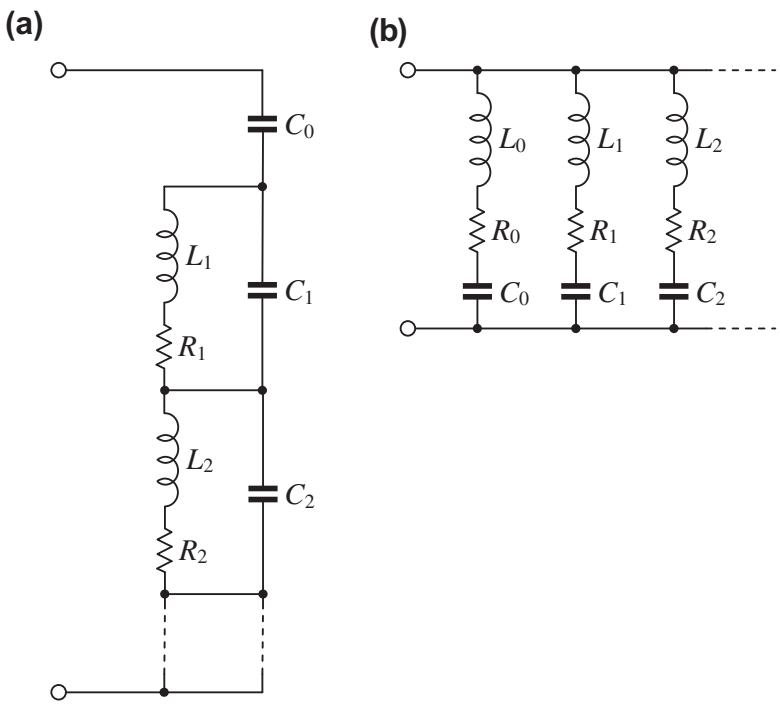

FIG. 10.6 Equivalent circuits for the impedance Z_T of a blocked tube using an impedance expansion (a) and an admittance expansion (b).

$$\omega_n = \frac{1}{\sqrt{L_n C_n}} = \frac{\left(n+\frac{1}{2}\right)\pi c}{l\sqrt{\gamma}}, \qquad Q_n = \omega_n \frac{\rho_0}{R_f} = \frac{\left(n+\frac{1}{2}\right)\pi \rho_0 c}{\sqrt{\gamma} R_f l} \tag{10.27}$$

The equivalent circuit for a blocked tube using this admittance expansion is shown in Fig. 10.6b. In general we use the impedance expansion to calculate the time response of the pressure as a function of an input velocity and the admittance expansion to calculate the time response of the velocity as a function of an input pressure.

Open-tube impedance and equivalent circuit. Although we shall only consider the decay of sound in a blocked tube, the equivalent circuit of an open tube is derived here just for completeness as it is frequently encountered in the field of acoustics.

According to Eq. (2.60) with $Z_T = 0$, the specific impedance Z_T of an open tube is given by

$$Z_T = jZ_s \tan \boldsymbol{k}l \tag{10.28}$$

which is expanded using Eq. (42) from Appendix II:

$$Z_T = \sum_{n=0}^{\infty} Z_n \tag{10.29}$$

where

$$Z_n = \frac{1}{C_n} \cdot \frac{s + \frac{R_n}{L_n}}{s^2 + \frac{R_n}{L_n} s + \frac{1}{L_n C_n}} \tag{10.30}$$

and

$$C_n = \frac{l}{2P_0}, \qquad L_n = \frac{2\rho_0 l}{\left(n+\frac{1}{2}\right)^2 \pi^2}, \qquad R_n = \frac{2R_f l}{\left(n+\frac{1}{2}\right)^2 \pi^2} \tag{10.31}$$

or

$$Z_n = \frac{1}{C_n} \cdot \frac{s + \frac{\omega_n}{Q_n}}{s^2 + \frac{\omega_n}{Q_n} s + \omega_n^2} \tag{10.32}$$

where

$$\omega_n = \frac{1}{\sqrt{L_n C_n}} = \frac{\left(n+\frac{1}{2}\right)\pi c}{1/\sqrt{\gamma}}, \qquad Q_n = \omega_n \frac{\rho_0}{R_f} = \frac{\left(n+\frac{1}{2}\right)\pi \rho_0 c}{\sqrt{\gamma} R_f l} \tag{10.33}$$

The equivalent circuit for an open tube using this impedance expansion is shown in Fig. 10.7a. Alternatively, we may use the expansion of Eq. (43) from Appendix II for the admittance:

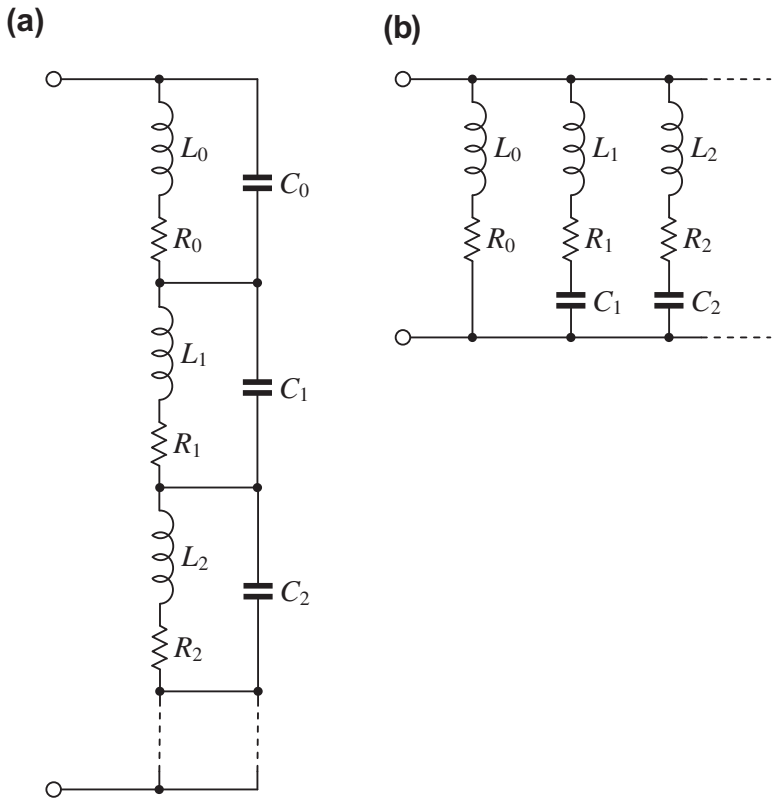

FIG. 10.7 Equivalent circuits for the impedance Z_T of an open tube using an impedance expansion (a) and an admittance expansion (b).

$$Z_T = j\frac{Z_s}{\cot \boldsymbol{k}l} = \left(\frac{\dfrac{1}{L_0}}{s + \dfrac{R_0}{L_0}} + \sum_{n=1}^{\infty} Y_n\right)^{-1} \tag{10.34}$$

where

$$Y_n = \frac{\dfrac{1}{L_n}s}{s^2 + \dfrac{R_n}{L_n}s + \dfrac{1}{L_n C_n}} \tag{10.35}$$

and

$$C_n = \frac{2l}{n^2\pi^2 P_0}, \qquad L_0 = \rho_0 l, \qquad L_n = \frac{\rho_0 l}{2}, \qquad R_0 = R_f l, \qquad R_n = \frac{R_f l}{2} \tag{10.36}$$

so that

$$\omega_n = \frac{1}{\sqrt{L_n C_n}} = \frac{n\pi c}{l\sqrt{\gamma}}, \qquad Q_n = \omega_n \frac{\rho_0}{R_f} = \frac{n\pi\rho_0 c}{\sqrt{\gamma} R_f l} \tag{10.37}$$

The equivalent circuit for an open tube using this admittance expansion is shown in Fig. 10.7b.

Resonance curve. When the driving frequency does not coincide with the normal frequency, the pressure for that particular mode of vibration builds up according to a standard resonance curve as shown in Fig. 10.8. The maximum value of the resonance curve is given by

$$\begin{aligned} Z_n\big|_{\omega=\omega_n} &= (Q_n + j)Q_n R_n \\ &\approx Q_n^2 R_n, \quad Q_n \geq 3 \end{aligned} \tag{10.38}$$

The width of the resonance curve at the half-power (3 dB down) points is equal to [1]

$$f'' - f \approx \frac{f_n}{Q_n} \tag{10.39}$$

When driven by an excitation velocity u_0, the magnitude of the sound pressure p_n for a single mode as a function of frequency is given by

$$|p_n| = u_0 |Z_n| = \frac{u_0}{C_n}\sqrt{\frac{Q_n^2\omega^2 + \omega_n^2}{Q_n^2(\omega_n^2 - \omega^2)^2 + \omega_n^2\omega^2}} \tag{10.40}$$

where ω is the angular driving frequency and ω_n is the angular normal frequency given approximately by Eq. (10.5).

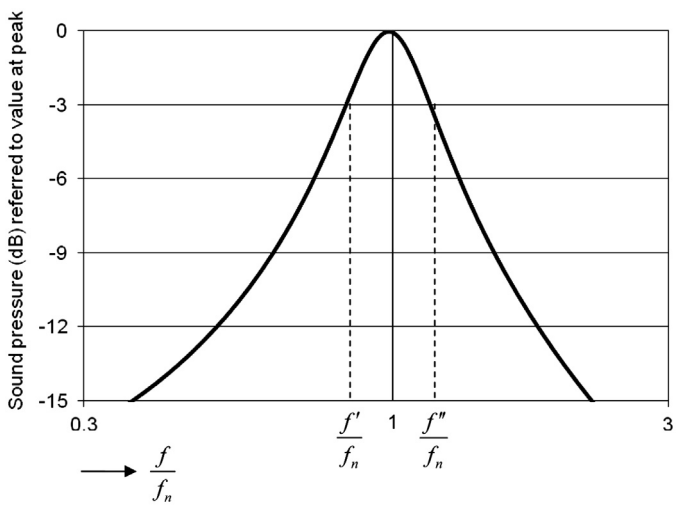

FIG. 10.8 Resonance curve for a normal mode of vibration with $Q_n = 3$.

Sound pressure level vs. the ratio of frequency to f_n.

Obviously, if the driving frequency lies between two normal frequencies, or if k_n is large so that the resonance curve is broad, more than one normal mode of vibration will be excited significantly, each to the extent shown by Eq. (10.40). Because the phase above a normal frequency is opposite to that below it, there will be a cancellation at some frequency between a pair of adjacent normal frequencies, leading to a minimum impedance value. These minimum impedance frequencies correspond to the resonance frequencies ω_n in the admittance expansion.

Transient response. When the source of sound is turned off, each normal mode of vibration behaves like an electrical parallel-resonance circuit in which energy has been stored initially. The pressure for each normal mode of vibration will decay exponentially at its own normal frequency as shown in Fig. 10.9. In order to simulate the decay of sound, let us apply an impulse to our tube model, rather like a hand clap in a room. We simply take the expression for the impedance of each mode given by Eq. (10.22) and apply the inverse Laplace transform given by Table 6.2 in Sec. 6.17 to obtain

$$p_n(t) = u_0 Z_n(t) = \frac{u_0}{C_n} e^{-\omega_n t \cos\theta_n} \frac{\sin(\theta_n + \omega_n t \sin\theta_n)}{\sin\theta_n} \tag{10.41}$$

where $\cos\theta_n = 1/(2Q_n)$. If only one mode of vibration is excited, the decay is as shown in Fig. 10.9a. Stated differently, on a log p_n scale vs. time, the magnitude of the rms sound pressure level decays linearly with time.

If two or more modes of vibration are decaying simultaneously, beats will occur because each has its own normal frequency (Fig. 10.9b). However, as we superimpose an ever greater number of modes, the waveform becomes a series of impulses (Fig. 10.9c), as we would expect, due to the original impulse being reflected at each end of the tube and thus making multiple round journeys along it. In a real room, as opposed to a simple one-dimensional tube, early reflections would behave in a similar manner, being distinct and thus *specular* in nature. However, later reflections resulting from random reflections off multiple surfaces tend to cluster together and are termed *diffuse*.

In this illustration, each mode has the same decay constant ($\omega_n/2Q_n = R_f/2\rho_0$) because the specific flow resistance per unit length R_f has been assumed to be independent of frequency. However, it is very possible that each will have its own decay constant, dependent upon the position of the absorbing materials in the room.

In actual measurements of sound in rooms, it is quite common to use fast Fourier transforms (FFTs) to create waterfall plots of the sound-pressure decay against both time T and frequency f, which in this case is obtained as follows:

$$p_n(f,T) = \frac{u_0}{C_n} \int_{T-\delta t}^{T+\delta t} \left(0.54 - 0.46\cos\frac{t - T + \delta t}{\delta t}\pi\right) e^{-\omega_n t \cos\theta_n} \frac{\sin(\theta_n + \omega_n t \sin\theta_n)}{\sin\theta_n} e^{j2\pi f t}\, dt \tag{10.42}$$

where the integration is performed over a sliding interval or "window" of width $2\delta t$ centered on the time of interest T. The term in parenthesis is the Hamming window function, which minimizes any unwanted frequency components that may otherwise appear in the spectrum due to the finite integral limits. In this way we can plot the variation of the frequency spectrum with time

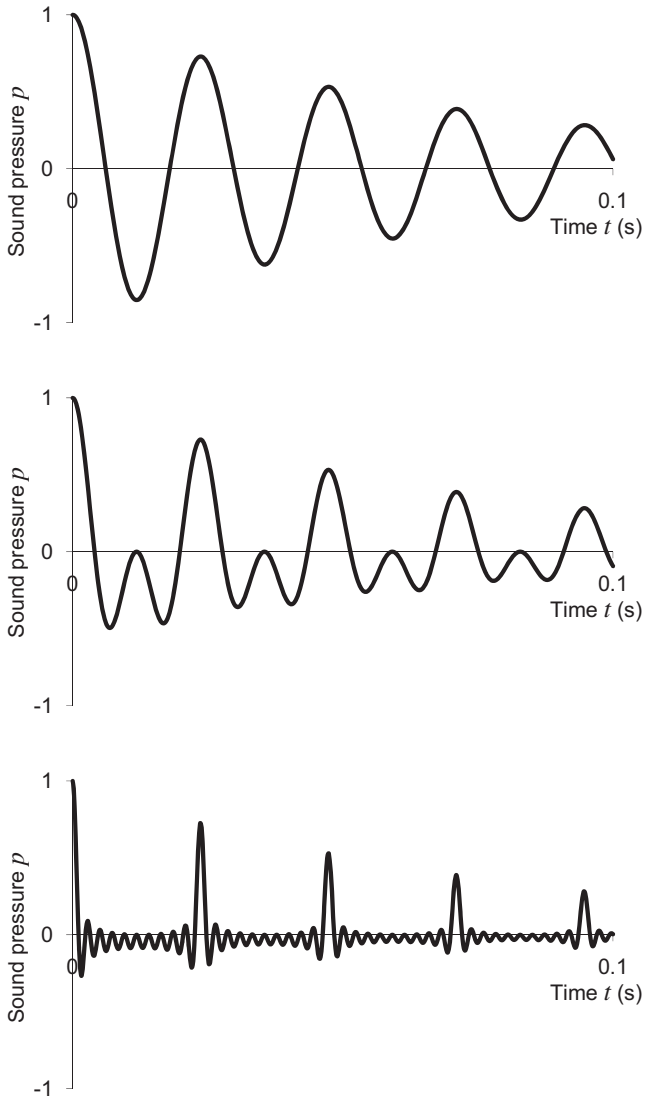

FIG. 10.9 (a) Sound-pressure decay curve for the first mode of vibration. (b) Sound-pressure decay curve for the first two modes of vibration. (c) Sound-pressure decay curve for the first ten modes of vibration in a blocked tube, where l = 3.5 m and R_f = 10 rayls/m.

and thus see how the individual normal modes of vibration decay relative to each other, as shown in Fig. 10.10.

In summary, we see that when a sound source of a given frequency is placed in an enclosure, it will excite one or more of the infinity of resonance conditions, called normal modes of vibration. Each of those normal modes of vibration has a different distribution of sound pressures in the enclosure, its

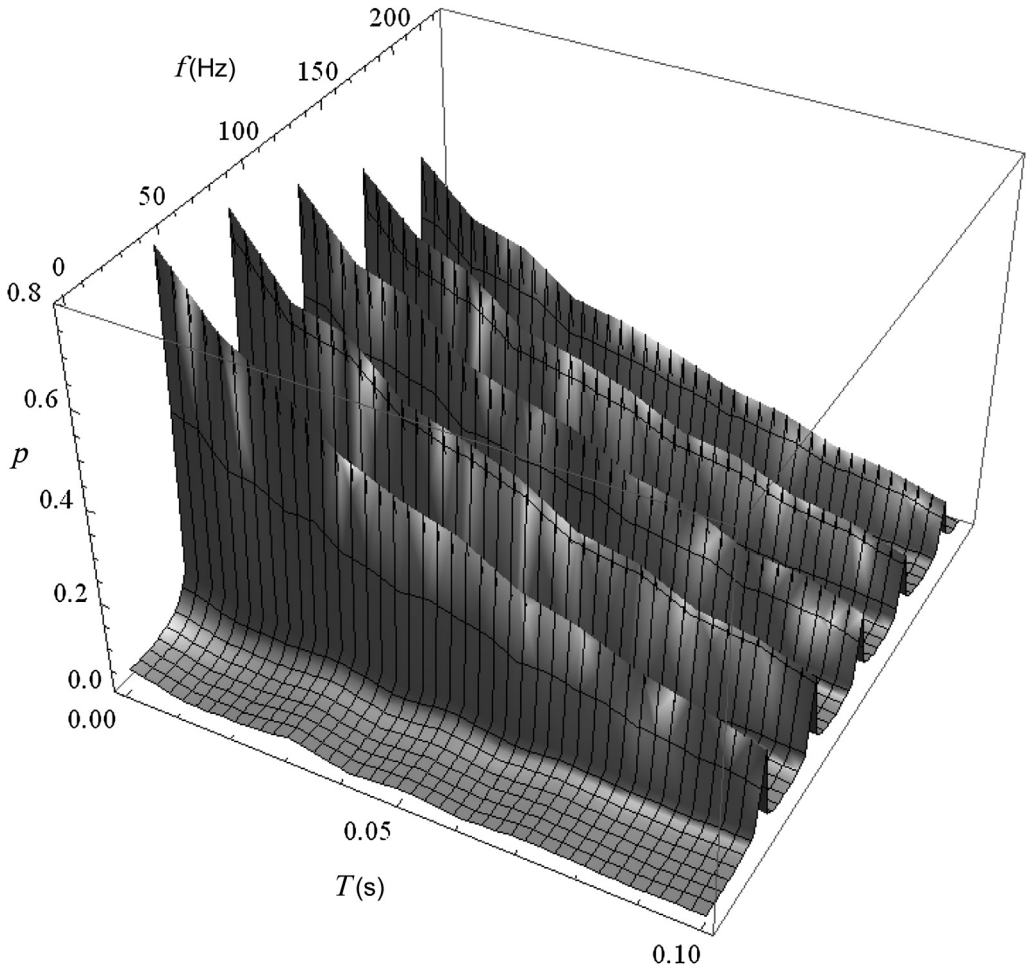

FIG. 10.10 Waterfall plot of sound-pressure decay in a tube in which $l = 3.5$ m, $R_f = 10$ rayls/m, $\delta t = 0.5$ s, and the first five modes are summed in the calculation.

The 0th mode is ignored because it simply gives a constant change in pressure.

own normal frequency, and its own damping constant. The damping constant determines the maximum height and the width of the steady-state sound-pressure resonance curve.

In addition, when the source of sound is turned off, the sound pressure associated with each mode of vibration decays exponentially with its own normal frequency and at a rate determined by its damping constant. The room is thus an assemblage of resonators that act independently of each other when the sound source is turned off. The larger the room and the higher the frequency, the nearer together will be the normal frequencies and the larger will be the number of modes of vibration excited by a single-frequency source or by a source with a narrow band of frequencies.

10.5 EXAMPLES OF RECTANGULAR ENCLOSURES

Example 10.1. Determine the normal frequencies and directional cosines for the lowest six normal modes of vibration in a room with dimensions 5 by 4 by 3 m.

Solution. From Eq. (10.5) we see that

$$f_{1,0,0} = 348.8/_2 \times 1/_5 = 34.9 \text{ Hz}$$

$$f_{0,1,0} = 348.8/_2 \times 1/_4 = 40.4 \text{ Hz}$$

$$f_{1,1,0} = 348.8/_2 \sqrt{1/_{25} + 1/_{16}} = 55.8 \text{ Hz}$$

$$f_{2,0,0} = 348.8/_2 \times 2/_5 = 69.8 \text{ Hz}$$

$$f_{2,1,0} = 348.8/_2 \sqrt{4/_{25} + 1/_{16}} = 82.3 \text{ Hz}$$

$$f_{0,0,1} = 348.8/_2 \times 1/_3 = 58.1 \text{ Hz}$$

From Eqs. (10.8) to (10.10) we find the direction cosines for the various modes as follows:

$$\begin{aligned}
(1,0,0) \text{ mode}: \quad & \theta_x = 0; \quad \theta_y = 90°; \quad \theta_z = 90° \\
(0,1,0) \text{ mode}: \quad & \theta_x = 90°; \quad \theta_y = 0°; \quad \theta_z = 90° \\
(1,1,0) \text{ mode}: \quad & \theta_x = \arccos \frac{348.8}{2 \times 5 \times 55.8} = 51.3° \\
& \theta_y = \arccos \frac{348.8}{2 \times 4 \times 55.8} = 38.6° \\
& \theta_z = 90° \\
(2,0,0) \text{ mode}: \quad & \theta_x = 0; \quad \theta_y = 90°; \quad \theta_z = 90° \\
(2,1,0) \text{ mode}: \quad & \theta_x = \arccos \frac{2 \times 348.8}{2 \times 5 \times 82.3} = 32.1° \\
& \theta_y = \arccos \frac{348.8}{2 \times 4 \times 82.3} = 58.0° \\
& \theta_z = 90° \\
(0,0,1) \text{ mode}: \quad & \theta_x = 90°; \ \theta_y = 90°; \ \theta_z = 0°
\end{aligned}$$

Example 10.2. A rectangular room with dimensions $l_x = 3$ m, $l_y = 4$ m, and $l_z = 5$ m is excited by a sound source located in one corner of the room. The sound pressure level developed is measured at another corner of the room. The sound source produces a continuous band of frequencies between 450 and 550 Hz, with a uniform spectrum level, and a total acoustic-power output of 1 watt. When the sound source is turned off, a linear decay curve (log p vs. t) is obtained which has a slope of 30 dB/s. (*a*) Determine graphically the number of normal modes of vibration excited by the source; (*b*) determine the approximate angle of incidence of the traveling-wave field involving the walls at $x = 0$

and $x = l_x$ in each of the principal groupings of normal frequencies shown in the graphical construction.

Solution. (*a*). A graphical solution to Eq. (10.5) is given in Fig. 10.11. The frequency of any given normal mode of vibration is the distance from the origin of coordinates to one of the black spheres shown. That frequency will be made up of three components given by $cn_x/2l_x$, $cn_y/2l_y$, and $cn_z/2l_z$. Notice that along the vertical coordinate the normal frequencies occur in increments of $348.8/6$; along the right-hand axis in increments of $348.8/8$ and along the remaining axis

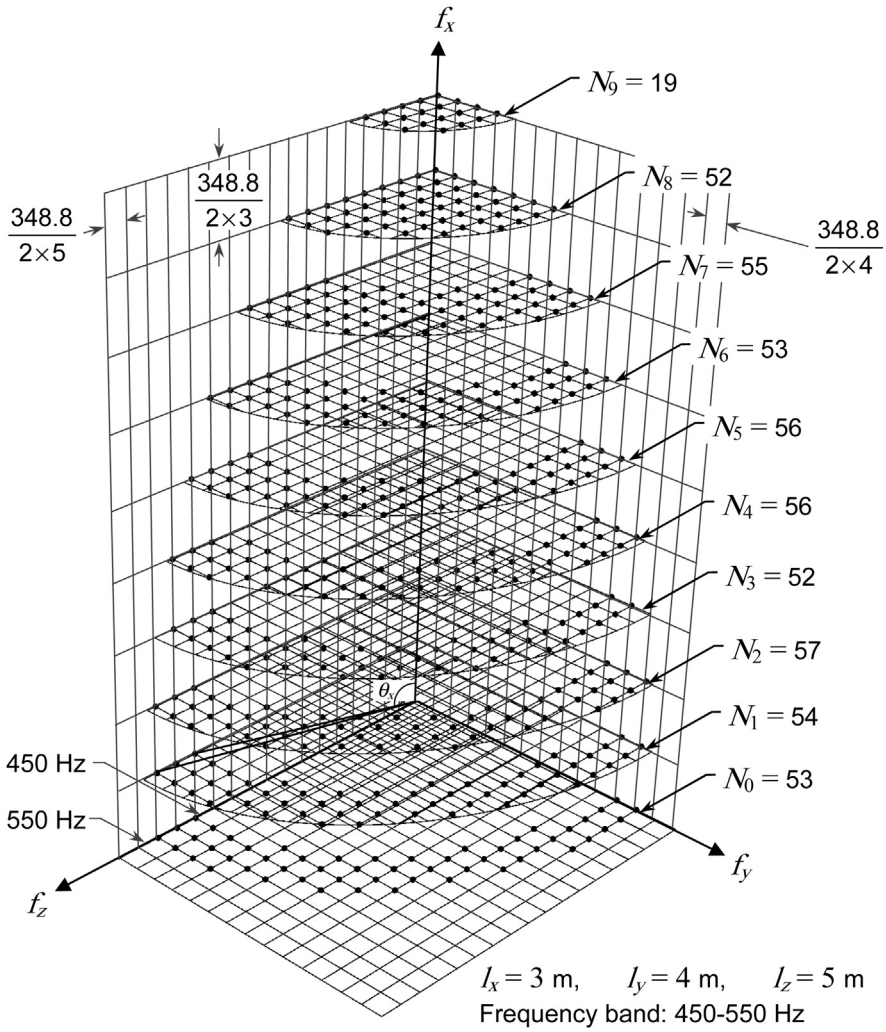

FIG. 10.11 Normal frequency diagram, drawn to scale for a 3 by 4 by 5 m rectangular room with hard walls.

Most of the vertical lines are omitted to avoid confusion.

After Hunt, Beranek, and Maa, [14] Analysis of Sound Decay in Rectangular Rooms, J. Acoust. Soc. Am., ***11:*** *80–94 (1939).*

in increments of $348.8/_{10}$. On the layer labeled N_0, there are 53 normal frequencies. The total number of normal frequencies between 450 and 550 Hz for this room is 507. The average frequency is 500 Hz.

Solution. b. The θ_x angles of incidence can be divided into ten principal groups as shown in Fig. 10.11. The angles are as follows:

$$\theta_x(0, n_y, n_z) \approx 90^\circ$$
$$\theta_x(1, n_y, n_z) \approx \cos^{-1}\left(345/_6 \cdot 1/_{500}\right) \approx 83^\circ$$
$$\theta_x(2, n_y, n_z) \approx \cos^{-1}\left(\frac{2.345}{6.500}\right) \approx 77^\circ$$
$$\theta_x(3, n_y, n_z) \approx \cos^{-1}(0.345) \approx 70^\circ$$
$$\theta_x(4, n_y, n_z) \approx \cos^{-1}(0.46) \approx 63^\circ$$
$$\theta_x(5, n_y, n_z) \approx \cos^{-1}(0.575) \approx 55^\circ$$
$$\theta_x(6, n_y, n_z) \approx \cos^{-1}(0.69) \approx 46^\circ$$
$$\theta_x(7, n_y, n_z) \approx \cos^{-1}(0.805) \approx 36^\circ$$
$$\theta_x(8, n_y, n_z) \approx \cos^{-1}(0.92) \approx 23^\circ$$
$$\theta_x(9, n_y, n_z) \approx \cos^{-1}(0.995) \approx 6^\circ$$

PART XXXI: SOUND IN LARGE ENCLOSURES

10.6 BASIC MATTERS

When a sound source, having components that extend over a band of frequencies, radiates sound into a large irregular enclosure, a microphone that is moved about will experience fluctuations in sound pressure. The maxima and minima of these fluctuations will lie much closer together in such an enclosure than in a small or regular enclosure because there are a large number of room resonances in all bands except for the very lowest frequency bands. Thus, in these enclosures, the mean-square sound pressure can be determined by moving the microphone back and forth over a short distance. The sound field is largely a superposition of plane waves traveling in all directions with equal probability. This condition is called a *diffuse sound field.* In order to avoid the influence of the direct sound, this condition is experienced at a reasonable distance from the source.

The number of reflections from surfaces in such a room per second is equal to c/d where d is the *mean free path of the wave and c is the speed of sound.* By actual measurements in rooms of varying shapes and sizes it has been found that mean free path is equal to

$$d = \frac{4V}{S} \text{ m} \tag{10.43}$$

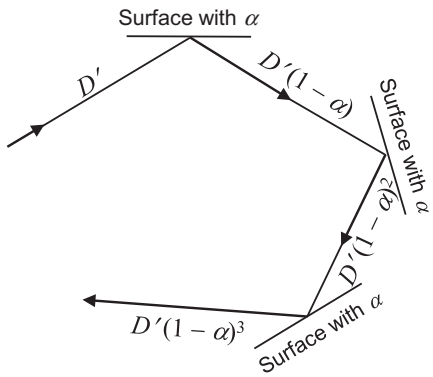

FIG. 10.12 Path of a sound wave with energy density D' as it travels distances of $4V/S$ and reflects off surfaces with average absorption coefficient α.

where V is the volume of the room in m^3 and S is the total area of the surfaces of the room in m^2. If, after establishing a steady-state sound field, the source of sound is turned off, the sound energy stored in the enclosure will decrease with each reflection (See Fig. 10.12) according to

$$D(n) = D'(1-\alpha)^n \tag{10.44}$$

where D' is the steady-state energy density before the source was turned off, n is the number of reflections that have occurred, and α is the sound absorption coefficient, which is taken to be averaged for all angles of incidence. By replacing n with $ct/d = (cS/4V)t$ the decay formula is

$$D(t) = D'(1-\alpha)^{(cs/4V)t} = D'e^{-(cs/4V)(-\ln(1-\alpha))t} \tag{10.45}$$

where ln is the logarithm to the base e. In a reverberant sound field, the energy density is proportional to the mean-square sound pressure. Hence

$$p_{av}^2(t) = p_{av}^2(0)e^{-(cs/4V)(-\ln(1-\alpha))t} \tag{10.46}$$

Because $10\log_{10}$ of the exponential function equals

$$10(cS/4V)(\log_{10}(1-\alpha))t,$$

where we have used the relationship $\log_{10} x = \log_{10} e \cdot \ln x$, the sound pressure level decays at the rate of

$$-\frac{10\,cS}{4V}\log_{10}(1-\alpha)\ \mathrm{dB/s} \tag{10.47}$$

10.7 THE REVERBERATION EQUATIONS

The reverberation time of the enclosure is defined as the time required for the sound pressure level to fall 60 dB. Thus, the well-known **Eyring equation** [2], which gives the reverberation time T for an

energy drop of 60 dB, is obtained from Eq. (10.47), with $S = S_{tot} = \sum S_i$, where S_i's are areas of particular surfaces in the room, such as audience area and ceiling area:

$$T = \frac{24V}{-cS_{tot}\log_{10}(1-\alpha_{ey})}\ \text{s} \tag{10.48}$$

where, V = volume of room in m^3, S_{tot} = area of all surfaces in the room, and α_{ey} is the average sound absorption coefficient for the surfaces S_i as shown in Fig. 10.12. The Eyring equation is usually presented with either the natural logarithm or $\log_{10}$ in the denominator and with c taken as 343.5 m/s at 20°C so that

$$T = \frac{0.161V}{S_{tot}\big(-\ln(1-\alpha_{ey})\big)} = \frac{0.161V}{S_{tot}\big(-2.30\log_{10}(1-\alpha_{ey})\big)}\text{s} \tag{10.49}$$

Note that if the surfaces are perfectly absorbing, i.e., $\alpha_{ey} = 1.0$, the reverberation time T goes to zero.

The **Sabine equation** [3] was derived by Wallace Sabine from measurements he made in a number of rooms at Harvard University:

$$T = \frac{0.161V}{S_{tot}\alpha_{tot}}\ \text{s (metric units)} \tag{10.50}$$

$$T = \frac{0.049V}{S_{tot}\alpha_{tot}}\ \text{s (English units)} \tag{10.51}$$

Note that, in the Sabine equation, T only goes to zero if α_{tot} approaches infinity. Even today, most published data on acoustical materials and the absorption of audiences and the like have been obtained using the Sabine equation, partly because the formula is simpler to use and partly because for α_{ey} less than 0.26, α_{tot} is decreasingly less than 0.3.

It is possible to derive the absorption coefficients in one equation from the absorption coefficients in the other equation [4]. In the Sabine equation, let

$$\alpha_{tot} = \frac{\sum \alpha_{s,i}S_i}{S_{tot}} \tag{10.52}$$

where, $\alpha_{s,i}$ is the Sabine absorption coefficient for a particular area S_i, and $S_{tot} = \Sigma S_i$.

In the Eyring equation, let

$$\alpha_{ey} = \frac{\sum \alpha_{e,i}S_i}{S_{tot}} \tag{10.53}$$

where $\alpha_{e,i}$ is the Eyring absorption coefficient for a particular area S_i.

Then, we find

$$\frac{\alpha_{ey}}{\alpha_{tot}} = \frac{\sum \alpha_{e,i}S_i}{\sum \alpha_{s,i}S_i} \tag{10.54}$$

Hence

$$\alpha_{e,i} = (\alpha_{ey}/\alpha_{tot})\alpha_{s,i}. \tag{10.55}$$

Table 10.1 Measured values of air attenuation constant m (multiplied by 4) in m^{-1} as a function of frequency, temperature, and relative humidity

Relative humidity	Temperature °C (°F)	2000 Hz	4000 Hz	6300 Hz	8000 Hz
30%	15° (59°)	0.0147	0.0519	0.1144	0.1671
	20° (68°)	0.0122	0.0411	0.0937	0.1431
	25° (77°)	0.0111	0.0335	0.0759	0.1178
	30° (86°)	0.0114	0.0292	0.0633	0.0975
50%	15° (59°)	0.0096	0.0309	0.0712	0.1102
	20° (68°)	0.0092	0.0258	0.0577	0.0896
	25° (77°)	0.0101	0.0234	0.0489	0.0748
	30° (86°)	0.0119	0.0234	0.0443	0.0655
70%	15° (59°)	0.0081	0.0231	0.0519	0.0808
	20° (68°)	0.0088	0.0208	0.0437	0.0671
	25° (77°)	0.0105	0.0208	0.0396	0.0586
	30° (86°)	0.0131	0.0231	0.0391	0.0548

10.8 AIR ABSORPTION

As a sound wave travels from one reflection to another in a room, some energy is lost in the air itself. Such absorption in all but very large rooms is appreciable only at frequencies above 1000 Hz. When the reverberation equations are corrected to account for air absorption, they read as follows.

Eyring Equation, metric units:

$$T = \frac{0.161V}{S_{tot}\big(-\ln(1-\alpha_{ey})\big) + 4mV} = \frac{0.161V}{S_{tot}\big(-2.30\log_{10}(1-\alpha_{ey})\big) + 4mV}. \tag{10.56}$$

Sabine Equation, metric units:

$$T = \frac{0.161T}{S_{tot}\alpha_{tot} + 4mV}, \tag{10.57}$$

where m is the energy attenuation constant in units of reciprocal length. Measured values of $4m$ under some typical atmosphere conditions are shown in Table 10.1.

10.9 TOTAL STEADY SOUND-PRESSURE LEVEL

We are now in a position to incorporate the direct sound field from a source into the energy equations and calculate the total steady-state sound pressure level.

Direct steady-state sound pressure. The space-average sound pressure in a room (determined by moving a microphone back and forth over at least one wavelength) at a distance r from a small directional source radiating W watts is

$$p^2(r) = \frac{\rho_0 c W}{4\pi r^2} Q \, \mathrm{N}^2/\mathrm{m}^4, \tag{10.58}$$

where Q is the directivity index (not in decibels) (see Sec. 4.16).

Reverberant steady-state sound pressure. The sound power absorbed by the first reflection is $W\alpha$, hence the power remaining for the reverberant field is $W_r = W(1-\alpha)$. Let t' be the length of time it takes for the sound to travel one mean-free-path length:

$$t' = \frac{4V}{cS} \text{ s}. \tag{10.59}$$

Let the steady-state value of the reverberant energy density be D_r'. Then, the total energy per second removed from the room is

$$\frac{D_r' V \alpha}{t'} = W_r, \tag{10.60}$$

which yields, where $p_r^2 = D_r' \rho_0 c^2$,

$$p_r^2 = \frac{4\rho_0 c W}{S\alpha}(1-\alpha) \, \mathrm{N}^2/\mathrm{m}^4. \tag{10.61}$$

Total steady-state sound pressure. Combining Eqs. (10.58) and (10.61) yields

$$p^2(r) = W\rho_0 c \left[\frac{Q}{4\pi r^2} + \frac{4(1-\alpha)}{S\alpha}\right] \mathrm{N}^2/\mathrm{m}^4, \tag{10.62}$$

The restrictions on this equation are that α not be too large and the mean free path is about $4V/S$. The absorption coefficient α is the Eyring coefficient.

10.10 OPTIMUM REVERBERATION TIME

The following formula [5–10] gives the average optimum reverberation time T for a given auditorium volume V based on subjective results:

$$\log_{10} V = 5.72 + \log_{10} T - \frac{2.43}{\sqrt{T}}, \tag{10.63}$$

which is solved numerically for T and plotted in Fig. 10.13.

10.11 SOUND STRENGTH *G*

It is now customary in auditorium acoustics to express Eq. (10.61) in terms of Sound Strength G [11]. Sound Strength G, in decibels, is the ratio of the sound energy that comes from

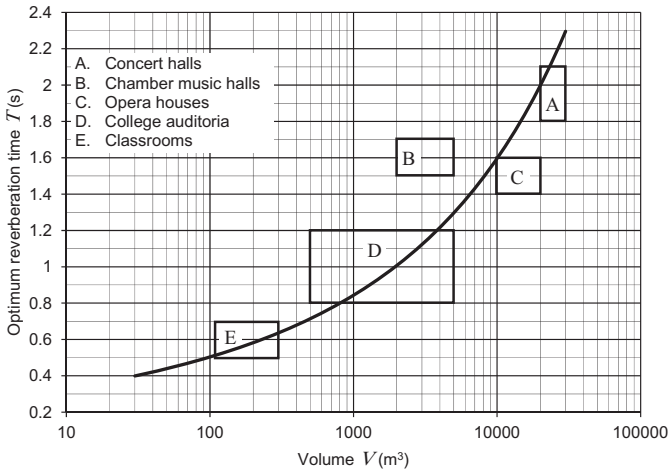

FIG. 10.13 Optimum reverberation *T* versus auditorium volume *V*.

a nondirectional source ($Q = 1$) measured at a distance r in the auditorium, to the same sound energy from the same source but measured in an anechoic chamber at $r = 10$ m. Thus, the reference sound pressure is

$$p_{ref}^2 = \frac{W\rho_0 c}{4\pi * 100} \tag{10.64}$$

Division of Eq. (10.62) by (10.64) and taking 10 log to get decibels, yields the Sound Strength G:

$$G = 10\log_{10}\left(\frac{100}{r^2} + \frac{1600\pi(1-\alpha_{tot})}{S_{tot}\alpha_{tot}}\right) \text{dB}. \tag{10.65}$$

The reason α_{tot} is used here instead of α_{ey} is because it has been found that if RT is measured in an actual hall and if $S\alpha$ is determined from the Sabine formula ($\text{RT} = 0.016V/S\alpha_{tot}$) and this value for $S\alpha$ is used in the G equation to calculate G, the calculated G equals the actual measured values of G in the hall very closely (when using the reverberation method of calibrating the standard dodecahedral source) (see Fig. 10.14). If the Eyring equation is used, this means that the $[-2.30\log(1-\alpha_{ey})]$ must be used and not just α_{ey}, to calculate G. If α_{ey} is used, the calculated G will be about 2.5 dB higher than the measured G.

The second term in Eq. (10.65) would seem to indicate that the reverberant sound field is uniform in an auditorium, but sound pressure levels measure larger in the front part of an auditorium than toward the rear (see next section). This term actually indicates the average of the sound pressure levels determined from measurements at a large number of positions in the auditorium (with r large enough that the first term does not appreciably influence the second).

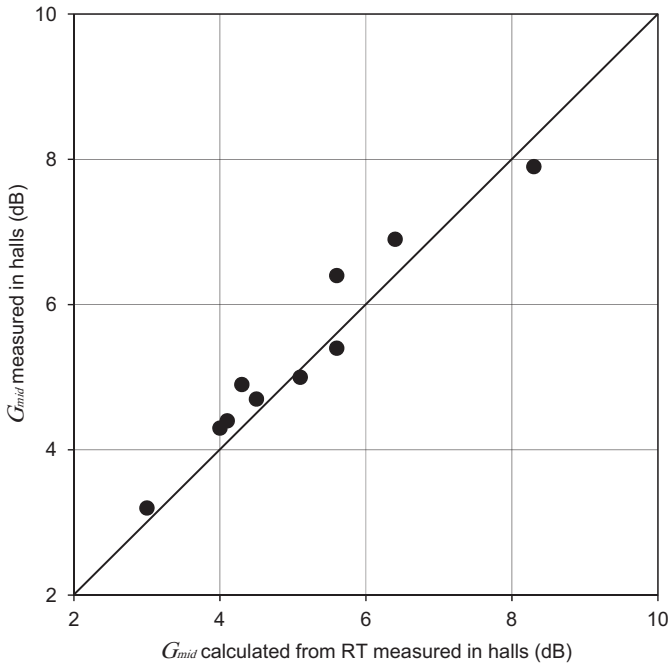

FIG. 10.14 Values of *G* at middle frequencies measured in 10 concert halls (4 shoebox shaped, 4 surround, and 2 fan shaped) versus G_{mid} calculated from measurements of RT in these halls.

10.12 EARLY AND REVERBERANT SOUND IN CONCERT HALLS

It can be shown that the second term of Eq. (10.65) may be divided into two parts, one for early sound (that arriving within 80 ms of the direct sound) and the other for late (reverberant) sound (after 80 ms), both varying with distance r [12]. These equations are

$$E_{early} = \frac{31200T}{V} e^{-0.04r/T} \left(1 - e^{-1.11/T}\right), \tag{10.66}$$

$$E_{reverberant} = \frac{31200T}{V} e^{-0.04r/T} \left(e^{-1.11/T}\right). \tag{10.67}$$

As an example, these equations, with $V = 20{,}000\ \mathrm{m}^3$ and $T = 2$ s, are plotted in Fig. 10.15. Zero on the ordinate is set for the direct sound with $r = 10$ m. For r between 10 and 40 m, the top curve predicts the difference in G(total) to be 3.8 dB. Measurements made in nine shoebox-shaped halls, with average $V = 16{,}500\ \mathrm{m}^3$ and $T = 2.5$ s, found that for r between 10 and 40 m, G(total) drops about 2 dB, while in eleven surround halls, with average $V = 23{,}000\ \mathrm{m}^3$ and $T = 2.2$ s, it drops by about 5 dB. The quantity of 3.8 dB above for $V = 20{,}000\ \mathrm{m}^3$ and $T = 2$ s is correctly between these two numbers. Also, measurements show that the levels drop off faster if the reverberation times are less than about

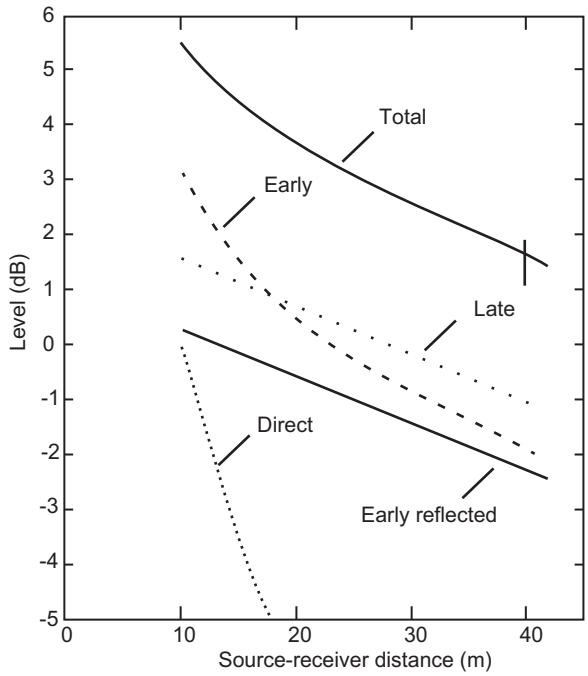

FIG. 10.15 Calculation of the component values of G with $V = 20{,}000$ m^3 and $T = 2$ s.

The reference sound pressure level at 10 m distance is 0 dB. "Total" at top is the sum of "Direct", "Early Reflected" and "Late". "Early" is the sum of "Direct" and "Early Reflected". "Early reflected" is from Eq. (10.66) and "Late" is from Eq. (10.67).

From Barron [12].

1.5 s—the drop-off rate significantly increasing (nearer the drop in direct sound level) as RT's become less than 0.7 s.

10.13 DISTANCE FOR EQUALITY OF DIRECT AND REVERBERANT SOUND FIELDS

We will define the distance r_{rev} at which the reverberant field takes over as the distance at which the direct and reverberant fields are equal. Hence

$$r_{rev} = \frac{1}{4}\sqrt{\frac{QS_{tot}\alpha_{tot}}{\pi(1-\alpha_{tot})}}. \tag{10.68}$$

The total absorbent area S_{tot} and absorption coefficient α_{tot} are both related to the volume of the auditorium. On average [7]

$$S_{tot} = 2.2V^{2/3}. \tag{10.69}$$

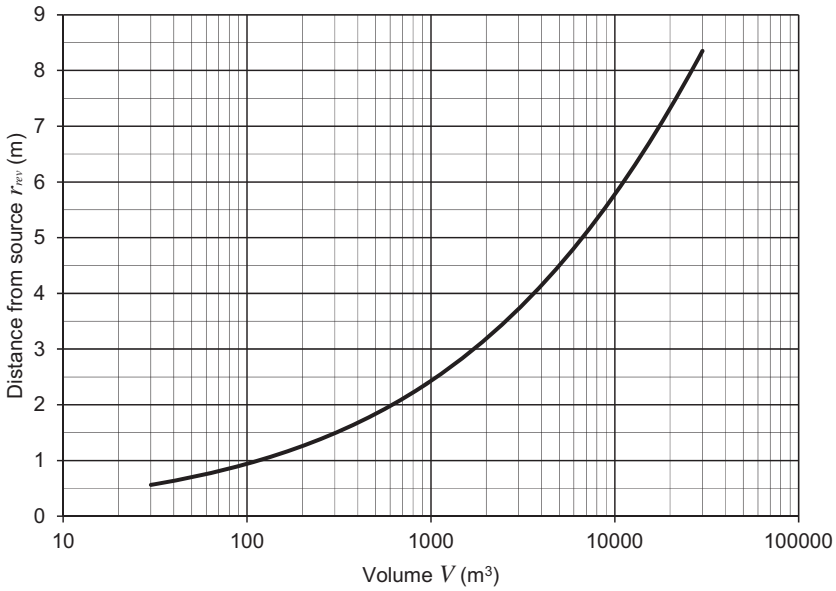

FIG. 10.16 Distance r_{rev} from an omnidirectional source, at which the reverberant sound is equal to the direct sound, versus auditorium volume V. Optimum reverberation time T is assumed (see Fig. 10.13).

Let us also assume the reverberation time is the optimum value given by Eq. (10.63) and plotted in Fig. 10.13, and that we have a point source with $Q = 1$. From Eq. (10.48),

$$\alpha_{ey} = 1 - 10^{-24V/(cs_{tot}T)}. \tag{10.70}$$

We can now deduce the distance r_{rev}, which is shown in Fig. 10.16.

We note that r_{rev} will be greater for sources which are more directional than a point source ($Q > 1$). It is common to use directional loudspeakers such as horns or column arrays in more reverberant spaces where satisfactory speech intelligibility is needed. The reference distance is generally taken as 10 m which is valid for even the larger concert halls.

10.14 SOUND LEVELS FOR SPEECH AND MUSIC

When designing a sound system for a specific auditorium, we need to know how much sound pressure is required to produce realistic volumes for music or speech or both. The second column of Table 10.2 shows the maximum peak SPL at 10 m from various sources. However, conversational speech at such a distance is too quiet so the third column gives an SPL value adjusted for a distance of 1 m, which is more natural. The orchestra is adjusted for a distance of 3 m, which represents a good seat a few rows back from the stage. For speech the crest factor (the difference between the maximum peak SPL and average rms SPL) is about 13 dB. For music it is about 20 dB.

Table 10.2 Maximum peak sound pressure levels due to various sound sources [16]

Sound source	Maximum peak SPL (dB) at 10 m from source	Maximum peak SPL (dB) adjusted for 1 m (conversational speech) and 3 m (others)
Conversational speech [17]	56	76
Declamatory speech [17]	67.5	78
Large orchestra [18]	92	102.5

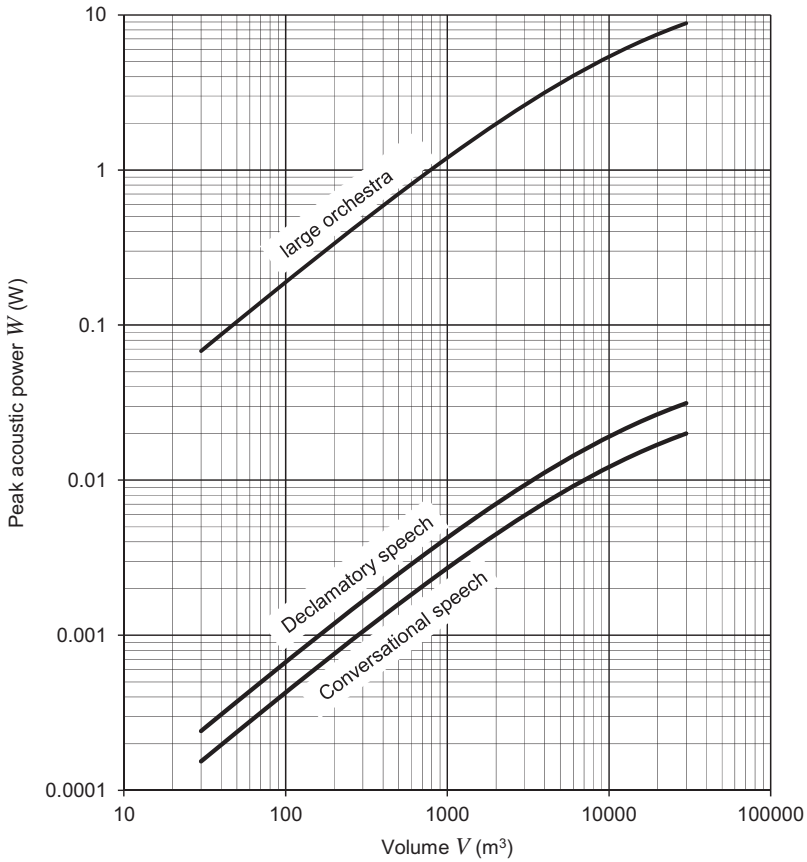

FIG. 10.17 Peak acoustic power *W* versus auditorium volume *V* for various sound sources. Optimum reverberation time *T* is assumed (see Fig. 10.13). The maximum peak sound pressure levels are given in Table 10.2.

Knowing the required pressure from the third column of Table 10.2, S_{tot} from Eq. (10.69), and α_{ey} from Eq. (10.70), we can evaluate the acoustic power required [13] from Eq. (10.62) as follows:

$$W = \frac{4 \times 10^{(SPL/10)-10}}{\rho_0 c}\left(\frac{Q}{4\pi r_{ref}^2} + \frac{4(1-\alpha_{ey})}{S_{tot}\alpha_{ey}}\right)^{-1}, \tag{10.71}$$

where $r_{ref} = 10$ m and the SPL value is taken from the third column of Table 10.2. The maximum peak acoustic power is plotted against auditorium volumes in Fig. 10.17. Of course, the required amplifier output power will depend upon the choice of loudspeaker. For example, a living room with a volume of 60 m^3 will require a stereo amplifier with a power rating of 6 W per channel to reproduce a large orchestra if the loudspeakers have an efficiency of 1%. If loudspeakers with an efficiency of 10% can be employed, the power rating of the amplifier can be reduced to 0.6 W per channel.

References

[1] Beranek LL. Acoustic Measurements. New York: John Wiley & Sons, Inc; 1949:329–36.
[2] Eyring CF. Reverberation Time in Dead Rooms. J Acoust Soc Am 1929;1:217–41.
[3] Sabine WC. Collected Papers on Acoustics. Cambridge, MA: Harvard University Press; 1922.
[4] Beranek LL. Analysis of Sabine and Eyring Equations and Their Application to Concert Hall Audience and Chair Absorption. J Acoust Soc Am 2006;120:1399–410.
[5] MacNair WA. Optimum Reverberation Time for Auditoriums. J Acoust Soc Am 1930;1(1):242–8.
[6] Lifshitz S. Acoustics of Large Auditoriums. J Acoust Soc Am 1932;4:112--21.
[7] Beranek L. Springer: Concert Halls and Opera Houses; 2004.
[8] Hidaka T, Nishihara N. Chamber Music Halls in Europe and Japan. J Acoust Soc Am 2004;116(1):357–72.
[9] Amer. Nat'l. Standard (ANSI-S12.60). Design Requirements and Guidelines for Schools, 2010.
[10] Beranek LL. Acoustics. McGraw-Hill; 1954. p. 425, Fig. 13.25. The material here is from the literature and from the experience of Bolt, Beranek and Newman, consultants in acoustics.
[11] Beranek LL. The Sound Strength Parameter *G* and its Importance in Evaluating and Planning the Acoustics of Halls for Music. J Acoust Soc Am 2011;129(5):3020–6.
[12] Barron M, Lee LJ. Energy Relations in Concert Auditoriums. J Acoust Soc Am 1988;84(2):618–28.
[13] Hopkins HF, Stryker NR. A Proposed Loudness-Efficiency Rating for Loudspeakers and the Determination of System Power Requirements for Enclosures. Proc. IRE 1948;36:315–35. Modified with more recent data.
[14] Hunt FV, Beranek LL, Maa DY. Analysis of Sound Decay in Rectangular Rooms. J Acoust Soc Am 1939;11:80–94.
[15] Barron M. Auditorium Acoustics and Architectural Design. Spon Press; 2010.
[16] Fletcher H. Hearing, the determining factor for high-fidelity transmission. Proc.. I.R.E. 1942;20:266–77.
[17] Beranek LL. The design of speech communication systems. Proc.. I.R.E. 1947;35:880–90.
[18] Hidaka T. Nishihara N., From unpublished data relating to Suntory Hall, Tokyo, which has $V = 21000$ m^3, $S_{tot} = 6674$ m^2, and $T = 2$ s. Hence $a_{ey} = 0.221$. Although readings were taken at 34 m, similar levels can be expected at 10 m because it is still beyond the r_{eq} distance of 7.5 m.