US008287341B1

(12) **United States Patent**
Reynolds et al.

(10) **Patent No.: US 8,287,341 B1**
(45) **Date of Patent: *Oct. 16, 2012**

(54) **ASYNCHRONOUS INTERACTIVE GAME PLAY**

(75) Inventors: **Robert Brian Reynolds**, Lutherville, MD (US); **Aaron Paul Foster**, Towson, MD (US); **Daniel Edward Halka**, Baltimore, MD (US); **Douglas Francis Kaufman**, Whitehall, MD (US); **Paul Eugene Stephanouk**, Stewartstown, PA (US)

(73) Assignee: **Zynga Inc.**, San Francisco, CA (US)

(*) Notice: Subject to any disclaimer, the term of this patent is extended or adjusted under 35 U.S.C. 154(b) by 13 days.

This patent is subject to a terminal disclaimer.

(21) Appl. No.: **12/904,722**

(22) Filed: **Oct. 14, 2010**

(51) **Int. Cl.**
G06F 17/00 (2006.01)

(52) **U.S. Cl.** **463/9**; 463/40

(58) **Field of Classification Search** 463/42, 463/40, 9–14

See application file for complete search history.

(56) **References Cited**

U.S. PATENT DOCUMENTS

2007/0265043 A1* 11/2007 Wang et al. 463/2
2008/0176655 A1* 7/2008 James et al. 463/42
2010/0004055 A1* 1/2010 Gormley et al. 463/25
2010/0160038 A1* 6/2010 Youm et al. 463/29
2010/0197410 A1* 8/2010 Leen et al. 463/42
2011/0053688 A1* 3/2011 Crawford et al. 463/31
2011/0107239 A1* 5/2011 Adoni et al. 715/757
2011/0165945 A1* 7/2011 Dickins 463/42
2011/0212783 A1* 9/2011 Dale et al. 463/42
2011/0223996 A1* 9/2011 Yerli et al. 463/36
2011/0281638 A1* 11/2011 Bansi et al. 463/23
2012/0094751 A1 4/2012 Reynolds et al.
2012/0094755 A1 4/2012 Reynolds et al.
2012/0094765 A1 4/2012 Reynolds et al.
2012/0094766 A1 4/2012 Reynolds et al.

FOREIGN PATENT DOCUMENTS

WO WO2010093831 * 8/2010

OTHER PUBLICATIONS

Havas Interactive UK Ltd., Warcraft II, Battle.net Edition, 1999, Blizzard Entertainment, pp. 4-23.*
U.S. Appl. No. 13/244,779, Examiner Interview Summary mailed Mar. 6, 2012, 3 pgs.
U.S. Appl. No. 13/244,779, Non Final Office Action mailed Dec. 27, 2011, 11 pgs.
U.S. Appl. No. 13/244,791, Examiner Interview Summary mailed Feb. 17, 2012, 3 pgs.
U.S. Appl. No. 13/244,791, Non Final Office Action mailed Dec. 27, 2011, 12 pgs.
U.S. Appl. No. 13/244,798, Non Final Office Action mailed Mar. 21, 2012, 11 pgs.
U.S. Appl. No. 13/244,807, Examiner Interview Summary mailed Mar. 1, 2012, 3 pgs.
U.S. Appl. No. 13/244,807, Non Final Office Action mailed Dec. 27, 2011, 12 pgs.
U.S. Appl. No. 13/244,779, Final Office Action mailed Apr. 13, 2012, 11 pgs.

(Continued)

Primary Examiner — Michael Cuff
(74) *Attorney, Agent, or Firm* — Schwegman, Lundberg & Woessner, P.A.

(57) **ABSTRACT**

This disclosure generally relates to systems and methods for executing asynchronous game play by a plurality of players in one or more game instances.

20 Claims, 8 Drawing Sheets

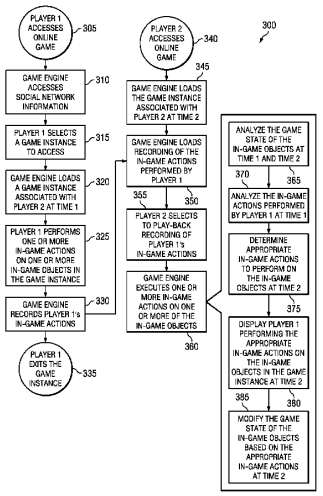

OTHER PUBLICATIONS

U.S. Appl. No. 13/244,779, Non Final Office Action Response filed Mar. 23, 2012 response to Non Final Office Action mailed Dec. 27, 2012, 9 pgs.
U.S. Appl. No. 13/244,791, Final Office Action mailed Apr. 16, 2012, 12 pgs.
U.S. Appl. No. 13/244,791, Non Final Office Action Response filed Mar. 23, 2012 response to Non Final Office Action mailed Dec. 27, 2012, 9 pgs.
U.S. Appl. No. 13/244,798, Response filed Jun. 21, 2012 to Non Final Office Action mailed Mar. 21, 2012, 11 pgs.
U.S. Appl. No. 13/244,807, Final Office Action mailed Apr. 16, 2012, 12 pgs.
U.S. Appl. No. 13/244,807, Non Final Office Action Response filed Mar. 23, 2012 response to Non Final Office Action mailed Dec. 27, 2011, 13 pgs.

* cited by examiner

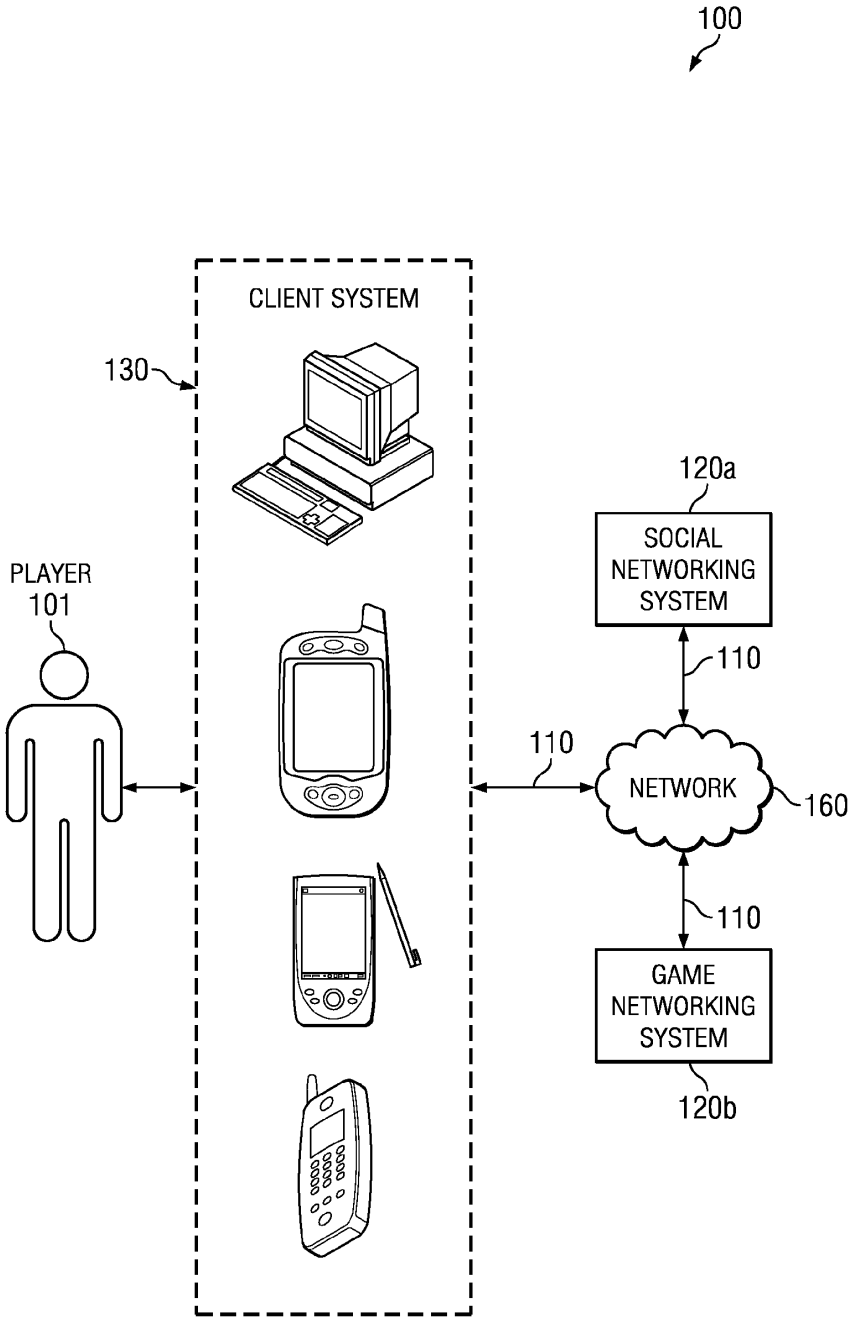
100
CLIENT SYSTEM
130
PLAYER
101
120a
SOCIAL
NETWORKING
SYSTEM
110
110
NETWORK
160
110
GAME
NETWORKING
SYSTEM
120b

FIG. 1

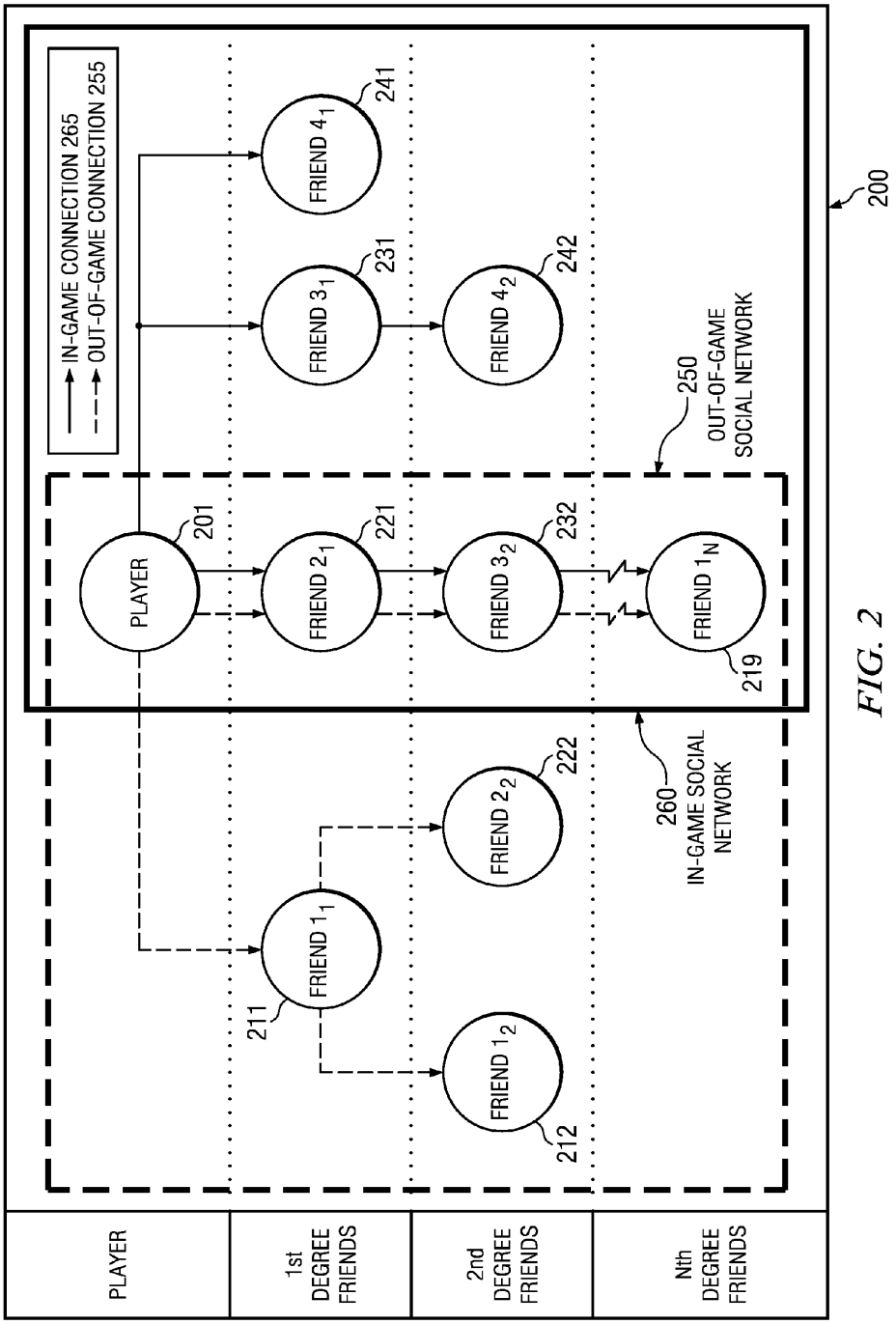
IN-GAME CONNECTION 265
OUT-OF-GAME CONNECTION 255
PLAYER
1st DEGREE FRIENDS
2nd DEGREE FRIENDS
Nth DEGREE FRIENDS
PLAYER
201
FRIEND 1 1
211
FRIEND 1 2
212
FRIEND 2 1
221
FRIEND 2 2
222
FRIEND 3 1
231
FRIEND 3 2
232
FRIEND 4 1
241
FRIEND 4 2
242
FRIEND 1 N
219
260
IN-GAME SOCIAL NETWORK
250
OUT-OF-GAME SOCIAL NETWORK
200

FIG. 2

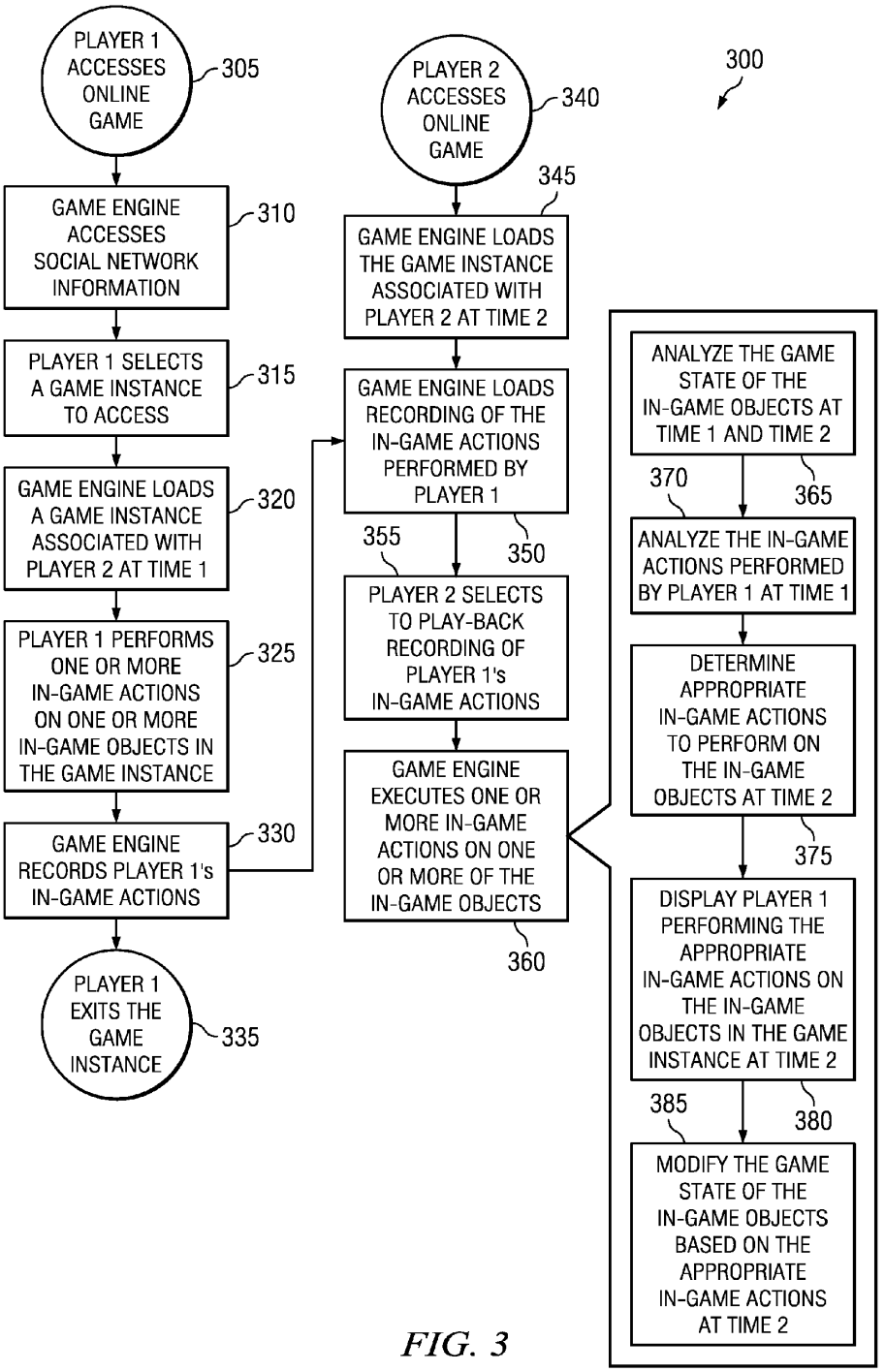
300
PLAYER 1 ACCESSES ONLINE GAME
305
GAME ENGINE ACCESSES SOCIAL NETWORK INFORMATION
310
PLAYER 1 SELECTS A GAME INSTANCE TO ACCESS
315
GAME ENGINE LOADS A GAME INSTANCE ASSOCIATED WITH PLAYER 2 AT TIME 1
320
PLAYER 1 PERFORMS ONE OR MORE IN-GAME ACTIONS ON ONE OR MORE IN-GAME OBJECTS IN THE GAME INSTANCE
325
GAME ENGINE RECORDS PLAYER 1's IN-GAME ACTIONS
330
PLAYER 1 EXITS THE GAME INSTANCE
335
PLAYER 2 ACCESSES ONLINE GAME
340
GAME ENGINE LOADS THE GAME INSTANCE ASSOCIATED WITH PLAYER 2 AT TIME 2
345
GAME ENGINE LOADS RECORDING OF THE IN-GAME ACTIONS PERFORMED BY PLAYER 1
350
PLAYER 2 SELECTS TO PLAY-BACK RECORDING OF PLAYER 1's IN-GAME ACTIONS
355
GAME ENGINE EXECUTES ONE OR MORE IN-GAME ACTIONS ON ONE OR MORE OF THE IN-GAME OBJECTS
360
ANALYZE THE GAME STATE OF THE IN-GAME OBJECTS AT TIME 1 AND TIME 2
365
ANALYZE THE IN-GAME ACTIONS PERFORMED BY PLAYER 1 AT TIME 1
370
DETERMINE APPROPRIATE IN-GAME ACTIONS TO PERFORM ON THE IN-GAME OBJECTS AT TIME 2
375
DISPLAY PLAYER 1 PERFORMING THE APPROPRIATE IN-GAME ACTIONS ON THE IN-GAME OBJECTS IN THE GAME INSTANCE AT TIME 2
380
MODIFY THE GAME STATE OF THE IN-GAME OBJECTS BASED ON THE APPROPRIATE IN-GAME ACTIONS AT TIME 2
385

FIG. 3

FIG. 4A

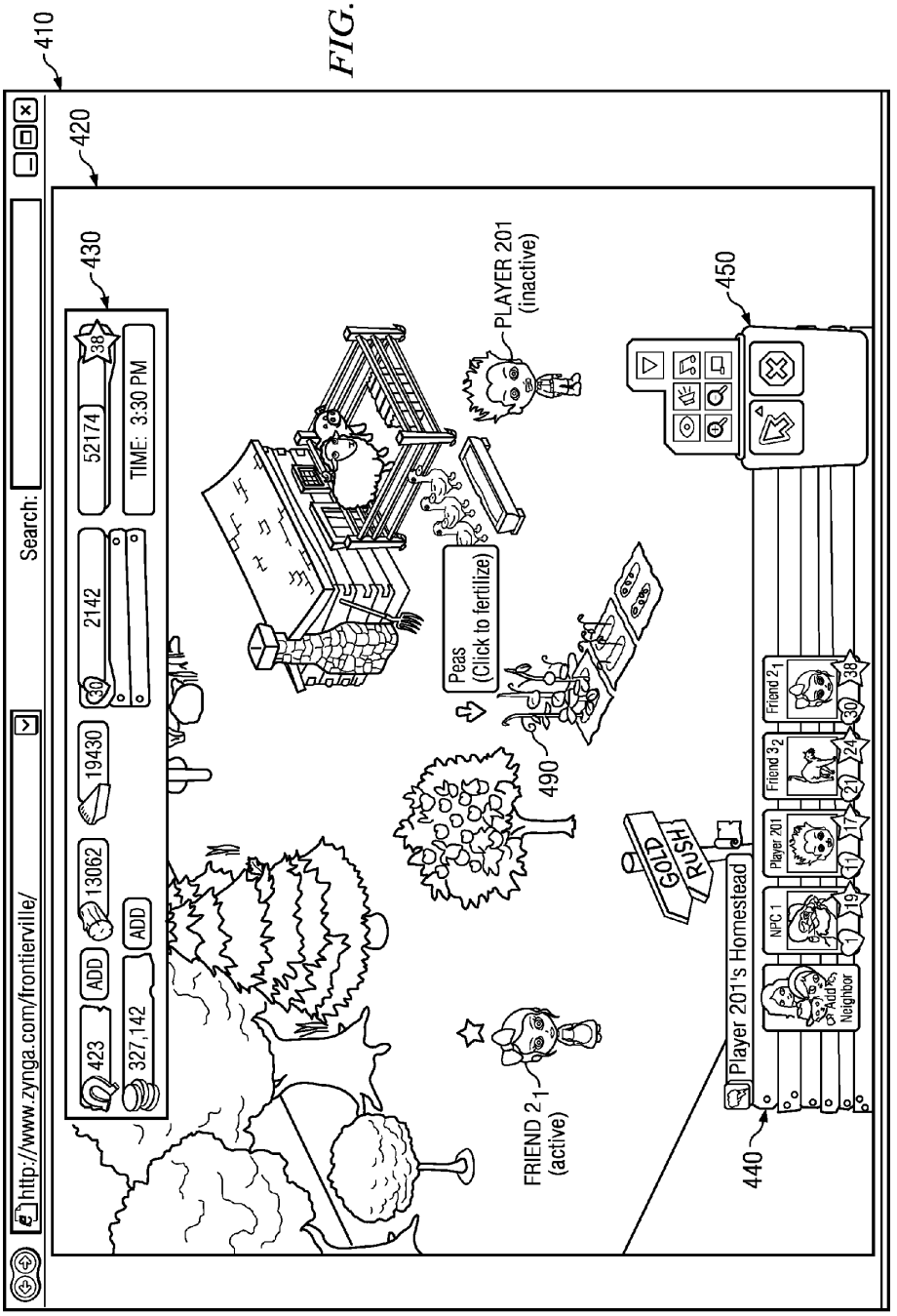
410
420
430
450
440
490
http://www.zynga.com/frontierville/
Search:
423
ADD
13062
19430
30
2142
327,142
ADD
52174
38
TIME: 3:30 PM
PLAYER 201
(inactive)
Peas
(Click to fertilize)
FRIEND 2 1
(active)
GOLD RUSH
Player 201's Homestead
NPC 1
Player 201
Friend 3 2
Friend 2 1
Add Neighbor

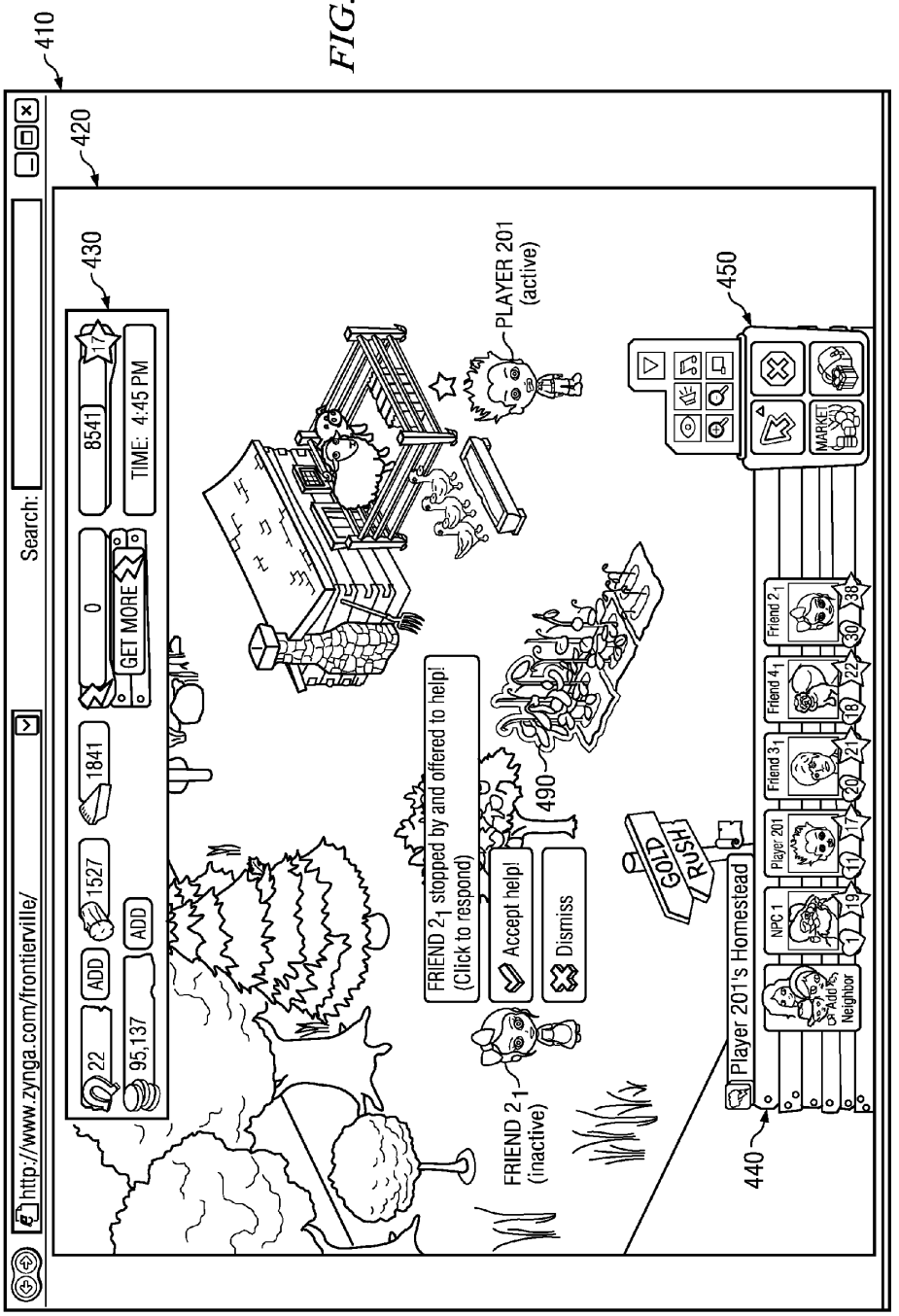
410
http://www.zynga.com/frontierville/
Search:
420
430
22
ADD
1527
1841
0
GET MORE
8541
17
95,137
ADD
TIME: 4:45 PM
PLAYER 201 (active)
450
MARKET
FRIEND 2₁ stopped by and offered to help! (Click to respond)
Accept help!
Dismiss
490
GOLD RUSH
FRIEND 2₁ (inactive)
Player 201's Homestead
440
Neighbor
NPC 1
Player 201
Friend 3₁
Friend 4₁
Friend 2₁

FIG. 4B

FIG. 4C

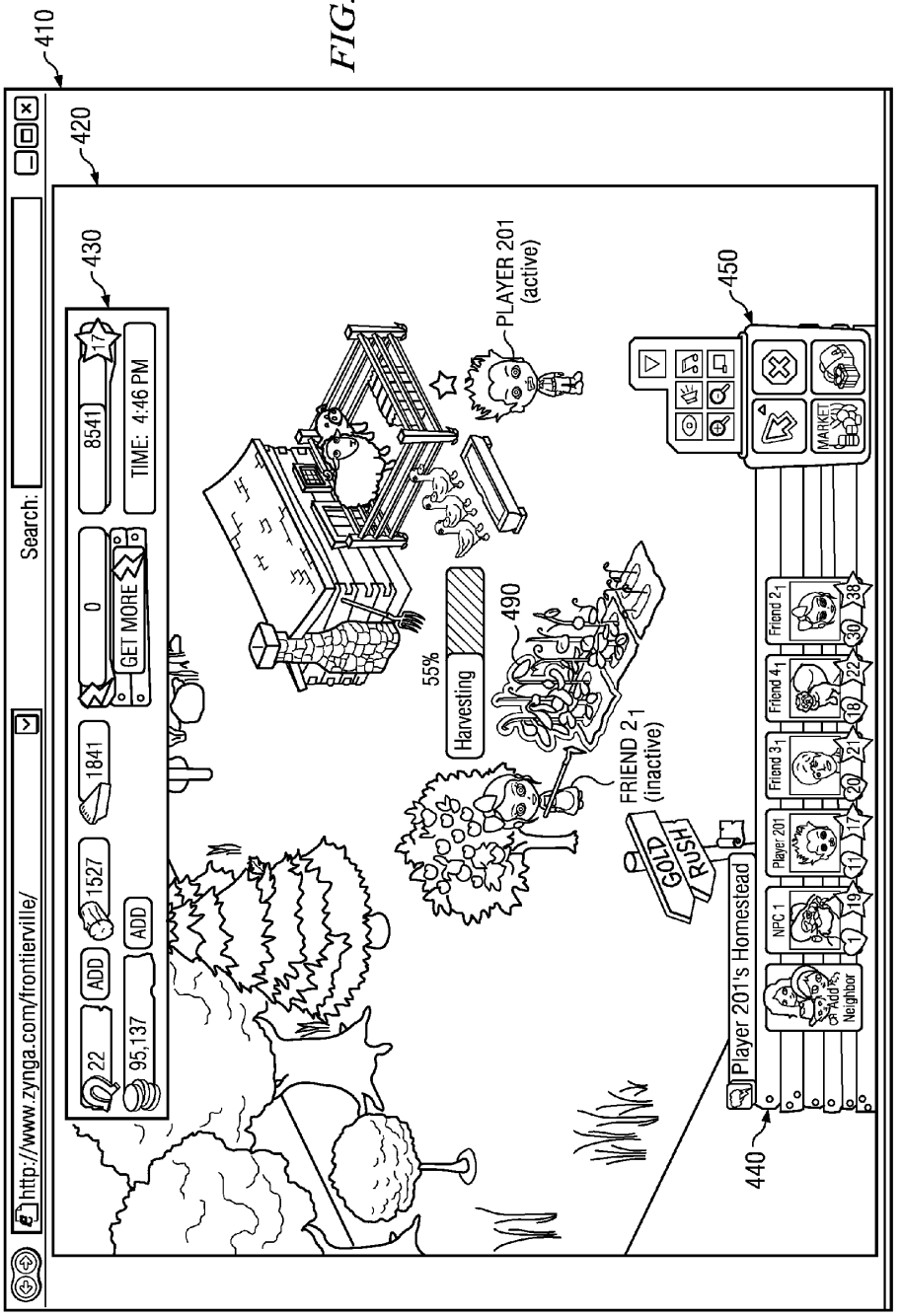
410
http://www.zynga.com/frontierville/
Search:
420
430
22
ADD
1527
1841
0
GET MORE
8541
17
95,137
ADD
TIME: 4:46 PM
PLAYER 201
(active)
55%
Harvesting
490
FRIEND 2 1
(inactive)
GOLD
RUSH
450
MARKET
Friend 2 1
Friend 4 1
Friend 3 1
Player 201
NPC 1
Neighbor
Player 201's Homestead
440

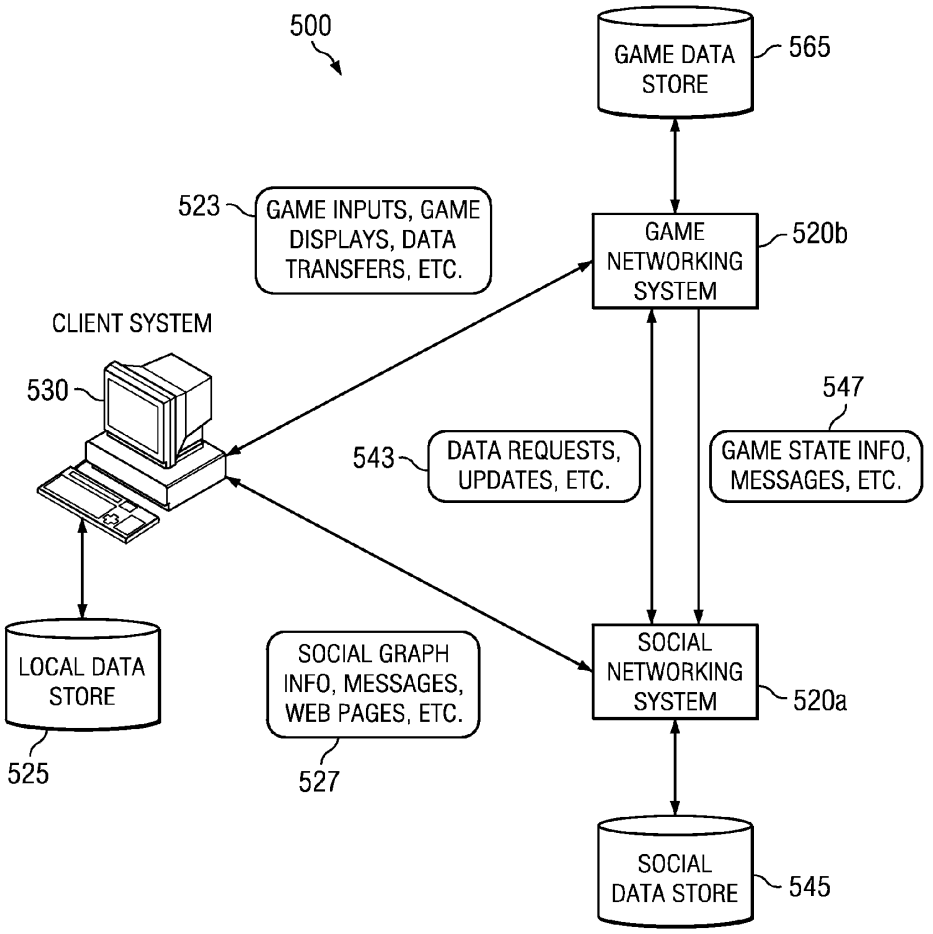
500
GAME DATA STORE
565
523
GAME INPUTS, GAME DISPLAYS, DATA TRANSFERS, ETC.
GAME NETWORKING SYSTEM
520b
CLIENT SYSTEM
530
547
543
DATA REQUESTS, UPDATES, ETC.
GAME STATE INFO, MESSAGES, ETC.
LOCAL DATA STORE
SOCIAL GRAPH INFO, MESSAGES, WEB PAGES, ETC.
SOCIAL NETWORKING SYSTEM
520a
525
527
SOCIAL DATA STORE
545

FIG. 5

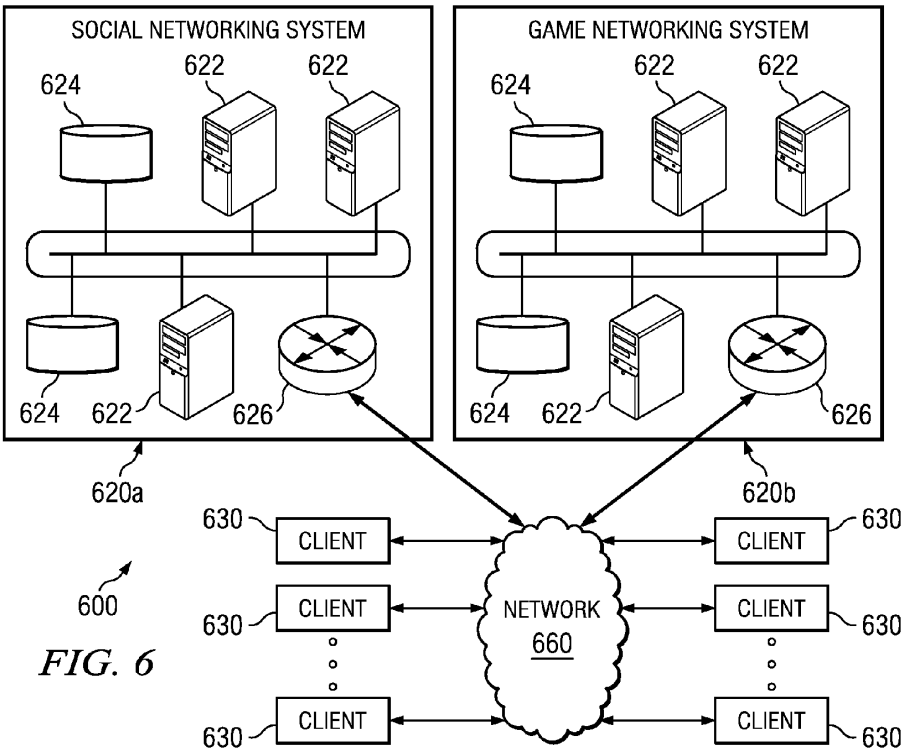
SOCIAL NETWORKING SYSTEM
GAME NETWORKING SYSTEM
624
622
626
620a
620b
600
630
CLIENT
NETWORK
660

FIG. 6

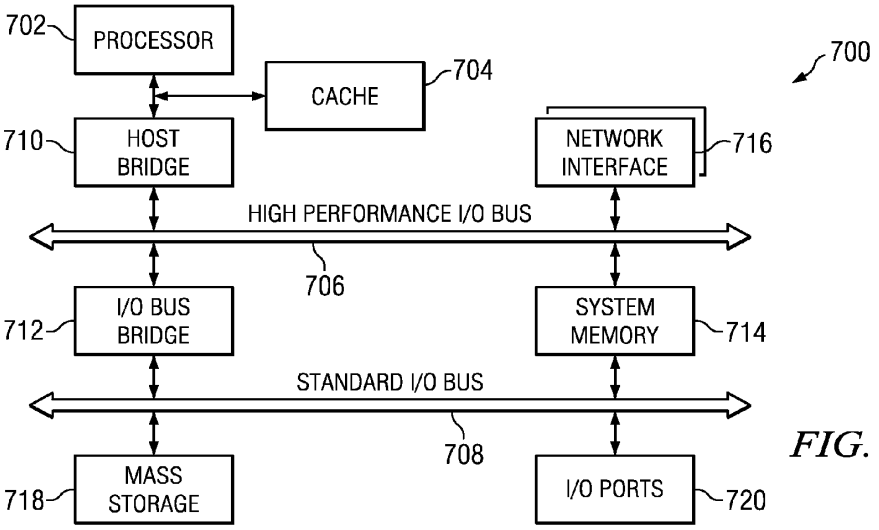
702
PROCESSOR
CACHE
704
700
710
HOST BRIDGE
NETWORK INTERFACE
716
HIGH PERFORMANCE I/O BUS
706
712
I/O BUS BRIDGE
SYSTEM MEMORY
714
STANDARD I/O BUS
708
718
MASS STORAGE
I/O PORTS
720

FIG. 7

ASYNCHRONOUS INTERACTIVE GAME PLAY

TECHNICAL FIELD

This disclosure generally relates to games and applications in general and in particular to computer-implemented online games, such as online role-playing games (RPGs), playable by more than one person from more than one location.

BACKGROUND

In many online computer games, there is a virtual world or some other imagined playing space where a player of the game controls one or more player characters (herein "characters," "player characters," or "PCs"). Player characters can be considered in-game representations of the controlling player. As used herein, the terms player, user, entity, and friend may refer to the in-game player character controlled by that player, user, entity, or friend, unless context suggests otherwise. A game display can display a representation of the player character. A game engine accepts inputs from the player, determines player character actions, decides outcomes of events, and presents the player with a game display illuminating game play. In some games, there are multiple players, wherein each player controls one or more player characters.

An electronic social networking system typically operates with one or more social networking servers providing interaction between users such that a user can specify other users of the social networking system as "friends." A collection of users and the "friend" connections between users can form a social graph that can be traversed to find second, third and more remote connections between users, much like a graph of nodes connected by edges can be traversed.

Many online computer games are operated on an online social network. Such a network allows both users and other parties to interact with the computer games directly, whether to play the games or to retrieve game- or user-related information. Internet users may maintain one or more accounts with various service providers, including, for example, online game networking systems and online social networking systems. Online systems can typically be accessed using browser clients (e.g., Firefox, Chrome, Internet Explorer).

BRIEF DESCRIPTION OF THE DRAWINGS

FIG. **1** illustrates an example of a system for implementing particular disclosed embodiments.

FIG. **2** illustrates an example social network.

FIG. **3** illustrates an example method for implementing particular disclosed embodiments.

FIG. **4**A illustrates an example game instance.

FIG. **4**B illustrates an example game instance.

FIG. **4**C illustrates an example game instance.

FIG. **5** illustrates an example data flow in a system.

FIG. **6** illustrates an example network environment.

FIG. **7** illustrates an example computer system architecture.

DESCRIPTION OF EXAMPLE EMBODIMENTS

FIG. **1** illustrates an example of a system for implementing various disclosed embodiments. In particular embodiments, system **100** comprises player **101**, social network system **120***a*, game networking system **120***b*, client system **130**, and network **160**. The components of system **100** can be connected to each other in any suitable configuration, using any suitable type of connection. The components may be connected directly or over a network **160**, which may be any suitable network. For example, one or more portions of network **160** may be an ad hoc network, an intranet, an extranet, a virtual private network (VPN), a local area network (LAN), a wireless LAN (WLAN), a wide area network (WAN), a wireless WAN (WWAN), a metropolitan area network (MAN), a portion of the Internet, a portion of the Public Switched Telephone Network (PSTN), a cellular telephone network, another type of network, or a combination of two or more such networks.

Social network system **120***a* is a network-addressable computing system that can host one or more social graphs. Social networking system **120***a* can generate, store, receive, and transmit social networking data. Social network system **120***a* can be accessed by the other components of system **100** either directly or via network **160**. Game networking system **120***b* is a network-addressable computing system that can host one or more online games. Game networking system **120***b* can generate, store, receive, and transmit game-related data, such as, for example, game account data, game input, game state data, and game displays. Game networking system **120***b* can be accesses by the other components of system **100** either directly or via network **160**. Player **101** may use client system **130** to access, send data to, and receive data from social network system **120***a* and game networking system **120***b*. Client system **130** can access social networking system **120** or game networking system **120***b* directly, via network **160**, or via a third-party system. As an example and not by way of limitation, client system **130** may access game networking system **120***b* via social networking system **120***a*. Client system **130** can be any suitable computing device, such as a personal computer, laptop, cellular phone, smart phone, computing tablet, etc.

Although FIG. **1** illustrates a particular number of players **101**, social network systems **120***a*, game networking systems **120***b*, client systems **130**, and networks **160**, this disclosure contemplates any suitable number of players **101**, social network systems **120***a*, game networking systems **120***b*, client systems **130**, and networks **160**. As an example and not by way of limitation, system **100** may include one or more game networking systems **120***b* and no social networking systems **120***a*. As another example and not by way of limitation, system **100** may include a system that comprises both social networking system **120***a* and game networking system **120***b*. Moreover, although FIG. **1** illustrates a particular arrangement of player **101**, social network system **120***a*, game networking system **120***b*, client system **130**, and network **160**, this disclosure contemplates any suitable arrangement of player **101**, social network system **120***a*, game networking system **120***b*, client system **130**, and network **160**.

The components of system **100** may be connected to each other using any suitable connections **110**. For example, suitable connections **110** include wireline (such as, for example, Digital Subscriber Line (DSL) or Data Over Cable Service Interface Specification (DOCSIS)), wireless (such as, for example, Wi-Fi or Worldwide Interoperability for Microwave Access (WiMAX)) or optical (such as, for example, Synchronous Optical Network (SONET) or Synchronous Digital Hierarchy (SDH)) connections. In particular embodiments, one or more connections **110** each include an ad hoc network, an intranet, an extranet, a VPN, a LAN, a WLAN, a WAN, a WWAN, a MAN, a portion of the Internet, a portion of the PSTN, a cellular telephone network, or another type of connection, or a combination of two or more such connections. Connections **110** need not necessarily be the same throughout

system **100**. One or more first connections **110** may differ in one or more respects from one or more second connections **110**. Although FIG. **1** illustrates particular connections between player **101**, social network system **120***a*, game networking system **120***b*, client system **130**, and network **160**, this disclosure contemplates any suitable connections between player **101**, social network system **120***a*, game networking system **120***b*, client system **130**, and network **160**. As an example and not by way of limitation, in particular embodiments, client system **130** may have a direct connection to social network system **120***a* or game networking system **120***b*, bypassing network **160**.

Online Games and Game Systems

Game Networking Systems

In an online computer game, a game engine manages the game state of the game. Game state comprises all game play parameters, including player character state, non-player character (NPC) state, in-game object state, game world state (e.g., internal game clocks, game environment), and other game play parameters. Each player **101** controls one or more player characters (PCs). The game engine controls all other aspects of the game, including non-player characters (NPCs), and in-game objects. The game engine also manages game state, including player character state for currently active (online) and inactive (offline) players.

An online game can be hosted by game networking system **120***b*, which can be accessed using any suitable connection with a suitable client system **130**. A player may have a game account on game networking system **120***b*, wherein the game account can contain a variety of information associated with the player (e.g., the player's personal information, financial information, purchase history, player character state, game state). In some embodiments, a player may play multiple games on game networking system **120***b*, which may maintain a single game account for the player with respect to all the games, or multiple individual game accounts for each game with respect to the player. In some embodiments, game networking system **120***b* can assign a unique identifier to each player **101** of an online game hosted on game networking system **120***b*. Game networking system **120***b* can determine that a player **101** is accessing the online game by reading the user's cookies, which may be appended to HTTP requests transmitted by client system **130**, and/or by the player **101** logging onto the online game.

In particular embodiments, player **101** may access an online game and control the game's progress via client system **130** (e.g., by inputting commands to the game at the client device). Client system **130** can display the game interface, receive inputs from player **101**, transmitting user inputs or other events to the game engine, and receive instructions from the game engine. The game engine can be executed on any suitable system (such as, for example, client system **130**, social networking system **120***a*, or game networking system **120***b*). As an example and not by way of limitation, client system **130** can download client components of an online game, which are executed locally, while a remote game server, such as game networking system **120***b*, provides back-end support for the client components and may be responsible for maintaining application data of the game, processing the inputs from the player, updating and/or synchronizing the game state based on the game logic and each input from the player, and transmitting instructions to client system **130**. As another example and not by way of limitation, each time player **101** provides an input to the game through the client system **130** (such as, for example, by typing on the keyboard or clicking the mouse of client system **130**), the client components of the game may transmit the player's input to game networking system **120***b*.

Game Play

In particular embodiments, player **101** can engage in or cause a player character controlled by him to engage in one or more in-game actions. For a particular game, various types of in-game actions may be available to player **101**. As an example and not by way of limitation, a player character in an online role-playing game may be able to interact with other player characters, build a virtual house, attack enemies, go on a quest, and go to a virtual store to buy/sell virtual items. As another example and not by way of limitation, a player character in an online poker game may be able to play at specific tables, place bets of virtual or legal currency for certain amounts, discard or hold certain cards, play or fold certain hands, and play in a online poker tournament.

In particular embodiments, player **101** may engage in an in-game action by providing one or more user inputs to client system **130**. Various actions may require various types and numbers of user inputs. Some types of in-game actions may require a single user input. As an example and not by way of limitation, player **101** may be able to harvest a virtual crop by clicking on it once with a mouse. Some types of in-game actions may require multiple user inputs. As another example and not by way of limitation, player **101** may be able throw a virtual fireball at an in-game object by entering the following sequence on a keyboard: DOWN, DOWN and RIGHT, RIGHT, B. This disclosure contemplates engaging in in-game actions using any suitable number and type of user inputs.

In particular embodiments, player **101** can perform an in-game action on an in-game object. An in-game object is any interactive element of an online game. In-game objects may include, for example, PCs, NPCs, in-game assets and other virtual items, in-game obstacles, game elements, game features, and other in-game objects. This disclosure contemplates performing in-game actions on any suitable in-game objects. For a particular in-game object, various types of in-game actions may be available to player **101** based on the type of in-game object. As an example and not by way of limitation, if player **101** encounters a virtual bear, the game engine may give him the options of shooting the bear or petting the bear. Some in-game actions may be available for particular types of in-game objects but not other types. As an example and not by way of limitation, if player **101** encounters a virtual rock, the game engine may give him the option of moving the rock, however, unlike the virtual bear, the game engine may not allow player **101** to shoot or pet the virtual rock. Furthermore, for a particular in-game object, various types of in-game actions may be available to player **101** based on the game state of the in-game object. As an example and not by way of limitation, if player **101** encounters a virtual crop that was recently planted, the game engine may give him only the option of fertilizing the crop, but if player **101** returns to the virtual crop later when it is fully grown, the game engine may give him only the option of harvesting the crop.

In particular embodiments, the game engine may cause one or more game events to occur in the game. Game events may include, for example, a change in game state, an outcome of an engagement, a completion of an in-game obstacle, a transfer of an in-game asset or other virtual item, or a provision of access, rights and/or benefits. In particular embodiments, a game event is any change in game state. Similarly, any change in game state may be a game event. This disclosure contemplates any suitable type of game event. As an example and not by way of limitation, the game engine may cause a game event where the virtual world cycles between daytime and night-

time every 24 hours. As another example and not by way of limitation, the game engine may cause a game event where a new instance, level, or area of the game becomes available to player **101**. As yet another example and not by way of limitation, the game engine may cause a game event where player **101**'s player character heals one hit point every 5 minutes.

In particular embodiments, a game event or change in game state may be an outcome of one or more in-game actions. The game engine can determine the outcome of a game event or a change in game state according to a variety of factors, such as, for example, game logic or rules, player character in-game actions, player character state, game state of one or more in-game objects, interactions of other player characters, or random calculations. As an example and not by way of limitation, player **101** may overcome an in-game obstacle and earn sufficient experience points to advance to the next level, thereby changing the game state of player **101**'s player character (it advances to the next character level). As another example and not by way of limitation, player **101** may defeat a particular boss NPC in a game instance, thereby causing a game event where the game instance is completed and the player advances to a new game instance. As yet another example and not by way of limitation, player **101** may pick the lock on a virtual door to open it, thereby changing the game state of the door (it goes from closed to open) and causing a game event (the player can access a new area of the game).

In particular embodiments, player **101** may access particular game instances of an online game. A game instance is copy of a specific game play area that is created during runtime. In particular embodiments, a game instance is a discrete game play area where one or more players **101** can interact in synchronous or asynchronous play. A game instance may be, for example, a level, zone, area, region, location, virtual space, or other suitable play area. A game instance may be populated by one or more in-game objects. Each object may be defined within the game instance by one or more variables, such as, for example, position, height, width, depth, direction, time, duration, speed, color, and other suitable variables. A game instance may be exclusive (i.e., accessible by specific players) or non-exclusive (i.e., accessible by any player). In particular embodiments, a game instance is populated by one or more player characters controlled by one or more players **101** and one or more in-game objects controlled by the game engine. When accessing an online game, the game engine may allow player **101** to select a particular game instance to play from a plurality of game instances. Alternatively, the game engine may automatically select the game instance that player **101** will access. In particular embodiments, an online game comprises only one game instance that all players **101** of the online game can access.

In particular embodiments, a specific game instance may be associated with one or more specific players. A game instance is associated with a specific player when one or more game parameters of the game instance are associated with the specific player. As an example and not by way of limitation, a game instance associated with a first player may be named "First Player's Play Area." This game instance may be populated with the first player's PC and one or more in-game objects associated with the first player. In particular embodiments, a game instance associated with a specific player may only be accessible by that specific player. As an example and not by way of limitation, a first player may access a first game instance when playing an online game, and this first game instance may be inaccessible to all other players. In other embodiments, a game instance associated with a specific player may be accessible by one or more other players, either synchronously or asynchronously with the specific player's game play. As an example and not by way of limitation, a first player may be associated with a first game instance, but the first game instance may be accessed by all first-degree friends in the first player's social network. In particular embodiments, the game engine may create a specific game instance for a specific player when that player accesses the game. As an example and not by way of limitation, the game engine may create a first game instance when a first player initially accesses an online game, and that same game instance may be loaded each time the first player accesses the game. As another example and not by way of limitation, the game engine may create a new game instance each time a first player accesses an online game, wherein each game instance may be created randomly or selected from a set of predetermined game instances. In particular embodiments, the set of in-game actions available to a specific player may be different in a game instance that is associated with that player compared to a game instance that is not associated with that player. The set of in-game actions available to a specific player in a game instance associated with that player may be a subset, superset, or independent of the set of in-game actions available to that player in a game instance that is not associated with him. As an example and not by way of limitation, a first player may be associated with Blackacre Farm in an online farming game. The first player may be able to plant crops on Blackacre Farm. If the first player accesses game instance associated with another player, such as Whiteacre Farm, the game engine may not allow the first player to plant crops in that game instance. However, other in-game actions may be available to the first player, such as watering or fertilizing crops on Whiteacre Farm.

Harvest Mechanic

In particular embodiments, an online game can include a series of user-initiated in-game actions that comprise a harvest mechanic. The harvest mechanic generally has two components: a set of initiating actions and a set of collecting actions. In an initiating action, player **101** may "click" or otherwise interact with an in-game object of the online game to initiate the harvest mechanic. In some games, multiple clicks or other actions may be necessary to complete the initiating action. For example, player **101** may have to click on a stove to clean it and click again to prepare ingredients and initiate cooking virtual food. In another example, player **101** may have to click on a parcel of virtual land to plow it and click again to plant seeds and initiate growing virtual crops.

Once the initiating action is complete, the online game may begin a processing action, wherein the game state of the in-game object is modified by the game system during some time period. The time period can range from seconds to days, depending on the online game. For example, the game engine may require an hour for virtual food to get cooked, or it may require three days for a virtual crop to grow. During the processing action, player **101** may be able to cancel the processing action, thereby resetting the entire harvest mechanic sequence. During the processing action, player **101** may also be able to interact with the in-game object. For example, player **101** could add spice to his virtual food while it is cooking, or player **101** could add fertilizer to his virtual crops while they are growing. These interactions may or may not cause a change in game state of the in-game object. In particular embodiments, there is no processing action, and the collecting action is accessible immediately after the initiating action is complete. In other embodiments, the processing action is instantaneous.

After the processing action is complete, the game engine can alter the game state of the in-game object. At this point,

the collecting action may be available. In a collecting action, player **101** may click or otherwise interact with the in-game object to complete the harvest mechanic. For example, player **101** may have to click on the fully-cooked virtual food to serve it. In another example, player **101** may have to click on fully-grown crops to harvest them. In some games, multiple clicks or other actions may be necessary to complete the collecting action. In particular embodiments, one or more in-game assets are other game benefits are provided to player **101** for completing the collecting action.

Once the collecting action is complete, the harvest mechanic may be reset with respect to that game in-game object. In some embodiments, player **101** may have to click or otherwise interact with the in-game object to reset the harvest mechanic. In other embodiments, the harvest mechanic may reset automatically once the collecting action is complete. Once the harvest mechanic is reset, the initiating action may be available again for that in-game object.

In particular embodiments, certain game events may cause the harvest mechanic to terminate. As an example and not by way of limitation, if the collecting action is not performed on an in-game object within a certain period of time, the game engine may remove access to the collecting action for that in-game object. This may prevent player **101** from receiving any in-game assets or other game benefits awarded for performing the collecting action on that in-game object. Furthermore, player **101** may then have to perform one or more in-game actions to reset the harvest mechanic with respect to that in-game object. As another example and not by way of limitation, if the collecting action is not performed on virtual crops with a certain period of time, the game engine may cause the crops to wilt, such that the collecting action can no longer be performed on the crops.

In particular embodiments, a harvest mechanic can be performed by a plurality of players **101** of an online game. A plurality of players **101** can perform a plurality of in-game actions on an in-game object during synchronous or asynchronous game play. As an example and not by way of limitation, a first player may click on a parcel of virtual land to plow it at a first time, and a second player may click on the parcel to plant seeds at a later time. In particular embodiments, particular steps of the harvest mechanic may only be performed by specific players. As an example and not by way of limitation, a game instance associated with that first player may include a parcel of virtual land with wilted crops. Because the game instance is associated with the first player, that player may only be able to performing a clearing action on the wilted crops, thereby resetting the harvest mechanic. However, a second player who is not associated with the game instance may be able to access the game instance and perform other in-game actions on the parcel, such as performing a unwither action, which resets the harvest mechanic to the beginning of the collecting action. If the second player performs an unwither action, the first player may then be able to perform a collecting action on the virtual crops.

Social Graphs and Social Networking Systems

In particular embodiments, a game engine can interface with a social graph. Social graphs are models of connections between entities (e.g., individuals, users, contacts, friends, players, player characters, non-player characters, businesses, groups, associations, concepts, etc.). These entities are considered "users" of the social graph; as such, the terms "entity" and "user" may be used interchangeably when referring to social graphs herein. A social graph can have a node for each entity and edges to represent relationships between entities. A node in a social graph can represent any entity. In particular embodiments, a unique client identifier can be assigned to each user in the social graph. This disclosure assumes that at least one entity of a social graph is a player or player character in an online multiplayer game, though this disclosure any suitable social graph users.

The minimum number of edges required to connect a player (or player character) to another user is considered the degree of separation between them. For example, where the player and the user are directly connected (one edge), they are deemed to be separated by one degree of separation. The user would be a so-called "first-degree friend" of the player. Where the player and the user are connected through one other user (two edges), they are deemed to be separated by two degrees of separation. This user would be a so-called "second-degree friend" of the player. Where the player and the user are connected through N edges (or N−1 other users), they are deemed to be separated by N degrees of separation. This user would be a so-called "Nth-degree friend." As used herein, the term "friend" means only first-degree friends, unless context suggests otherwise.

Within the social graph, each player (or player character) has a social network. A player's social network includes all users in the social graph within N_{max} degrees of the player, where N_{max} is the maximum degree of separation allowed by the system managing the social graph (such as, for example, social networking system **120***a* or game networking system **120***b*). In one embodiment, N_{max} equals 1, such that the player's social network includes only first-degree friends. In another embodiment, N_{max} is unlimited and the player's social network is coextensive with the social graph.

In particular embodiments, the social graph is managed by game networking system **120***b*, which is managed by the game operator. In other embodiments, the social graph is part of a social networking system **120***a* managed by a third-party (e.g., Facebook, Friendster, Myspace). In yet other embodiments, player **101** has a social network on both game networking system **120***b* and social networking system **120***a*, wherein player **101** can have a social network on the game networking system **120***b* that is a subset, superset, or independent of the player's social network on social networking system **120***a*. In such combined systems, game network system **120***b* can maintain social graph information with edge type attributes that indicate whether a given friend is an "in-game friend," an "out-of-game friend," or both. The various embodiments disclosed herein are operable when the social graph is managed by social networking system **120***a*, game networking system **120***b*, or both.

FIG. **2** shows an example of a social network within a social graph. As shown, Player **201** can be associated, connected or linked to various other users, or "friends," within the social network **250**. These associations, connections or links can track relationships between users within the social network **250** and are commonly referred to as online "friends" or "friendships" between users. Each friend or friendship in a particular user's social network within a social graph is commonly referred to as a "node." For purposes of illustration and not by way of limitation, the details of social network **250** will be described in relation to Player **201**. As used herein, the terms "player" and "user" can be used interchangeably and can refer to any user or character in an online multiuser game system or social networking system. As used herein, the term "friend" can mean any node within a player's social network.

As shown in FIG. **2**, Player **201** has direct connections with several friends. When Player **201** has a direct connection with another individual, that connection is referred to as a first-degree friend. In social network **250**, Player **201** has two first-degree friends. That is, Player **201** is directly connected to Friend $\mathbf{1}_1$ **211** and Friend $\mathbf{2}_1$ **221**. In a social graph, it is

possible for individuals to be connected to other individuals through their first-degree friends (i.e., friends of friends). As described above, each edge required to connect a player to another user is considered the degree of separation. For example, FIG. **2** shows that Player **201** has three second-degree friends to which he is connected via his connection to his first-degree friends. Second-degree Friend $\mathbf{1}_2$ **212** and Friend $\mathbf{2}_2$ **222** are connected to Player **201** via his first-degree Friend $\mathbf{1}_1$ **211**. The limit on the depth of friend connections, or the number of degrees of separation for associations, that Player **201** is allowed is typically dictated by the restrictions and policies implemented by social networking system **120***a*.

In various embodiments, Player **201** can have Nth-degree friends connected to him through a chain of intermediary degree friends as indicated in FIG. **2**. For example, Nth-degree Friend $\mathbf{1}_N$ **219** is connected to Player **201** via second-degree Friend $\mathbf{3}_2$ **232** and one or more other higher-degree friends. Various embodiments may take advantage of and utilize the distinction between the various degrees of friendship relative to Player **201**.

In particular embodiments, a player (or player character) can have a social graph within an online multiplayer game that is maintained by the game engine and another social graph maintained by a separate social networking system. FIG. **2** depicts an example of in-game social network **260** and out-of-game social network **250**. In this example, Player **201** has out-of-game connections **255** to a plurality of friends, forming out-of-game social network **250**. Here, Friend $\mathbf{1}_1$ **211** and Friend $\mathbf{2}_1$ **221** are first-degree friends with Player **201** in his out-of-game social network **250**. Player **201** also has in-game connections **265** to a plurality of players, forming in-game social network **260**. Here, Friend $\mathbf{2}_1$ **221**, Friend $\mathbf{3}_1$ **231**, and Friend $\mathbf{4}_1$ **241** are first-degree friends with Player **201** in his in-game social network **260**. In some embodiments, it is possible for a friend to be in both the out-of-game social network **250** and the in-game social network **260**. Here, Friend $\mathbf{2}_1$ **221** has both an out-of-game connection **255** and an in-game connection **265** with Player **201**, such that Friend $\mathbf{2}_1$ **221** is in both Player **201**'s in-game social network **260** and Player **201**'s out-of-game social network **250**.

As with other social networks, Player **201** can have second-degree and higher-degree friends in both his in-game and out of game social networks. In some embodiments, it is possible for Player **201** to have a friend connected to him both in his in-game and out-of-game social networks, wherein the friend is at different degrees of separation in each network. For example, if Friend $\mathbf{2}_2$ **222** had a direct in-game connection with Player **201**, Friend $\mathbf{2}_2$ **222** would be a second-degree friend in Player **201**'s out-of-game social network, but a first-degree friend in Player **201**'s in-game social network. In particular embodiments, a game engine can access in-game social network **260**, out-of-game social network **250**, or both.

In particular embodiments, the connections in a player's in-game social network can be formed both explicitly (e.g., users must "friend" each other) and implicitly (e.g., system observes user behaviors and "friends" users to each other). Unless otherwise indicated, reference to a friend connection between two or more players can be interpreted to cover both explicit and implicit connections, using one or more social graphs and other factors to infer friend connections. The friend connections can be unidirectional or bidirectional. It is also not a limitation of this description that two players who are deemed "friends" for the purposes of this disclosure are not friends in real life (i.e., in disintermediated interactions or the like), but that could be the case.

Asynchronous Game Play

In multiplayer online games, two or more players can play in the same game instance. Game play is asynchronous when the players do not play simultaneously in the game instance. In particular embodiments, synchronous game play between two players in the same game instance can be simulated from asynchronous game play by recording the game play of a first player in the game instance at a first time and replaying that game play during the game play of a second player in the game instance at a later time.

Example Methods

In particular embodiments, the game engine can record the in-game actions of a first player in a game instance for later play-back by other players in the game instance, and then the game engine load and execute the previously recorded in-game actions during the game play of other players in the game instance. FIG. **3** illustrates an example method **300** for implementing particular disclosed embodiments.

At step **305**, a first player (Player **1**) can access an online game. In particular embodiments, Player **1** can access the online game on game networking system **120***b*, social networking system **120***a*, or both. As an example and not by way of limitation, Player **1** may access, via client system **130**, a webpage hosted by social networking system **120***a*, wherein the webpage has an embedded game interface hosted by game networking system **120***b*.

At step **310**, the game engine can access the Player **1**'s social networking information. In particular embodiments, the game engine can access social networking information on social networking system **120***a*, game networking system **120***b*, or both. As an example and not by way of limitation, Player **1** may have an out-of-game social network **250** on social networking system **120***a* and an in-game social network **260** on game networking system **120***b*, wherein the in-game social network **260** is a subset of Player **1**'s first-degree friends in out-of-game social network **250**. In other embodiments, the game engine does not access any social networking information, such that method **300** bypasses step **310**.

At step **315**, Player **1** can select a game instance to access. In particular embodiments, Player **1** can select the game instance from a set of game instances associated with another player of the online game. In particular embodiments, Player **1** can select the game instance from a set of game instances associated with friends in Player **1**'s social network. Here, Player **1** selects a second player (Player **2**), who is a friend in Player **1**'s social network. In other embodiments, Player **1** can only access game instances associated with first-degree friends in Player **1**'s in-game social network. In yet other embodiments, Player **1** can access a game instance from a set of predetermined game instances, wherein the game instances may or may not be associated with other players.

At step **320** the game engine can then load the game instance selected by Player **1**. Here, the game engine loads the game instance associated with Player **2** at a first time (Time **1**). As used herein, "time" may refer a specific time point or a time period of specific duration. In particular embodiments, the game engine automatically loads a game instance and Player **1** does not performing any selection, such that method **300** bypasses steps **310-315**. The in-game objects in the game instance have particular game states at Time **1**.

At step **325**, Player **1** can perform one or more in-game actions on one or more in-game objects in the game instance. In particular embodiments, the game engine can display Player **1**'s in-game actions and the associated game state

changes to Player **1**, but any game state changes to in-game objects caused by Player **1**'s in-game actions may not be stored on game networking system **120***b*. In other embodiments, the game engine can display Player **1**'s in-game actions and the associated game state changes to Player **1**, but any game state changes to in-game objects caused by Player **1**'s in-game actions may be stored in a new copy of the game instance. In one implementation, the game engine stores an identifier for the in-game objects on which Player **1** has performed actions, such as clicking on an object to advance the progression of a harvest mechanic as to a game object, like a plot of land.

At step **330**, the game engine can record each in-game action performed by Player **1**. In particular embodiments, the in-game actions are stored in a data store in social networking system **120***a*, game networking system **120***b*, or both. The game engine can also record any game state changes to in-game objects caused by Player **1**'s in-game actions. This disclosure contemplates any suitable systems for storing in-game actions, game state changes, and other game-related data.

At step **335**, Player **1** can then exit the game instance associated with Player **2**. Player **1** can then access another game instance (such as, for example, a game instance associated with yet another player in Player **1**'s in-game social network) or exit the online game. Player **1** is considered inactive once he exits the online game.

At step **340**, Player **2** can access the online game. In particular embodiments, Player **2** can access the online game on game networking system **120***b*, social networking system **120***a*, or both. As an example and not by way of limitation, Player **2** may access, via client system **130**, a webpage hosted by social networking system **120***a*, wherein the webpage has an embedded game interface hosted by game networking system **120***b*.

At step **345**, the game engine can load a game instance for Player **2**. Here, the game engine loads the game instance associated with Player **2** at a second time (Time **2**), wherein Time **2** is at a later time than Time **1**. In particular embodiments, Player **2** selects a game instance to load from a set of game instances, wherein the game instances may or may not be associated with players of the online game. The in-game objects in the game instance have particular game states at Time **2**, and these game states may be the same or different as the game states of the in-game objects at Time **1**. As an example and not by way of limitation, the game engine may automatically change the game state of specific in-game objects over time, such as, for example, a virtual crop may change game state from growing to fully-grown after a specific period of time. Because the in-game actions that can be performed on specific in-game objects may vary based on the current game state of the in-game object, the set of in-game actions that can be performed on a specific in-game object at Time **1** may vary from the set of in-game action that can be performed at Time **2**. In particular embodiments, game state changes associated with Player **1**'s in-game actions at Time **1** are not yet implemented in the game instance. As an example and not by way of limitation, if Player **1** harvested a fully-grown crop at Time **1**, that crop may appear unharvested to Player **2** when the game instance is loaded at Time **2**. As an example and not by way of limitation, if Player **1** harvested a fully-grown crop at Time **1**, that crop may appear withered to Player **2** when the game instance is loaded at Time **2**. As yet another example and not by way of limitation, if Player **1** shot a virtual bear in the game instance at Time **1**, that bear may appear as yet uninjured to Player **2** when the game instance is loaded at Time **2**.

At step **350**, the game engine can load a recording of one or more in-game actions performed by Player **1**. Here, the game engine loads the in-game actions recorded at step **330**. In one implementation, the recorded data includes identifiers associated with one or more in-game objects on which Player **1** clicked. In some instances, a given in-game object may be identified more than once in the recorded data. In particular embodiments, the game engine can also load a recording of the game state changes associated with the in-game actions performed by Player **1**. In other embodiments, the game engine can load a recording of the game state changes associated with the in-game actions performed by Player **1**, but the game engine may not load a recording of the in-game actions. In some embodiments, the game engine can also load and display Player **1**'s player character. In other embodiments, the game engine can load and display a proxy of Player **1**'s player character. A proxy is a type of NPC wherein one or more attributes of the proxy are based on a PC. The proxy can be created and controlled by the game engine regardless of whether the player of the PC the proxy is based on is actively using the online game. Still further, other players may have performed similar actions to Player **1** with respect to the game instances of Player **2**. This data may have also been recorded and may be presented to Player **2**.

At step **355**, Player **2** can select whether or not to play-back the recording of Player **1**'s in-game actions. Here, Player **2** selects to play-back the recording of Player **1**'s in-game actions. As an example and not by way of limitation, the game engine can load a proxy of Player **1**'s player character. Player **2** can then mouse over or otherwise interact with the proxy to activate some type of option window. The option window can give Player **2** the option of whether or not to play-back Player **1**'s recorded in-game actions. If Player **2** chooses to play-back the recording, method **300** can proceed to step **360**. Otherwise, method **300** can ignore, delete, or negate Player **1**'s recorded in-game actions. This disclosure contemplates using any suitable method for selecting to play-back recorded in-game actions. In particular embodiments, Player **2** can perform one or more in-game action prior to selecting whether or not to play-back the recording of Player **1**'s in-game actions. This may further change the game state of one or more in-game objects at Time **2**, which may affect the implementation of other steps in method **300**. This disclosure contemplates any suitable sequence for recording and playing back Player **1**'s in-game actions during the subsequent game play of Player **2**.

At step **360**, the game engine can execute one or more of Player **1**'s recorded in-game actions on one or more of the in-game objects in the game instance. Step **360** can include one or more of sub-steps **365** through **385**. Step **360** can also include other sub-steps not described herein. This disclosure contemplates any suitable number and type of sub-steps for executing recorded in-game actions by one or more players.

At sub-step **365**, the game engine can analyze and compare the game state of the in-game objects at Time **1** and Time **2** (the current game state) to determine, for example, if the game state of any of the in-game objects has changed. By comparing the game states at Time **1** and Time **2**, the game engine can determine if and how the game states have changed over time. In particular embodiments, an in-game object in a game instance may have a first game state at Time **1** and a second game state at Time **2**. As an example and not by way of limitation, a virtual bear may be injured at Time **1** and have only one hit point, and then the game engine may cause the virtual bear to heal three hit points between Times **1** and **2**, bringing it to a total of four hit points at Time **2**. In particular embodiments, an in-game object in a game instance

that existed at Time **1** may no longer exist at Time **2**. As an example and not by way of limitation, a virtual crop on a plot unit of land may exist in a game instance at Time **1**, and then a player may access the game instance at a time between Times **1** and **2** and perform a collecting action on the crop, thereby removing it from the game instance. Consequently, when the game instance is accessed at Time **2**, the in-game object is no longer present.

At sub-step **370**, the game engine can analyze the in-game actions performed by Player **1** at Time **1** to determine, for example, if the in-game actions or the game state changes caused by the in-game actions at Time **1** are compatible with the game states of the in-game objects at Time **2**. As an example and not by way of limitation, Player **1** may have performed a collecting action on a virtual crop at Time **1**. At Time **2**, the game engine may have changed the game state of that virtual crop from fully-grown to wilted. Because collecting actions cannot be performed on wilted crops, Player **1**'s in-game at Time **1** is not compatible with the game state of the in-game object at Time **2**.

At sub-step **375**, the game engine can determine one or more appropriate in-game actions to perform on the in-game objects. An appropriate in-game action is one that is consistent with the game logic of the online game. In particular embodiments, the game engine can determine an appropriate in-game action based on the game state of the in-game object at Time **2**. As an example and not by way of limitation, if the game state of an in-game object is the same at Time **1** and Time **2**, the game engine may determine that the in-game action performed by Player **1** on the in-game object at Time **1** is appropriate. However, if the game state of an in-game object is different at Time **1** and Time **2**, the game engine may determine that the in-game action performed by Player **1** on that in-game object at Time **1** is no longer appropriate. In the latter case, the game engine can determine an alternate in-game action to substitute for the in-game action from Time **1**. Alternatively, the game engine can negate or ignore the in-game action from Time **1**. As another example and not by way of limitation, a game instance may have a virtual crop. If the virtual crop was still growing (i.e., in a processing action) at Time **1**, Player **1** may fertilize the crop at Time **1**. At Time **2**, the crop may be fully-grown. As such, an appropriate in-game action at Time **2** would be to perform a collecting action on the virtual crop. In particular embodiments, the game engine can determine an appropriate in-game action based on the in-game action performed by Player **1** on the in-game object at Time **1**. As an example and not by way of limitation, a player may be able to pet or shoot a virtual bear in a game instance. If Player **1** petted a virtual bear at Time **1**, though it may still be consistent with game logic to shoot the bear at Time **2**, the game engine may determine that the appropriate in-game action at Time **2** is to pet the bear based on Player **1**'s in-game action at Time **1**.

At sub-step **380**, the game engine can display Player **1**'s player character (or a proxy of the player character) performing the appropriate in-game actions determined at step **375**. If the game engine determined that an in-game action from Time **1** is still appropriate, it can display Player **1** performing that in-game action. If the game engine determined that the in-game action from Time **1** was not appropriate, it can display the alternate in-game action, or possibly display no in-game action at all (for example, if the in-game object no longer exists).

At sub-step **385**, the game engine can then modify the game state of the in-game objects based on the appropriate in-game actions. In particular embodiments, the change in game state may be based on the appropriate in-game action as determined at sub-step **375**. In other embodiments, the change in game state may be based on the displayed in-game action performed by Player **1** (or a proxy) at sub-step **380**. By displaying Player **1** performing the appropriate in-game actions at Time **2** rather than the actions Player **1** originally performed at Time **1**, the game engine is able to create the illusion of synchronous game play from asynchronous game play essentially by displaying a modified version of Player **1**'s prior game play.

Although this disclosure describes and illustrates particular steps of the method of FIG. **3** as asynchronous game play between two players, this disclosure contemplates asynchronous game play between any number of players. Moreover, although this disclosure describes and illustrates particular steps of the method of FIG. **3** as occurring in a particular order, this disclosure contemplates any suitable steps of the method of FIG. **3** occurring in any suitable order. Furthermore, although this disclosure describes and illustrates particular components carrying out particular steps of the method of FIG. **3**, this disclosure contemplates any suitable combination of any suitable components carrying out any suitable steps of the method of FIG. **3**. Finally, although this disclosure describes examples of the method of FIG. **3** as involving particular in-game actions, in-game objects, and game states, this disclosure contemplates any suitable in-game actions, in-game objects, and game states.

FrontierVille Example

FIGS. **4**A, **4**B, and **4**C illustrate an example embodiment of a game instance in an online role-playing game (RPG). FIGS. **4**A-**4**C illustrate an example of a virtual homestead in Zynga's FrontierVille online game, however this disclosure contemplates any suitable online game. A player of the online RPG can access the game via a browser client **410**, which presents game interface **420**. Game interface **420** shows Player **201**'s player character on "Player **201**'s Homestead," which is a game instance associated with Player **201**. Game interface **420** also shows Friend $\mathbf{2}_1$'s player character on the homestead. For purposes of illustration, FIGS. **4**A-**4**C refer to users of the social networks illustrated in FIG. **2**. Although this disclosure describes and illustrates in FIGS. **4**A-**4**C the game play of particular players in a particular game instance in a particular online game, this disclosure contemplates game play by any suitable players in any suitable game instance in any suitable online game. Moreover, although this disclosure describes and illustrates in FIGS. **4**A-**4**C the game play of players in a particular social network, this disclosure contemplates game play by any suitable players regardless of whether the player is a user of a particular social network. Game interface **420** displays player character state information of the active player in box **430**. Game interface **420** also displays all the first-degree friends from the active player's in-game social network (such as, for example, in-game social network **260**) in box **440**. The first-degree friends in box **440** are players of the online game who have formed an explicit in-game connection (such as, for example, in-game connection **265**) with the active player. For example, FIG. **4**A shows Friend $\mathbf{2}_1$'s first-degree friends are Friend $\mathbf{3}_2$, Player **201**, and NPC **1**, wherein NPC **1** is a non-player character controlled by the game engine. As another example, FIGS. **4**B and **4**C show Player **101**'s first-degree friends are Friend $\mathbf{2}_1$, Friend $\mathbf{3}_1$, Friend $\mathbf{4}_1$, and NPC **1**. Game interface **420** also displays a menu for selection a variety of in-game actions in box **450**.

In particular embodiments, a player controls a player character on a virtual homestead in the online RPG. The player (via his player character) can build and maintain the virtual homestead. The player can engage in a variety of in-game actions on the virtual homestead. For example, the player can

plants seeds, which grow into crops, which can be harvested to earn in-game assets. Building, animals, trees, and other in-game objects can also be purchased and various in-game actions can be performed on these in-game objects.

Particular in-game objects can be interacted with using the harvest mechanic described previously. As an example and not by way of limitation, various virtual crops can be planted, grown, and harvested using a series of user-initiated in-game actions comprising a harvest mechanic. To grow crops, a player must first select a type of crop to plant (e.g., cotton, wheat, etc.). Each type of crop has a cost in virtual currency and a time necessary for it to grow into a harvestable crop. For example, wheat has a 24 hour growth time and costs **365** virtual coins. The player can then click on a plot of land, and his player character will move to the plot of land and plant the crop, thereby completing the initiating action. The player's game account is also debited by the amount of virtual coins needed to buy the crop. Once the crops are planted, the processing action begins, and the game engine indicates that the crops are growing. By clicking on the growing crops, the player can view how much time is remaining in the processing action. Once the growth time has elapsed, the processing action will end and the game engine will modify the crops into fully-grown harvestable crops. The player can then perform a collecting action by clicking on the crops to harvest them and sell them for virtual coins. For example, wheat yields 587 virtual coins per plot. Crops disappear after being harvested. This completes the collecting action. If the crop is not harvested within a specific time, it will wilt and must be plowed and replanted, unless the unwither action is performed on the withered crops. For example, wheat will grow in 24 hours. If the wheat is not harvested within 24 after the crop are fully-grown, it will wither and die, and the player will not be able to harvest it for virtual coins, unless the unwither action is performed on the crop. To gain access to the unwither action, the player may spend legal or virtual currency to buy one or more uses of the unwither action. Alternatively, first-degree friends can visit the player's homestead and perform the unwither action.

FIG. **4**A illustrates the game play of a first player (Friend $\mathbf{2}_1$) in a specific game instance at a first time. Friend $\mathbf{2}_1$ can access the online RPG on game networking system **120***b* via a suitable browser client on client system **130**. Friend $\mathbf{2}_1$ can provide user-inputs via game interface **420**. Typically, when a player accesses the online RPG, the game engine automatically loads a game instance associated with that player. From there, the player can choose to access other game instances, such as, for example, game instances associated with first-degree friends in their in-game social network. FIG. **4**A illustrates Friend $\mathbf{2}_1$ accessing a game instance associated with a second player (Player **201**), which is called "Player **201**'s Homestead." Friend $\mathbf{2}_1$'s player character state is displayed in box **430** and her first-degree in-game friends are displayed in box **440**. Box **430** also displays a game clock, which shows a time of "3:30 PM." FIG. **4**A also illustrates Friend $\mathbf{2}_1$'s player character as active and Player **201**'s player character as inactive. From here, Friend $\mathbf{2}_1$ can perform one or more in-game actions on one or more in-game objects in Player **201**'s Homestead. For example, by clicking on virtual peas **490**, Friend $\mathbf{2}_1$ will cause her player character to move over to virtual peas **490** and perform a fertilizing action. In FIG. **4**A, virtual peas **490** are growing, and currently in a processing action. By performing a fertilizing action, Friend $\mathbf{2}_1$ may cause the game state of the virtual peas **490** to change. The game engine will record Friend $\mathbf{2}_1$'s fertilizing action on virtual peas **490**, and this is stored on game networking system **120***b*. However, any game state changes caused by Friend $\mathbf{2}_1$'s in-game actions will not be recorded.

FIGS. **4**B and **4**C illustrate the game play of Player **201** in the same game instance at a later time. Player **201** can access the online RPG on a game networking system **120***b* via a suitable browser client on client system **130**. Player **201** can provide user-inputs via game interface **420**. When Player **201** accesses the online RPG, the game engine automatically loads the game instance associated with Player **201**, here "Player **201**'s Homestead." Player **201**'s player character state is displayed in box **430** and his first-degree in-game friends are displayed in box **440**. Box **430** also displays a game clock, which shows a time of "3:45 PM" in FIG. **4**B and "3:46 PM" in FIG. **4**C. Here, Player **201**'s game play as illustrated in FIGS. **4**B and **4**C is occurring at a later time than Friend $\mathbf{2}_1$'s game play described above. FIGS. **4**B and **4**C also illustrate Friend $\mathbf{2}_1$'s player character as inactive and Player **201**'s player character as active.

FIG. **4**B illustrates the loading and selecting of recorded in-game actions in the game instance associated with Player **201**. Next to Friend $\mathbf{2}_1$'s player character is an option box, which informs Player **201** that Friend $\mathbf{2}_1$ previously accessed Player **201**'s Homestead and performed one or more in-game actions therein. The option box also gives Player **201** the choice to either "Accept Help!" or to "Dismiss." The game engine will also highlight any in-game actions that Friend $\mathbf{2}_1$ performed in-game actions on. Here, virtual peas **490** are highlighted in FIG. **4**B because Friend $\mathbf{2}_1$ fertilized the peas in FIG. **4**A. Note that virtual peas **490** have become fully-grown in FIG. **4**B. Between Friend $\mathbf{2}_1$'s game play in FIG. **4**A and Player **201**'s game play in FIG. **4**B, the game engine has completed the processing action on virtual peas **490** and has changed its game state appropriately, from growing to fully-grown. If Player **201** clicks on "Accept Help!", the game engine will play-back Friend $\mathbf{2}_1$'s in-game actions as illustrated in FIG. **4**A. If Player **201** clicks on "Dismiss," then Friend $\mathbf{2}_1$'s player character will disappear, Friend $\mathbf{2}_1$'s in-game actions as illustrated in FIG. **4**A will not be played back, and any game state changes associated with those in-game actions will not be implemented. Here, Player **201** clicks on "Accept Help!" in FIG. **4**B.

Once Player **201** initiated play-back by clicking "Accept Help!", the game engine can execute play-back by performing a variety of steps. The game engine can analyze the game state of the relevant in-game objects at the relevant times, analyze any relevant in-game actions performed on those in-game objects, and determine the appropriate in-game actions to perform on the in-game objects during play-back. At the earlier time illustrated in FIG. A, the virtual peas **490** were still in a processing action (i.e., it was growing). In FIGS. **4**B and **4**C, the processing action on the virtual peas **490** is complete (i.e., it is fully-grown) and is now ready for a player to perform a collecting action to harvest them. Consequently, the game state of virtual peas **490** has changed since Friend $\mathbf{2}_1$ performed her in-game action (fertilizing) on them. The game engine can analyze the change in game state and determine an appropriate in-game action to perform on virtual peas **490**. Because virtual peas **490** are now fully-grown, fertilizing virtual peas **490** is not consistent with the game logic of the online RPG and is therefore no longer an appropriate action. However, harvesting virtual peas **490** is consistent with the game logic and therefore appropriate. As such, based on the current game state of virtual peas **490**, the game engine can determine that the appropriate action to have Friend $\mathbf{2}_1$'s player character perform during play-back is a harvesting action, not a fertilizing action.

FIG. **4**C illustrates the execution of appropriate in-game actions by Friend $\mathbf{2}_1$'s player character in the game instance associated with Player **201**. After clicking on "Accept Help!", Friend $\mathbf{2}_1$'s player character moves over to virtual peas **490** and begins harvesting them, performing a collecting action. Here, even though Friend $\mathbf{2}_1$ is inactive, Friend $\mathbf{2}_1$'s player character is being controlled by the game engine and is able to perform in-game actions. The game engine will cause the game state of virtual peas **490** to change in response to the appropriate in-game action being performed by Friend $\mathbf{2}_1$'s player character. In this case, harvesting virtual peas **490** causes the virtual peas to disappear. It also causes Player **201** to receive certain in-game assets. These game state changes are recorded by the game engine on game networking system **120***b*.

Note that if the game state of virtual peas **490** had not changes between the time of Friend $\mathbf{2}_1$'s game play in FIG. **4**A and Player **201**'s game play in FIG. **4**B, the game engine would have determined that fertilizing virtual peas **490** was still an appropriate in-game action. Therefore, Friend $\mathbf{2}_1$ would have performed the same in-game action during playback at a later time.

Although this disclosure describes and illustrates asynchronous game play between two players in FIGS. **4**A-**4**C, this disclosure contemplates asynchronous game play between any number of players. Moreover, although this disclosure describes and illustrates particular game play in FIGS. **4**A-**4**C as occurring in a particular order, this disclosure contemplates any suitable game play occurring in any suitable order. Furthermore, although this disclosure describes and illustrates particular components carrying out particular game play in FIGS. **4**A-**4**C, this disclosure contemplates any suitable combination of any suitable components carrying out any suitable game play.

Data Flow

FIG. **5** illustrates an example data flow between the components of system **500**. In particular embodiments, system **500** can include client system **530**, social networking system **520***a*, and game networking system **520***b*. The components of system **500** can be connected to each other in any suitable configuration, using any suitable type of connection. The components may be connected directly or over any suitable network. Client system **530**, social networking system **520***a*, and game networking system **520***b* can each have one or more corresponding data stores such as local data store **535**, social data store **545**, and game data store **565**, respectively. Social networking system **520***a* and game networking system **520***b* can also have one or more servers that can communicate with client system **530** over an appropriate network. Social networking system **520***a* and game networking system **520***b* can have, for example, one or more internet servers for communicating with client system **530** via the Internet. Similarly, social networking system **520***a* and game networking system **520***b* can have one or more mobile servers for communicating with client system **530** via a mobile network (e.g., GSM, PCS, Wi-Fi, WPAN, etc.). In some embodiments, one server may be able to communicate with client system **530** over both the Internet and a mobile network. In other embodiments, separate servers can be used.

Client system **530** can receive and transmit data **523** to and from game networking system **520***b*. This data can include, for example, webpages, messages, game inputs, game displays, HTTP packets, data requests, transaction information, updates, and other suitable data. At some other time, or at the same time, game networking system **520***b* can communicate data **543**, **547** (e.g., game state information, game system account information, page info, messages, data requests, updates, etc.) with other networking systems, such as social networking system **520***a* (e.g., Facebook, Myspace, etc.). Client system **530** can also receive and transmit data **527** to and from social networking system **520***a*. This data can include, for example, webpages, messages, social graph information, social network displays, HTTP packets, data requests, transaction information, updates, and other suitable data.

Communication between client system **530**, social networking system **520***a*, and game networking system **520***b* can occur over any appropriate electronic communication medium or network using any suitable communications protocols. For example, client system **530**, as well as various servers of the systems described herein, may include Transport Control Protocol/Internet Protocol (TCP/IP) networking stacks to provide for datagram and transport functions. Of course, any other suitable network and transport layer protocols can be utilized.

In addition, hosts or end-systems described herein may use a variety of higher layer communications protocols, including client-server (or request-response) protocols, such as the HyperText Transfer Protocol (HTTP) and other communications protocols, such as HTTP-S, FTP, SNMP, TELNET, and a number of other protocols, may be used. In addition, a server in one interaction context may be a client in another interaction context. In particular embodiments, the information transmitted between hosts may be formatted as HyperText Markup Language (HTML) documents. Other structured document languages or formats can be used, such as XML, and the like. Executable code objects, such as JavaScript and ActionScript, can also be embedded in the structured documents.

In some client-server protocols, such as the use of HTML over HTTP, a server generally transmits a response to a request from a client. The response may comprise one or more data objects. For example, the response may comprise a first data object, followed by subsequently transmitted data objects. In particular embodiments, a client request may cause a server to respond with a first data object, such as an HTML page, which itself refers to other data objects. A client application, such as a browser, will request these additional data objects as it parses or otherwise processes the first data object.

In particular embodiments, an instance of an online game can be stored as a set of game state parameters that characterize the state of various in-game objects, such as, for example, player character state parameters, non-player character parameters, and virtual item parameters. In particular embodiments, game state is maintained in a database as a serialized, unstructured string of text data as a so-called Binary Large Object (BLOB). When a player accesses an online game on game networking system **520***b*, the BLOB containing the game state for the instance corresponding to the player can be transmitted to client system **530** for use by a client-side executed object to process. In particular embodiments, the client-side executable may be a FLASH-based game, which can de-serialize the game state data in the BLOB. As a player plays the game, the game logic implemented at client system **530** maintains and modifies the various game state parameters locally. The client-side game logic may also batch game events, such as mouse clicks, and transmit these events to game networking system **520***b*. Game networking system **520***b* may itself operate by retrieving a copy of the BLOB from a database or an intermediate memory cache (memcache) layer. Game networking system **520***b* can also de-serialize the BLOB to resolve the game state parameters and execute its own game logic based on the

events in the batch file of events transmitted by the client to synchronize the game state on the server side. Game networking system **520***b* may then re-serialize the game state, now modified, into a BLOB and pass this to a memory cache layer for lazy updates to a persistent database.

With a client-server environment in which the online games may run, one server system, such as game networking system **520***b*, may support multiple client systems **530**. At any given time, there may be multiple players at multiple client systems **530** all playing the same online game. In practice, the number of players playing the same game at the same time may be very large. As the game progresses with each player, multiple players may provide different inputs to the online game at their respective client systems **530**, and multiple client systems **530** may transmit multiple player inputs and/or game events to game networking system **520***b* for further processing. In addition, multiple client systems **530** may transmit other types of application data to game networking system **520***b*.

In particular embodiments, a computed-implemented game may be a text-based or turn-based game implemented as a series of web pages that are generated after a player selects one or more actions to perform. The web pages may be displayed in a browser client executed on client system **530**. As an example and not by way of limitation, a client application downloaded to client system **530** may operate to serve a set of webpages to a player. As another example and not by way of limitation, a computer-implemented game may be an animated or rendered game executable as a stand-alone application or within the context of a webpage or other structured document. In particular embodiments, the computer-implemented game may be implemented using Adobe Flash-based technologies. As an example and not by way of limitation, a game may be fully or partially implemented as a SWF object that is embedded in a web page and executable by a Flash media player plug-in. In particular embodiments, one or more described webpages may be associated with or accessed by social networking system **520***a*. This disclosure contemplates using any suitable application for the retrieval and rendering of structured documents hosted by any suitable network-addressable resource or website.

Application event data of a game is any data relevant to the game (e.g., player inputs). In particular embodiments, each application datum may have a name and a value, and the value of the application datum may change (i.e., be updated) at any time. When an update to an application datum occurs at client system **530**, either caused by an action of a game player or by the game logic itself, client system **530** may need to inform game networking system **520***b* of the update. For example, if the game is a farming game with a harvest mechanic (such as Zynga FarmVille), an event can correspond to a player clicking on a parcel of land to harvest a crop. In such an instance, the application event data may identify an event or action (e.g., harvest) and an object in the game to which the event or action applies. For illustration purposes and not by way of limitation, system **500** is discussed in reference to updating a multi-player online game hosted on a network-addressable system (such as, for example, social networking system **520***a* or game networking system **520***b*), where an instance of the online game is executed remotely on a client system **530**, which then transmits application event data to the hosting system such that the remote game server synchronizes game state associated with the instance executed by the client system **530**.

In particular embodiment, one or more objects of a game may be represented as an Adobe Flash object. Flash may manipulate vector and raster graphics, and supports bidirectional streaming of audio and video. "Flash" may mean the authoring environment, the player, or the application files. In particular embodiments, client system **530** may include a Flash client. The Flash client may be configured to receive and run Flash application or game object code from any suitable networking system (such as, for example, social networking system **520***a* or game networking system **520***b*). In particular embodiments, the Flash client may be run in a browser client executed on client system **530**. A player can interact with Flash objects using client system **530** and the Flash client. The Flash objects can represent a variety of in-game objects. Thus, the player may perform various in-game actions on various in-game objects by make various changes and updates to the associated Flash objects. In particular embodiments, in-game actions can be initiated by clicking or similarly interacting with a Flash object that represents a particular in-game object. For example, a player can interact with a Flash object to use, move, rotate, delete, attack, shoot, or harvest an in-game object. This disclosure contemplates performing any suitable in-game action by interacting with any suitable Flash object. In particular embodiments, when the player makes a change to a Flash object representing an in-game object, the client-executed game logic may update one or more game state parameters associated with the in-game object. To ensure synchronization between the Flash object shown to the player at client system **530**, the Flash client may send the events that caused the game state changes to the in-game object to game networking system **520***b*. However, to expedite the processing and hence the speed of the overall gaming experience, the Flash client may collect a batch of some number of events or updates into a batch file. The number of events or updates may be determined by the Flash client dynamically or determined by game networking system **520***b* based on server loads or other factors. For example, client system **530** may send a batch file to game networking system **520***b* whenever **50** updates have been collected or after a threshold period of time, such as every minute.

As used herein, the term "application event data" may refer to any data relevant to a computer-implemented game application that may affect one or more game state parameters, including, for example and without limitation, changes to player data or metadata, changes to player social connections or contacts, player inputs to the game, and events generated by the game logic. In particular embodiments, each application datum may have a name and a value. The value of an application datum may change at any time in response to the game play of a player or in response to the game engine (e.g., based on the game logic). In particular embodiments, an application data update occurs when the value of a specific application datum is changed. In particular embodiments, each application event datum may include an action or event name and a value (such as an object identifier). Thus, each application datum may be represented as a name-value pair in the batch file. The batch file may include a collection of name-value pairs representing the application data that have been updated at client system **530**. In particular embodiments, the batch file may be a text file and the name-value pairs may be in string format.

In particular embodiments, when a player plays an online game on client system **530**, game networking system **520***b* may serialize all the game-related data, including, for example and without limitation, game states, game events, user inputs, for this particular user and this particular game into a BLOB and stores the BLOB in a database. The BLOB may be associated with an identifier that indicates that the BLOB contains the serialized game-related data for a particu-

lar player and a particular online game. In particular embodiments, while a player is not playing the online game, the corresponding BLOB may be stored in the database. This enables a player to stop playing the game at any time without losing the current state of the game the player is in. When a player resumes playing the game next time, game networking system **520***b* may retrieve the corresponding BLOB from the database to determine the most-recent values of the game-related data. In particular embodiments, while a player is playing the online game, game networking system **520***b* may also load the corresponding BLOB into a memory cache so that the game system may have faster access to the BLOB and the game-related data contained therein.

Systems and Methods

In particular embodiments, one or more described webpages may be associated with a networking system or networking service. However, alternate embodiments may have application to the retrieval and rendering of structured documents hosted by any type of network addressable resource or web site. Additionally, as used herein, a user may be an individual, a group, or an entity (such as a business or third party application).

Particular embodiments may operate in a wide area network environment, such as the Internet, including multiple network addressable systems. FIG. **6** illustrates an example network environment, in which various example embodiments may operate. Network cloud **660** generally represents one or more interconnected networks, over which the systems and hosts described herein can communicate. Network cloud **660** may include packet-based wide area networks (such as the Internet), private networks, wireless networks, satellite networks, cellular networks, paging networks, and the like. As FIG. **6** illustrates, particular embodiments may operate in a network environment comprising one or more networking systems, such as social networking system **620***a*, game networking system **620***b*, and one or more client systems **630**. The components of social networking system **620***a* and game networking system **620***b* operate analogously; as such, hereinafter they may be referred to simply at networking system **620**. Client systems **630** are operably connected to the network environment via a network service provider, a wireless carrier, or any other suitable means.

Networking system **620** is a network addressable system that, in various example embodiments, comprises one or more physical servers **622** and data stores **624**. The one or more physical servers **622** are operably connected to computer network **660** via, by way of example, a set of routers and/or networking switches **626**. In an example embodiment, the functionality hosted by the one or more physical servers **122** may include web or HTTP servers, FTP servers, as well as, without limitation, webpages and applications implemented using Common Gateway Interface (CGI) script, PHP Hyper-text Preprocessor (PHP), Active Server Pages (ASP), Hyper Text Markup Language (HTML), Extensible Markup Language (XML), Java, JavaScript, Asynchronous JavaScript and XML (AJAX), Flash, ActionScript, and the like.

Physical servers **622** may host functionality directed to the operations of networking system **620**. Hereinafter servers **622** may be referred to as server **622**, although server **622** may include numerous servers hosting, for example, networking system **620**, as well as other content distribution servers, data stores, and databases. Data store **624** may store content and data relating to, and enabling, operation of networking system **620** as digital data objects. A data object, in particular embodiments, is an item of digital information typically stored or embodied in a data file, database, or record. Content objects may take many forms, including: text (e.g., ASCII, SGML, HTML), images (e.g., jpeg, tif and gif), graphics (vector-based or bitmap), audio, video (e.g., mpeg), or other multimedia, and combinations thereof. Content object data may also include executable code objects (e.g., games executable within a browser window or frame), podcasts, etc. Logically, data store **624** corresponds to one or more of a variety of separate and integrated databases, such as relational databases and object-oriented databases, that maintain information as an integrated collection of logically related records or files stored on one or more physical systems. Structurally, data store **624** may generally include one or more of a large class of data storage and management systems. In particular embodiments, data store **624** may be implemented by any suitable physical system(s) including components, such as one or more database servers, mass storage media, media library systems, storage area networks, data storage clouds, and the like. In one example embodiment, data store **624** includes one or more servers, databases (e.g., MySQL), and/or data warehouses. Data store **624** may include data associated with different networking system **620** users and/or client systems **630**.

Client system **630** is generally a computer or computing device including functionality for communicating (e.g., remotely) over a computer network. Client system **630** may be a desktop computer, laptop computer, personal digital assistant (PDA), in- or out-of-car navigation system, smart phone or other cellular or mobile phone, or mobile gaming device, among other suitable computing devices. Client system **630** may execute one or more client applications, such as a web browser (e.g., Microsoft Internet Explorer, Mozilla Firefox, Apple Safari, Google Chrome, and Opera), to access and view content over a computer network. In particular embodiments, the client applications allow a user of client system **630** to enter addresses of specific network resources to be retrieved, such as resources hosted by networking system **620**. These addresses can be Uniform Resource Locators (URLs) and the like. In addition, once a page or other resource has been retrieved, the client applications may provide access to other pages or records when the user "clicks" on hyperlinks to other resources. By way of example, such hyperlinks may be located within the webpages and provide an automated way for the user to enter the URL of another page and to retrieve that page.

A webpage or resource embedded within a webpage, which may itself include multiple embedded resources, may include data records, such as plain textual information, or more complex digitally encoded multimedia content, such as software programs or other code objects, graphics, images, audio signals, videos, and so forth. One prevalent markup language for creating webpages is the Hypertext Markup Language (HTML). Other common web browser-supported languages and technologies include the Extensible Markup Language (XML), the Extensible Hypertext Markup Language (XHTML), JavaScript, Flash, ActionScript, Cascading Style Sheet (CSS), and, frequently, Java. By way of example, HTML enables a page developer to create a structured document by denoting structural semantics for text and links, as well as images, web applications, and other objects that can be embedded within the page. Generally, a webpage may be delivered to a client as a static document; however, through the use of web elements embedded in the page, an interactive experience may be achieved with the page or a sequence of pages. During a user session at the client, the web browser interprets and displays the pages and associated resources received or retrieved from the website hosting the page, as well as, potentially, resources from other websites.

When a user at a client system **630** desires to view a particular webpage (hereinafter also referred to as target structured document) hosted by networking system **620**, the user's web browser, or other document rendering engine or suitable client application, formulates and transmits a request to networking system **620**. The request generally includes a URL or other document identifier as well as metadata or other information. By way of example, the request may include information identifying the user, such as a user ID, as well as information identifying or characterizing the web browser or operating system running on the user's client computing device **630**. The request may also include location information identifying a geographic location of the user's client system or a logical network location of the user's client system. The request may also include a timestamp identifying when the request was transmitted.

Although the example network environment described above and illustrated in FIG. **6** described with respect to social networking system **620***a* and game networking system **620***b*, this disclosure encompasses any suitable network environment using any suitable systems. As an example and not by way of limitation, the network environment may include online media systems, online reviewing systems, online search engines, online advertising systems, or any combination of two or more such systems.

FIG. **7** illustrates an example computing system architecture, which may be used to implement a server **622** or a client system **630**. In one embodiment, hardware system **700** comprises a processor **702**, a cache memory **704**, and one or more executable modules and drivers, stored on a tangible computer readable medium, directed to the functions described herein. Additionally, hardware system **700** may include a high performance input/output (I/O) bus **706** and a standard I/O bus **708**. A host bridge **710** may couple processor **702** to high performance I/O bus **706**, whereas I/O bus bridge **712** couples the two buses **706** and **708** to each other. A system memory **714** and one or more network/communication interfaces **716** may couple to bus **706**. Hardware system **700** may further include video memory (not shown) and a display device coupled to the video memory. Mass storage **718** and I/O ports **720** may couple to bus **708**. Hardware system **700** may optionally include a keyboard, a pointing device, and a display device (not shown) coupled to bus **708**. Collectively, these elements are intended to represent a broad category of computer hardware systems, including but not limited to general purpose computer systems based on the x86-compatible processors manufactured by Intel Corporation of Santa Clara, Calif., and the x86-compatible processors manufactured by Advanced Micro Devices (AMD), Inc., of Sunnyvale, Calif., as well as any other suitable processor.

The elements of hardware system **700** are described in greater detail below. In particular, network interface **716** provides communication between hardware system **700** and any of a wide range of networks, such as an Ethernet (e.g., IEEE 802.3) network, a backplane, etc. Mass storage **718** provides permanent storage for the data and programming instructions to perform the above-described functions implemented in servers **422**, whereas system memory **714** (e.g., DRAM) provides temporary storage for the data and programming instructions when executed by processor **702**. I/O ports **720** are one or more serial and/or parallel communication ports that provide communication between additional peripheral devices, which may be coupled to hardware system **700**.

Hardware system **700** may include a variety of system architectures and various components of hardware system **700** may be rearranged. For example, cache **704** may be on-chip with processor **702**. Alternatively, cache **704** and processor **702** may be packed together as a "processor module," with processor **702** being referred to as the "processor core." Furthermore, certain embodiments of the present disclosure may not require nor include all of the above components. For example, the peripheral devices shown coupled to standard I/O bus **708** may couple to high performance I/O bus **706**. In addition, in some embodiments, only a single bus may exist, with the components of hardware system **700** being coupled to the single bus. Furthermore, hardware system **700** may include additional components, such as additional processors, storage devices, or memories.

An operating system manages and controls the operation of hardware system **700**, including the input and output of data to and from software applications (not shown). The operating system provides an interface between the software applications being executed on the system and the hardware components of the system. Any suitable operating system may be used, such as the LINUX Operating System, the Apple Macintosh Operating System, available from Apple Computer Inc. of Cupertino, Calif., UNIX operating systems, Microsoft (r) Windows(r) operating systems, BSD operating systems, and the like. Of course, other embodiments are possible. For example, the functions described herein may be implemented in firmware or on an application-specific integrated circuit.

Furthermore, the above-described elements and operations can be comprised of instructions that are stored on non-transitory storage media. The instructions can be retrieved and executed by a processing system. Some examples of instructions are software, program code, and firmware. Some examples of non-transitory storage media are memory devices, tape, disks, integrated circuits, and servers. The instructions are operational when executed by the processing system to direct the processing system to operate in accord with the disclosure. The term "processing system" refers to a single processing device or a group of inter-operational processing devices. Some examples of processing devices are integrated circuits and logic circuitry. Those skilled in the art are familiar with instructions, computers, and storage media.

Miscellaneous

One or more features from any embodiment may be combined with one or more features of any other embodiment without departing from the scope of the disclosure.

A recitation of "a", "an," or "the" is intended to mean "one or more" unless specifically indicated to the contrary.

The present disclosure encompasses all changes, substitutions, variations, alterations, and modifications to the example embodiments herein that a person having ordinary skill in the art would comprehend. Similarly, where appropriate, the appended claims encompass all changes, substitutions, variations, alterations, and modifications to the example embodiments herein that a person having ordinary skill in the art would comprehend.

For example, the methods described herein may be implemented using hardware components, software components, and/or any combination thereof. By way of example, while embodiments of the present disclosure have been described as operating in connection with a networking website, various embodiments of the present disclosure can be used in connection with any communications facility that supports web applications. Furthermore, in some embodiments the term "web service" and "website" may be used interchangeably and additionally may refer to a custom or generalized API on a device, such as a mobile device (e.g., a cellular phone, smart phone, personal GPS, personal digital assistant, personal gaming device), that makes API calls directly to a server. The specification and drawings are, accordingly, to be regarded in

an illustrative rather than a restrictive sense. It will, however, be evident that various modifications and changes may be made thereunto without departing from the broader spirit and scope of the disclosure as set forth in the claims and that the disclosure is intended to cover all modifications and equivalents within the scope of the following claims.

What is claimed is:

1. A method comprising, by one or more computing devices:

accessing a record of one or more first in-game actions by a first player on one or more in-game objects in a game instance comprising a discrete game play area specific to a second player of a computer-implemented game at a first time;

responsive to a second in-game action by the second player, applying one or more third in-game actions based on one or more of the first in-game actions to one or more of the in-game objects in the game instance specific to the second player at a second time succeeding the first time;

generating to the second player a request to accept help from the first player;

playing back the one or more first in-game actions in response to receiving from the second player a confirmation to accept help from the first player; and

dismissing the one or more first in-game actions in response to receiving from the second player a dismissal to accept help from the first player.

2. The method of claim **1**, further comprising:

recording the one or more first in-game actions by the first player on the one or more in-game objects in the game instance at the first time.

3. The method of claim **2**, further comprising:

responsive to the one or more first in-game actions by the first player on the one or more in-game objects in the game instance at the first time, displaying to the first player one or more first changes in game state of one or more of the in-game objects; and

responsive to applying the one or more second in-game actions to one or more of the in-game objects in the game instance at the second time, displaying to the second player one or more second changes in game state of one or more of the in-game object.

4. The method of claim **1**, further comprising:

verifying that the one or more second in-game actions can be applied to one or more of the in-game objects in the game instance at the second time according to a game logic.

5. The method of claim **1**, further comprising:

determining appropriate changes in game state of one or more of the in-game objects in the game instance at the second time according to a game logic.

6. The method of claim **1**, further comprising:

determining the one or more second in-game actions based on a game state of the one or more in-game objects at the second time.

7. The method of claim **1**, wherein the one or more in-game objects have a first game state at the first time and a second game state at the second time.

8. The method of claim **7**, further comprising:

determining the one or more second in-game actions based on the second game state of the one or more in-game objects.

9. The method of claim **7**, wherein:

one or more of the first in-game actions by the first player on one or more of the in-game objects in the game instance at the first time cause one or more first changes in game state of one or more of the in-game object; and

applying the second in-game actions to one or more of the in-game objects in the game instance at the second time causes one or more second changes in game state of one or more of the in-game objects.

10. The method of claim **1**, wherein the first player and the second player are first-degree friends in a social network.

11. An apparatus, comprising:

one or more processors; and

a memory coupled to the processors comprising instructions executable by the processors, the processors operable when executing the instructions to:

access a record of one or more first in-game actions by a first player on one or more in-game objects in a game instance comprising a discrete game play area specific to a second player of a computer-implemented game at a first time;

responsive to a second in-game action by the second player, apply one or more third in-game actions based on one or more of the first in-game actions to one or more of the in-game objects in the game instance specific to the second player at a second time succeeding the first time;

generate to the second player a request to accept help from the first player;

playback the one or more first in-game actions in response to receiving from the second player a confirmation to accept help from the first player; and

dismiss the one or more first in-game actions in response to receiving from the second player a dismissal to accept help from the first player.

12. The apparatus of claim **11**, wherein the processors are further operable when executing the instructions to:

record the one or more first in-game actions by the first player on the one or more in-game objects in the game instance at the first time.

13. The apparatus of claim **12**, wherein the processors are further operable when executing the instructions to:

responsive to the one or more first in-game actions by the first player on the one or more in-game objects in the game instance at the first time, display to the first player one Or more first changes in game state of one or more of the in-game objects; and

responsive to applying the one or more second in-game actions to one or more of the in-game objects in the game instance at the second time, display to the second player one or more second changes in game state of one or more of the in-game object.

14. The apparatus of claim **11**, wherein the processors are further operable when executing the instructions to:

verify that the one or more second in-game actions can be applied to one or more of the in-game objects in the game instance at the second time according to a game logic.

15. The apparatus of claim **11**, wherein the processors are further operable when executing the instructions to:

determine appropriate changes in game state of one or more of the in-game objects in the game instance at the second time according to a game logic.

16. The apparatus of claim **11**, wherein the processors are further operable when executing the instructions to:

determine the one or more second in-game actions based on a game state of the one or more in-game objects at the second time.

17. The apparatus of claim **11**, wherein the one or more in-game objects have a first game state at the first time and a second game state at the second time.

18. The apparatus of claim **17**, wherein the processors are further operable when executing the instructions to:

determine the one or more second in-game actions based on the second game state of the one or more in-game objects.

19. The apparatus of claim **17**, wherein:

one or more of the first in-game actions by the first player on one or more of the in-game objects in the game instance at the first time cause one or more first changes in game state of one or more of the in-game object; and

applying the second in-game actions to one or more of the in-game objects in the game instance at the second time causes one or more second changes in game state of one or more of the in-game objects.

20. The apparatus of claim **11**, wherein the first player and the second player are first-degree friends in a social network.

* * * * *

UNITED STATES PATENT AND TRADEMARK OFFICE

CERTIFICATE OF CORRECTION

PATENT NO. : 8,287,341 B1
APPLICATION NO. : 12/904722
DATED : October 16, 2012
INVENTOR(S) : Reynolds et al.

It is certified that error appears in the above-identified patent and that said Letters Patent is hereby corrected as shown below:

In column 26, line 42, in Claim 13, delete "Or" and insert --or--, therefor

In column 28, line 2, in Claim 19, delete "object" and insert --objects--, therefor

Signed and Sealed this
Twenty-sixth Day of February, 2013

Teresa Stanek Rea
Acting Director of the United States Patent and Trademark Office