US 20040150747A1

(19) United States

(12) Patent Application Publication

(10) Pub. No.: US 2004/0150747 A1

(43) Pub. Date: Aug. 5, 2004

Sita

(54) **HDTV DOWNCONVERSION SYSTEM**

(76) Inventor: **Richard Sita**, Audubon, NJ (US)

Correspondence Address:
RATNERPRESTIA
P O BOX 980
VALLEY FORGE, PA 19482-0980 (US)

(21) Appl. No.: **10/672,773**

(22) Filed: **Sep. 26, 2003**

Related U.S. Application Data

(62) Division of application No. 09/180,243, filed on Apr. 5, 1999, filed as 371 of international application No. PCT/US98/04749, filed on Mar. 11, 1998.

(60) Provisional application No. 60/040,517, filed on Mar. 12, 1997.

Publication Classification

(51) **Int. Cl.**[7] **H04N 3/27**

(52) **U.S. Cl.** **348/558**; 348/554

(57) **ABSTRACT**

A video monitor including circuitry that provides information regarding characteristics of the monitor to an external video source. The circuitry may be a register that holds data from which the aspect ratio and resolution of the display may be derived.

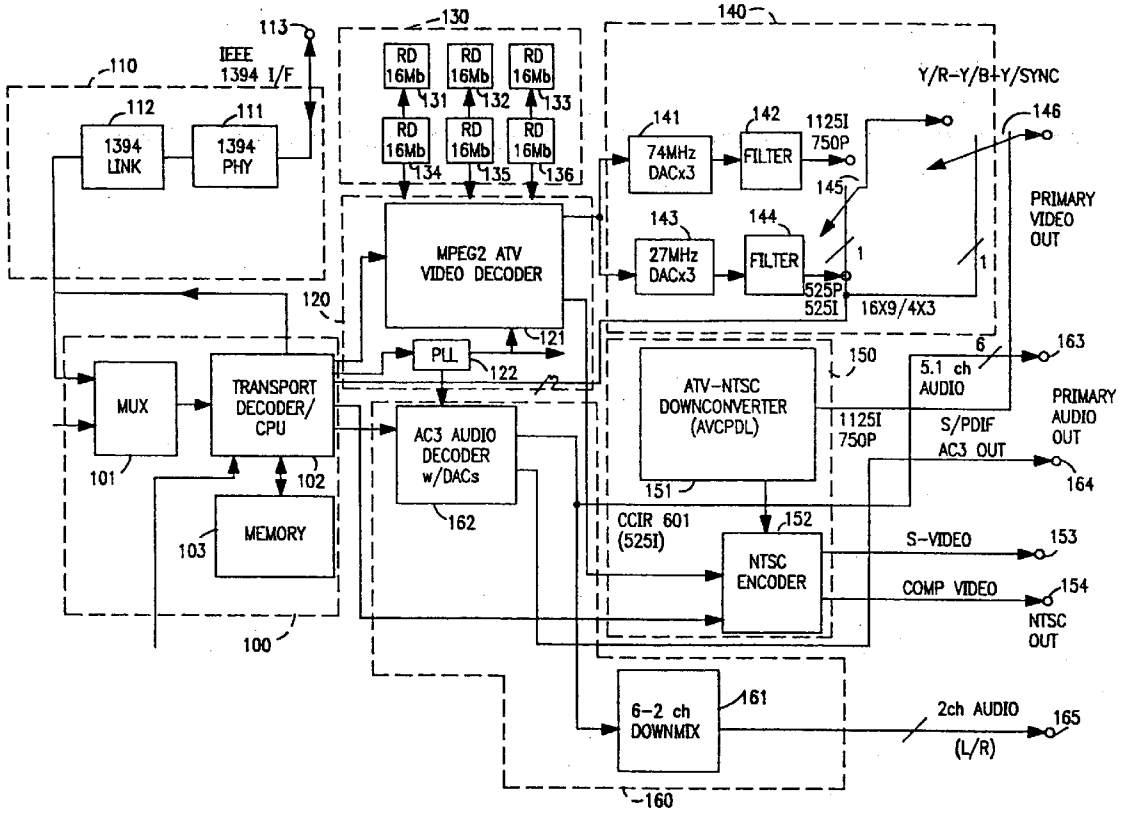

TCL-1008
TTE Technology Inc. d/b/a TCL North America v. InterDigital, Inc. IPR2026-00417
AMAZON-1008
Amazon v. InterDigital, IPR2026-00195

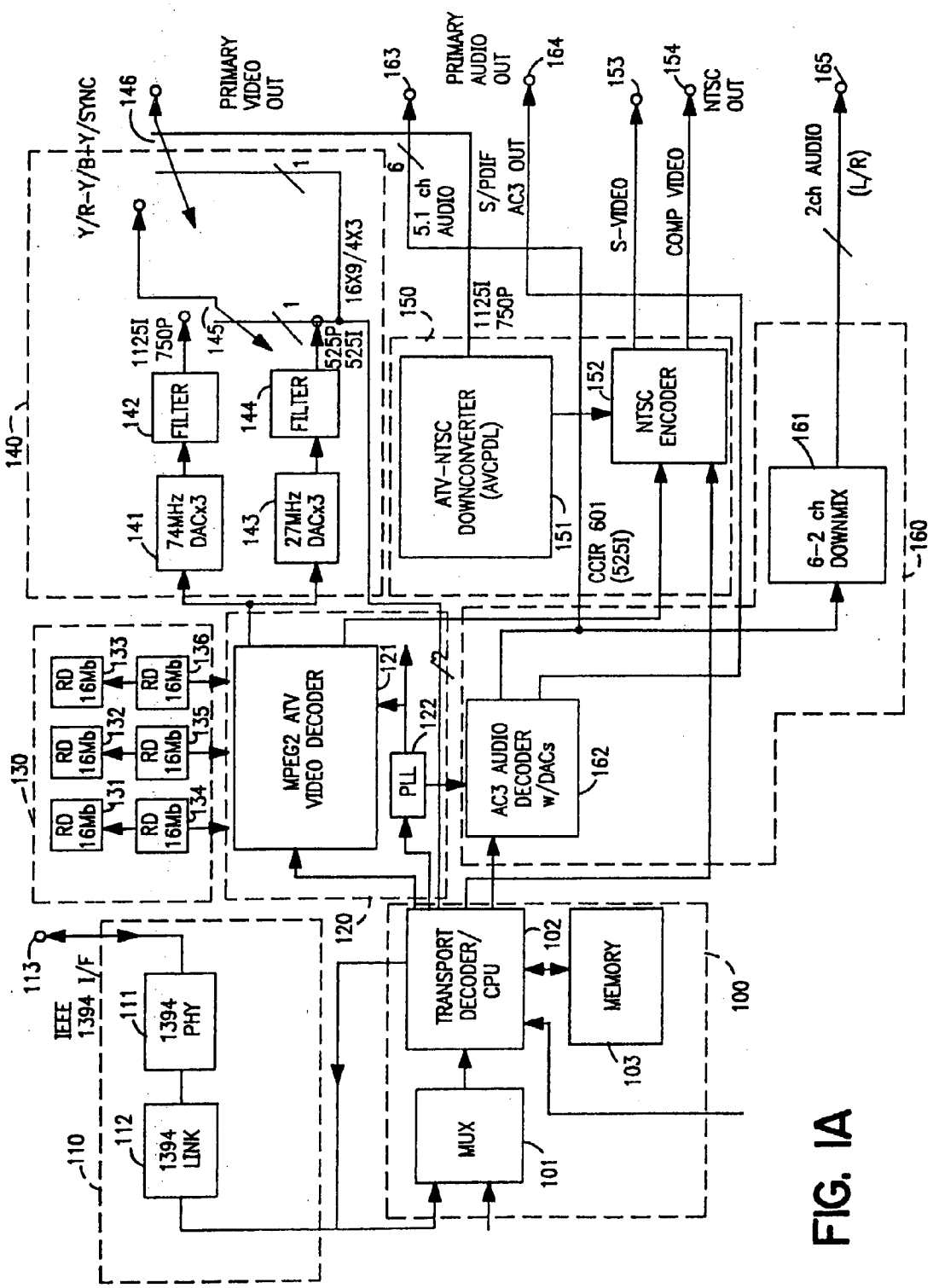
Y/R-Y/B+Y/SYNC
146
PRIMARY VIDEO OUT
163
PRIMARY AUDIO OUT
164
153
154
NTSC OUT
165
5.1 ch AUDIO
S/PDIF AC3 OUT
S-VIDEO
COMP VIDEO
2ch AUDIO (L/R)
16X9/4X3
1125I 750P
145
525P 525I
FILTER
142
FILTER
144
74MHz DACx3
141
27MHz DACx3
143
140
150
1125I 750P
ATV-NTSC DOWNCONVERTER (AVCPDL)
151
152
NTSC ENCODER
CCIR 601 (525I)
161
6-2 ch DOWNMIX
160
RD 16Mb
131
132
133
134
135
136
130
MPEG2 ATV VIDEO DECODER
121
122
PLL
AC3 AUDIO DECODER w/DACs
162
120
113
IEEE 1394 I/F
1394 PHY
111
1394 LINK
112
110
TRANSPORT DECODER/ CPU
102
MEMORY
103
MUX
101
100

FIG. 1A

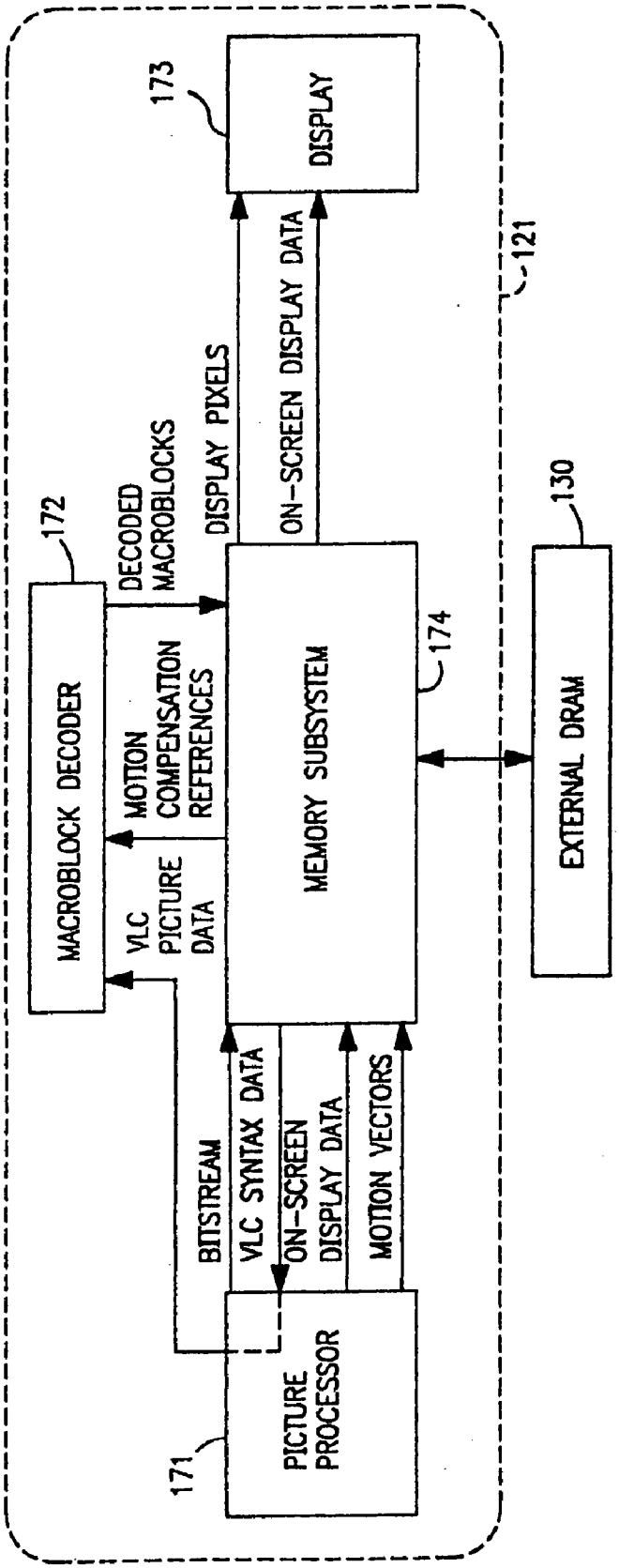
173
DISPLAY
121
DISPLAY PIXELS
ON-SCREEN DISPLAY DATA
172
DECODED MACROBLOCKS
130
MACROBLOCK DECODER
MOTION COMPENSATION REFERENCES
MEMORY SUBSYSTEM
174
EXTERNAL DRAM
VLC PICTURE DATA
BITSTREAM
VLC SYNTAX DATA
ON-SCREEN DISPLAY DATA
MOTION VECTORS
PICTURE PROCESSOR
171

FIG. 1B

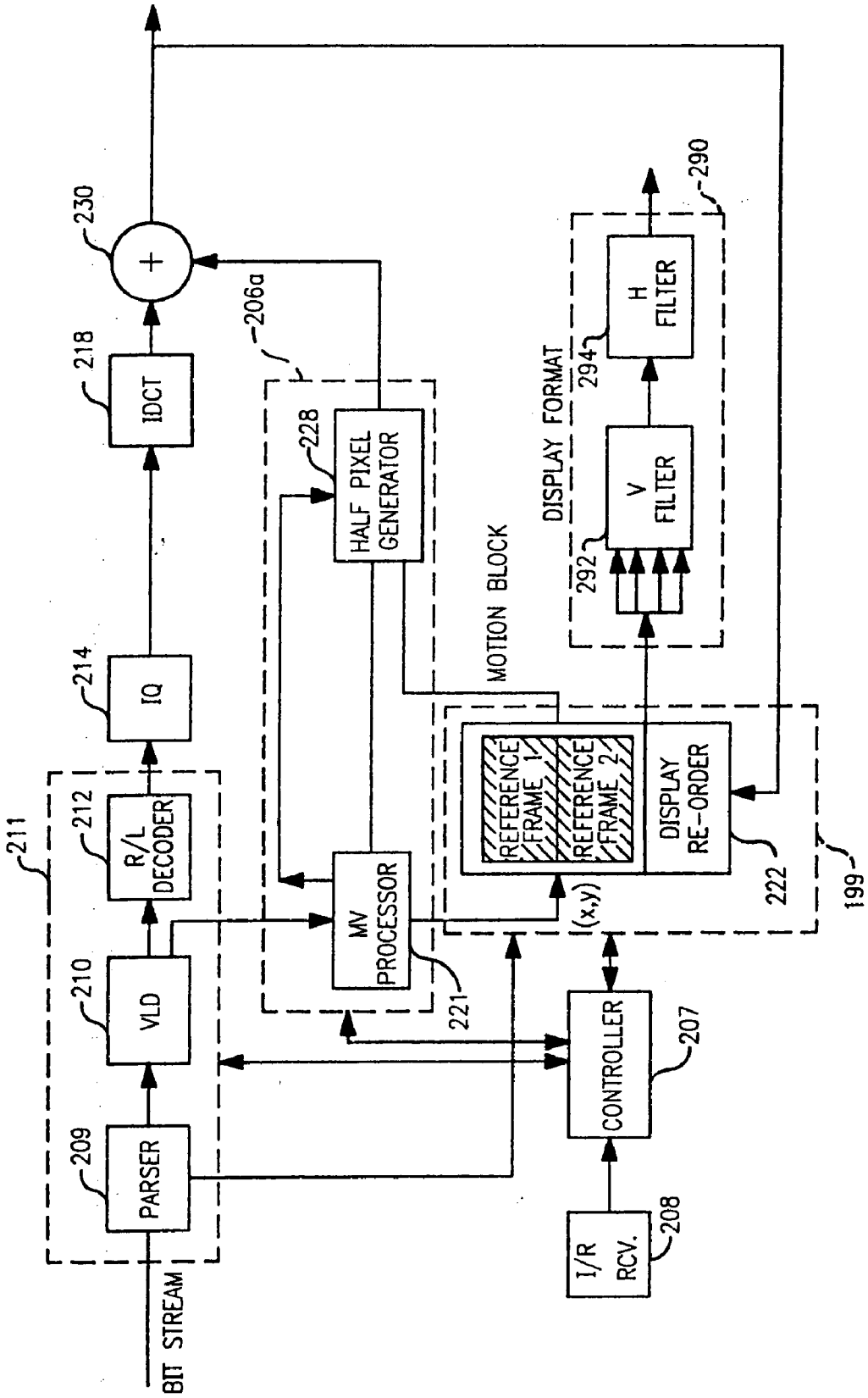
BIT STREAM
PARSER
209
VLD
210
R/L DECODER
212
211
IQ
214
IDCT
218
230
206a
HALF PIXEL GENERATOR
228
MV PROCESSOR
221
MOTION BLOCK
REFERENCE FRAME 1
REFERENCE FRAME 2
DISPLAY RE-ORDER
222
199
(x,y)
DISPLAY FORMAT
V FILTER
292
H FILTER
294
290
CONTROLLER
207
I/R RCV.
208

FIG. 2A

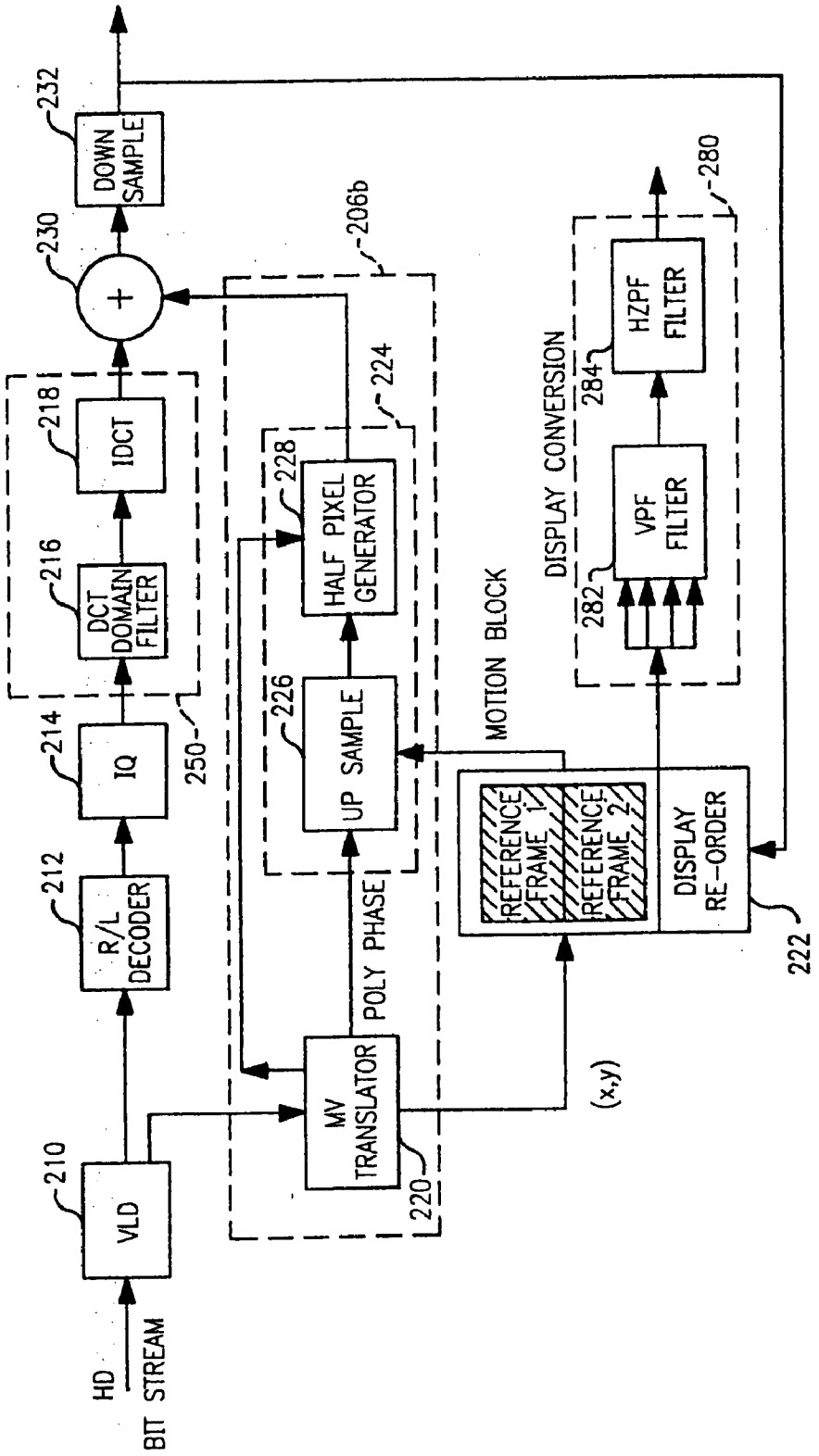
HD
BIT STREAM
VLD
210
R/L DECODER
212
IQ
214
DCT DOMAIN FILTER
216
IDCT
218
250
230
+
DOWN SAMPLE
232
206b
224
228
HALF PIXEL GENERATOR
226
UP SAMPLE
POLY PHASE
MV TRANSLATOR
220
(x,y)
MOTION BLOCK
REFERENCE FRAME 1
REFERENCE FRAME 2
DISPLAY RE-ORDER
222
DISPLAY CONVERSION
282
VPF FILTER
284
HZPF FILTER
280

FIG. 2B

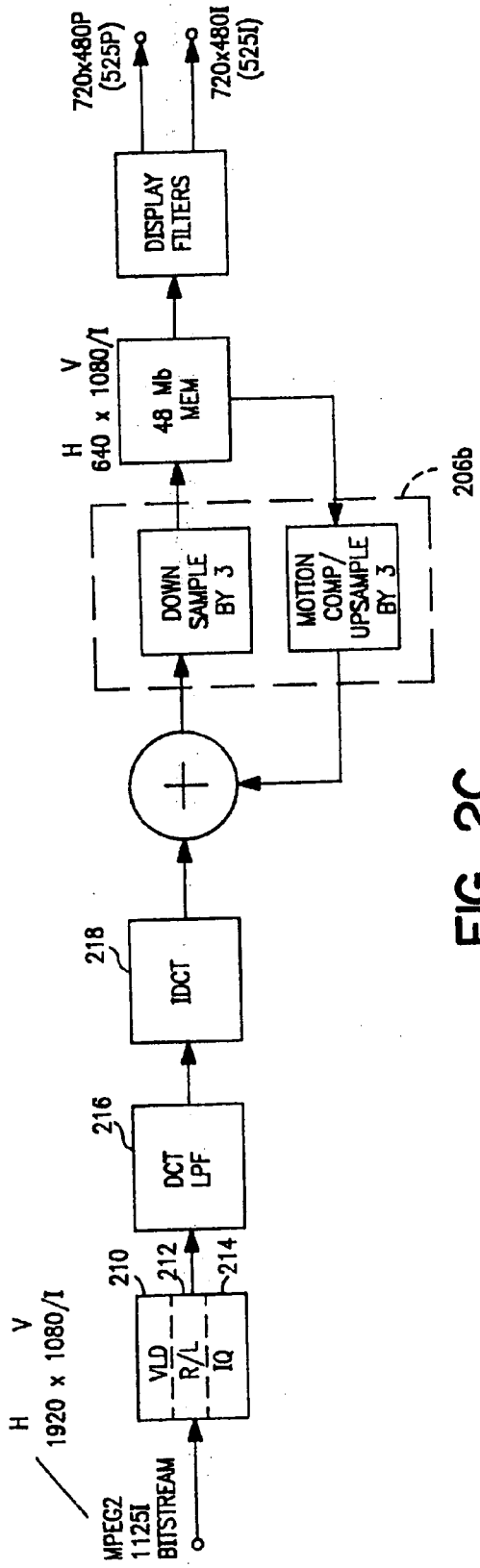
MPEG2
1125I
BITSTREAM
H
1920 x 1080/I
V
VLD
R/L
IQ
210
212
214
DCT
LPF
216
IDCT
218
DOWN
SAMPLE
BY 3
MOTION
COMP/
UPSAMPLE
BY 3
206b
H
640 x 1080/I
V
48 Mb
MEM
DISPLAY
FILTERS
720x480P
(525P)
720x480I
(525I)

FIG. 2C

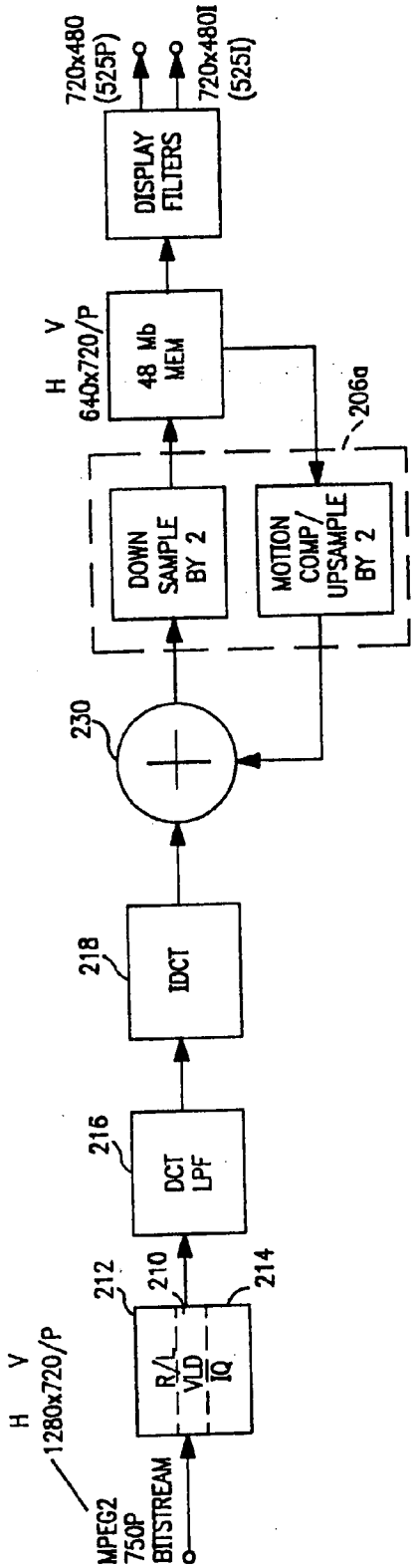
MPEG2
750P
BITSTREAM
H
1280x720/P
V
R/L
VLD
IQ
212
210
214
DCT
LPF
216
IDCT
218
230
DOWN
SAMPLE
BY 2
MOTION
COMP/
UPSAMPLE
BY 2
206a
H
640x720/P
V
48 Mb
MEM
DISPLAY
FILTERS
720x480
(525P)
720x480I
(525I)

FIG. 2D

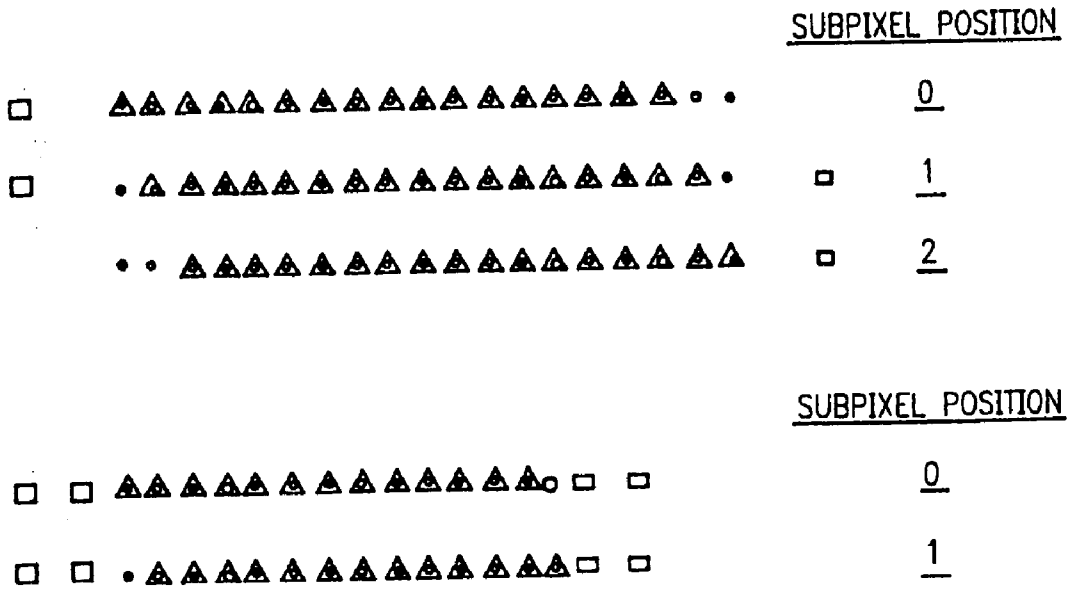

FIG. 3A

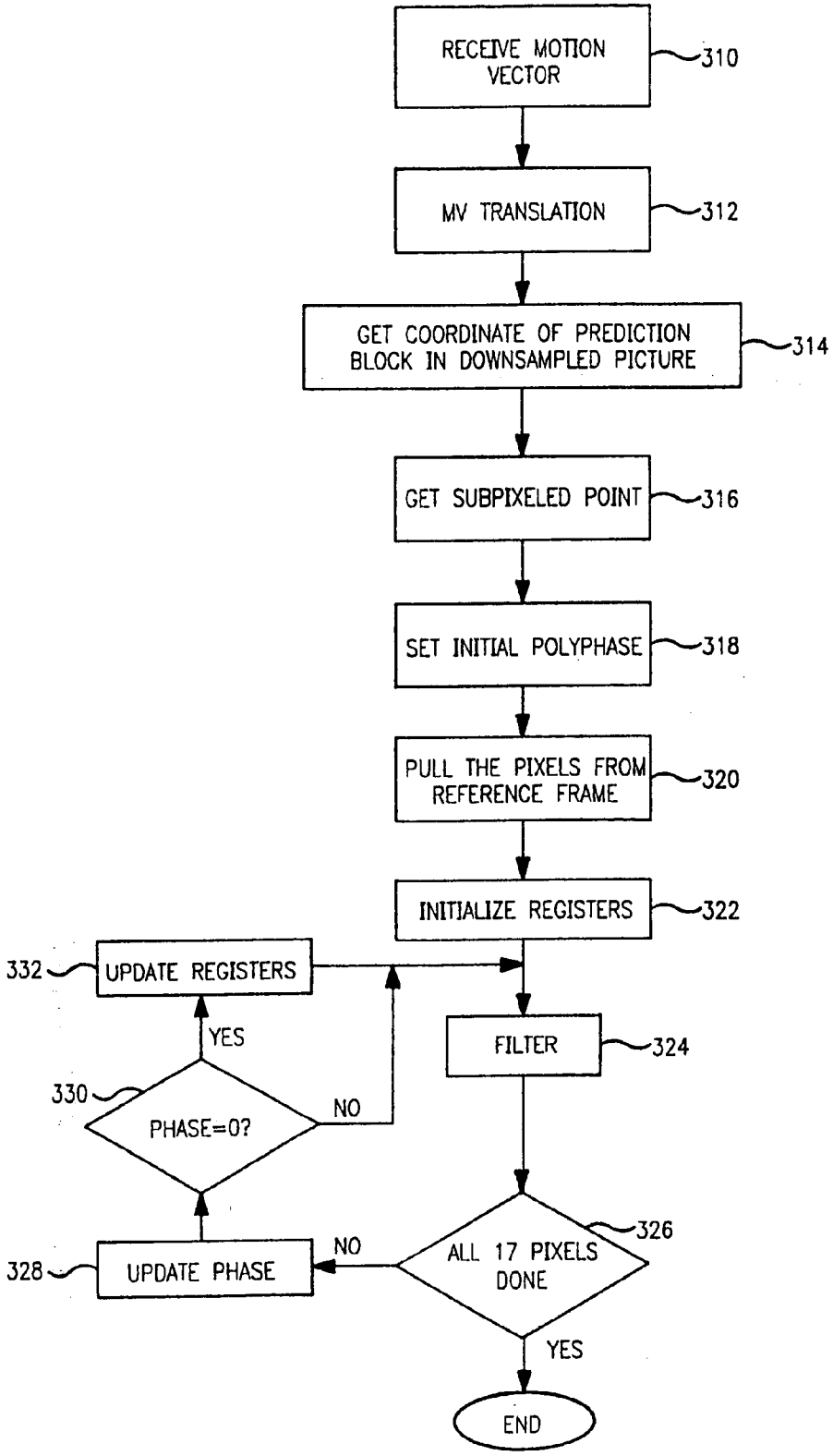
RECEIVE MOTION VECTOR
310
MV TRANSLATION
312
GET COORDINATE OF PREDICTION BLOCK IN DOWNSAMPLED PICTURE
314
GET SUBPIXELED POINT
316
SET INITIAL POLYPHASE
318
PULL THE PIXELS FROM REFERENCE FRAME
320
INITIALIZE REGISTERS
322
332
UPDATE REGISTERS
YES
FILTER
324
330
PHASE=0?
NO
326
ALL 17 PIXELS DONE
NO
328
UPDATE PHASE
YES
END

FIG. 3B

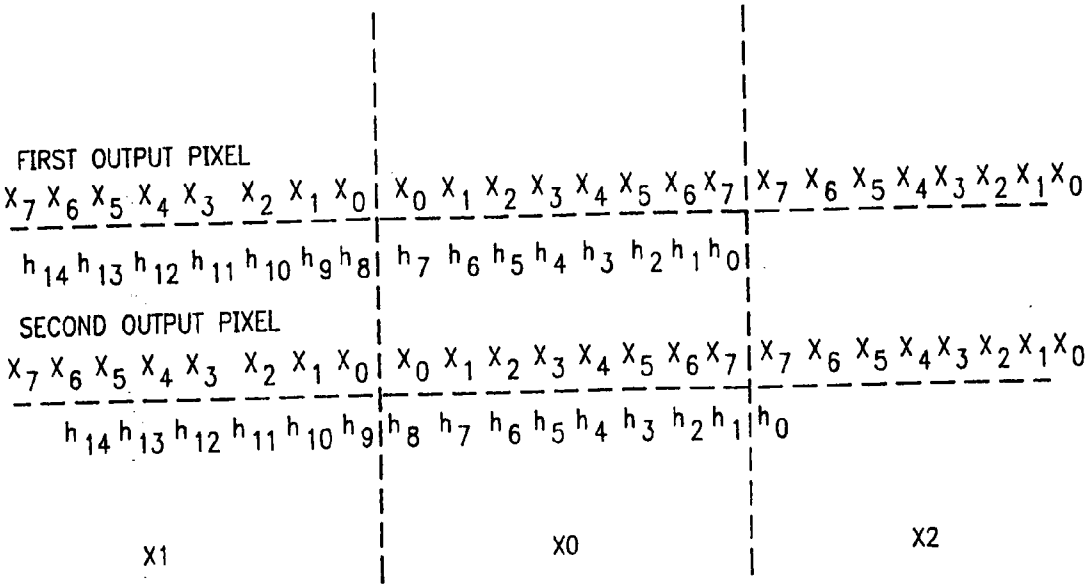
FIRST OUTPUT PIXEL
x_7 x_6 x_5 x_4 x_3 x_2 x_1 x_0 x_0 x_1 x_2 x_3 x_4 x_5 x_6 x_7 x_7 x_6 x_5 x_4 x_3 x_2 x_1 x_0
h_{14} h_{13} h_{12} h_{11} h_{10} h_9 h_8 h_7 h_6 h_5 h_4 h_3 h_2 h_1 h_0
SECOND OUTPUT PIXEL
x_7 x_6 x_5 x_4 x_3 x_2 x_1 x_0 x_0 x_1 x_2 x_3 x_4 x_5 x_6 x_7 x_7 x_6 x_5 x_4 x_3 x_2 x_1 x_0
h_{14} h_{13} h_{12} h_{11} h_{10} h_9 h_8 h_7 h_6 h_5 h_4 h_3 h_2 h_1 h_0
X1
X0
X2

FIG. 4

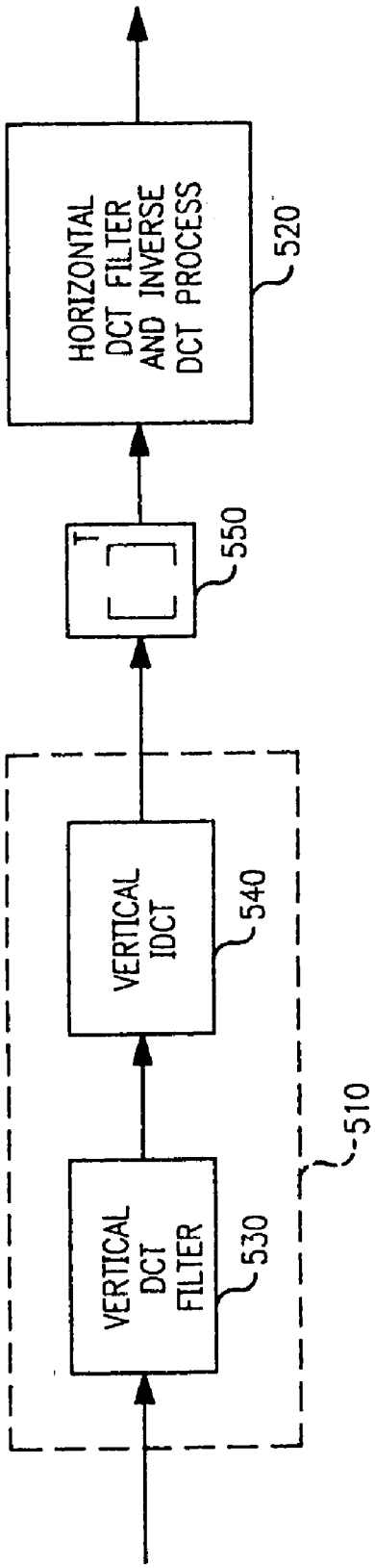
VERTICAL DCT FILTER
530
VERTICAL IDCT
540
510
550
HORIZONTAL DCT FILTER AND INVERSE DCT PROCESS
520

FIG. 5

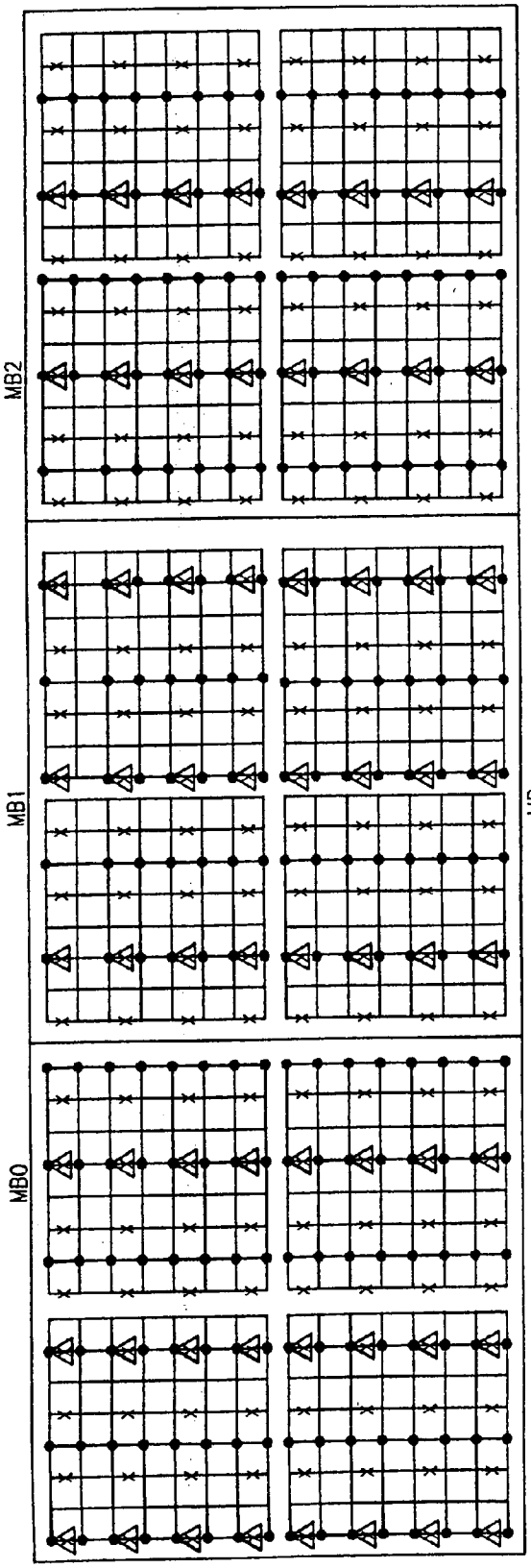

FIG. 6A

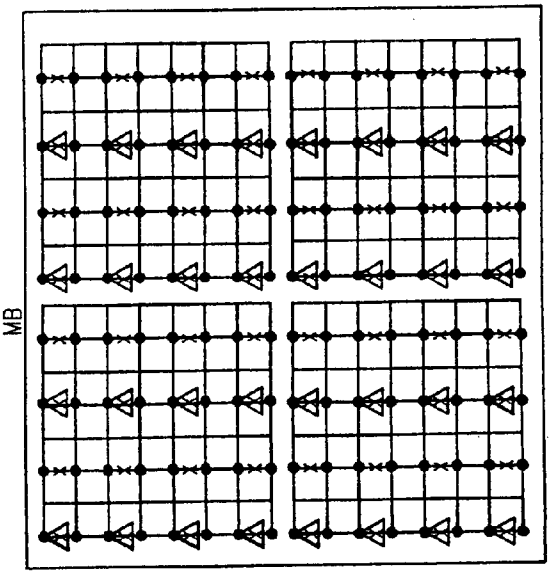

FIG. 6B

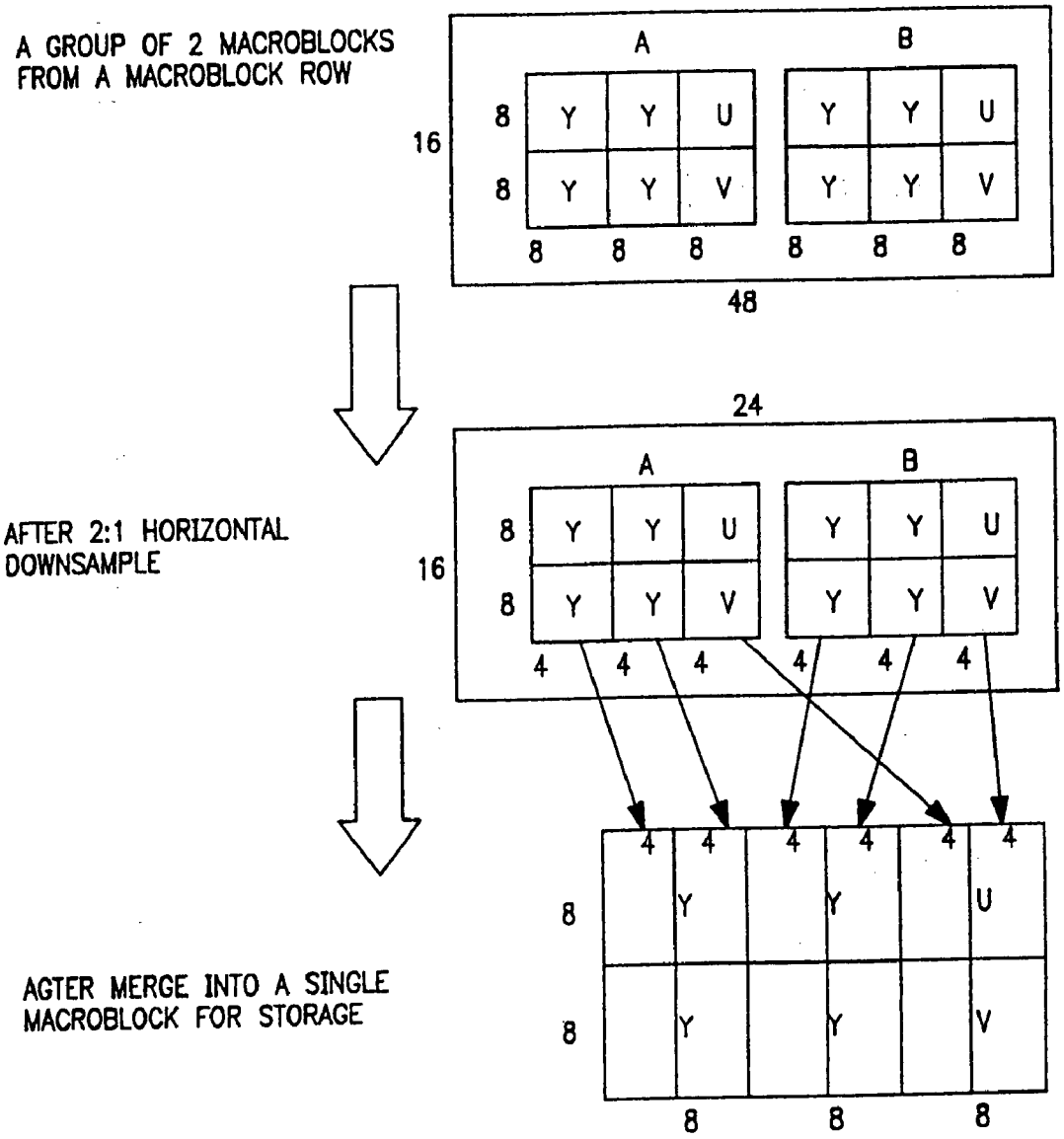
A GROUP OF 2 MACROBLOCKS FROM A MACROBLOCK ROW
A
B
Y
U
V
16
8
48
24
AFTER 2:1 HORIZONTAL DOWNSAMPLE
4
AGTER MERGE INTO A SINGLE MACROBLOCK FOR STORAGE

FIG. 6C

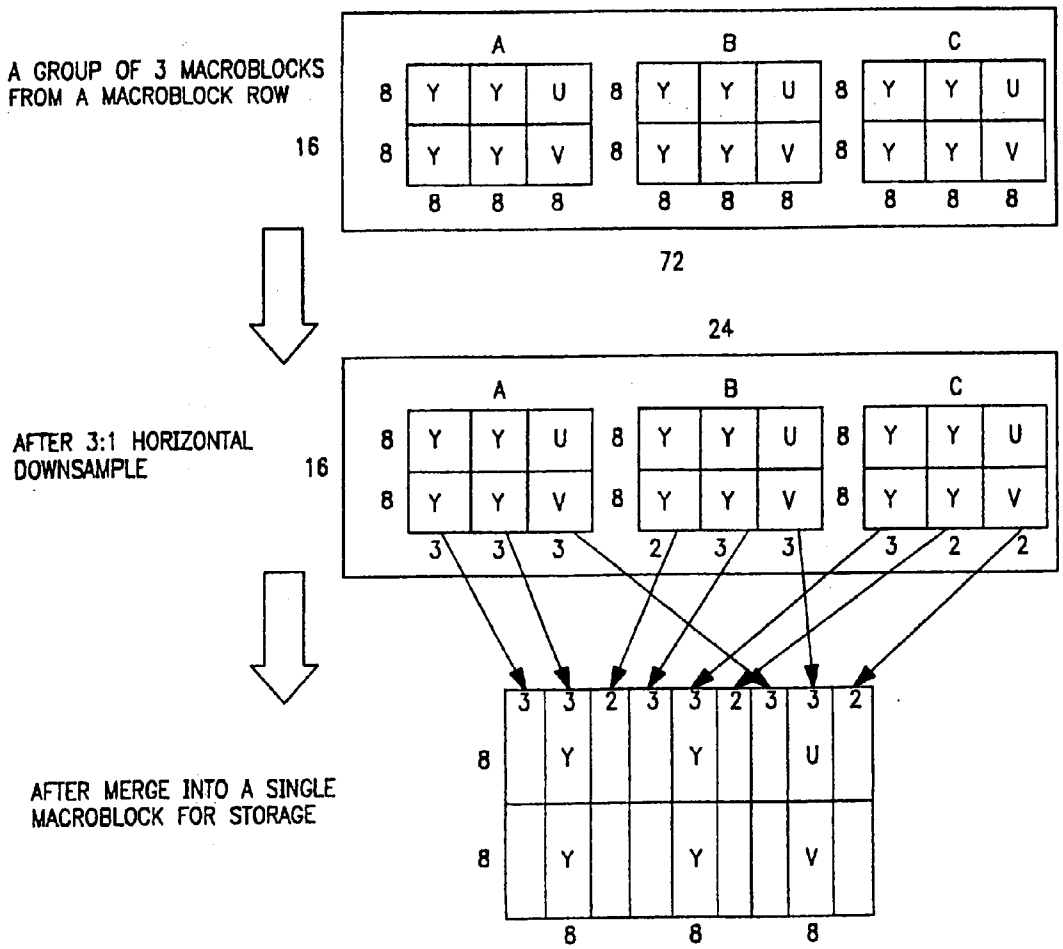
A GROUP OF 3 MACROBLOCKS FROM A MACROBLOCK ROW
A
B
C
Y
U
V
8
16
72
24
AFTER 3:1 HORIZONTAL DOWNSAMPLE
3
2
AFTER MERGE INTO A SINGLE MACROBLOCK FOR STORAGE

FIG. 6D

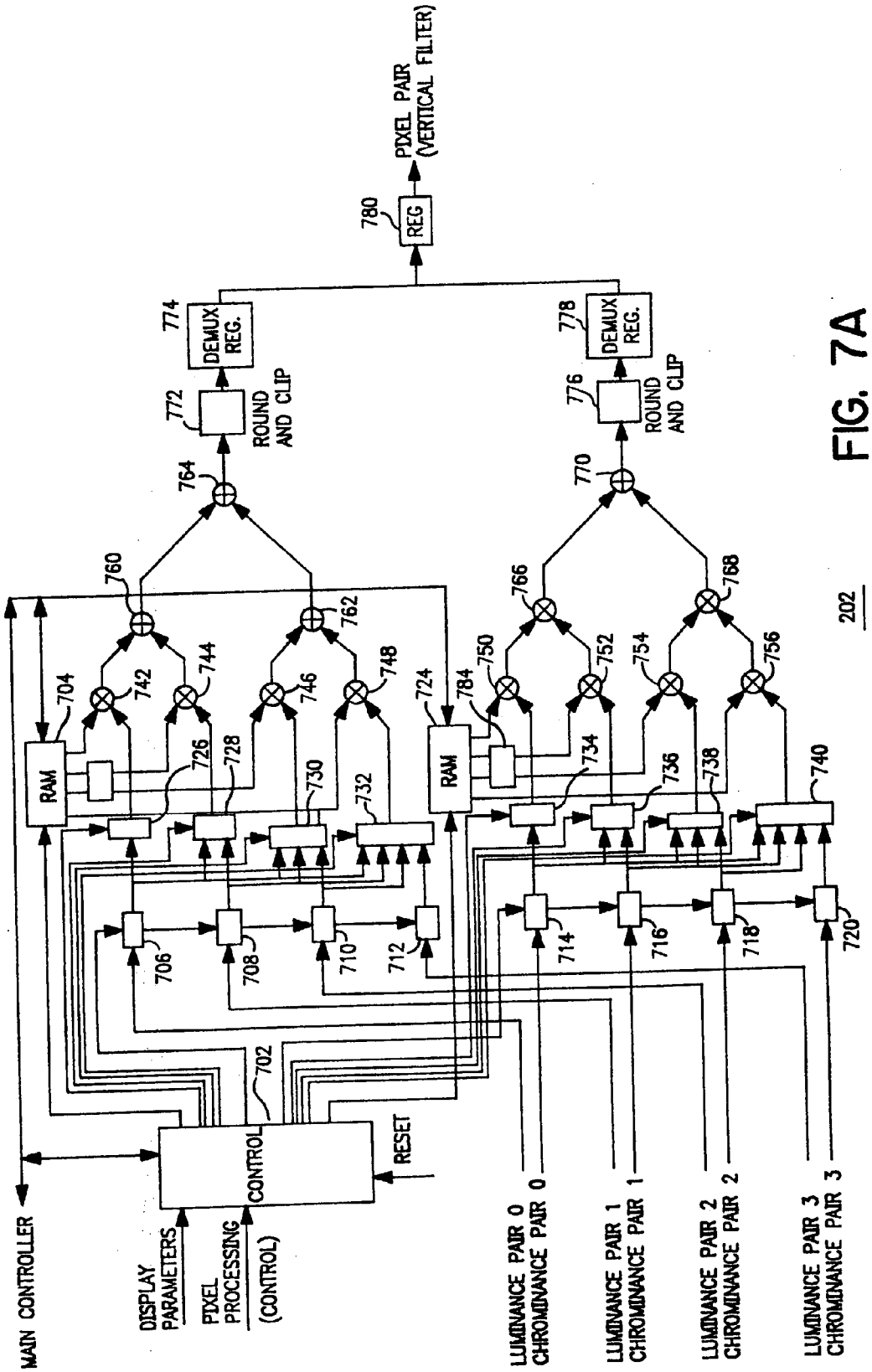
MAIN CONTROLLER
DISPLAY PARAMETERS
PIXEL PROCESSING (CONTROL)
CONTROL
RESET
RAM
RAM
LUMINANCE PAIR 0 CHROMINANCE PAIR 0
LUMINANCE PAIR 1 CHROMINANCE PAIR 1
LUMINANCE PAIR 2 CHROMINANCE PAIR 2
LUMINANCE PAIR 3 CHROMINANCE PAIR 3
ROUND AND CLIP
ROUND AND CLIP
DEMUX REG.
DEMUX REG.
REG
PIXEL PAIR (VERTICAL FILTER)
202

FIG. 7A

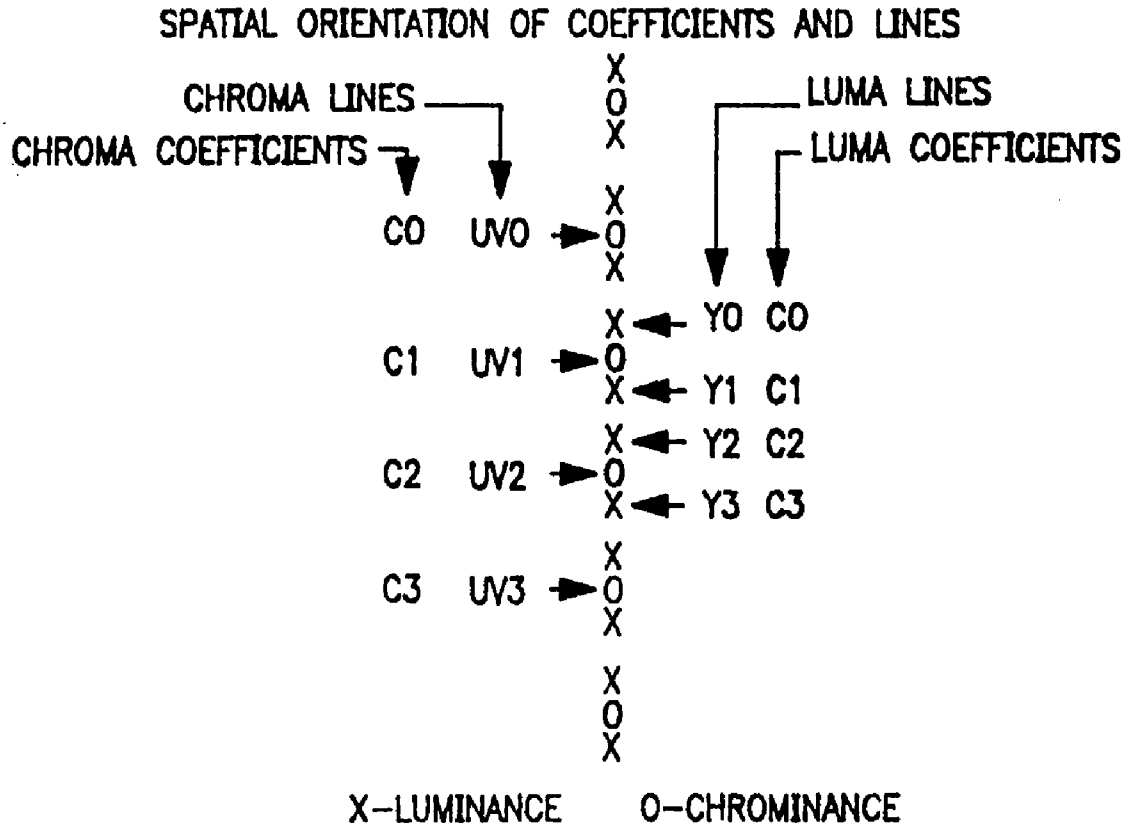
SPATIAL ORIENTATION OF COEFFICIENTS AND LINES
CHROMA LINES
CHROMA COEFFICIENTS
LUMA LINES
LUMA COEFFICIENTS
C0 UV0
C1 UV1
C2 UV2
C3 UV3
Y0 C0
Y1 C1
Y2 C2
Y3 C3
X-LUMINANCE
O-CHROMINANCE

FIG. 7B

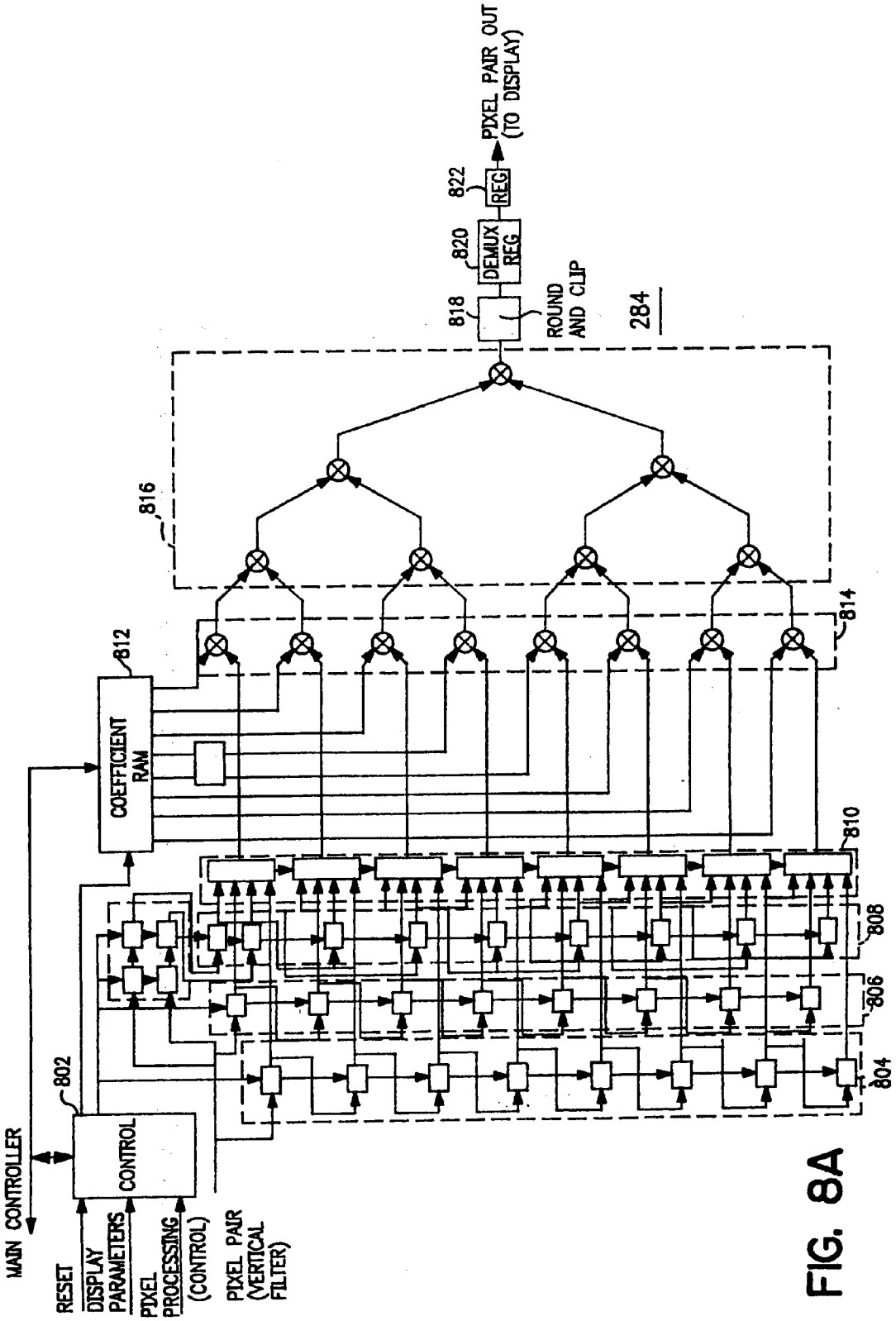
MAIN CONTROLLER
RESET
DISPLAY PARAMETERS
PIXEL PROCESSING (CONTROL)
PIXEL PAIR (VERTICAL FILTER)
802
CONTROL
COEFFICIENT RAM
812
816
814
810
808
806
804
818
ROUND AND CLIP
820
DEMUX REG
822
REG
PIXEL PAIR OUT (TO DISPLAY)
284

FIG. 8A

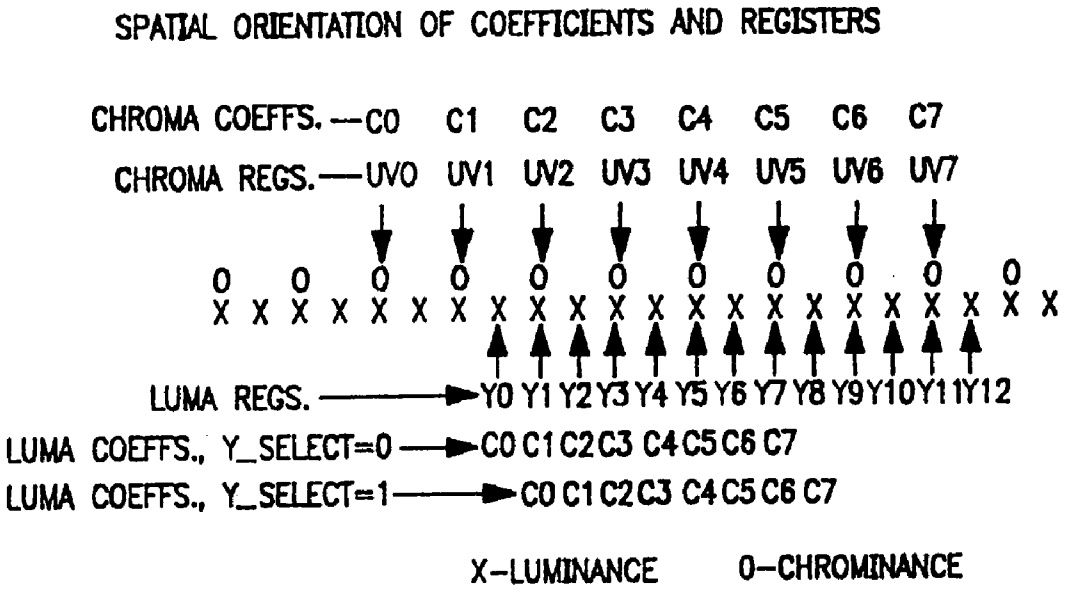
SPATIAL ORIENTATION OF COEFFICIENTS AND REGISTERS
CHROMA COEFFS. — C0 C1 C2 C3 C4 C5 C6 C7
CHROMA REGS. — UV0 UV1 UV2 UV3 UV4 UV5 UV6 UV7
0 0 0 0 0 0 0 0 0 0 0
X X X X X X X X X X X X X X X X X X X X X
LUMA REGS. — Y0 Y1 Y2 Y3 Y4 Y5 Y6 Y7 Y8 Y9 Y10 Y11 Y12
LUMA COEFFS., Y_SELECT=0 — C0 C1 C2 C3 C4 C5 C6 C7
LUMA COEFFS., Y_SELECT=1 — C0 C1 C2 C3 C4 C5 C6 C7
X-LUMINANCE
0-CHROMINANCE

FIG. 8B

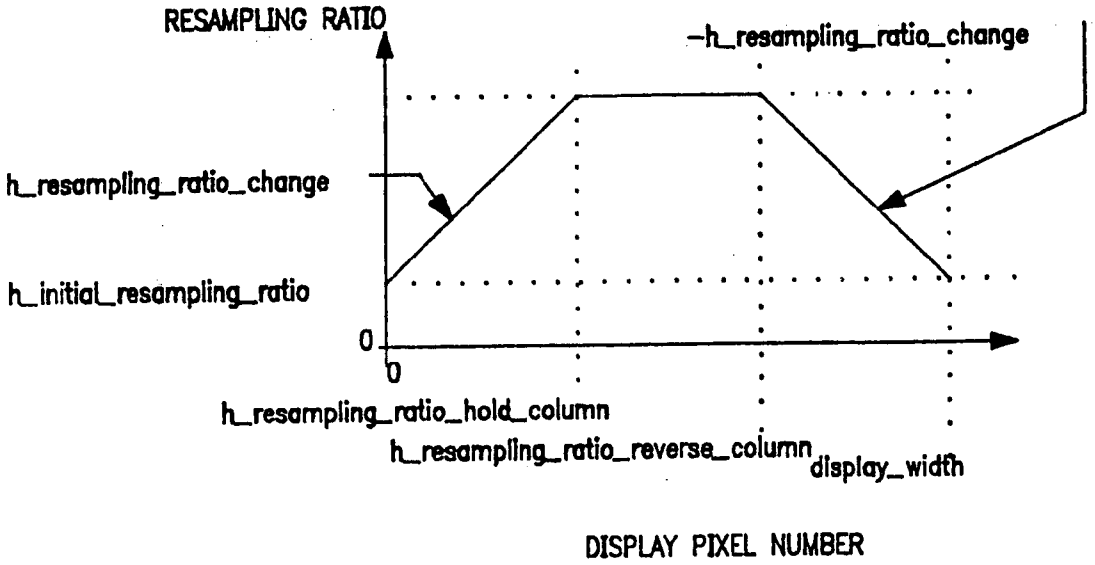
RESAMPLING RATIO
-h_resampling_ratio_change
h_resampling_ratio_change
h_initial_resampling_ratio
0
0
h_resampling_ratio_hold_column
h_resampling_ratio_reverse_column
display_width
DISPLAY PIXEL NUMBER

FIG. 9A

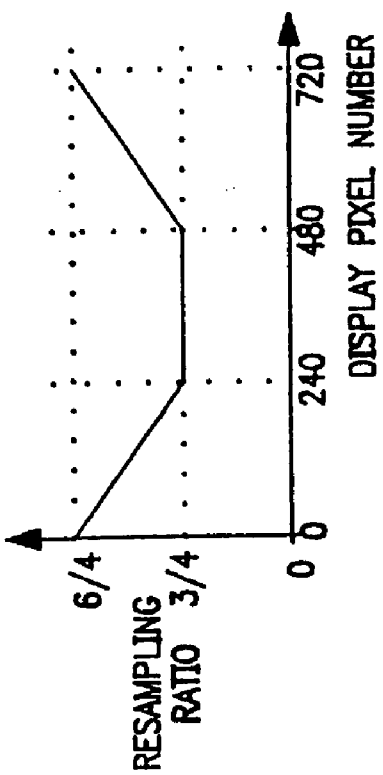

FIG. 9D

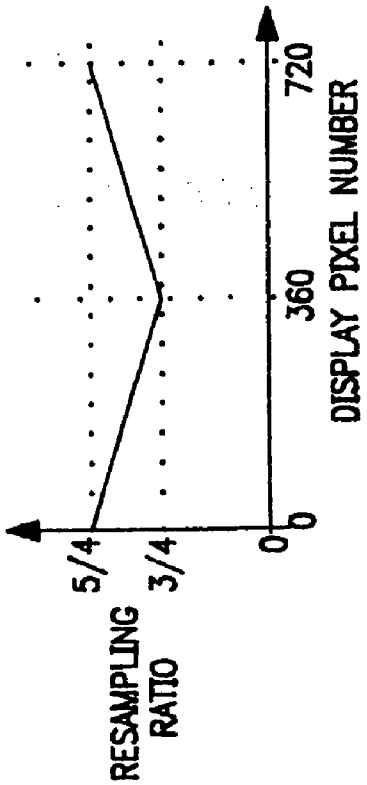

FIG. 9E

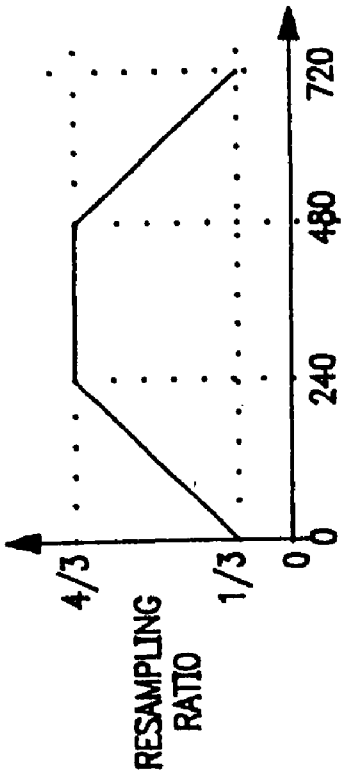

FIG. 9B

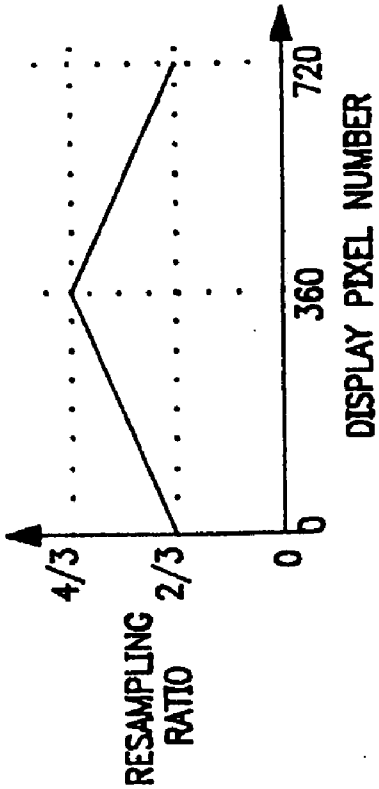

FIG. 9C

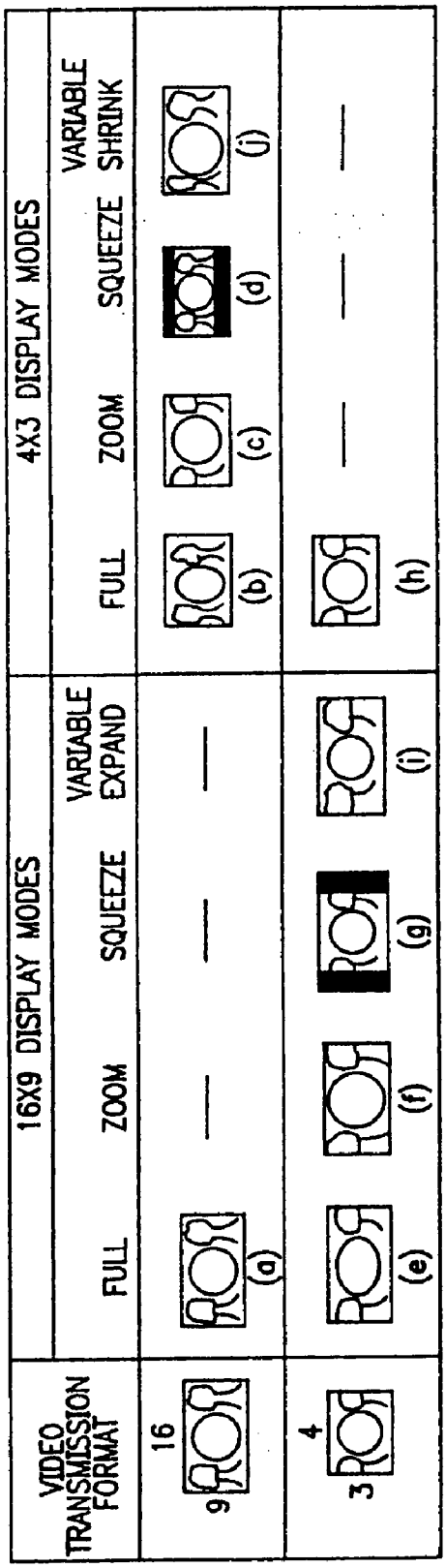
VIDEO TRANSMISSION FORMAT
16X9 DISPLAY MODES
FULL
ZOOM
SQUEEZE
VARIABLE EXPAND
4X3 DISPLAY MODES
FULL
ZOOM
SQUEEZE
VARIABLE SHRINK
16
9
4
3
(a)
(b)
(c)
(d)
(e)
(f)
(g)
(h)
(i)
(j)

FIG. 10

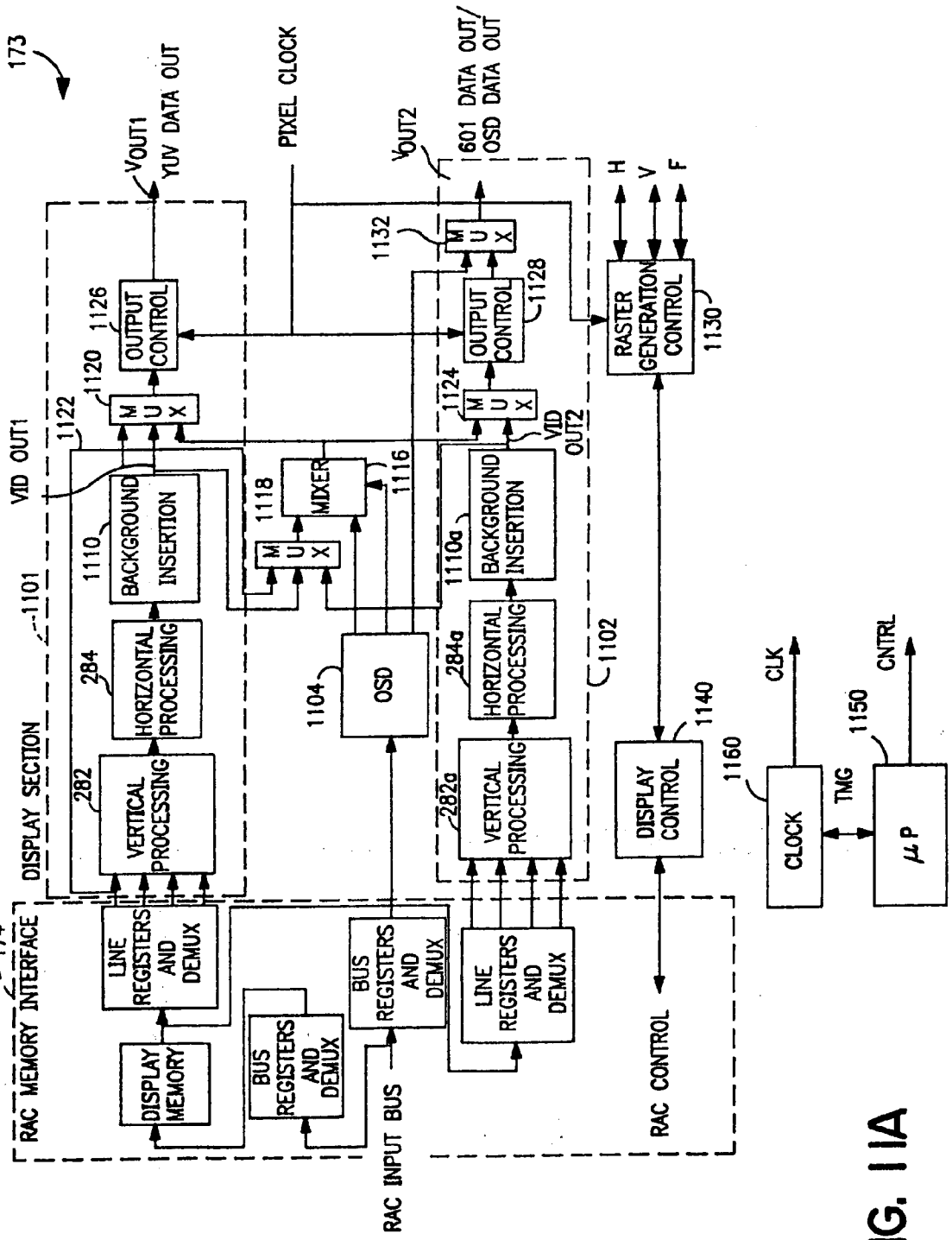
173
VOUT1
YUV DATA OUT
PIXEL CLOCK
VOUT2
601 DATA OUT/
OSD DATA OUT
H
V
F
1132
MUX
1126
OUTPUT CONTROL
1128
OUTPUT CONTROL
RASTER GENERATION CONTROL
1130
1120
MUX
1124
MUX
VID OUT1
1122
VID OUT2
1118
MIXER
1116
MUX
1110
BACKGROUND INSERTION
1110a
BACKGROUND INSERTION
1101
284
HORIZONTAL PROCESSING
284a
HORIZONTAL PROCESSING
1104
OSD
1102
DISPLAY SECTION
282
VERTICAL PROCESSING
282a
VERTICAL PROCESSING
1140
DISPLAY CONTROL
1160
CLOCK
CLK
TMG
1150
μP
CNTRL
174
RAC MEMORY INTERFACE
LINE REGISTERS AND DEMUX
DISPLAY MEMORY
BUS REGISTERS AND DEMUX
BUS REGISTERS AND DEMUX
LINE REGISTERS AND DEMUX
RAC INPUT BUS
RAC CONTROL

FIG. 11A

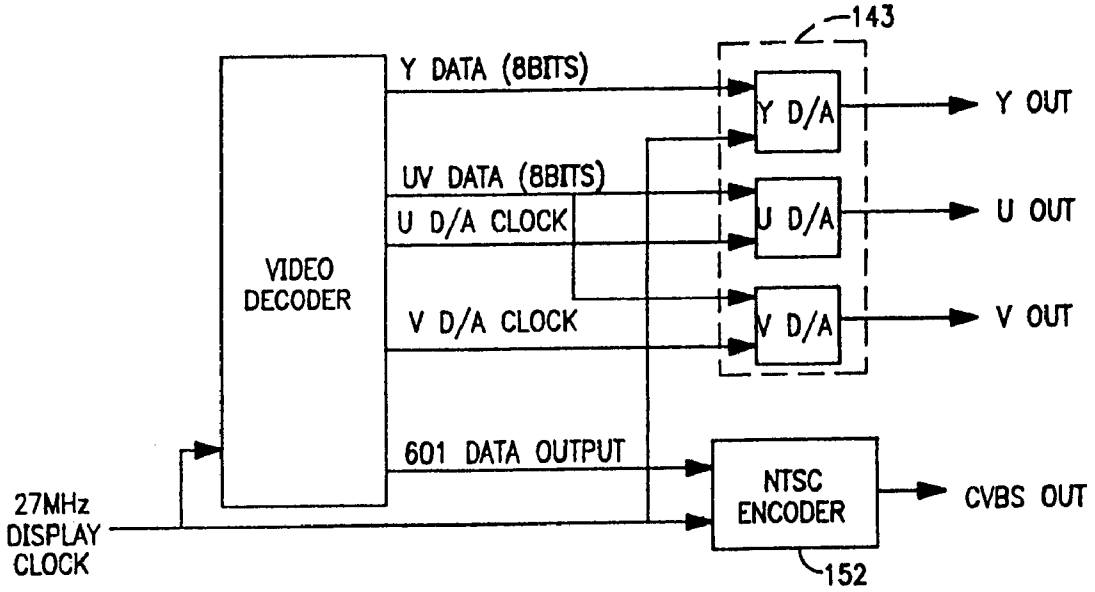

FIG. 11B

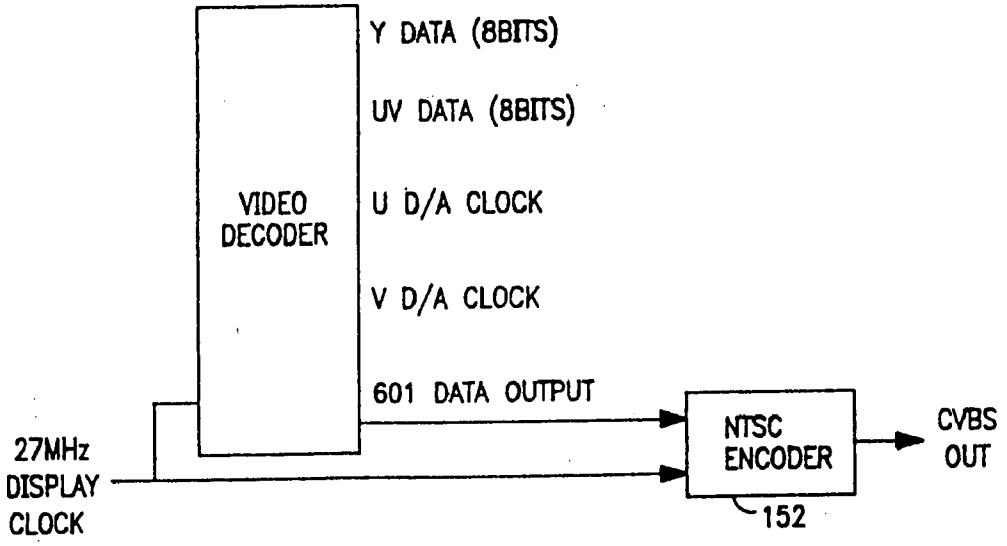

FIG. 11C

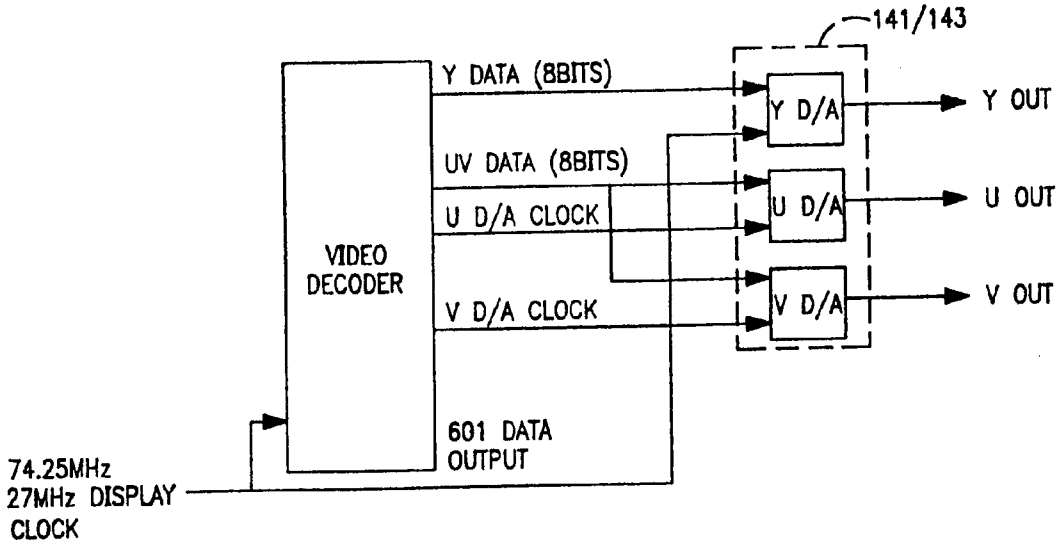
141/143
Y DATA (8BITS)
UV DATA (8BITS)
U D/A CLOCK
V D/A CLOCK
VIDEO DECODER
601 DATA OUTPUT
74.25MHz 27MHz DISPLAY CLOCK
Y D/A
U D/A
V D/A
Y OUT
U OUT
V OUT

FIG. 11D

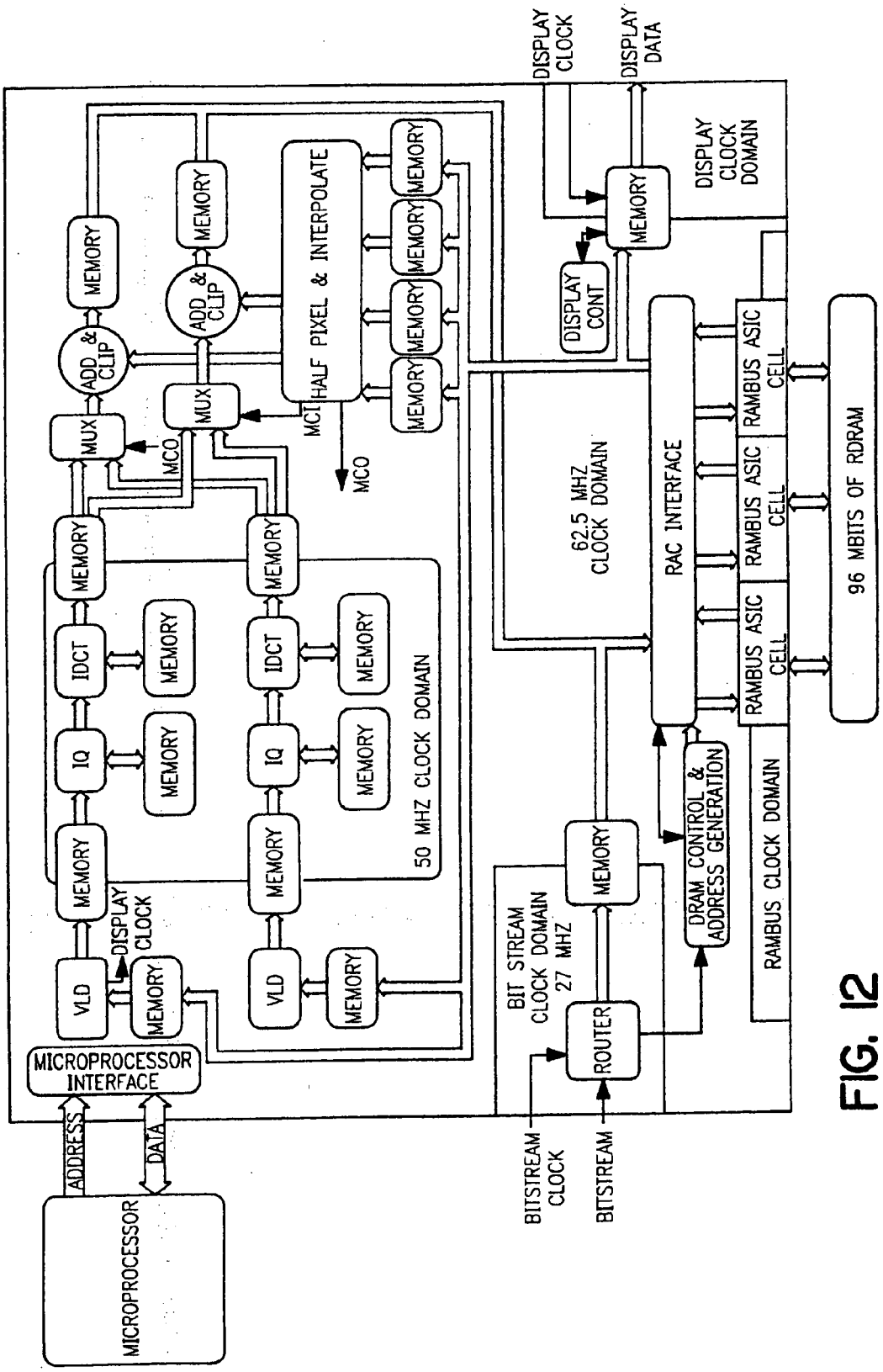

FIG. 12
PRIOR ART

HDTV DOWNCONVERSION SYSTEM

[0001] This patent application is a divisional of U.S. patent application Ser. No. 09/180,243, filed Apr. 5, 1999 which claims the benefit PCT Application number US98/04749, filed Mar. 11, 1998 which claim the benefit of of U.S. Provisional Application No. 60/040,517 filed Mar. 12, 1997.

FIELD OF THE INVENTION

[0002] This invention relates to a decoder for receiving, decoding and conversion of frequency domain encoded signals, e.g. MPEG-2 encoded video signals, into standard output video signals, and more specifically to a decoder which converts and formats an encoded high resolution video signal to a decoded lower resolution output video signal.

BACKGROUND OF THE INVENTION

[0003] In the United States a standard, the Advanced Television System Committee (ATSC) standard defines digital encoding of high definition television (HDTV) signals. A portion of this standard is essentially the same as the MPEG-2 standard, proposed by the Moving Picture Experts Group (MPEG) of the International Organization for Standardization (ISO). The standard is described in an International Standard (IS) publication entitled, "Information Technology—Generic Coding of Moving Pictures and Associated Audio, Recommendation H.626", ISO/IEC 13818-2, IS, 11/94 which is available from the ISO and which is hereby incorporated by reference for its teaching on the MPEG-2 digital video coding standard.

[0004] The MPEG-2 standard is actually several different standards. In MPEG-2 several different profiles are defined, each corresponding to a different level of complexity of the encoded image. For each profile, different levels are defined, each level corresponding to a different image resolution. One of the MPEG-2 standards, known as Main Profile, Main Level is intended for coding video signals conforming to existing television standards (i.e., NTSC and PAL). Another standard, known as Main Profile, High Level is intended for coding high-definition television images. Images encoded according to the Main Profile, High Level standard may have as many as 1,152 active lines per image frame and 1,920 pixels per line.

[0005] The Main Profile, Main Level standard, on the other hand, defines a maximum picture size of 720 pixels per line and 567 lines per frame. At a frame rate of 30 frames per second, signals encoded according to this standard have a data rate of 720 *567*30 or 12,247,200 pixels per second. By contrast, images encoded according to the Main Profile, High Level standard have a maximum data rate of 1,152*1,920*30 or 66,355,200 pixels per second. This data rate is more than five times the data rate of image data encoded according to the Main Profile Main Level standard. The standard for HDTV encoding in the United States is a subset of this standard, having as many as 1,080 lines per frame, 1,920 pixels per line and a maximum frame rate, for this frame size, of 30 frames per second. The maximum data rate for this standard is still far greater than the maximum data rate for the Main Profile, Main Level standard.

[0006] The MPEG-2 standard defines a complex syntax which contains a mixture of data and control information. Some of this control information is used to enable signals having several different formats to be covered by the standard. These formats define images having differing numbers of picture elements (pixels) per line, differing numbers of lines per frame or field and differing numbers of frames or fields per second. In addition, the basic syntax of the MPEG-2 Main Profile defines the compressed MPEG-2 bit stream representing a sequence of images in five layers, the sequence layer, the group of pictures layer, the picture layer, the slice layer, and the macroblock layer. Each of these layers is introduced with control information. Finally, other control information, also known as side information, (e.g. frame type, macroblock pattern, image motion vectors, coefficient zig-zag patterns and dequantization information) are interspersed throughout the coded bit stream.

[0007] Format conversion of encoded high resolution Main Profile, High Level pictures to lower resolution Main Profile, High Level pictures; Main Profile, Main Level pictures, or other lower resolution picture formats, has gained increased importance for a) providing a single decoder for use with multiple existing video formats, b) providing an interface between Main Profile, high level signals and personal computer monitors or existing consumer television receivers, and c) reducing implementation costs of HDTV. For example, conversion allows replacement of expensive high definition monitors used with Main Profile, High Level encoded pictures with inexpensive existing monitors which have a lower picture resolution to support, for example, Main Profile, Main Level encoded pictures, such as NTSC or 525 progressive monitors. One aspect, down conversion, converts a high definition input picture into lower resolution picture for display on the lower resolution monitor.

[0008] To effectively receive the digital images, a decoder should process the video signal information rapidly. To be optimally effective, the decoding systems should be relatively inexpensive and yet have sufficient power to decode these digital signals in real time. Consequently, a decoder which supports conversion into multiple low resolution formats must minimize processor memory.

SUMMARY OF THE INVENTION

[0009] The present invention is embodied in a digital video signal processing system which receives, decodes and displays video signals that have been encoded in a plurality of different formats. The system includes a digital video decoder which may be controlled to decode the encoded video signal and, optionally, provide a reduced resolution version of the decoded video signal. The system processes the received encoded video signal to determine the format and resolution of the image which would be produced if the signal were decoded. The system includes a controller which receives the determined format and resolution information and which also receives information concerning the format and resolution of a display device on which the received image will be displayed. The controller then generates signals to cause the digital video decoder to provide an analog video signal having a resolution and aspect ratio that is appropriate for the display device.

[0010] According to one aspect of the invention, the encoded video signals are encoded using a frequency-domain transform operation and the digital video decoder

includes a low-pass filter which operates on the frequency-domain transformed digital video signal.

[0011] According to another aspect of the invention, digital video decoder is coupled to a programmable spatial filter which is responsive to a control signal provided by the controller to resample the decoded digital video signal provided by the digital video decoder to produce a digital video signal which conforms to the aspect ratio and resolution of the display device.

[0012] According to another aspect of the invention, the digital video signal is encoded according to using an encoding technique specified by the moving pictures experts group (MPEG) and the aspect ratio and resolution of the encoded video signal are extracted from the header of a packetized elementary stream (PES) packet received by the digital video decoder.

[0013] According to another aspect of the invention, the digital video signal is encoded according to using an encoding technique specified by the moving pictures experts group (MPEG) and the aspect ratio and resolution of the encoded video signal are extracted from a sequence header of a video bit-stream received by the digital video decoder.

[0014] According to another aspect of the invention, the system includes a user input device through which a user may configure the system to produce an output video signal which is compatible with the display device.

[0015] According to another aspect of the invention, the system includes apparatus which automatically determines the aspect ratio and resolution of the display device.

[0016] According to another aspect of the invention, the system includes apparatus which sequentially produces video signals corresponding to a plurality of display device types and is responsive to a selection signal provided by a user to identify one of the display types as corresponding in resolution and aspect ratio to the display device.

BRIEF DESCRIPTION OF THE DRAWINGS

[0017] These and other features and advantages of the present invention will become apparent from the following detailed description, taken in conjunction with the accompanying drawings, wherein:

[0018] **FIG. 1A** is a high level block diagram of a video decoding and format conversion system according to an exemplary embodiment of the present invention.

[0019] **FIG. 1B** is a high level block diagram showing the functional blocks of the ATV Video Decoder including an interface to external Memory as employed in an exemplary embodiment of the present invention.

[0020] **FIG. 2A** is a high level block diagram of a video decoder of the prior art.

[0021] **FIG. 2B** is a high level block diagram of the down conversion system as employed by an exemplary embodiment of the present invention.

[0022] **FIG. 2C** is a block diagram which illustrates a configuration of the decoder shown in **FIG. 2B** which is used to decode a video signal in 1125I format including a downconversion by factor of 3 to 525P/525I format.

[0023] **FIG. 2D** is a block diagram which illustrates a configuration of the decoder shown in **FIG. 2B** which is used to decode a video signal in 750P format including a downconversion by factor of 2 to 525P/525I format.

[0024] **FIG. 3A** is a pixel chart which illustrates subpixel positions and corresponding predicted pixels for the 3:1 and 2:1 exemplary embodiments of the present invention.

[0025] **FIG. 3B** is a flow-chart diagram which shows the upsampling process which is performed for each row of an input macroblock for an exemplary embodiment of the present invention.

[0026] **FIG. 4** is a pixel chart which illustrates the multiplication pairs for the first and second output pixel values of an exemplary embodiment of a block mirror filter.

[0027] **FIG. 5** is a block diagram which illustrates an exemplary implementation of the filter for down-conversion for a two-dimensional system processing the horizontal and vertical components implemented as cascaded one-dimensional IDCTs.

[0028] **FIG. 6A** is a macroblock diagram which shows the input and decimated output pixels for 4:2:0 video signal using 3:1 decimation.

[0029] **FIG. 6B** is a pixel block diagram which shows the input and decimated output pixels for 4:2:0 video signal using 2:1 decimation.

[0030] **FIG. 6C** is a macroblock diagram which illustrates a merging process of two macroblocks into a single macroblock for storage in memory for downconversion by 2 horizontally.

[0031] **FIG. 6D** is a macroblock diagram which illustrates a merging process of three macroblocks into a single macroblock for storage in memory for downconversion by 3 horizontally.

[0032] **FIG. 7A** is a block diagram illustrating a vertical programmable filter of one embodiment of the present invention.

[0033] **FIG. 7B** is a pixel diagram which illustrates the spatial relationships between vertical filter coefficients and a pixel sample space of lines of the vertical programmable filter of **FIG. 7A**.

[0034] **FIG. 8A** is a block diagram illustrating a horizontal programmable filter of one embodiment of the present invention.

[0035] **FIG. 8B** is a pixel diagram which illustrates spatial relationships between horizontal filter coefficients and pixel sample values of one embodiment of the present invention.

[0036] **FIG. 9A** is a graph of pixel number versus resampling ratio which illustrates a resampling ratio profile of an exemplary embodiment of the present invention.

[0037] **FIG. 9B** is a graph which shows a first ratio profile for mapping a 4:3 picture onto a 16:9 display.

[0038] **FIG. 9C** is a graph which shows a second ratio profile for mapping a 4:3 picture onto a 16:9 display.

[0039] **FIG. 9D** is a graph which shows a first ratio profile for mapping a 16:9 picture onto a 4:3 display.

[0040] **FIG. 9E** is a graph which shows a second ratio profile for mapping a 16:9 picture onto a 4:3 display.

[0041] **FIG. 10** is a chart of image diagrams which illustrates the effect of using resampling ratio profiles according to an exemplary embodiment of the present invention.

[0042] **FIG. 11A** is a high level block diagram illustrating the display section of the ATV Video Decoder of an exemplary embodiment of the present invention.

[0043] **FIG. 11B** is a block diagram which illustrates a 27 MHz Dual output mode of an exemplary embodiment of the present invention which, for which the video data is 525P or 525I, a first processing chain provides video data to a 27 MHz DAC well as to an NTSC Encoder.

[0044] **FIG. 11C** is a block diagram which illustrates that, in the 27 MHz single output mode of an exemplary embodiment of the present invention, only a 525I video signal is provided to a NTSC encoder.

[0045] **FIG. 11D** is a block diagram which illustrates a 74 MHz /27 MHz mode of an exemplary embodiment of the present invention in which the output format matches the input format and the video data is provided to either a 27 MHz DAC or 74 MHz DAC depending on the input format.

[0046] **FIG. 12** is a high level block diagram of the video decoder having high bandwidth memory as employed by an exemplary embodiment of the present invention to decode ATSC video signals.

DETAILED DESCRIPTION

[0047] System Overview

[0048] The exemplary embodiments of the invention decode conventional HDTV signals which have been encoded according to the MPEG-2 standard and in particular, the Main Profile High Level (MP@HL) and the Main Profile Main Level (MP@ML) MPEG-2 standards, and provides the decoded signals as video signals having a lower resolution than that of the received HDTV signals and having a selected one of multiple formats.

[0049] The MPEG-2 Main Profile standard defines a sequence of images in five levels: the sequence level, the group of pictures level, the picture level, the slice level, and the macroblock level. Each of these levels may be considered to be a record in a data stream, with the later-listed levels occurring as nested sub-levels in the earlier listed levels. The records for each level include a header section which contains data that is used in decoding its sub-records.

[0050] Each macroblock of the encoded HDTV signal contains six blocks and each block contains data representing 64 respective coefficient values of a discrete cosine transform (DCT) representation of 64 picture elements (pixels) in the HDTV image.

[0051] In the encoding process, the pixel data may be subject to motion compensated differential coding prior to the discrete cosine transformation and the blocks of transformed coefficients are further encoded by applying run-length and variable length encoding techniques. A decoder which recovers the image sequence from the data stream reverses the encoding process. This decoder employs an entropy decoder (e.g. a variable length decoder), an inverse discrete cosine transform processor, a motion compensation processor, and an interpolation filter.

[0052] The video decoder of the present invention is designed to support a number of different picture formats, while requiring a minimum of decoding memory for down-conversion of high resolution encoded picture formats, for example, 48 Mb of Concurrent Rambus dynamic random access memory (Concurrent RDRAM).

[0053] **FIG. 1A** shows a system employing an exemplary embodiment of the present invention for receiving and decoding encoded video information at MP@HL or at MP@ML, formatting the decoded information to a user selected output video format (which includes both video and audio information), and interfaces for providing the formatted video output signals to display devices. The exemplary embodiments of the present invention are designed to support all ATSC video formats; and in a Down Conversion (DC) mode the present invention receives any MPEG Main Profile video bitstream (constrained by FCC standards) and provides a 525P, 525I or NTSC format picture.

[0054] The exemplary system of **FIG. 1A** includes a front end interface **100**, a video decoder section **120** and associated Decoder Memory **130**, a primary video output interface **140**, an audio decoder section **160**, an optional computer interface **110**, and an optional NTSC video processing section **150**.

[0055] Referring to F**FIG.** 1A, the exemplary system includes a front end interface **100**, having a transport decoder and processor **102** with associated memory **103**. Also included may be an optional multiplexer **101** for selecting received control information and computer generated images from the computer interface **110** at, for example, the IEEE 1394 link layer protocol or for recovering an encoded transport stream from a digital television tuner (not shown). The transport decoder **102** converts the received compressed data bit stream from the communication channel bit stream into compressed video data, which may be, for example, packetized elementary streams (PES) packets according to MPEG-2 standard. The transport decoder may provide either the PES packets directly, or may further convert the PES packets into one or more elementary streams.

[0056] The video decoder section includes an ATV Video Decoder **121** and phase-locked loop (PLL) **122**. The ATV video Decoder **121** receives an elementary stream or video (PES) packets from the front end interface **100**, from the front end interface and converts the packets to the elementary stream. A front end picture processor of the ATV Video Decoder **121** then decodes the elementary streams according to the encoding method used, to provide luminance and chrominance pixel information for each image picture. The PLL **122** synchronizes the audio and video processing performed by the system shown in **FIG. 1A**.

[0057] The ATV Video Decoder **121** further includes a memory subsystem to control decoding operations using an external memory which provides image picture information and a display section to process decoded picture information into a desired picture format. The ATV Video Decoder **121** employs the Decoder Memory **130** to process the encoded video signal. The Decoder Memory **130** includes memory units **131**, **132**, **133**, **134**, **135** and **136**, which may each be

a 16 Mb RDRAM memory. Exemplary embodiments the present invention are subsequently described with respect to, and implemented within, the video decoder section **120** and Decoder Memory **130**.

[**0058**] The primary video output interface **140** includes a first Digital to Analog (D/A) converter (DAC) **141** (which actually has three D/A units for the luminance signal and the C_R and C_B chrominance signals) which may operate at 74 MHz, followed by a filter **142**. This interface produces analog video signals having a 1125I or 750P format. The interface **140** and also includes a second (D/A) converter (DAC) **143** (also with three D/A units for luminance signal and C_R and C_B chrominance signals) which may operate at 27 MHz, followed by a filter **142** for video signals having a 525I or 525P format. The primary video output interface **140** converts the digitally encoded video signals having a desired format, creates an analog video signal having chrominance and luminance components with the desired format using a (D/A) converter, and filters the analog video signal to remove sampling artifacts of the D/A conversion process.

[**0059**] The audio decoder section **160** includes an AC3 Audio decoder **162** which provides audio signals at output ports **163** and **164**, and optional 6-2 channel down mixing processor **161** to provide 2 channel audio signals at output port **165**. The audio processing of MP@HL MPEG-2 standard audio signal components from encoded digital information to analog output at output ports **163**, **164** and **165** is well known in the art, and an audio decoder suitable for use as the decoder **160** is a ZR38500 Six Channel Dolby Digital Surround Processor, available from the Zoran Corporation of Santa Clara, Calif.

[**0060**] The optional computer interface **110** transmits and receives computer image signals which conform, for example, to the IEEE 1394 standard. The computer interface **110** includes a physical layer processor **111** and link layer processor **112**. The physical layer processor **111** converts electrical signals from output port **113** into received computer generated image information and control signals, and provides these signals, for decoding by the link layer processor **112** into IEEE 1394 formatted data. The physical layer processor **111** also converts received control signals encoded by the link layer processor **112** originating from the transport decoder **102** into electrical output signals according to the IEEE 1394 standard.

[**0061**] The NTSC video processing section **150** includes an optional ATV-NTSC Downconversion processor **151** which converts the analog HDTV signal provided by the filter **142** into a 525 I signal. This conversion between standards is known in the art and may be accomplished using spatial filtering techniques such as those disclosed in, for example, U.S. Pat. No. 5,613,084 to Hau et al. entitled INTERPOLATION FILTER SELECTION CIRCUIT FOR SAMPLE RATE CONVERSION USING PHASE QUANTIZATION, which is incorporated herein by reference. In the exemplary embodiment of the invention, this processing section is used only when the decoder processes a 1080I or 1125I signal.

[**0062**] The NTSC encoder **152** receives a 525I analog signal either from the processor **151** or directly from the decoder **120**, and converts the signal to the NTSC formatted video signal at output ports **153** (S-video) and **154** (composite video).

[**0063**] Video Decoder Section Employing Decoder Memory

[**0064**] **FIG. 1B** is a high level block diagram showing the functional blocks of the ATV Video Decoder **121** including an interface to external Memory **130** as employed in an exemplary embodiment of the present invention. The ATV Video Decoder **121** includes a Picture Processor **171**, a Macroblock Decoder **172**, a Display section **173**, and a Memory subsystem **174**. The Picture processor **171** receives, stores and partially decodes the incoming MPEG-2 video bitstream and provides the encoded bitstream, on-screen display data, and motion vectors, which may be stored in memory **130** under the control of the Memory subsystem **174**. The Macroblock Decoder **172** receives the encoded bitstream, motion vectors, and stored motion compensation reference image data, if predictive encoding is used, and provides decoded macroblocks of the encoded video image to the memory subsystem **174**. The Display Section **173** retrieves the decoded macroblocks from the Memory subsystem **174** and formats these into the video image picture for display. The operation of these sections is described in detail below.

[**0065**] Main Profile Format Support for Picture Processing

[**0066**] The ATV video decoder **121** of the present invention is designed to support all ATSC video formats. For simplicity, the operation of the ATV video decoder **121** is termed Down Conversion (DC), and ATV video decoder **121** receives any MPEG Main Profile video bitstreams shown in Table 1 and provides a 525P, 525I or NTSC format video signal. For the exemplary video decoder of **FIG. 1**A, in DC mode, any HDTV or SDTV signal is decoded and a display output signal provided at either of two ports, with port one providing either a progressive or interlaced image, and port two providing an interlaced image.

TABLE 1

Video Bitstream Formats

Number and Format	Horizontal	Vertical	Aspect Ratio	Frame rate (Hz)
(1) 1125I	1920	1080	16 × 9	30, 29.97
(2) 1125P	1920	1080	16 × 9	30, 29.97, 24, 23.98
(3) 750P	1280	720	16 × 9	60, 59.94, 30, 29.97, 24, 23.98
(4) 525P	704	480	16 × 9	60, 59.94, 30, 29.97, 24, 23.98
(5) 525P	704	480	4 × 3	60, 59.94, 30, 29.97, 24, 23.98
(6) 525P	640	480	4 × 3	60, 59.94, 30, 29.97, 24, 23.98
(7) 525I	704	480	16 × 9	30, 29.97
(8) 525I	704	480	4 × 3	30, 29.97
(9) 525I	640	480	4 × 3	30, 29.97

[**0067**] In DC mode, low pass filtering of the high frequency components of the Main Level picture occurs as part of the decoding process to adjust the resolution of the high resolution picture to a format having a lower resolution. This operation includes both horizontal and vertical filtering of the high resolution picture. Note that in DC Mode, the display format conversion may display 16×9 aspect ratio sources on 4×3 displays, and vice-versa. This process is described subsequently with reference to the display section

of the video decoder section **120**. Table 2 gives the supported primary and secondary output picture formats for the respective input bitstreams of Table 1:

TABLE 2

DC Supported Video Formats

Number and Format	Primary Output Format	Secondary Output Format	Display Clock (MHz)
(1) 1125I	525P	525I	27.00
(2) 1125P	525P	525I	27.00
(3) 750P	525P	525I	27.00
(4) 525P	525P	525I	27.00
(5) 525P	525P	525I	27.00
(6) 525P	525P	525I	27.00
(7) 525I	525P	525I	27.00
(8) 525I	525P	525I	27.00
(9) 525I	525P	525I	27.00

[**0068**] b) Decoding, Downconversion and Downsampling

[**0069**] 1) Overview

[**0070**] **FIG. 2A** is a high level block diagram of a typical video decoding system of the prior art which processes an MPEG-2 encoded picture. The general methods used to decode an MPEG-2 encoded picture, without subsequent processing, downconversion or format conversion, are specified by the MPEG-2 standard. The video decoding system includes an entropy decoder (ED) **211**, which may include a parser **209**, a variable length decoder (VLD) **210** and run length decoder **212**. The system also includes an inverse quantizer **214**, and inverse discrete cosine transform (IDCT) processor **218**. A Controller **207** controls the various components of the decoding system responsive to the control information retrieved from the input bit stream by the ED **211**. For processing of prediction images, the system further includes a memory **199** having reference frame memory **222**, summing network **230**, and Motion Compensation Processor **206***a* which may have a motion vector processor **221** and half-pixel generator **228**.

[**0071**] The controller **207** is coupled to an infrared receiver **208** which receives command signals provided by, for example, a user remote control device. The controller **207** decodes these commands and causes the remainder of the system shown in **FIG. 2A** to perform the specified command. In the exemplary embodiment of the invention, the system shown in **FIG. 2A** includes a set-up mode in which the user may specify a configuration for the system. In one exemplary embodiment of the invention, this configuration may include the specification of a display device type. It is contemplated that the display device type may be specified in terms of display resolution and aspect ratio. The user may specify the display type by selecting a particular display aspect ratio and resolution from a menu of possible choices or by causing the system to enter a mode in which signals corresponding to different display formats are successively provided to the display device and the user is asked to indicate, via the remote control device, which display is most pleasing. During normal operation, the controller **207** also receives information on the resolution and aspect ratio of the encoded video signal from the parser **209** of the ED **211**. Using this information and the stored information relating to the resolution and aspect ratio of the display device, the controller **207** automatically configures the system to process the received encoded signal to produce an analog output signal appropriate for display on the display device.

[**0072**] The parser **209** scans the received bit stream for MPEG start codes. These codes include a prefix which has a format of 23 consecutive zero-valued bits followed by a single bit having a value of one. The start code value follows this prefix and identifies the type of record that is being received. In the exemplary embodiment of the invention, when the parser **209** stores the bit stream into the memory **199** and the bit stream is then supplied from the memory **199** to the VLD for further processing. In the block diagram shown in **FIG. 2**A, this has been shortened to show the parser providing the bit stream directly to the VLD.

[**0073**] When the parser **209** finds a start code in the bit stream, it passes the bit stream onto the memory **199** for storage in the VBV buffer and also stores a pointer to the start code in an area of the memory **199** which is accessed by the controller **207**. The controller **207** continually accesses the start code pointers and, through them, the record headers. When the controller **207** finds a sequence start code, it accesses information in the sequence header which indicates the aspect ratio and resolution of the image sequence that is represented by the encoded sequence. According to the MPEG standard, this information immediately follows the sequence start code in the sequence header.

[**0074**] Information on the display format of the encoded video signal (i.e. its resolution and aspect ratio) is also contained in the headers of the packetized elementary stream (PES) packets. It is contemplated that in another exemplary embodiment of the invention, the parser **209** may receive PES packets, strip the headers from them to reconstruct the bit stream and pass this header information, including the display format of the received video signal, to the controller **207**.

[**0075**] As described below, the controller **207** uses information on the display format of the received video signal and information on the display format of the display device (not shown) which is connected to the decoder system to automatically or semiautomatically adjust the processing of the received video signal for proper display on the display device.

[**0076**] The VLD **210** receives the encoded bit stream from the parser **209** via the VBV buffer (not shown) in the memory **199**, and reverses the encoding process to produce macroblocks of quantized frequency-domain (DCT) coefficient values. The VLD **210** also provides control information including motion vectors describing the relative displacement of a matching marcoblock in a previously decoded image which corresponds to a macroblock of the predicted picture that is currently being decoded. The Inverse Quantizer **214** receives the quantized DCT transform coefficients and reconstructs the quantized DCT coefficients for a particular macroblock. The quantization matrix to be used for a particular block is received from the ED **211**.

[**0077**] The IDCT processor **218** transforms the reconstructed DCT coefficients to pixel values in the spatial domain (for each block of 8×8 matrix values representing luminance or chrominance components of the macroblock, and for each block of 8×8 matrix values representing the

differential luminance or differential chrominance components of the predicted macroblock).

[0078] If the current macroblock is not predictively encoded, then the output matrix values provided by the IDCT Processor **218** are the pixel values of the corresponding macroblock of the current video image. If the macroblock is interframe encoded, the corresponding macroblock of the previous video picture frame is stored in memory **199** for use by the Motion Compensation processor **206**. The Motion Compensation Processor **206** receives a previously decoded macroblock from memory **199** responsive to the motion vector, and then adds the previous macroblock to the current IDCT macroblock (corresponding to a residual component of the present predictively encoded frame) in summing network **230** to produce the corresponding macroblock of pixels for the current video image, which is then stored into the reference frame memory **222**.

[0079] **FIG. 2B** is a high level block diagram of the down conversion system of one exemplary embodiment of the present invention employing such a DCT filtering operation, and which may be employed by an exemplary embodiment of the present invention in DC mode. As shown in **FIG. 2**B, the down conversion system includes a variable length decoder (VLD) **210**, a run-length (R/L) decoder **212**, an inverse quantizer **214**, and inverse discrete cosine transform (IDCT) processor **218**. In addition, the down conversion system includes a Down Conversion filter **216** for filtering encoded pictures and a Down Sampling processor **232**. While the following describes the exemplary embodiment for a MP@HL encoded input, the present invention may be practiced with any similarly encoded high-resolution image bit stream.

[0080] The down conversion system also includes a Motion Compensation Processor **206***b* including a Motion Vector (MV) Translator **220**, a Motion Block Generator **224** including an Up-Sampling Processor **226**, Half-Pixel Generator **228**, and a Reference Frame Memory **222**.

[0081] The system of the first exemplary embodiment of **FIG. 2B** also includes a Display Conversion Block **280** having a Vertical Programmable Filter (VPF) **282** and Horizontal Programmable Filter (HZPF) **284**. The Display Conversion Block **280** converts downsampled images into images for display on a particular display device having a lower resolution than the original image, and is described in detail subsequently in section d)(2) on Display Conversion.

[0082] The Down Conversion Filter **216** performs a lowpass filtering of the high resolution (e.g. Main Profile, High Level DCT) coefficients in the frequency domain. The Down Sampling Process **232** eliminates spatial pixels by decimation of the filtered Main Profile, High Level picture to produce a set of pixel values which can be displayed on a monitor having lower resolution than that required to display a MP@HL picture. The exemplary Reference Frame Memory **222** stores the spatial pixel values corresponding to at least one previously decoded reference frame having a resolution corresponding to the down-sampled picture. For interframe encoding, the MV Translator **220** scales the motion vectors for each block of the received picture consistent with the reduction in resolution, and the High Resolution Motion Block Generator **224** receives the low resolution motion blocks provided by the Reference Frame Memory **222**, upsamples these motion blocks and performs half-pixel interpolation as needed to provide motion blocks which have pixel positions that correspond to the decoded and filtered differential pixel blocks.

[0083] Note that in the down conversion system of **FIG. 1B** the downsampled images are stored rather than high definition images, resulting in a considerable reduction of memory required for storing reference images.

[0084] The operation of an exemplary embodiment of the down-conversion system of the present invention for intraframe encoding is now described. The MP@HL bit-stream is received and decoded by VLD **210**. In addition to header information used by the HDTV system, the VLD **210** provides DCT coefficients for each block and macroblock, and motion vector information. The DCT coefficients are run length decoded in the R/L decoder **212** and inverse quantized by the inverse quantizer **214**.

[0085] Since the received video image represented by the DCT coefficients is a high resolution picture, the exemplary embodiment of the present invention employs lowpass filtering of the DCT coefficients of each block before decimation of the high resolution video image. The inverse quantizer **214** provides the DCT coefficients to the DCT filter **216** which performs a lowpass filtering in the frequency domain by weighting the DCT coefficients with predetermined filter coefficient values before providing them to the IDCT processor **218**. For one exemplary embodiment of the present invention, this filter operation is performed on a block by block basis.

[0086] The IDCT processor **218** provides spatial pixel sample values by performing an inverse discrete cosine transform of the filtered DCT coefficients. The Down Sampling processor **232** reduces the picture sample size by eliminating spatial pixel sample values according to a predetermined decimation ratio; therefore, storing the lower resolution picture uses a smaller frame memory compared to that which would be needed to store the higher resolution MP@HL picture.

[0087] The operation of an exemplary embodiment of the down-conversion system of the present invention for predicted frames of the encoding standard is now described. In this example, the current received image DCT coefficients represent the DCT coefficients of the residual components of the predicted image macroblocks, which is now referred to as a predicted frame (P-frame) for convenience. In the described exemplary embodiment, the horizontal components of the motion vectors for a predicted frame are scaled since the low resolution reference pictures of previous frames stored in memory do not have the same number of pixels as the high resolution predicted frame (MP@HL).

[0088] Referring to **FIG. 2**B, the motion vectors of the MP@HL bit stream provided by the VLD **210** are provided to the MV Translator **220** Each motion vector is scaled by the MV Translator **220** to reference the appropriate prediction block of the reference frame of a previous image stored in reference frame memory **222** of memory **199**. The size (number of pixel values) in the retrieved block is smaller than block provided by the IDCT processor **218**; consequently, the retrieved block is upsampled to form a prediction block having the same number of pixels as the residual block provided by the IDCT Processor **218** before the blocks are combined by the summing network **230**.

[0089] The prediction block is upsampled by the Up-Sampling Processor **226** responsive to a control signal from the MV Translator **220** to generate a block corresponding to the original high resolution block of pixels, and then half pixel values are generated—if indicated by the motion vector for the up-sampled prediction block in the Half Pixel Generator **228**—to ensure proper spatial alignment of the prediction block. The upsampled and aligned prediction block is added in summing network **230** to the current filtered block, which is, for this example, the reduced resolution residual component from the prediction block. All processing is done on a macroblock by macroblock basis. After the motion compensation process is complete for the current high-resolution macroblock, the reconstructed macroblock is decimated accordingly by the Down Sampling Processor **232**. This process does not reduce the resolution of the image but simply removes redundant pixels from the low resolution filtered image.

[0090] Once the downsampled macroblocks for an image are available, the Display Conversion Block **280** adjusts the image for display on a low resolution television display unit by filtering the vertical and horizontal components of the downsampled image in VPF **282** and HZPF **284** respectively.

[0091] The relationship between the functional blocks of the ATV Video Decoder **121** of **FIG. 1**A and **FIG. 1B** is now described. The picture processor **171** of **FIG. 1B** receives the video picture information bitstreams. The Macroblock Decoder **172** includes VLD **210**, inverse quantizer **214**, the DCT filter **216**, IDCT **218**, summing network **230**, and the motion compensated predictors **206***a* and **206***b*. The picture processor **171** may share the VLD **210**. External Memory **130** corresponds to memory **199**, with 16 Mb RDRAM 131-136 containing the reference frame memory **222**.

[0092] **FIG. 2C** illustrates the operation of the system in DC mode, converting an 1125I signal to 525P/525I format. In this scenario, after low pass filtering by DCT filter **216** as described above with reference to **FIG. 2**B, the system down samples the high resolution signal by a factor of 3, and stores the pictures in the 48 Mb memory as 640H and 1080 V, interlaced. For this system, the motion compensation process upsamples the stored pictures by a factor of 3 (as well as translation of the received motion vectors) before motion-predictive decoding is accomplished. Also, the picture is filtered horizontally and vertically for display conversion.

[0093] **FIG. 2D** similarly illustrates the relationship between DC mode format downconversion from 750P to 525P/525I format. This conversion operates in the same way as the 1125I to 525P/525I conversion except that downsampling for memory storage, and upsampling for motion compensation, is by a factor of 2.

[0094] 2) Macroblock Prediction for Downconversion

[0095] For the exemplary downconversion process, since the reference frames of the previous images are down sized in the horizontal direction, the received motion vectors pointing to these frames may also be translated according to the conversion ratio. The following describes the motion translation for the luminance block in the horizontal direction. One skilled in the art could easily extend the following discussion to motion translation in the vertical direction if desired. Denoting x and y as the current macroblock address in the original image frame, Dx as the horizontal decimation factor and mv_x as the half pixel horizontal motion vector of the original image frame, the address of the top left pixel of the motion block in the original image frame, denoted as XH in the half pixel unit, is given by (1):

$$XH=2x+mv_x \tag{1}$$

[0096] The pixel corresponding to the motion block starts in the down-sampled image, and has an address denoted as x* and y* may be determined using equation (2).

$$x^* = \frac{XH}{2 \cdot Dx};\ y^* = y \tag{2}$$

[0097] The division of equation (2) is an integer division with truncation.

[0098] Because the exemplary filter **216** and Down Sampling Processor **232** only reduce the horizontal components of the image, the vertical component of the motion vector is not affected. For the chrominance data, the motion vector is one-half of a luminance motion vector in the original picture. Therefore, definitions for translating the chrominance motion vector may also use the two equations (1) and (2).

[0099] Motion prediction is done by a two step process: first, pixel accuracy motion estimation in the original image frame may be accomplished by upsampling of down-sampled image frame in the Up Sampling Processor **226** of **FIGS. 2A and 2B**, then the half pixel Generator **228** performs a half pixel interpolation by averaging of nearest pixel values.

[0100] The reference image data is added to output data provided by the IDCT processor **218**. Since the output values of the summing network **230** correspond to an image having a number of pixels consistent with a high resolution format, these values may be downsampled for display on a display having a lower resolution. Downsampling in the Down Sampling processor **232** is substantially equivalent to subsampling of an image frame, but adjustments may be made based upon the conversion ratio. For example, in the case of 3:1 downsampling, the number of horizontally downsampled pixels are 6 or 5 for each input macroblock, and the first downsampled pixels are not always first pixel in the input macroblock.

[0101] After acquiring the correct motion prediction block from the down-sampled image, upsampling is used to get the corresponding prediction block in the high resolution picture. Consequently, subpixel accuracy in motion block prediction is desirable in the down sampled picture. For example, using 3:1 decimation, it is desirable to have ⅓ (or ⅙) subpixel accuracy in the down-converted picture for proper motion prediction. The subpixel which is a first pixel required by the motion vector, in addition to the down-sampled motion block, is determined. Then, subsequent subpixel positions are determined using modulo arithmetic as described in the following. The subpixel positions are denoted as x_s as given in equation (3):

$$X_s = \left(\frac{XH}{2}\right)\%(Dx) \tag{3}$$

[0102] where "%" represents modulo division.

[0103] For example, the ranges of x_s are 0, 1, 2 for 3:1 upsampling and 0, 1 for 2:1 upsampling. **FIG. 3A** shows subpixel positions and corresponding 17 predicted pixels for the 3:1 and 2:1 examples, and Table 3 gives the legend for **FIG. 3A**.

TABLE 3

Symbol	Pixel
|	Downsampled Pixel
Δ	Upsampled Pixel
○	Prediction Pixel
□□	Extra Right and Left Pixels for Upsampling

[0104] As previously described, the upsampling filters may be upsampling polyphase filters, and Table 4 gives characteristics of these upsampling polyphase interpolation filters.

TABLE 4

	3:1 Upsampling	2:1 Upsampling
Number of Polyphase Filters	3	2
Number of Taps	3	5
Maximum number of horizontal downsampled pixels	9	13

[0105] Next two tables, Table 5 and Table 6, show polyphase filter coefficients for the exemplary 3:1 and 2:1 upsampling polyphase filters.

TABLE 5

	3:1 Upsampling Filter		
	Phase 0	Phase 1	Phase 2
Double Precision	−0.1638231735591	0.0221080691070	0.3737642376078
	0.7900589359512	0.9557838617858	0.7900589359512
	0.3737642376078	0.0221080691070	−0.1638231735591
Fixed Point (9 bits)	−0.1640625 (−42)	0.0234375 (6)	0.3750000 (96)
	0.7890625 (202)	0.95703125 (244)	0.7890625 (202)
	0.3750000 (96)	0.0234375 (6)	−0.1640625 (−42)

[0106]

TABLE 6

	2:1 Upsampling Filter	
	Phase 0	Phase 1
Double Precision	0.0110396839260	−0.1433363887113
	0.0283886402920	0.6433363887113

TABLE 6-continued

	2:1 Upsampling Filter	
	Phase 0	Phase 1
	0.9211433515636	0.6433363887113
	0.0283886402920	−0.1433363887113
	0.0110396839260	0.0000000000000
Fixed Point (9 bits)	0.01718750 (3)	−0.14453125 (−37)
	0.02734375 (7)	0.64453125 (165)
	0.92187500 (236)	0.64453125 (165)
	0.02734375 (7)	−0.14453125 (−37)
	0.01718750 (3)	0.00000000 (0)

[0107] In a fixed point representation, the numbers in parenthesis of Table 5 and Table 6 are 2's complement representations in 9 bits with the corresponding double precision numbers are on the left. Depending upon the subpixel position of the motion prediction block in the downsampled reference image frame, one corresponding phase of the polyphase interpolation filter is used. Also, for the exemplary embodiment additional pixels on the left and right are used to interpolate 17 horizontal pixels in the original image frame. For example, in the case of 3:1 decimation, a maximum of 6 horizontally downsampled pixels are produced for each input macroblock. However, when upsampling, 9 horizontal pixels are used to produce the corresponding motion prediction block values because an upsampling filter requires more left and right pixels outside of the boundary for the filter to operate. Since the exemplary embodiment employs half pixel motion estimation, 17 pixels are needed to get 16 half pixels which are the average values of nearest two pixel samples. A half pixel interpolator performs the interpolation operation which provides the block of pixels with half-pixel resolution. Table 7A illustrates an exemplary mapping between subpixel positions and polyphase filter elements, and shows a number of left pixels which are needed in addition to the pixels in the upsampled block for the upsampling process.

TABLE 7A

	Sub Pixel Position	Polyphase	No. of Extra Left Pixels	Coordinate Change
3:1	0	1	1	x* − > x* − 1
Upsampling	1	2	1	x* − > x* − 1
	2	0	0	
2:1	0	0	2	x* − > x* − 2
Upsampling	1	1	2	x* − > x* − 2

[0108] **FIG. 3B** summarizes the upsampling process which is performed for each row of an input macroblock. First, in step **310**, the motion vector for the block of the input image frame being processed is received. At step **312**, the motion vector is translated to correspond to the downsampled reference frame in memory. At step **314**, the scaled motion vector is used to calculate the coordinates of the desired reference image half macroblock stored in memory **130**. At step **316** the subpixel point for the half macroblock is determined and the initial polyphase filter values for upsampling are then determined at step **318**. The identified pixels for the reference half macroblock of the stored downsampled reference frame are then retrieved from memory **130** at step **320**.

[0109] Before the first pass at the filtering step **324**, the registers of the filter may be initialized at step **322**, which, for the exemplary embodiment includes the step of loading the registers with the initial 3 or 5 pixel values. Then, after the filtering step **324**, the process determines, at step **326**, whether all pixels have been processed, which for the exemplary embodiment is 17 pixels. If all pixels have been processed, the upsampled block is complete. For an exemplary embodiment, a 17 by 9 pixel half macroblock is returned. The system returns upper or lower half macroblocks to allow for motion prediction decoding of both progressive scan and interlaced scan images. If all pixels have not been processed, the phase is updated at step **328**, and the phase is checked, for the 0 value. If the phase is zero, the registers are updated for the next set of pixel values. Updating the phase at step **328** updates the phase value to 0, 1, and 2 for the filter loop period for exemplary 3:1 upsampling and to 0, and 1 for the filter loop period for 2:1 upsampling. Where the left-most pixel is outside of a boundary of the image picture, the first pixel value in the image picture may be repeated.

[0110] For an exemplary embodiment, the upsample filtering operation may be implemented in accordance with the following guidelines. First, several factors may be used: 1) the half-pixel motion prediction operation averages two full pixels, and corresponding filter coefficients are also averaged to provide the half-pixel filter coefficient; 2) a fixed number of filter coefficients, five for example, which may be equivalent to the number of filter taps, may be employed regardless of the particular downconversion; 3) five parallel input ports may be provided to the upsampling block for each forward and backward lower and upper block, with five input pixels LWR(**0**)-LWR(**4**) for each clock transition for each reference block being combined with corresponding filter coefficients to provide one output pixel, and 4) the sum of filter coefficients h(**0**)-h(**4**) combined with respective pixels LWR(**0**)-LWR(**4**) provide the output pixel of the sampling block.

[0111] Filter coefficients are desirably reversed because the multiplication ordering is opposite to the normal ordering of filter coefficients, and it may be desirable to zero some coefficients. Table 7B gives exemplary coefficients for the 3:1 upsampling filter, and Table 7C gives exemplary coefficients for the 2:1 upsampling filter:

TABLE 7B

	Sub-pixel 0	Sub-pixel 1	Sub-pixel 2	Sub-pixel 3	Sub-pixel 4	Sub-pixel 5
Filter Coeff.	6	−18	−42	−21	96	51
	244	223	202	149	202	223
	6	51	96	149	−42	−18
	0	0	0	−21	0	0
	0	0	0	0	0	0
Reference	x* − 1	x* − 1	x* − 1	x* − 1	x*	x*
Phase	01	00	10	01	00	10
Half Pixel	0	1	0	1	0	1

[0112]

TABLE 7C

	Subpixel 0	Subpixel 1	Subpixel 2	Subpixel 3
Filter Coeff.	3	2	−37	−17
	7	−15	165	86
	236	200	165	200
	7	86	−37	−15
	3	−17	0	2
Reference	x* − 2	x* − 2	x* − 1	x* − 1
Phase	00	00	01	01
Half Pixel	0	1	0	1

[0113] In Tables 7B and 7C, x* is the downsampled pixel position defined in equations (1) and (2), and subpixel position, x_s, is redefined from equation (3) as equation (3')

$$x_s=(XH)\%(2Dx) \tag{3'}$$

[0114] For chrominance values of the exemplary implementation, XH is scaled by two and equations (1),(2) and (3') are applied. In one embodiment, phase and half pixel information (coded as two bits and one bit, respectively) is used by motion compensation processor **220** and half-pixel generator **228** of **FIG. 2B**. For example, reference block pixels are provided as U pixels first, V pixels next, and finally Y pixels. U and V pixels are clocked in for 40 cycles and Y pixels are clocked in for 144 cycles. Reference blocks may be provided for 3:1 decimation by providing the first five pixels, repeating twice, shifting the data by one, and repeating until a row is finished. The same method may be used for 2:1 decimation except that it is repeated once rather than twice. Input pixels are repeated since decimation follows addition of the output from motion compensation and half-pixel generation with the residual value. Consequently, for 3:1 decimation, two of three pixels are deleted, and dummy pixels for these pixel values do not matter.

[0115] 3) DCT Domain Filtering Employing Weighting of DCT Coefficients

[0116] The exemplary embodiment of the present invention includes the DCT filter **216** of **FIG. 2A** processing the DCT coefficients in the frequency domain, which replaces a lowpass filter in the spatial domain. There are several advantages in DCT domain filtering instead of spatial domain filtering for DCT coded pictures, such as contemplated by the MPEG or JPEG standards. Most notably, a DCT domain filter is computationally more efficient and requires less hardware than a spatial domain filter applied to the spatial pixel sample values. For example, a spatial filter having N taps may use as many as N additional multiplications and additions for each spatial pixel sample value. This compares to only one additional multiplication in the DCT domain filter.

[0117] The simplest DCT domain filter of the prior art is a truncation of the high frequency DCT coefficients. However, truncation of high frequency DCT coefficients does not result in a smooth filter and has drawbacks such as "ringing" near edges in the decoded picture. The DCT domain lowpass filter of the exemplary embodiment of the present invention is derived from a block mirror filter in the spatial domain. The filter coefficient values for the block mirror filter are, for example, optimized by numerical analysis in the spatial domain, and these values are then converted into coefficients of the DCT domain filter.

[0118] Although the exemplary embodiment shows DCT domain filtering in only the horizontal direction, DCT domain filtering can be done in either horizontal or vertical direction or both by combining horizontal and vertical filters.

[0119] 4) Derivation of the DCT Domain Filter Coefficients

[0120] One exemplary filter of the present invention is derived from two constraints: first, that the filter process image data on a block by block basis for each block of the image without using information from previous blocks of a picture; and second, that the filter reduce the visibility of block boundaries which occur when the filter processes boundary pixel values.

[0121] According to the first constraint, in the DCT based compression of an MPEG image sequence, for example, N×N DCT coefficients yield N×N spatial pixel values. Consequently, the exemplary embodiment of the present invention implements a DCT domain filter which only processes a current block of the received picture.

[0122] According to the second constraint, if the filter is simply applied to a block of spatial frequency coefficients, there is a transition of the filtering operation at the block boundary which is caused by an insufficient number spatial pixel values beyond the boundary to fill the residual of the filter. That is to say, coefficient values at the edge of a block cannot be properly filtered because the N-tap filter has values for only N/2 taps, the remaining values are beyond the boundary of the block. Several methods of supplying the missing pixel values exist: 1) repeat a predetermined constant pixel value beyond a boundary; 2) repeat the same pixel value as the boundary pixel value; and 3) mirror the pixel values of the block to simulate previous and subsequent blocks of pixel values adjacent to the processed block. Without prior information on the contents of the previous or subsequent block, the mirroring method of repeating pixel values is considered as a preferred method. Therefore, one embodiment of the present invention employs this mirroring method for the filter and is termed a "block mirror filter."

[0123] The following describes an exemplary embodiment which implements a horizontal block mirror filter that low-pass filters 8 input spatial pixel sample values of a block. If the size of input block is an 8×8 block matrix of pixel sample values, then a horizontal filtering can be done by applying the block mirror filter to each row of 8 pixel sample values. It will be apparent to one skilled in the art that the filtering process can be implemented by applying the filter coefficients columnwise to the block matrix, or that multidimensional filtering may be accomplished by filtering the rows and then filtering the columns of the block matrix.

[0124] **FIG. 4** shows an exemplary correspondence between the input pixel values x_0 through x_7 (group **X0**) and filter taps for an exemplary mirror filter for 8 input pixels which employs a 15 tap spatial filter represented by tap values h_0 through h_{14}. The input pixels are mirrored on the left side of group **X0**, shown as group **X1**, and on the right side of group **X0**, shown as group **X2**. The output pixel value of the filter is the sum of 15 multiplications of the filer tap coefficient values with the corresponding pixel sample values. **FIG. 4** illustrates the multiplication pairs for the first and second output pixel values.

[0125] The following shows that the block mirror filter in the spatial domain is equivalent to DCT domain filter. The mirror filtering is related to a circular convolution with 2N points (N=8).

[0126] Define the vector x' as shown in equation (4).

$$x'(n)=x(n)+x(2N-1-n);\ 0<=n<=2N-1 \tag{4}$$

[0127] In the case of N=8,

$$x'=(x0, x1, x2, x3, x4, x5, x6, x7, x7, x6, x5, x4, x3, x2, x1, x0)$$

[0128] Rearranging the filter tap values h_0 through h_{14}, and denoting the rearranged values by h'

$$h'=(h7, h8, h9, h10, h11, h12, h13, h14, 0, h0, h1, h2, h3, h4, h5, h6)$$

[0129] Therefore, the mirror filtered output y(n) is a circular convolution of x'(n) and h'(n) which is given by equation (5).

$$y(n)=x'(n)\otimes h'(n) \tag{5}$$

[0130] Which is equivalent to equation (6).

$$y(n)=\sum_{k=0}^{2N-1} x'[n-k]\cdot h'(n) \tag{6}$$

[0131] where x'[n−k] is a circular modulo of x'(n) and

$$x'[n]=x'(n) \text{ for } n>=0$$

$$x'[n]=x'(n+2N) \text{ for } n<0.$$

[0132] The circular convolution in the spatial domain shown in equation (5) corresponds to the scalar multiplication in the Discrete Fourier Transform (DFT) domain. Defining Y(k) as the DFT of y(n), then equation (5) becomes equation (7) in the DFT domain.

$$Y(k)=X'(k)\cdot H'(k) \tag{7}$$

[0133] where X'(k) and H'(k) are the DFTs of x'(n) and h'(n) respectively.

[0134] Equations (4) through (7) are valid for a filter with a number of taps less than 2N. In addition, the filter is limited to be a symmetric filter with an odd number of taps, with these constraints H'(k) is a real number. Therefore, X'(k), the DFT of x'(n), can be weighed with a real number H'(k) in the DFT frequency-domain instead of 2N multiplication and 2N addition operations in the spatial domain to implement the filtering operation. The values of X'(k) are very closely related to the DCT coefficients of the original N-point x(n), because an N-point DCT of x(n) is obtained by the 2N-point DFT of x'(n) which is the joint sequence composed of x(n) and its mirror, x(2N−1−n).

[0135] The following describes the derivation of the DFT coefficients of the spatial filter, H'(k), by assuming a symmetric filter having an odd number of taps, 2N−1, which is h(n)=h(2N−2−n), and equivalently h'(n)=h'(2N−n) and h'(N)=0. Define H'(k) as in equation (8).

$$H'(k)=\sum_{n=0}^{2N-1} h'(n)\cdot W_{2N}^{kn}=h'(0)+2\sum_{n=1}^{N-1} h'(n)\cdot\cos\frac{\pi kn}{N} \tag{8}$$

[0136] where $W_{2N}^{kn}=\exp\{-2\pi kn/(2N)\}$; and H'(k)= H'(2N−k).

[0137] The inventor has determined that the 2N-point DFT of x'(n), X'(k), can be expressed by its DCT coefficients as shown in equation (9).

$$X'(k)=\sum_{n=0}^{2N-1} x'(n)\cdot W_{2N}^{kn}=W_{2N}^{-k/n}\cdot\sum_{n=1}^{N-1} 2x(n)\cdot\cos\frac{\pi k(2n+1)}{2N} \tag{9}$$

[0138] whereas the DCT coefficient of x (n), C(k), is given by equation (10).

$$C(k)=\sum_{n=1}^{N-1} 2x(n)\cdot\cos\frac{\pi k(2n+1)}{2N}=W_{2N}^{k/n}\cdot X'(k)\ \text{for}\ 0\le k\le N-1 \tag{10}$$

[0139] and C(k)=0 elsewhere.

[0140] The values of X'(k), the DFF coefficients of x'(n), can be expressed by C(k), the DCT coefficients of x'(n) by the matrix of equation (11).

$$X'(k)=\begin{bmatrix} W_{2N}^{-k/2}\cdot C(k) & \text{for} & k\le N-1 \\ 0 & \text{for} & k=N \\ -W_{2N}^{-k/2}\cdot C(2N-k) & \text{for} & N+1\le k\le 2N-1 \end{bmatrix} \tag{11}$$

[0141] The original spatial pixel sample values, x(n), can be also obtained by IDCT (Inverse Discrete Cosine Transformation) shown in equation (12).

$$x(n)=\frac{1}{N}\sum_{k=0}^{N-1}\alpha(k)\cdot C(k)\cdot\cos\frac{\pi k(n+1/2)}{N} \tag{12}$$

[0142] where α(k)=½ for k=0 and 1 otherwise.

[0143] The values of y(n) for 0<=n<=N−1, are obtained by IDFR of X'(k)H'(k) given in (13):

$$\begin{aligned} y(n)&=\frac{1}{2N}\cdot\left\{\sum_{k=0}^{2N-1} X'(k)\cdot H'(k)\cdot W_{2N}^{-kn}\right\} \\ &=\frac{1}{2N}\left\{\sum_{k=0}^{N-1} C(k)\cdot H'(k)\cdot W_{2N}^{-k(n+1/2)}+\sum_{k=N+1}^{2N-1} -C(2N-k)\cdot H'(2N-k)\cdot W_{2N}^{-k(n+1/2)}\right\} \\ &=\frac{1}{N}\sum_{k=0}^{N-1}\alpha(k)\cdot\{C(k)\cdot H'(k)\}\cdot\cos\frac{\pi k(n+1/2)}{N} \end{aligned} \tag{13}$$

[0144] The values y(n) of equation (13) are the spatial values of the IDCT of C(k)H'(k). Therefore, the spatial filtering can be replaced by the DCT weighting of the input frequency-domain coefficients representing the image block with H'(k) and then performing the IDCT of the weighted values to reconstruct the filtered pixel values in the spatial domain.

[0145] One embodiment of the exemplary block mirror filtering of the present invention is derived as by the following steps: 1) a one dimensional lowpass symmetric filter is chosen with an odd number of taps, which is less than 2N taps; 2) the filter coefficients are increased to 2N values by padding with zero's; 3) the filter coefficients are rearranged so that the original middle coefficient goes to the zeroth position by a left circular shift; 4) the DFT coefficients of the rearranged filter coefficients are determined; 5) the DCT coefficients are multiplied with the real number DFT coefficients of the filter; and 6) an inverse discrete cosine transform (IDCT) of the filtered DCT coefficients is performed to provide a block of lowpass-filtered pixels prepared for decimation.

[0146] The cutoff frequency of the lowpass filter is determined by the decimation ratio. For one exemplary embodiment, the cutoff frequency is π/3 for a 3:1 decimation and π/2 for a 2:1 decimation, where π corresponds to one-half of sampling frequency.

[0147] A DCT domain filter in MPEG and JPEG decoders allows memory requirements to be reduced because the inverse quantizer and IDCT processing of blocks already exists in the decoder of the prior art, and only the additional scalar multiplication of DCT coefficients by the DCT domain filter is required. Therefore, a separate DCT domain filter block multiplication is not physically required in a particular implementation; another embodiment of the present invention simply combines the DCT domain filter coefficients with the IDCT processing coefficients and applies the combined coefficients to the IDCT operation.

[0148] For the exemplary down conversion system of the present invention, the horizontal filtering and decimations of the DCT coefficients were considered; and the following are two exemplary implementations for:

[0149] 1. 1920H by 1080V interlace to 640 by 1080 interlace conversion (Horizontal 3:1 decimation).

[0150] 2. 1280H by 720V progressive to 640 by 720 progressive conversion (Horizontal 2:1 Decimation)

[0151] Table 8 shows the DCT block mirror filter (weighting) coefficients; in Table 8 the numbers in the parenthesis are 10 bit 2's complementary representations. The "*" of Table 8 indicates an out of bound value for the 10 bit 2's complement representation because the value is more than 1;

however, as is known by one skilled in the art, the multiplication of the column coefficients of the block by the value indicated by the * can be easily implemented by adding the coefficient value to the coefficient multiplied by the fractional value (remainder) of the filter value.

TABLE 8

	3:1 Decimation	2:1 Decimation
H[0]	1.000000000000000 (511)	1.0000000000000000 (511)
H[1]	0.986934590759779 (505)	1.0169628157945179 (*)
H[2]	0.790833583171840 (405)	1.0000000000000000 (511)
H[3]	0.334720213357461 (171)	0.82247656390475166 (421)
H[4]	−0.0323463361027473 (−17)	0.46728234862006007 (239)
H[5]	−0.0377450036954524 (−19)	0.10634261847436199 (54)
H[6]	−0.0726889747390758 (37)	−0.052131780559049545 (−27)
H[7]	0.00954287167337307 (5)	−0.003489737967467715 (−2)

[0152] These horizontal DCT filter coefficients weight each column in the 8×8 block of DCT coefficients of the encoded video image. For example, the DCT coefficients of column zero are weighted by H[0], and the DCT coefficients of the first column are weighted by H[1] and so on.

[0153] The above description illustrates a horizontal filter implementation using one-dimensional DCTs. As is known in the digital signal processing art, such processing can be extended to two-dimensional systems. Equation (12) illustrates the IDCT for the one-dimensional case, consequently, equation (12') gives the more general two dimensional IDCT:

$$f(x, y) = \frac{2}{N}\sum_{u=0}^{N-1}\sum_{v=0}^{N-1} C(u)C(v)F(u, v)\cos\frac{(2x+1)u\pi}{2N}\cos\frac{(2y+1)v\pi}{2N} \qquad (12')$$

$$\text{where } C(u), C(v) \text{ are} \begin{cases} \frac{1}{\sqrt{2}} & u, v = 0 \\ 1 & \text{otherwise} \end{cases}$$

[0154] where f(x,y) is the spatial domain representation, x and y are spatial coordinates in the sample domain, and u,v are the coordinates in the transform domain. Since the coefficients C(u), C(v) are known, as are the values of the cosine terms, only the transform domain coefficients need to be provided for the processing algorithms.

[0155] For a two-dimensional system, the input sequence is now represented as a matrix of values, each representing the respective coordinate in the transform domain, and the matrix may be shown to have sequences periodic in the column sequence with period M, and periodic in the row sequence with period N, N and M being integers. A two-dimensional DCT can be implemented as a one dimensional DCT performed on the columns of the input sequence, and then a second one dimensional DCT performed on the rows of the DCT processed input sequence. Also, as is known in the art, a two-dimensional IDCT can be implemented as a single process.

[0156] **FIG. 5** shows an exemplary implementation of the filter for down-conversion for a two-dimensional system processing the horizontal and vertical components implemented as cascaded one-dimensional IDCTs. As shown in **FIG. 5**, the DCT Filter Mask **216** and IDCT **218** of **FIG. 2** may be implemented by a Vertical Processor **510**, containing a Vertical DCT Filter **530** and a Vertical IDCT **540**, and a Horizontal Processor **520**, containing a horizontal DCT Filter and horizontal IDCT which are the same as those implemented for the vertical components. Since the filtering and IDCT processes are linear, the order of implementing these processes can be rearranged (e.g, horizontal and vertical DCT filtering first and horizontal and vertical IDCTs second, or vise-versa, or Vertical Processor **520** first and Horizontal Processor **510** (second)).

[0157] In the particular implementation shown in **FIG. 5**, the Vertical Processor **510** is followed by a block Transpose Operator **550**, which switches the rows and columns of the block of vertical processed values provided by the Vertical Processor. This operation may be used to increase the efficiency of computation by preparing the block for processing by the Horizontal Processor **520**.

[0158] The encoded video block, for example an 8×8 block of matrix values, is received by the Vertical DCT filter **530**, which weights each row entry of the block by the DCT filter values corresponding to the desired vertical decimation. Next, the Vertical IDCT **540** performs the inverse DCT for the vertical components of the block. As described previously, since both processes simply perform a matrix multiplication and addition, the DCT LPF coefficients can be combined with the vertical DCT coefficients for matrix multiplications and addition operations. The Vertical Processor **510** then provides the vertically processed blocks to the Transpose Operator **550**, which provides the transposed block of vertically processed values to the Horizontal Processor **520**. The Transpose Operator **550** is not necessary unless the IDCT operation is only done by row or by column. The Horizontal Processor **520** performs the weighting of each column entry of the block by the DCT filter values corresponding to the desired horizontal filtering, and then performs the inverse DCT for the horizontal components of the block.

[0159] As described with reference to equation (12'), only coefficients in the transform domain are provided to the processing algorithms; and the operations are linear which allows mathematical operations on these coefficients only. The operations for the IDCT, as is readily apparent from equation (12'), form a sum of products. Consequently, a hardware implementation requires known coefficients to be stored in memory, such as a ROM (not shown), and a group of multiply and add circuits (not shown) which receives these coefficients from the ROM as well as selected coefficients from the matrix of input transform coordinates. For more advanced systems, a ROM-accumulator method may be used if the order of mathematical operations is modified according to distributed arithmetic to convert from a sum of products implementation to a bit-serial implementation. Such techniques are described in, for example, Stanley A. White, Applications of Distributed Arithmetic to Digital Signal Processing: A Tutorial Review, IEEE ASSP Magazine, July, 1989, which take advantage of symmetries in the computations to reduce a total gate count of the sum of products implementation.

[0160] In an alternative embodiment of the present invention, the DCT filter operation may be combined with the

inverse DCT (IDCT) operation. For such an embodiment, since the filtering and inverse transform operations are linear, the filter coefficients may be combined with the coefficients of the IDCT to form a modified IDCT. As is known in the art, the modified IDCT, and hence the combined IDCT and DCT downconversion filtering, may be performed through a hardware implementation similar to that of the simple IDCT operation.

[0161] c) Memory Subsystem

[0162] 1) Memory Access and Storage of Bitstream and Picture Data

[0163] As shown in **FIG. 1**B, the exemplary embodiment of the present invention employs an ATV Video Decoder **121** having a Memory Subsystem **174** which controls the storage and reading of information to and from Memory **130**. Memory Subsystem **174** provides picture data and bitstream data to Memory **130** for video decoding operations, and in the preferred embodiment, at least 2 pictures, or frames, are used for proper decoding of MPEG-2 encoded video data. An optional On-Screen Display (OSD) section in the Memory **130** may be available to support OSD data. The interface between the Memory Subsystem **174** and Memory **130** may be a Concurrent RDRAM interface providing a 500 Mbps channel, and three RAMBUS channels may be used to support the necessary bandwidth. An embodiment of the present invention having Picture processor **171**, Macroblock decoder **172**, and Memory subsystem **174** operating with external memory **130** may employ a system as described in U.S. Pat. No. 5,623,311 entitled MPEG VIDEO DECODER HAVING A HIGH BANDWIDTH MEMORY to Phillips et al., which is incorporated herein by reference. **FIG. 12** is a high level block diagram of such system of a video decoder having high bandwidth memory as employed by an exemplary embodiment of the present invention to decode MP@ML MPEG-2 pictures.

[0164] In summary, and described with relation to **FIG. 1**A and **FIG. 1B, U**.S. Pat. No. 5,623,311 describes a single, high bandwidth memory having a single memory port. The memory 130 holds input bitstream, first and second reference frames used for motion compensated processing, and image data representing the field currently being decoded. The decoder includes 1) circuitry (picture processor **171**) which stores and fetches the bitstream data, 2) circuitry that fetches the reference frame data and stores the image data for the currently decoded field in block format (Macroblock decoder **172**), and fetches the image data for conversion to raster-scan format (display section **173**). The memory operations are time division multiplexed using a single common memory port with a defined memory access time period, called Macroblock Time (MblkT) for control operations. A digital phase locked loop (DPLL) **122** counts pulses of a 27 MHz system clock signal, defined in the MPEG-2 standard, to generate a count value. The count value is compared to a succession of externally supplied system clock reference (SCR) values to generate a phase difference signal that is used to adjust the frequency of the signal produced by the digital phase locked loop.

[0165] Table 9 summarizes the picture storage requirements for DC configurations to support multiple formats:

TABLE 9

Format	Pixels (H)	Macroblocks (H)	Pixels (V)	Macroblocks (V)	Bits per Picture	Storage (3 Pictures)
1920 × 1088 DC	640	40	1088	68	8,355,840	25,067,520
1280 × 720 DC	640	40	720	45	5,529,600	16,588,800
704 × 480	704	44	480	30	4,055,040	12,165,120
640 × 480	640	40	480	30	3,686,400	12,165,120

[0166] For DC mode, 1920×1080 pictures are reduced by a factor of 3 horizontally, yielding a 640×1080 picture; 1280×720 pictures are reduced by a factor of 2 horizontally yielding a 640×720 picture. The 704×480 and 640×480 pictures are not required to be reduced in DC mode.

[0167] Accommodating multiple DC pictures in Memory **130** also requires supporting respective decoding operations according to corresponding picture display timing. For example, progressive pictures occur at twice the rate of interlaced pictures (60 or 59.94 Hz progressive vs. 30 or 29.97 Hz interlace) and, as a result, progressive pictures are decoded faster than interlaced pictures (60 or 59.94 Frames per second progressive vs. 30 or 29.97 Frames per second interlace). Consequently, the decoding rate is constrained by the display rate for the format, and if the less stringent 59.97 or 29.97 frames per second decoding rates are used rather than the 60 or 30 frames per second, one frame out of every 1001 frames may be dropped from the conversion. For convenience, decoding operations for a format may be measured in units of "Macroblock Time" (MblkT) defined as the period during which all decoding operations for a macroblock may be completed (clock cycles per macroblock decoding). Using this period as a measure, as defined in equation 14, control signals and memory access operations can be defined during the regularly occurring MblkT period.

$$\textit{MblkT}\ \text{(clock cycles/macroblock)}=\text{system clock rate (clock cycles/sec.)/Frame rate (frames/sec.)/Picture Size (macroblocks/frame)} \tag{14}$$

[0168] In addition, a blanking interval may not be used for picture decoding of interlaced pictures, and an 8-line margin to the time period is added to account for decoding 8 lines simultaneously (interlaced) and 16 lines simultaneously (progressive). Therefore, an adjustment factor (AdjFact) may be added to the MblkT, as given in equations (15) and (16).

$$\text{AdjFact (interlace)}=(\text{total lines}-\text{vertical blank lines}-8)/\text{total lines} \tag{15}$$

$$\text{AdjFact (progressive)}=(\text{total lines}-16)/\text{total lines} \tag{16}$$

[0169] Table 10 lists MblkT for each of the supported formats:

TABLE 10

Format	Mblk per frame	Frame Time (msec)	MblkT (clks)	Adjust-ment factor	Active Decoding MblkT
1920 × 1080	8160	33.33	255.3	0.9729	248.4
1280 × 720	3600	16.67	289.4	0.9787	283.2
704 × 480 P	1320	16.67	789.1	0.9695	765.1
704 × 480 I	1320	33.33	1578	0.9419	1486.6
640 × 480 P	1200	16.67	868	0.9695	841.6
640 × 480 I	1200	33.33	1736	0.9419	1635.3

[0170] In an exemplary embodiment of the present invention, a MblkT of 241 clocks is employed for all formats to meet the requirement of the fastest decode time including a small margin. For such chosen MblkT period, slower format decoding includes periods in which no decoding activities occur; consequently, a counter may be employed to reflect the linear decoding rate with a stall generated to stop decoding in selected MblkT intervals.

[0171] Referring to **FIG. 1**B, the Memory Subsystem **174** may provide internal picture data interfaces to the Macroblock decoder **172** and display section **173**. A decoded macroblock interface accepts decoded macroblock data and stores it in correct memory address locations of Memory **130** according to a memory map defined for the given format. Memory addresses may be derived from the macroblock number and picture number. The macroblocks may be received as a macroblock row on three channels, one channel per 16 Mb memory device (**131-136** of **FIG. 1A**) at the system clock rate. Each memory device may have two partitions for each picture, each partition using an upper and lower address. For interlaced pictures, the one partition carries Field **0** data and the other partition carries Field **1** data, and for progressive pictures, both upper and lower partitions are treated as a single partition and carry data for the entire frame. Every macroblock is decoded and stored for every picture, except for 3:2 pull down mode where decoding is paused for an entire field time period. In 3:2 pulldown mode, a signal having a frame rate of 24 frames per second is displayed at 60 frames (or fields) per second by displaying one frame twice and the next frame three times.

[0172] A reference macroblock interface supplies stored, previously decoded picture data to the macroblock decoder **172** for motion compensation. The interface may supply two, one or no macroblocks corresponding to bi-directional predictive (B) encoding, uni-directional predictive (P) encoding or intra (I) encoding. Each reference block is supplied using two channels, and each channel contains one-half of a macroblock. For DC mode employing a decimation factor of 2, each retrieved half macroblock is 14×9 (Y), 10×5 (C_R) and 10×5 (C_B) to allow for up-sampling and half-pixel resolution.

[0173] A display interface provides retrieved pixel data to the display section **173**, multiplexing Y, C_R, and C_B pixel data on a single channel. Two display channels may be provided to support conversion from/to interlaced to/from progressive formats. In DC mode, a first channel may provide up to 4 lines of interlaced or progressive data simultaneously and a second channel may provide up to 4 lines of interlaced data.

[0174] For downconversion, downsampled macroblocks are merged into a single macroblock for storage. The downsampling process of the DC mode is described subsequently with reference to **FIG. 6**A and **FIG. 6B**. **FIG. 6C** illustrates a merging process of two macroblocks into a single macroblock for storage in memory **130** for downconversion by 2 horizontally. **FIG. 6D** illustrates a merging process of three macroblocks into a single macroblock for storage in memory **130** for downconversion by 3 horizontally.

[0175] d) Downsampling and Display Conversion of the Display Section

[0176] 1) Down Sampling for Low Resolution Formats

[0177] Down sampling is accomplished by the Down Sampling process **232** of **FIG. 2B** to reduce the number of pixels in the downconverted image. **FIG. 6A** shows the input and decimated output pixels for a 4:2:0 signal format for 3:1 decimation. **FIG. 6B** shows the input and decimated output pixels for 4:2:0 chrominance type 2:1 decimation. Table 11 gives the legend identification for the Luminance and Chrominance pixels of **FIG. 6**A and **FIG. 6B**. The pixel positions before and after the down conversion of **FIGS. 6A and 6B** are the interlaced (3:1 decimation) and progressive (2:1 decimation) cases respectively.

TABLE 11

Symbol	Pixel
+	Luminance Before Decimation
×	Chrominance Before Decimation
|	Luminance After decimation
Δ	Chrominance After Decimation

[0178] For down sampling of the interlaced image, which may be the conversion from a 1920 by 1080 pixel image to a 640 by 1080 pixel horizontally compressed image, two out of every three pixels are decimated on the horizontal axis. For the exemplary 3:1 decimation, there are three different macroblock types after the down conversion process. In **FIG. 6**A, original macroblocks were denoted by MB**0**, MB**1**, MB**2**. The down sampled luminance pixels in MB**0** start at the first pixel in the original macroblock, but in MB**1** and MB**2** the down-sampled pixels start at the third and the second pixels. Also the number of down-sampled pixels in each macroblock are not the same. In MB**0**, there are 6 down-sampled pixels horizontally, but 5 pixels in MB**1** and MB**2**. These three MB types are repeating, therefore Modulo **3** arithmetic is to be applied. Table 12 summarizes the number of downsampling pixels and offsets for each input macroblock MB**0**, MB**1**, MB**2**.

TABLE 12

	MB0	MB1	MB2
No. of Down Sampled Luminance Pixels	6	5	5
No. of Down Sampled Chrominance Pixels	3	3	2
Offset of 1st Down Sampled Luminance Pixel	0	2	1
Offset of 1st Down Sampled Chrominance Pixel	0	1	2

[0179] For downsampling of the progressive format image the luminance signal is subsampled for every second sample horizontally. For the chrominance signal, the down-sampled pixel has a spatial position that is one-half pixel below the pixel position in the original image.

[0180] 2) Display Conversion

[0181] The display section **173** of the ATV Decoder **121** of **FIG. 1B** is used to format the stored picture information (the decoded picture information) for a particular display format. **FIG. 11A** is a high level block diagram illustrating the display section of the ATV Video Decoder **121** for an exemplary embodiment of the present invention.

[0182] Referring to **FIG. 11**A, two output video signals are supported, a first output signal VID_{out1} which supports any selected video format, and a second output signal VID_{out2} which supports 525I (CCIR-601) only. Each output signal is processed by separate sets of display processing elements **1101** and **1102**, respectively, which perform horizontal and vertical upsampling/downsampling. This configuration may be preferred when the display aspect ratio does not match the aspect ratio of the input picture. An optional On Screen Display (OSD) section **1104** may be included to provide on screen display information to one of the supported output signals VID_{out1} and VID_{out2} to form display signals V_{out1} or V_{out2}. All processing is performed at the internal clock rate except for control of the output signals V_{out1} or V_{out2} at Output Controllers **1126** and **1128**, which is done at the pixel clock rate. For the preferred embodiment, the pixel clock rate may be at the luminance pixel rate or at twice the luminance pixel rate.

[0183] Because the display sets of processing elements **1101** and **1102** operate similarly, only the operation of the display processing set **1101** is described. Referring to the display processing set **1101**, four lines of pixel data are provided from the memory **130** (shown in **FIG. 1A**) to the vertical processing block **282** (shown in **FIG. 2B**) in raster order. Each line supplies C_R,Y,C_B,Y data 32 bits at a time. Vertical Processing block **282** then filters the four lines down to one line and provides the filtered data in 32 bit C_RYC_BY format to horizontal processing block **284** (also shown in **FIG. 2B**). The horizontal processing block **284** provides the correct number of pixels for the selected raster format as formatted pixel data. Consequently, the filtered data rate entering the horizontal processing block **284** is not necessarily equal to the output data rate. In an upsampling case, the input data rate will be lower than the output data rate. In a down sampling case, the input data rate will be higher than the output data rate. The formatted pixel data may have background information inserted by optional background processing block **1110**.

[0184] As would be known to one skilled in the art, the elements of the display section **173** are controlled by a controller **1150**, which is set up by parameters read from and written to the microprocessor interface. The controller generates signal CNTRL, and such control is necessary to coordinate and to effect proper circuit operation, loading and transfer of pixels, and signal processing.

[0185] Data from the horizontal processing block **284**, data from a second horizontal processing block **284***a*, and HD (non processed) Video data on HD Bypass **1122** are provided to Multiplexer **118** which selects, under processor control (not shown), one video data stream which is provided to mixer **116** to combine the video data stream and optional OSD data from OSD processor **1104** into mixed output video data. The mixed video output data is then provided to MUXs **1120** and **1124**.

[0186] For the first set of processing elements **1101**, MUX **1120** may select from mixed output video data, HD data provided on HD bypass **1122**, or data from background insertion block **1110**. The selected data is provided to output control processor **1126** which also receives the pixel clock. Output control processor **1126** then changes the data clock rate from the internal processing domain to the pixel clock rate according to the output mode desired.

[0187] For the second processing elements **1102**, MUX **1124** may select from mixed output video data or data from background insertion block **1110***a*. The selected data is provided to output control processor **1128** which also receives the pixel clock. Output control processor **1128** then changes the data clock rate from the internal processing domain to the pixel clock rate according to the output mode desired. MUX **1132** provides either the received selected data (601 Data Out) of MUX **1124** or optional OSD data from OSD processor **1104**.

[0188] Raster Generation and Control processor **1130** also receives the pixel clock and includes counters (not shown) which generate the raster space, allowing control commands to be sent on a line by line basis to Display Control Processor **1140**. Display Control processor **1140** coordinates timing with the external memory **130** and starts the processing for each processing chain **1101** and **1102** on a line by line basis synchronized with the raster lines. Processor **1130** also generates the horizontal, vertical and field synchronization signals (H, V and F).

[0189] **FIGS. 11B through 11D** relate the output modes provided by Display section **173** shown in **FIG. 11A** of the Video Decoder **121** to the active blocks of **FIG. 1A**. **FIG. 11B** illustrates a 27 MHz Dual output mode which, for which the video data is 525P or 525I, first processor **1101** (shown in **FIG. 11A**) provides 525P video data to 27 MHz DAC **143** as well as 525I data (601 Data Out) to NTSC Encoder **152**. **FIG. 11C** illustrates that in 27 MHz single output mode, only 525I data (601 Data Out) is provided to NTSC encoder **152**. **FIG. 11D** illustrates a 74 MHz/27 MHz mode in which the output mode matches the input format and the video data is provided to either the 27 MHz DAC **143** or 74 MHz DAC **141** depending on the output format. The 74 MHz DAC is used for 1920×1088 and 1280×720 pictures; the 27 MHz DAC is used for all other output formats.

[0190] Display conversion of the downsampled image frames is used for display the image in a particular format. As noted previously, the Display Conversion block **280** shown in **FIG. 2B** includes the vertical processing block (VPF) **282** and horizontal processing block (HZPF) **284** which adjust the down converted and down sampled images for display on the lower resolution screen.

[0191] VPF **282** which, for the exemplary embodiment, is a vertical line interpolation processor implemented as a programmable polyphase vertical filter, and HZPF **284** which, for the exemplary embodiment, is a horizontal line interpolation processor also implemented as a programmable horizontal polyphase filter. The filters are programmable, which is a design option in order to accommodate display conversion for a number of display formats.

[0192] As shown in **FIG. 2**B, four lines of downsampled pixel data enter the VPF **282** in raster order. For the exemplary embodiment this data includes luminance (Y) and chrominance (C_R and C_B) pixel pairs which enter VPF **282** 32 bits at a time. VPF **282** filters the four lines of data into one line and passes this line to the HZPF **284** as 32 bit values each containing luminance and chrominance data in a YC_RYC_B, and HZPF **284** then generates the correct number of pixels to match the desired raster format.

[0193] **FIG. 7A** is a high level block diagram illustrating an exemplary filter suitable for use as the VPF **282** of one embodiment of the present invention. In the following, the VPF **282** is described as processing pairs of input pixels (each pair includes two luminance pixels, Y, pixel and a chrominance C_R or C_B, pixel) to produce a pair of output pixels. This facilitates processing of the 4:2:0 format because color pixels may be easily associated with their corresponding luminance pixels. One skilled in the art, however, would realize that only luminance pixels or only chrominance pixels may be so processed. In addition, the VPF **282** as described produces lines in progressive format. In another embodiment employing a dual output and supporting both a main output channel and a secondary output channel, a second VPF **282** may be added.

[0194] Referring to **FIG.** 7A, VPF **282** includes a VPF Controller **702**; first muliplexer network including Luminance Pixel MUXs (LP MUXs) **706**, **708**, **710**, and **712** and Chrominance Pixel MUXs (CP MUXs) **714**, **716**, **718**, and **720**; second multiplexer network including Luminance Filter MUXs (LF MUXs) **726**, **728**, **730** and **732** and Chrominance Filter MUXs (CF MUXs) **734**, **736**, **738** and **740**; Luminance Coefficient RAM **704**; Chrominance Coefficient RAM **724**; Luminance Coefficient Multipliers **742**, **744**, **746**, and **748**; Chrominance Coefficient Multipliers **750**, **752**, **754**, and **756**; Luminance Adders **760**, **762** and **764**; Chrominance Adders **766**, **768** and **770**; Round and Clip processors **772** and **776**; Demux/Registers **774** and **778**; and Output Register **780**.

[0195] The operation of the VPF **282** is now described. Vertical resampling is accomplished with two 4-Tap polyphase filters, one for the Luminance pixels and one for the Chrominance pixels. The following details operation of the filter for the Luminance pixels only, since the operation for the Chrominance pixels is similar, but points out those differences in the paths as they occur. Vertical filtering of Luminance pixels can use up to 8 phases in the 4-Tap polyphase filter and filtering of Chrominance pixels can use up to 16 phases in the 4-Tap polyphase filter for the exemplary embodiment. The VPF Controller **702**, at the beginning of a field or frame, resets the vertical polyphase filter, provides control timing to the first and second multiplexer networks, selects coefficient sets from Luminance Coefficient RAM **704** and Chrominance Coefficient RAM **724** for the polyphase filter phases, and includes a counter which counts each line of the field or frame as it is processed.

[0196] The VPF Controller **702**, in addition to coordinating the operation of the network of MUXs and the polyphase filters, keeps track of display lines by tracking the integer and fractional parts of the vertical position in the decoded picture. The integer part indicates which lines should be accessed and the fractional part indicates which filter phase should be used. Furthermore, use of modulo N arithmetic when calculating the fractional part allows less than 16 phases to be used, which may be efficient for exact downsampling ratios such as 9 to 5. The fractional part is always truncated to one of the modulo N phases that are being used.

[0197] As shown in **FIG.** 7A, luminance and chrominance pixel pairs from the four image lines are separated into a chrominance path and a luminance path. The 16 bit pixel pair data in the luminance path may be further multiplexed into an 8-bit even (Y-even) and 8-bit odd (Y-odd) format by LP MUXs **706**, **708**, **710**, and **712**, and the 16 bit pixel pair in the chrominance path into an 8-bit C_R and 8-bit C_B format by CP MUXs **714**, **716**, **718** and **720**. The luminance filter MUXs **706**, **708**, **710** and **712** are used to repeat pixel values of a line at the top and a line at the bottom at the boundaries of a decoded image in order to allow filter pixel boundary overlap in the polyphase filter operation.

[0198] Pixel pairs for the four lines corresponding to luminance pixel information and chrominance pixel information are then passed through the respective polyphase filters. Coefficients used by Multipliers **742**, **744**, **746** and **748** for weighting of pixel values for a filter phase are selected by the VPF Controller **702** based on a programmed up or down sampling factor. After combining the weighted luminance pixel information in Adders **760**, **762** and **764**, the value is applied to the Round and Clip processor **772** which provides eight bit values (since the coefficient multiplication occurs with higher accuracy). DEMUX register **774** receives the first 8 bit value corresponding to an interpolated 8 bit even (Y-even) luminance value and second 8-bit value corresponding to the interpolated 8-bit odd (Y-odd) value, and provides a vertical filtered luminance pixel pair in 16 bits. Register **780** collects and provides the vertical filtered pixels in the luminance and chrominance paths and provides them as vertically filtered 32 bit values containing a luminance and chrominance pixel pair.

[0199] **FIG. 7B** shows the spatial relationships between the coefficients and pixel sample space of the lines. The coefficients for the luminance and chrominance polyphase filter paths each have 40 bits allocated to each coefficient set, and there is one coefficient set for each phase. The coefficients are interpreted as fractions with a denominator of **512**. The coefficients are placed in the 40-bit word from left to right, C0 to C3. C0 and C3 are signed ten bit 2's complement values, and C1 and C2 are 10 bits which have a given range, for example, from −256 to 767, which are each subsequently converted to 11-bit 2's complement values.

[0200] **FIG. 7A** includes an optional luminance coefficient adjustment **782** and chrominance coefficient adjustment **784**. These coefficient adjustments **782** and **784** are used to derive the 11 bit 2's complement number for C1 and C2. If bits 8 and 9(the most significant bit) are both 1, then the sign of the eleven bit number is 1 (negative), otherwise the value is positive.

[0201] **FIG. 8A** is a high level block diagram illustrating an exemplary filter suitable for use as the HZPF **284** of one embodiment of the present invention. HZPF **284** receives a luminance and chrominance pixel information pair, which may be 32-bit data, from the VPD **282**. The HZPF **284** includes a HZPF Controller **802**; C_R latches **804**; C_B latches **806**; Y latches **808**; Selection MUXs **810**; Horizontal Filter Coefficient RAM **812**; Multiplying network **814**; Adding network **816**; Round and Clip processor **818**, DEMUX register **820** and output register **822**.

[0202] Horizontal resampling is accomplished by employing an 8 tap, 8 phase polyphase filter. Generation of display pixels is coordinated by the HZPF Controller **802** by tracking the integer and fractional parts of the horizontal position in the decoded and downsampled picture. The integer part indicates which pixels are to be accessed and the fractional part indicates which filter phase should be used. Using modulo N arithmetic when calculating the fractional part may allow for less than 8 phases to be used. For example, this may be useful if an exact downsampling ratio such as 9 to 5 is used. If the down-sampling ratio cannot be expressed as a simple fraction, the fractional part is truncated to one of the N phases. The HZPF **284** of the exemplary embodiment of the present invention filters pixel pairs, and uses alignment on even pixel boundaries to facilitate processing of the 4:2:0 formatted picture and to keep the C_R and C_B pixels (the color pixels) together with the corresponding Y pixels.

[0203] The operation of the HZPF **284** is now described with reference to **FIG. 8A**. The HZPF Controller **802**, at the beginning of a horizontal line, resets the horizontal polyphase filter, provides control timing to the first and second multiplexer networks, selects coefficient sets from Horizontal Coefficient RAM **812** for the C_R, C_B and Y filter coefficients for each of the polyphase filter phases, and selects each set of C_R, C_B and Y values for processing. In addition, when the horizontal position is near the left or right side of the line, the HZPF Controller **802** forces the edge pixel values to be repeated or set to 0 for use by the 8-tap polyphase filter. Any distortion in the image caused by this simplification is usually hidden in the overscan portion of the displayed image.

[0204] The pixel data received from the VPF **282** is separated into Y, C_R and C_B values, and these values are individually latched into C_R latches **804**; C_B latches **806**; and Y latches **808** for filtering. The HZPF Controller **802** then selects the Y, C_R and C_B values by an appropriate signal to the selection MUXs **810**. In the exemplary embodiment, there are more Y values than C_R or C_B values so the filter uses additional latches in the Y luminance latches **808**. At the same time, the HZPF Controller **802** selects the appropriate filter coefficients for the filter phase, and for the C_R or C_B or Y values, based on a programmed upsampling or downsampling value by a control signal to Horizontal Filter Coefficient RAM **812**.

[0205] Horizontal Filter Coefficient RAM **812** then outputs the coefficients to the respective elements of the Multiplying Network **814** for multiplication with the input pixel values to produce weighted pixel values, and the weighted pixel values are combined in Adding Network **816** to provide a horizontally filtered C_R, C_B or Y value.

[0206] After combining the weighted pixel values in Adding network **816**, the horizontally filtered pixel value is applied to the Round and Clip processor which provides eight-bit values (since the coefficient multiplication occurs with higher accuracy). DEMUX register **820** receives a series of 8 bit values corresponding to a C_R value, an 8 bit even (Y-even) Y value, an eight-bit C_B value, and finally an eight-bit value corresponding to an 8-bit odd (Y-odd) Y value; and the DEMUX register **820** multiplexes the values into a horizontally filtered luminance and chrominance pixel pair having a 32 bit value (Y even, C_R, Y odd, C_B). Register **822** stores and provides the pixel pair as a vertically and horizontally filtered 32 bit pixel luminance and chrominance pixel pair.

[0207] **FIG. 8B** illustrates the spatial relationships between coefficients stored in Horizontal Filter Coefficient RAM **812** and used in the polyphase filter and the pixel sample values of the down sampled image for a horizontal line. The coefficients for the exemplary embodiment are placed in a 64 bit word from left to right, C0 to C7. The coefficients C0, C1, C6 and C7 are signed 7-bit 2's complement values, and C2 and C5 are signed 8-bit 2's complement and C3 and C4 are signed 10-bit 2's complement values representing a range from −256 to 767. C3 and C4 are adjusted to derive the 11-bit 2's complement values. If both bit **8** and bit **9** (the most significant bit) are 1, then the sign of the 11-bit value is 1 (negative), otherwise the value is 0 (positive). All coefficients can be interpreted as fractions with a denominator of 512.

[0208] Table 13 lists coefficient for the VPF **282** and HZPF **284** for exemplary embodiments of the present invention performing the indicated format conversion.

TABLE 13

Coefficients for 750P to 525P or 750P to 525I
4 tap and 2 polyphase Luminance Vertical Filter

	Tap 0	Tap 1	Tap 2	Tap 3
Phase 0	103	306	103	0
Phase 1	10	246	246	10

[0209]

Coefficients for 750P to 525P or 750P to 525I
4 tap and 4 polyphase Chrominance Vertical Filter

	Tap 0	Tap 1	Tap 2	Tap 3
Phase 0	25	462	25	0
Phase 1	−33	424	145	−24
Phase 2	−40	296	296	−40
Phase 3	−24	145	424	−33

[0210]

Coefficients for 750P to 525I 4 tap and 2 polyphase Luminance Vertical Filter				
	Tap 0	Tap 1	Tap 2	Tap 3
Phase 0	145	222	145	0
Phase 1	84	172	172	84

[0211]

Coefficients for 750P to 525I 4 tap and 4 polyphase Chrominance Vertical Filter				
	Tap 0	Tap 1	Tap 2	Tap 3
Phase 0	57	398	57	0
Phase 1	−6	382	166	−30
Phase 2	−29	285	285	−29
Phase 3	−30	166	382	−6

[0212]

Coefficients for 1125I to 525P 4 tap and 8 polyphase Luminance Vertical Filter				
	Tap 0	Tap 1	Tap 2	Tap 3
Phase 0	20	472	20	0
Phase 1	−20	425	70	37
Phase 2	−52	472	161	−69
Phase 3	−62	397	238	−61
Phase 4	−63	319	319	−63
Phase 5	−61	238	397	−62
Phase 6	−69	161	472	−52
Phase 7	37	70	425	−20

[0213]

Coefficients for 1125I to 525P 4 tap and 16 polyphase Chrominance Vertical Filter				
	Tap 0	Tap 1	Tap 2	Tap 3
Phase 0	29	454	29	0
Phase 1	13	455	49	−5
Phase 2	0	445	73	−6
Phase 3	−9	428	101	−8
Phase 4	−15	404	132	−9
Phase 5	−18	376	165	−11
Phase 6	−20	345	201	−14
Phase 7	−19	310	237	−16
Phase 8	−18	274	274	−18
Phase 9	−16	237	310	−19
Phase 10	−14	201	345	−20
Phase 11	−11	165	376	−18
Phase 12	−9	132	404	−15
Phase 13	−8	101	428	−9
Phase 14	−6	73	445	0
Phase 15	−5	49	455	13

[0214] In the exemplary embodiments of the display conversion system horizontal conversion is, in part performed by the DCT domain filter **216**, and the downsampling Processor **232** shown in **FIG. 2B**. These provide the same number of horizontal pixels **(640)** whether the conversion is from 1125I or 750P. Accordingly, the HZPF **284** upsamples these signals to provide 720 active pixels per line and passes 525P or 525I signals unmodified, as these signals have 720 active pixels per line as set forth above in Tables 1 and 2, the values of the coefficients of the Horizontal Filter do not change for conversion to 480P/480I/525P/525I. These Horizontal filter coefficients are given in Table 14.

TABLE 14

Coefficients for Horizontal Filter								
	Tap 0	Tap 1	Tap 2	Tap 3	Tap 4	Tap 5	Tap 6	Tap 7
Phase 0	−8	13	−17	536	−17	13	−8	0
Phase 1	−13	28	−62	503	48	−9	0	17
Phase 2	−14	37	−90	477	134	−37	10	−5
Phase 3	−13	38	−96	406	226	−64	22	−7
Phase 4	−10	31	−85	320	320	−85	31	−10
Phase 5	−7	22	−64	226	406	−96	38	−13
Phase 6	−5	10	−37	134	477	−90	37	−14
Phase 7	17	0	−9	48	503	−62	28	−13

[0215] In addition, the programmable capability of the HZPF **284** allows for a nonlinear horizontal scan. **FIG. 9A** illustrates a resampling ratio profile which may be employed with the present invention. As shown the resampling ratio of the HZPF **284** may be varied across the horizontal scan line and may be changed in piecewise linear fashion. In the exemplary configuration of **FIG. 9A**, at the beginning of the scan line, the resampling ratio increases (or decreases) linearly until a first point on the scan line, where the resampling ration is held constant until a second point is reached where the resampling ratio decreases (or increases) linearly. Referring to **FIG. 9A**, h_initial_resampling ratio is the initial resampling ratio for a picture, h_resampling_ratio_change is the first change per pixel in the resampling ratio, —h_resampling_ratio_change is the second change per pixel in the resampling ratio, and h_resampling_ratio_hold column and h_resampling_ratio_reverse_column are the display column pixel points between which the resampling ratio is held constant. The value display_width is the last pixel (column) of the picture line.

[0216] **FIGS. 9B and 9C** show ratio profiles for mapping a 4:3 picture onto a 16:9 display. The ratios are defined in terms of input value to output value, so 4/3 is downsampling by 4 to 3 and 1/3 is up sampling 1 to 3. The ratio profiles shown in **FIGS. 9B and 9C** map an input picture image having 720 active pixels to a display having 720 active pixels. For example, in **FIG. 9B** mapping a 4:3 aspect ratio display to a 16×9 aspect ratio display uses a 4/3 downsampling, but to fill all the samples of the display requires a 1/1 average across the horizontal line. Consequently, the profile of **FIG. 9B** has the correct aspect ratio in the center between display pixels **240** and **480**, while the values at the sides are upsampled to fill the display. **FIGS. 9D and 9E** illustrate the profiles used for resizing from a 16×9 display image to a 4:3 display which is the inverse of the profiles shown in **FIGS. 9B and 9C**.

[0217] The effect of using resampling ratio profiles according to an exemplary embodiment of the present invention may be seen pictorially in **FIG. 10**. A video

transmission format having either a 16×9 or 4×3 aspect ratio may be displayed as either 16×9 or 4×3, but the original video picture may be adjusted to fit within the display area. Consequently, the original video picture may be shown in full, zoom, squeeze, or variable expand/shrink.

[**0218**] The system allows users to select a preferred mapping between the aspect ratio of the received video signal and the aspect ratio of the display device, when these aspect ratios are incompatible. As set forth above, the control processor **207** (shown in **FIG. 2A**) receives the aspect ratio of the received image from the parser **209**. The control processor **207** also determines the aspect ratio of the display device (not shown) which is connected to receive the output signal of the system. If, for example, the display device is connected to the S-video output **153** or the composite video output **154** (both shown in **FIG. 1A**), then the aspect ratio of the display device must be 4 by 3. If, however, the display device is connected to the primary video output port **146**, the aspect ratio may be either 4 by 3 or 16 by 9.

[**0219**] In the exemplary embodiment of the invention, the user specifies the aspect ratio of the display device as a part of a start-up process which may be invoked through the remote control IR receiver **208** (shown in **FIG. 2A**). The start up process may only be run if the video decoder system includes a primary output port and the system senses that there is a display device coupled to the primary output port. The start-up process may determine the display format of the display device (i.e. aspect ratio and maximum video resolution) in several ways. First, the process may present the user with a menu of possible display devices, each represented, for example, by a manufacturer name and model number. The user may then use the remote control device to select one of these display devices. The decoder system may be configured with a modem to periodically contact a central location to receive an updated list of display types as well as other updates to the programming of the controller **207**. Alternatively, this type of information may be encoded in the user data of a received ATSC video signal and the decoder may be programmed to access this information to update its internal programming.

[**0220**] Alternatively, to determine the aspect ratio of the display device, the user may be presented with a menu showing a 4 by 3 rectangle and a 16 by 9 rectangle and asked to indicate which is more like their display device. As another alternative, the user may asked to choose two menu choices, one listing possible video display resolutions and another listing possible aspect ratios.

[**0221**] As yet another alternative, the control processor **207** may program the on-screen display generator to produce a figure, for example a circle, in several different signal resolutions (e.g. 525I, 525P, 750P, 1180I and 1180P) and several different aspect ratios (e.g. 4 by 3 and 16 by 9), with text asking the viewer to press a button on the remote control device (not shown) when the best circle is displayed. The system may sequentially provide each of these images for a few seconds at the primary output to correlate the pressing of the button on the remote control device with the display of a particular image. This will provide the system with the needed information on image resolution and aspect ratio for the display device.

[**0222**] With information on the display format of the display device, the system may automatically adapt the received video signal for the best possible presentation on the display device. When, for example, there is a mismatch between the aspect ratio of the received video signal and the aspect ratio of the display device, this may be indicated to the viewer and the viewer may be allowed, by invoking a command using the remote control device (not shown), to sequentially see all of the possible conversions between the two aspect ratios, as shown in **FIGS. 9A through 9E** and **FIG. 10**, and to select one of these conversions to be used. This applies when the aspect ratio of the received video signal is 4 by 3 and the aspect ratio of the display device is 16 by 9 as well as when the aspect ratio of the received video signal is 16 by 9 and the aspect ratio of the display device is 4 by 3.

[**0223**] As a final alternative, the system may be configured to sense information provided by the display device in order to determine the display format. For example, a two-way data path may be provided via one of the output signal lines (Y, CR, CB) of the decoder system by which data in a digital register in the display device may be read. The data in this register may indicate a manufacturer and model number or a maximum resolution and aspect ratio for the display device. Alternatively, the display device may impose a direct-current (DC) signal on one or more of these lines and this signal may be sensed by the decoder system as an indication of the display format of the display device.

[**0224**] It is contemplated that a multi-sync monitor, which is capable of displaying video signals having several different display formats may be connected to the primary output port of the video decoder. In this instance, the video resolution component of the display type information recovered by the control processor **207** desirably includes an indication that the display is a multi-sync device so that the only format conversion that occurs is the aspect ratio adaptation shown in **FIGS. 9A through 9E** and **FIG. 10**, when the aspect ratio of the received video signal does not match that of the display device.

[**0225**] While exemplary embodiments of the invention have been shown and described herein, it will be understood that such embodiments are provided by way of example only. Numerous variations, changes, and substitutions will occur to those skilled in the art without departing from the spirit of the invention. Accordingly, it is intended that the appended claims cover all such variations as fall within the scope of the invention.

What is claimed:

1. A method for determining a display format of a display device, the method comprising the steps of:

sensing information provided by a display device having a display format, the sensed information being indicative of the display format of the display device; and

determining the display format of the display device responsive to the sensed information.

2. The method of claim 1, wherein the display device includes a register containing information indicative of the display format and wherein the sensing step comprises at least the step of:

reading the register to obtain the information indicative of the display format.

3. The method of claim 2, wherein the register includes a manufacturer and model number of the display device and wherein the determining step comprises at least the step of:

determining the display format for the display device based on the manufacturer and model number read from the register.

4. The method of claim 2, wherein the register includes an aspect ratio and resolution of the display device and wherein the determining step comprises at least the step of:

determining the display format for the display device based on the aspect ratio and resolution read from the register.

5. The method of claim 2, wherein the reading step comprises at least the step of:

reading the register over at least one video signal line coupled to the display device, the at least one video signal line configured as a two-way data path.

6. A method for determining display device characteristics, the method comprising the steps of:

sensing information provided by a display device having display parameters, the sensed information being indicative of the display parameters of the display device; and

determining the display device characteristics responsive to the sensed information.

7. The method of claim 6, wherein the display device includes a register containing data indicative of the display parameters and wherein the sensing step comprises at least the step of:

reading the register to obtain the data indicative of the display parameters.

8. The method of claim 7, wherein the register includes data indicative of a manufacturer and model number of the display device and wherein the determining step comprises at least the step of:

determining a display format for the display device responsive to the manufacturer and model number.

9. The method of claim 7, wherein the register includes data indicative of an aspect ratio and resolution of the display device and wherein the determining step comprises at least the step of:

determining a display format for the display device responsive to data indicative of the aspect ratio and resolution.

10. The method of claim 7, wherein the register includes data indicative of an aspect ratio of the display device and wherein the determining step comprises at least the step of:

determining the aspect ratio of the display device from the read data.

11. The method of claim 7, wherein the register includes data indicative of a resolution of the display device and wherein the determining step comprises at least the step of:

determining the resolution of the display device from the read data.

12. The method of claim 7, wherein the reading step comprises at least the step of:

reading the register over at least one video signal line coupled to the display device, the at least one video signal line configured as a two-way data path.

13. A video monitor including:

a display device;

a digital register coupled to the display device, the digital register including data indicative of at least one characteristic of the display device; and

a data path coupled to the digital register to provide the data indicative of the at least one characteristic of the display device to an output port.

14. The video monitor of claim 13, wherein the data path is a video signal path configured as a two-way data path.

15. The video monitor of claim 13, wherein the at least one characteristic includes an aspect ratio of the display.

16. The video monitor of claim 13, wherein the at least one characteristic includes a resolution of the display.

17. The television of claim 13, wherein the at least one characteristic includes manufacturer and model number of the display.

18. A video display system including:

a video display having a register including data indicative of at least one characteristic of the video display; and

a decoder configured to read the data in the register of the video display and determine the at least one characteristic of the video display from the data.

19. A video display system according to claim 18, wherein the at least one characteristic includes an aspect ratio of the display.

20. A video display system according to claim 18, wherein the at least one characteristic includes a resolution of the display.

* * * * *