US012044901B2

(12) **United States Patent**
Howell et al.

(10) **Patent No.: US 12,044,901 B2**
(45) **Date of Patent: Jul. 23, 2024**

(54) **SYSTEM FOR CHARGING EMBEDDED BATTERY IN WIRELESS HEAD-WORN PERSONAL ELECTRONIC APPARATUS**

(71) Applicant: **IngenioSpec, LLC**, San Jose, CA (US)

(72) Inventors: **Thomas A. Howell**, San Jose, CA (US); **David Chao**, Saratoga, CA (US); **C. Douglass Thomas**, Saratoga, CA (US); **Peter P. Tong**, Mountain View, CA (US)

(73) Assignee: **IngenioSpec, LLC**, San Jose, CA (US)

(*) Notice: Subject to any disclaimer, the term of this patent is extended or adjusted under 35 U.S.C. 154(b) by 0 days.

(21) Appl. No.: **18/375,893**

(22) Filed: **Oct. 2, 2023**

(65) **Prior Publication Data**

US 2024/0036361 A1 Feb. 1, 2024

Related U.S. Application Data

(63) Continuation of application No. 16/182,969, filed on Nov. 7, 2018, which is a continuation of application

(Continued)

(51) **Int. Cl.**
G02C 11/00 (2006.01)
G02C 5/14 (2006.01)

(Continued)

(52) **U.S. Cl.**
CPC ***G02C 11/10*** (2013.01); ***G02C 5/143*** (2013.01); ***G02C 5/146*** (2013.01); ***G02C 11/06*** (2013.01);

(Continued)

(58) **Field of Classification Search**
CPC G02C 1/00; G02C 11/10; G02C 11/06; G02C 5/001; G02C 5/02; G02C 5/14;

(Continued)

(56) **References Cited**

U.S. PATENT DOCUMENTS

320,558 A 6/1885 Hull
669,949 A 3/1901 Underwood

(Continued)

FOREIGN PATENT DOCUMENTS

CA 2233047 C 3/1998
CA 2316473 A1 7/2000

(Continued)

OTHER PUBLICATIONS

Notice of Allowance for U.S. Appl. No. 17/949,029, dated Oct. 30, 2023.

(Continued)

Primary Examiner — Jie Lei

(57) **ABSTRACT**

Techniques for providing eyewear or other head-worn personal electronic apparatus with electrical components are disclosed. The electrical components can provide electrical technology to eyewear or other head-worn personal electronic apparatus without having to substantially compromise aesthetic design principles. The electrical components can be partially or completely internal to eyewear or other head-worn personal electronic apparatus. The electrical components can operate independently or together with other electrical components provided elsewhere. Apparatus for presenting after-market electrical components are also disclosed.

59 Claims, 28 Drawing Sheets

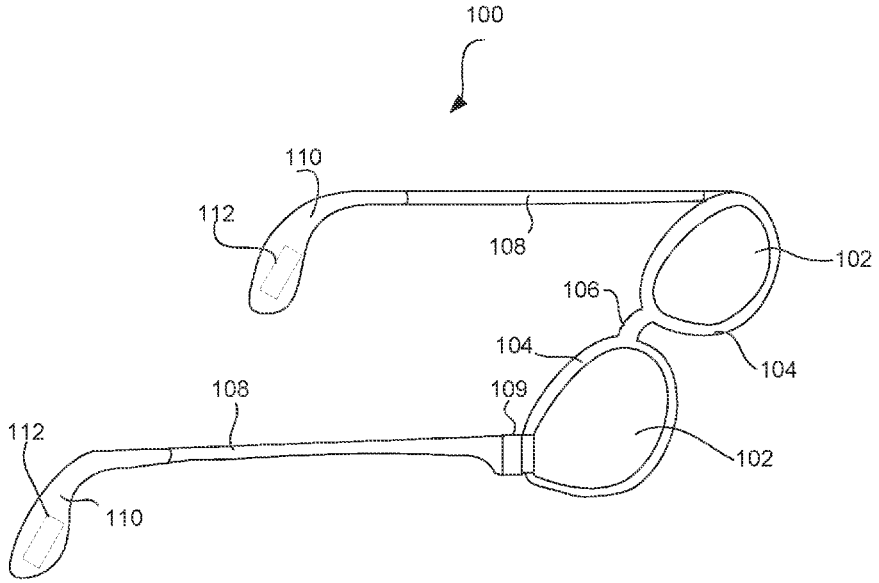

Related U.S. Application Data

No. 16/127,957, filed on Sep. 11, 2018, now Pat. No. 11,086,147, and a continuation of application No. 16/049,120, filed on Jul. 30, 2018, now Pat. No. 11,243,416, and a continuation of application No. 15/409,723, filed on Jan. 19, 2017, now abandoned, said application No. 16/049,120 is a continuation of application No. 15/375,423, filed on Dec. 12, 2016, now Pat. No. 10,061,144, said application No. 16/127,957 is a continuation of application No. 14/715,501, filed on May 18, 2015, now Pat. No. 10,330,956, said application No. 15/375,423 is a continuation of application No. 14/557,409, filed on Dec. 1, 2014, now Pat. No. 9,547,184, which is a continuation of application No. 13/955,336, filed on Jul. 31, 2013, now Pat. No. 8,905,542, said application No. 15/409,723 is a continuation of application No. 13/831,512, filed on Mar. 14, 2013, now Pat. No. 9,690,121, said application No. 14/715,501 is a continuation of application No. 13/367,346, filed on Feb. 6, 2012, now Pat. No. 9,033,493, said application No. 13/955,336 is a continuation of application No. 13/085,402, filed on Apr. 12, 2011, now Pat. No. 8,500,271, said application No. 13/831,512 is a continuation of application No. 12/806,312, filed on Aug. 10, 2010, now Pat. No. 8,465,151, which is a continuation-in-part of application No. 12/462,286, filed on Jul. 31, 2009, now Pat. No. 8,109,629, said application No. 13/367,346 is a continuation of application No. 12/462,286, filed on Jul. 31, 2009, now Pat. No. 8,109,629, said application No. 12/806,312 is a continuation-in-part of application No. 12/317,043, filed on Dec. 18, 2008, now Pat. No. 7,771,046, which is a continuation of application No. 12/214,435, filed on Jun. 19, 2008, now Pat. No. 7,481,531, which is a continuation of application No. 11/891,411, filed on Aug. 9, 2007, now Pat. No. 7,401,918, said application No. 12/462,286 is a continuation of application No. 11/580,222, filed on Oct. 11, 2006, now Pat. No. 7,581,833.

(60) Provisional application No. 60/846,150, filed on Sep. 20, 2006, provisional application No. 60/787,850, filed on Apr. 1, 2006, provisional application No. 60/725,896, filed on Oct. 11, 2005, provisional application No. 60/725,999, filed on Oct. 11, 2005.

(51) **Int. Cl.**
G02C 11/06 (2006.01)
H02J 7/00 (2006.01)

(52) **U.S. Cl.**
CPC ***H02J 7/0045*** (2013.01); *G02C 2200/08* (2013.01)

(58) **Field of Classification Search**
CPC G02C 5/22; G02C 5/143; G02C 5/146; G02C 2200/08; G02B 27/01; G02B 27/017; G02B 27/0176; G02J 7/0045
USPC 351/158, 41, 111, 121, 123, 124; 359/13, 359/629–633; 381/381, 327, 328, 370, 381/380
See application file for complete search history.

(56) **References Cited**

U.S. PATENT DOCUMENTS

1,255,265	A	2/1918	Zachara
1,917,745	A	7/1933	Weiss
2,249,572	A	7/1941	Lieber
2,638,532	A	5/1953	Brady
2,725,462	A	11/1955	Vorgang
2,794,085	A	5/1957	De Angelis
2,818,511	A	12/1957	Ullery et al.
2,830,132	A	4/1958	Borg
2,874,230	A	2/1959	Carlson
2,904,670	A	9/1959	Calmes
3,060,308	A	10/1962	Fortuna
3,104,290	A	10/1963	Rosemond et al.
3,119,903	A	1/1964	Rosemond et al.
3,597,054	A	8/1971	Winter
3,710,115	A	1/1973	Jubb
3,858,001	A	12/1974	Bonne
3,883,701	A	5/1975	Delorenzo
4,165,487	A	8/1979	Corderman
4,254,451	A	3/1981	Cochran, Jr.
4,283,127	A	8/1981	Rosenwinkel et al.
4,322,585	A	3/1982	Liautaud
4,348,664	A	9/1982	Boschetti et al.
4,389,217	A	6/1983	Baughman et al.
4,526,473	A	7/1985	Zahn, III
4,535,244	A	8/1985	Burnham
4,608,492	A	8/1986	Burnham
4,683,587	A	7/1987	Silverman
4,751,691	A	6/1988	Perera
4,757,714	A	7/1988	Purdy et al.
4,773,095	A	9/1988	Zwicker et al.
4,806,011	A	2/1989	Bettinger
4,822,160	A	4/1989	Tsai
4,822,161	A	4/1989	Jimmy
4,851,686	A	7/1989	Pearson
4,852,988	A	8/1989	Velez et al.
4,856,086	A	8/1989	McCullough
4,859,047	A	8/1989	Badewitz
4,882,598	A	11/1989	Wulf
4,882,769	A	11/1989	Gallimore
4,904,078	A	2/1990	Gorike
4,942,629	A	7/1990	Stadlmann
4,962,469	A	10/1990	Ono et al.
4,967,268	A	10/1990	Lipton et al.
4,975,584	A	12/1990	Benjamin et al.
4,985,632	A	1/1991	Bianco et al.
5,008,548	A	4/1991	Gat
5,015,086	A	5/1991	Okaue et al.
5,020,150	A	5/1991	Shannon
5,026,151	A	6/1991	Waltuck et al.
5,036,311	A	7/1991	Moran et al.
5,050,150	A	9/1991	Ikeda
5,064,410	A	11/1991	Frenkel et al.
5,093,576	A	3/1992	Edmond et al.
5,106,179	A	4/1992	Kamaya et al.
5,144,344	A	9/1992	Takahashi et al.
5,148,023	A	9/1992	Hayashi et al.
5,151,600	A	9/1992	Black
5,161,250	A	11/1992	Ianna et al.
5,172,256	A	12/1992	Sethofer et al.
5,184,156	A	2/1993	Black et al.
5,264,877	A	11/1993	Hussey
5,306,917	A	4/1994	Black et al.
5,353,378	A	10/1994	Hoffman et al.
5,359,370	A	10/1994	Mugnier
5,359,444	A	10/1994	Piosenka et al.
5,367,345	A	11/1994	da Silva
5,379,464	A	1/1995	Schleger et al.
5,382,986	A	1/1995	Black et al.
5,394,005	A	2/1995	Brown et al.
5,452,026	A	9/1995	Marcy, III
5,452,480	A	9/1995	Ryden
5,455,637	A	10/1995	Kallman et al.
5,455,640	A	10/1995	Gertsikov
5,457,751	A	10/1995	Such
5,463,428	A	10/1995	Lipton et al.

(56) **References Cited**

U.S. PATENT DOCUMENTS

5,475,798	A	12/1995	Handlos
5,495,576	A	2/1996	Ritchey
5,500,532	A	3/1996	Kozicki
D369,167	S	4/1996	Hanson et al.
5,510,961	A	4/1996	Peng
5,513,384	A	4/1996	Brennan et al.
5,519,781	A	5/1996	Kurkurudza
5,533,130	A	7/1996	Staton
5,541,641	A	7/1996	Shimada
5,581,090	A	12/1996	Goudjil
5,583,795	A	12/1996	Smyth
5,585,871	A	12/1996	Linden
5,589,398	A	12/1996	Krause et al.
5,590,417	A	12/1996	Rydbeck
5,606,743	A	2/1997	Vogt et al.
5,608,808	A	3/1997	da Silva
5,634,201	A	5/1997	Mooring
5,671,035	A	9/1997	Barnes
5,686,727	A	11/1997	Reenstra et al.
5,694,475	A	12/1997	Boyden
5,715,323	A	2/1998	Walker
5,737,436	A	4/1998	Boyden et al.
5,777,715	A	7/1998	Kruegle et al.
5,790,311	A	8/1998	Togino
5,818,381	A	10/1998	Williams
5,819,183	A	10/1998	Voroba et al.
5,835,185	A	11/1998	Kallman et al.
5,841,507	A	11/1998	Barnes
5,900,720	A	5/1999	Kallman et al.
5,903,395	A	5/1999	Rallison et al.
5,923,398	A	7/1999	Goldman
5,941,837	A	8/1999	Amano et al.
5,946,071	A	8/1999	Feldman
5,949,516	A	9/1999	McCurdy
5,966,680	A	10/1999	Butnaru
5,966,746	A	10/1999	Reedy et al.
5,980,037	A	11/1999	Conway
5,988,812	A	11/1999	Wingate
5,991,085	A	11/1999	Rallison et al.
5,992,996	A	11/1999	Sawyer
5,995,592	A	11/1999	Shirai et al.
6,010,216	A	1/2000	Jesiek
6,013,919	A	1/2000	Schneider et al.
6,028,627	A	2/2000	Helmsderfer
6,046,455	A	4/2000	Ribi et al.
6,060,321	A	5/2000	Hovorka
6,061,580	A	5/2000	Altschul et al.
6,091,546	A	7/2000	Spitzer
6,091,832	A	7/2000	Shurman et al.
6,099,124	A	8/2000	Hidaji
6,115,177	A	9/2000	Vossler
6,132,681	A	10/2000	Faran et al.
6,145,983	A	11/2000	Schiffer
6,154,552	A	11/2000	Koroljow et al.
6,163,281	A	12/2000	Torch
6,176,576	B1	1/2001	Green et al.
6,225,897	B1	5/2001	Doyle et al.
6,231,181	B1	5/2001	Swab
6,236,969	B1	5/2001	Ruppert et al.
6,243,578	B1	6/2001	Koike
6,244,703	B1	6/2001	Resnikoff et al.
6,259,367	B1	7/2001	Klein
6,270,466	B1	8/2001	Weinstein et al.
6,292,213	B1	9/2001	Jones
6,292,685	B1	9/2001	Pompei
6,301,050	B1	10/2001	DeLeon
6,301,367	B1	10/2001	Boyden et al.
6,307,526	B1	10/2001	Mann
6,311,155	B1	10/2001	Vaudrey et al.
6,343,858	B1	2/2002	Zelman
6,346,929	B1	2/2002	Fukushima et al.
6,349,001	B1	2/2002	Spitzer
6,349,422	B1	2/2002	Schleger et al.
6,409,335	B1	6/2002	Lipawsky
6,409,338	B1	6/2002	Jewell
6,426,719	B1	7/2002	Nagareda et al.
6,431,705	B1	8/2002	Linden
6,433,760	B1	8/2002	Vaissie et al.
6,474,816	B2	11/2002	Butler et al.
6,478,736	B1	11/2002	Mault
6,491,391	B1	12/2002	Blum et al.
6,506,142	B2	1/2003	Itoh et al.
6,511,175	B2	1/2003	Hay et al.
6,513,532	B2	2/2003	Mault et al.
6,517,203	B1	2/2003	Blum et al.
6,539,336	B1	3/2003	Vock et al.
6,542,081	B2	4/2003	Torch
6,546,101	B1	4/2003	Murray et al.
6,554,763	B1	4/2003	Amano et al.
6,563,532	B1	5/2003	Strub et al.
6,582,075	B1	6/2003	Swab et al.
6,619,799	B1	9/2003	Blum et al.
6,629,076	B1	9/2003	Haken
6,678,381	B1	1/2004	Manabe
6,717,737	B1	4/2004	Haglund
6,729,726	B2	5/2004	Miller et al.
6,736,759	B1	5/2004	Stubbs et al.
6,764,194	B1	7/2004	Cooper
6,769,767	B2	8/2004	Swab et al.
6,771,294	B1	8/2004	Pulli et al.
6,771,423	B2	8/2004	Geist
6,788,309	B1	9/2004	Swan et al.
6,792,401	B1	9/2004	Nigro et al.
6,816,314	B2	11/2004	Shimizu et al.
6,824,265	B1	11/2004	Harper
6,847,336	B1	1/2005	Lemelson et al.
6,857,741	B2	2/2005	Blum et al.
6,871,951	B2	3/2005	Blum et al.
6,879,930	B2	4/2005	Sinclair et al.
6,912,386	B1	6/2005	Himberg et al.
6,929,365	B2	8/2005	Swab et al.
6,932,090	B1	8/2005	Reschke et al.
6,943,754	B2	9/2005	Aughey et al.
6,947,219	B1	9/2005	Ou
6,977,776	B2	12/2005	Volkenandt et al.
7,004,582	B2	2/2006	Jannard et al.
7,013,009	B2	3/2006	Warren
7,023,594	B2	4/2006	Blum et al.
7,030,902	B2	4/2006	Jacobs
7,031,667	B2	4/2006	Horiguchi
7,033,025	B2	4/2006	Winterbotham
7,059,717	B2	6/2006	Bloch
7,073,905	B2	7/2006	Da Pra'
7,079,876	B2	7/2006	Levy
7,123,215	B2	10/2006	Nakada
7,148,489	B2	12/2006	Yagi
7,150,526	B2	12/2006	Jannard et al.
7,192,136	B2	3/2007	Howell et al.
7,255,437	B2	8/2007	Howell et al.
7,265,358	B2	9/2007	Fontaine
7,274,292	B2	9/2007	Velhal et al.
7,278,734	B2	10/2007	Jannard et al.
7,289,767	B2	10/2007	Lai
7,312,699	B2	12/2007	Chornenky
7,331,666	B2	2/2008	Swab et al.
7,347,551	B2	3/2008	Fergason et al.
7,376,238	B1	5/2008	Rivas et al.
7,380,936	B2	6/2008	Howell et al.
7,401,918	B2	7/2008	Howell et al.
7,405,801	B2	7/2008	Jacobs
7,429,965	B2	9/2008	Weiner
7,430,299	B2	9/2008	Armstrong et al.
7,438,409	B2	10/2008	Jordan
7,438,410	B1	10/2008	Howell et al.
7,445,332	B2	11/2008	Jannard et al.
7,481,531	B2	1/2009	Howell et al.
7,488,294	B2	2/2009	Torch
7,500,746	B1	3/2009	Howell et al.
7,500,747	B2	3/2009	Howell et al.
7,512,414	B2	3/2009	Jannard et al.
7,517,083	B2	4/2009	Blum et al.
7,527,374	B2	5/2009	Chou
7,543,934	B2	6/2009	Howell et al.
7,581,833	B2	9/2009	Howell et al.

(56) **References Cited**

U.S. PATENT DOCUMENTS

7,621,634	B2	11/2009	Howell et al.
7,648,236	B1	1/2010	Dobson
7,651,220	B1	1/2010	Pattikonda
7,677,723	B2	3/2010	Howell et al.
7,760,898	B2	7/2010	Howell et al.
7,771,046	B2	8/2010	Howell et al.
7,787,647	B2	8/2010	Hagen et al.
7,792,552	B2	9/2010	Thomas et al.
7,801,570	B2	9/2010	Cheung et al.
7,806,525	B2	10/2010	Howell et al.
7,922,321	B2	4/2011	Howell et al.
7,976,159	B2	7/2011	Jacobs et al.
8,009,849	B2	8/2011	Enzmann
8,109,629	B2	2/2012	Howell et al.
8,142,015	B2	3/2012	Paolino
8,174,569	B2	5/2012	Tanijiri et al.
8,175,886	B2	5/2012	Odinak
8,251,875	B2	8/2012	Ellis et al.
8,337,013	B2	12/2012	Howell et al.
8,408,699	B2	4/2013	Blum et al.
8,430,507	B2	4/2013	Howell et al.
8,434,863	B2	5/2013	Howell et al.
8,465,151	B2	6/2013	Howell et al.
8,485,661	B2	7/2013	Yoo et al.
8,500,271	B2	8/2013	Howell et al.
8,571,241	B2	10/2013	Larsen
8,582,789	B2	11/2013	Cheung et al.
8,620,208	B2	12/2013	Slotznick
8,626,246	B2	1/2014	Shostak
8,770,742	B2	7/2014	Howell et al.
8,849,185	B2	9/2014	Cheung et al.
8,905,542	B2	12/2014	Howell et al.
8,931,896	B2	1/2015	Blum et al.
9,033,493	B2	5/2015	Howell et al.
9,183,351	B2	11/2015	Shusterman
9,244,292	B2	1/2016	Swab et al.
9,369,814	B2	6/2016	Victorian et al.
9,400,390	B2	7/2016	Osterhout et al.
9,405,135	B2	8/2016	Sweis et al.
9,488,520	B2	11/2016	Howell et al.
9,547,184	B2	1/2017	Howell et al.
9,690,121	B2	6/2017	Howell et al.
9,922,236	B2	3/2018	Moore et al.
10,042,186	B2	8/2018	Chao et al.
10,060,790	B2	8/2018	Howell et al.
10,061,144	B2	8/2018	Howell et al.
10,310,296	B2	6/2019	Howell et al.
10,345,625	B2	7/2019	Howell et al.
10,359,311	B2	7/2019	Howell et al.
10,515,623	B1	12/2019	Grizzel
10,539,459	B2	1/2020	Howell et al.
10,571,715	B2	2/2020	Rizzo, III et al.
10,624,790	B2	4/2020	Chao et al.
10,777,048	B2	9/2020	Howell et al.
10,802,582	B1	10/2020	Clements
10,964,190	B2	3/2021	Peyrard
11,042,045	B2	6/2021	Chao et al.
11,069,358	B1	7/2021	Harper
11,086,147	B2	8/2021	Howell et al.
11,204,512	B2	12/2021	Howell et al.
11,243,416	B2	2/2022	Howell et al.
11,326,941	B2	5/2022	Howell et al.
11,480,802	B1	10/2022	Tombelli
11,513,371	B2	11/2022	Howell et al.
11,536,988	B2	12/2022	Howell et al.
11,630,331	B2	4/2023	Howell et al.
11,644,361	B2	5/2023	Howell et al.
11,644,693	B2	5/2023	Howell et al.
11,721,183	B2	8/2023	Howell et al.
11,733,549	B2	8/2023	Howell et al.
11,762,224	B2	9/2023	Howell et al.
11,803,069	B2	10/2023	Howell et al.
11,829,518	B1	11/2023	Howell et al.
2001/0005230	A1	6/2001	Ishikawa
2001/0028309	A1	10/2001	Torch
2001/0050754	A1	12/2001	Hay et al.
2002/0017997	A1	2/2002	Felkowitz
2002/0021407	A1	2/2002	Elliott
2002/0081982	A1	6/2002	Schwartz et al.
2002/0084990	A1	7/2002	Peterson, III
2002/0089639	A1	7/2002	Starner et al.
2002/0090103	A1	7/2002	Calisto, Jr.
2002/0098877	A1	7/2002	Glezerman
2002/0101568	A1	8/2002	Eberl et al.
2002/0109600	A1	8/2002	Mault et al.
2002/0136414	A1	9/2002	Jordan et al.
2002/0140899	A1	10/2002	Blum et al.
2002/0146097	A1	10/2002	Vuori
2002/0159023	A1	10/2002	Swab
2002/0197961	A1	12/2002	Warren
2003/0018274	A1	1/2003	Takahashi et al.
2003/0022690	A1	1/2003	Beyda et al.
2003/0030597	A1	2/2003	Geist
2003/0032449	A1	2/2003	Giobbi
2003/0045283	A1	3/2003	Hagedoorn
2003/0062046	A1	4/2003	Wiesmann et al.
2003/0063763	A1	4/2003	Allred et al.
2003/0064746	A1	4/2003	Rader et al.
2003/0065257	A1	4/2003	Mault et al.
2003/0067585	A1	4/2003	Miller et al.
2003/0068057	A1	4/2003	Miller et al.
2003/0083591	A1	5/2003	Edwards et al.
2003/0091200	A1	5/2003	Pompei
2003/0214630	A1	11/2003	Winterbotham
2003/0226978	A1	12/2003	Ribi et al.
2003/0231293	A1	12/2003	Blum et al.
2004/0000733	A1	1/2004	Swab et al.
2004/0005069	A1	1/2004	Buck
2004/0029582	A1	2/2004	Swab et al.
2004/0059212	A1	3/2004	Abreu
2004/0063378	A1	4/2004	Nelson
2004/0096078	A1	5/2004	Lin
2004/0100384	A1	5/2004	Chen et al.
2004/0101178	A1	5/2004	Fedorovskaya et al.
2004/0104864	A1	6/2004	Nakada
2004/0114770	A1	6/2004	Pompei
2004/0128737	A1	7/2004	Gesten
2004/0150986	A1	8/2004	Chang
2004/0156012	A1	8/2004	Jannard et al.
2004/0157649	A1	8/2004	Jannard et al.
2004/0160571	A1	8/2004	Jannard
2004/0160572	A1	8/2004	Jannard
2004/0160573	A1	8/2004	Jannard et al.
2004/0197002	A1	10/2004	Atsumi et al.
2004/0227219	A1	11/2004	Su
2005/0036103	A1	2/2005	Bloch
2005/0067580	A1	3/2005	Fontaine
2005/0078274	A1	4/2005	Howell et al.
2005/0088365	A1	4/2005	Yamazaki et al.
2005/0090295	A1	4/2005	Ali et al.
2005/0201585	A1	9/2005	Jannard et al.
2005/0213026	A1	9/2005	Da Pra'
2005/0230596	A1	10/2005	Howell et al.
2005/0238194	A1	10/2005	Chornenky
2005/0239502	A1	10/2005	Swab et al.
2005/0248717	A1	11/2005	Howell et al.
2005/0248718	A1	11/2005	Howell et al.
2005/0248719	A1	11/2005	Howell et al.
2005/0264752	A1	12/2005	Howell et al.
2005/0278446	A1	12/2005	Bryant
2005/0281440	A1	12/2005	Pemer
2006/0001827	A1	1/2006	Howell et al.
2006/0003803	A1	1/2006	Thomas et al.
2006/0023158	A1	2/2006	Howell et al.
2006/0034478	A1	2/2006	Davenport
2006/0107822	A1	5/2006	Bowen
2006/0132382	A1	6/2006	Jannard
2006/0203183	A1	9/2006	Jannard et al.
2006/0291667	A1	12/2006	Watanabe et al.
2007/0030442	A1	2/2007	Howell et al.
2007/0035830	A1	2/2007	Matveev et al.
2007/0046887	A1	3/2007	Howell et al.
2007/0055888	A1	3/2007	Miller et al.
2007/0098192	A1	5/2007	Sipkema

(56) **References Cited**

U.S. PATENT DOCUMENTS

2007/0109491	A1	5/2007	Howell et al.
2007/0182812	A1	8/2007	Ritchey
2007/0186330	A1	8/2007	Howell et al.
2007/0189548	A1	8/2007	Croft, III
2007/0200927	A1	8/2007	Krenik
2007/0208531	A1	9/2007	Darley et al.
2007/0211574	A1	9/2007	Croft, III
2007/0248238	A1	10/2007	Abreu et al.
2007/0270663	A1	11/2007	Ng et al.
2007/0271065	A1	11/2007	Gupta et al.
2007/0271116	A1	11/2007	Wysocki et al.
2007/0271387	A1	11/2007	Lydon et al.
2007/0279584	A1	12/2007	Howell et al.
2008/0024594	A1	1/2008	Ritchey
2008/0062338	A1	3/2008	Herzog et al.
2008/0068559	A1	3/2008	Howell et al.
2008/0089545	A1	4/2008	Jannard et al.
2008/0100792	A1	5/2008	Blum et al.
2008/0144854	A1	6/2008	Abreu
2008/0151175	A1	6/2008	Gross
2008/0151179	A1	6/2008	Howell et al.
2008/0158506	A1	7/2008	Fuziak
2008/0211921	A1	9/2008	Sako et al.
2008/0218684	A1	9/2008	Howell et al.
2008/0262392	A1	10/2008	Ananny et al.
2008/0278678	A1	11/2008	Howell et al.
2009/0059159	A1	3/2009	Howell et al.
2009/0059381	A1	3/2009	Jannard
2009/0073375	A1	3/2009	Nakada
2009/0141233	A1	6/2009	Howell et al.
2009/0147215	A1	6/2009	Howell et al.
2009/0156128	A1	6/2009	Franson et al.
2009/0251660	A1	10/2009	Figler et al.
2009/0251661	A1	10/2009	Fuziak, Jr.
2009/0296044	A1	12/2009	Howell et al.
2010/0045928	A1	2/2010	Levy
2010/0061579	A1	3/2010	Rickards et al.
2010/0079356	A1	4/2010	Hoellwarth
2010/0105445	A1	4/2010	Brunton et al.
2010/0110368	A1	5/2010	Chaum
2010/0245754	A1	9/2010	Matsumoto et al.
2010/0296045	A1	11/2010	Agnoli et al.
2010/0309426	A1	12/2010	Howell et al.
2011/0102734	A1	5/2011	Howell et al.
2011/0164122	A1	7/2011	Hardacker
2011/0187990	A1	8/2011	Howell et al.
2011/0241976	A1	10/2011	Boger et al.
2011/0273365	A1	11/2011	West et al.
2011/0292333	A1	12/2011	Kozaki et al.
2012/0033061	A1	2/2012	Ko et al.
2012/0050668	A1	3/2012	Howell et al.
2012/0062357	A1	3/2012	Slamka
2012/0101411	A1	4/2012	Hausdorff et al.
2012/0133885	A1	5/2012	Howell et al.
2012/0176580	A1	7/2012	Sonsino
2012/0283894	A1	11/2012	Naboulsi
2013/0072828	A1	3/2013	Sweis et al.
2013/0077175	A1	3/2013	Hotta et al.
2013/0143519	A1	6/2013	Doezema
2013/0172691	A1	7/2013	Tran
2013/0201440	A1	8/2013	Howell et al.
2013/0308089	A1	11/2013	Howell et al.
2014/0132913	A1	5/2014	Sweis et al.
2014/0176902	A1	6/2014	Sweis et al.
2014/0198293	A1	7/2014	Sweis et al.
2014/0226838	A1	8/2014	Wingate et al.
2014/0268008	A1	9/2014	Howell et al.
2014/0268013	A1	9/2014	Howell et al.
2014/0268017	A1	9/2014	Sweis et al.
2014/0361185	A1	12/2014	Howell et al.
2015/0085245	A1	3/2015	Howell et al.
2015/0230988	A1	8/2015	Chao et al.
2015/0253590	A1	9/2015	Howell et al.
2015/0277123	A1	10/2015	Chaum et al.
2015/0338677	A1	11/2015	Block
2016/0098874	A1	4/2016	Handville et al.
2016/0246075	A9	8/2016	Howell et al.
2016/0302992	A1	10/2016	Sweis et al.
2017/0068117	A9	3/2017	Howell et al.
2017/0074721	A1	3/2017	Howell et al.
2017/0090219	A1	3/2017	Howell et al.
2017/0131575	A1	5/2017	Howell et al.
2017/0146829	A1	5/2017	Howell et al.
2017/0289323	A1	10/2017	Gelvin et al.
2017/0303187	A1	10/2017	Crouthamel et al.
2018/0122208	A1	5/2018	Peyrard
2018/0314079	A1	11/2018	Chao et al.
2018/0335650	A1	11/2018	Howell et al.
2018/0348050	A1	12/2018	Howell et al.
2019/0004325	A1	1/2019	Connor
2019/0033622	A1	1/2019	Olgun et al.
2019/0033623	A1	1/2019	Howell et al.
2019/0117121	A1	4/2019	Kutina et al.
2019/0187492	A1	6/2019	Howell et al.
2019/0272800	A1	9/2019	Tao et al.
2019/0278110	A1	9/2019	Howell et al.
2019/0285913	A1	9/2019	Howell et al.
2019/0310132	A1	10/2019	Howell et al.
2019/0318589	A1	10/2019	Howell et al.
2019/0369402	A1	12/2019	Woodman et al.
2019/0378493	A1	12/2019	Kim et al.
2019/0387351	A1	12/2019	Lyren et al.
2020/0012127	A1	1/2020	Howell et al.
2020/0218094	A1	7/2020	Howell et al.
2020/0363835	A1	11/2020	Blum et al.
2020/0364992	A1	11/2020	Howell et al.
2021/0000347	A1	1/2021	Stump
2021/0026146	A1	1/2021	Harder et al.
2021/0271116	A1	9/2021	Chao et al.
2021/0364827	A9	11/2021	Howell et al.
2021/0364828	A1	11/2021	Howell et al.
2021/0379425	A1	12/2021	Tran
2021/0399691	A1	12/2021	Saminathan et al.
2022/0008763	A1	1/2022	Saleh et al.
2022/0011603	A1	1/2022	Howell et al.
2022/0034542	A1	2/2022	Peters et al.
2022/0054092	A1	2/2022	Howell et al.
2022/0178743	A1	6/2022	Howell et al.
2022/0260859	A1	8/2022	Howell et al.
2022/0335792	A1	10/2022	Howell et al.
2022/0357599	A1	11/2022	Howell et al.
2022/0415338	A1	12/2022	Howell et al.
2023/0017635	A1	1/2023	Howell et al.
2023/0033660	A1	2/2023	Howell et al.
2023/0057654	A1	2/2023	Howell et al.
2023/0236444	A1	7/2023	Howell et al.
2023/0273464	A1	8/2023	Howell et al.
2023/0359266	A1	11/2023	Howell et al.

FOREIGN PATENT DOCUMENTS

CA	2362895	A1	12/2002
CA	2 487 391		12/2003
CA	2388766	A1	12/2003
CA	2435873	C	3/2004
CN	88203065		11/1988
CN	89214222.7		3/1990
CN	90208199.3		11/1990
DE	10123226	A1	11/2002
EP	0441791	B1	8/1991
EP	1134491	A2	9/2001
EP	1027626	B1	3/2016
EP	2290433	B1	4/2016
FR	2530039	A1	1/1984
GB	1467982		3/1977
JP	58-113912		7/1983
JP	58-113914		7/1983
JP	63-153218		10/1988
JP	H02-159272	A	6/1990
JP	02-181722		7/1990
JP	H02-102521	U	8/1990
JP	09-017204		1/1997
JP	10-161072		6/1998
JP	2000-039595		2/2000

(56) **References Cited**

FOREIGN PATENT DOCUMENTS

JP	2002 02511706	A	4/2002
JP	2002 341059	A	11/2002
JP	2005-151292		6/2005
JP	2005-167902		6/2005
JP	6275987		2/2018
KR	2002-0044416	A	6/2002
TW	484711		6/2001
WO	WO 97/12205	A1	4/1997
WO	WO 99/50706	A1	10/1999
WO	WO 01/06298	A1	1/2001
WO	WO 01/24576	A1	4/2001
WO	WO 01/84095	A1	11/2001
WO	WO 02/06881	A2	1/2002
WO	WO 02/086599	A1	10/2002
WO	WO 03/062906	A1	7/2003
WO	WO 03/069394	A1	8/2003
WO	WO 03/100368	A1	12/2003
WO	WO 03/100503	A2	12/2003
WO	WO 04/001373	A2	12/2003
WO	WO 04/012477	A2	2/2004
WO	WO 04/025554	A1	3/2004
WO	WO 05/036110	A1	4/2005

OTHER PUBLICATIONS

Office Action for U.S. Appl. No. 18/144,557, dated Aug. 23, 2023.
Office Action for U.S. Appl. No. 18/144,557, dated Nov. 24, 2023.
Notice of Allowance for U.S. Appl. No. 18/238,467, dated Nov. 21, 2023.
Notice of Allowance for U.S. Appl. No. 16/182,969, dated Oct. 25, 2023.
Notice of Allowance for U.S. Appl. No. 11/183,269, dated Dec. 10, 2010.
Office Action for U.S. Appl. No. 11/183,269, dated May 25, 2010.
Final Office Action for U.S. Appl. No. 11/183,269, dated Feb. 17, 2010.
Office Action for U.S. Appl. No. 11/183,269, dated Jun. 23, 2009.
Office Action for U.S. Appl. No. 11/183,269, dated Dec. 4, 2008.
Final Office Action for U.S. Appl. No. 11/183,269, dated Jun. 5, 2008.
Office Action for U.S. Appl. No. 11/183,269, dated Oct. 18, 2007.
Restriction Requirement for U.S. Appl. No. 11/183,269, dated Jun. 25, 2007.
Office Action for U.S. Appl. No. 13/085,402, dated Apr. 19, 2012.
Notice of Allowance for U.S. Appl. No. 13/085,402, dated Aug. 2, 2012.
Notice of Allowance for U.S. Appl. No. 13/085,402, dated Nov. 13, 2012.
Notice of Allowance for U.S. Appl. No. 13/085,402, dated Feb. 20, 2013.
Notice of Allowance for U.S. Appl. No. 13/085,402, dated Jun. 14, 2013.
Office Action for U.S. Appl. No. 13/955,336, dated Dec. 5, 2013.
Notice of Allowance for U.S. Appl. No. 13/955,336, dated Apr. 28, 2014.
Notice of Allowance for U.S. Appl. No. 13/955,336, dated Aug. 18, 2014.
Notice of Allowance for U.S. Appl. No. 13/955,336, dated Oct. 7, 2014.
Notice of Allowance for U.S. Appl. No. 13/955,336, dated Nov. 3, 2014.
Office Action for U.S. Appl. No. 14/557,409, dated Jun. 11, 2015.
Notice of Allowance for U.S. Appl. No. 14/557,409, dated Jan. 14, 2016.
Notice of Allowance for U.S. Appl. No. 14/557,409, dated Apr. 28, 2016.
Notice of Allowance for U.S. Appl. No. 14/557,409, dated Aug. 8, 2016.
Notice of Allowance for U.S. Appl. No. 14/557,409, dated Nov. 4, 2016.
Corrected Notice of Allowance for U.S. Appl. No. 14/557,409, dated Dec. 12, 2016.
Office Action for U.S. Appl. No. 15/375,423, dated Mar. 27, 2017.
Notice of Allowance for U.S. Appl. No. 15/375,423, dated Jul. 5, 2017.
Notice of Allowance for U.S. Appl. No. 15/375,423, dated Oct. 31, 2017.
Notice of Allowance for U.S. Appl. No. 15/375,423, dated Mar. 23, 2018.
Notice of Allowance for U.S. Appl. No. 15/375,423, dated Jul. 13, 2018.
Office Action for U.S. Appl. No. 16/049,120, dated Feb. 28, 2020.
Notice of Allowance for U.S. Appl. No. 16/049,120, dated Jun. 3, 2020.
Notice of Allowance for U.S. Appl. No. 16/049,120, dated Sep. 21, 2020.
Notice of Allowance for U.S. Appl. No. 16/049,120, dated Feb. 23, 2021.
Notice of Allowance for U.S. Appl. No. 16/049,120, dated Jun. 3, 2021.
Notice of Allowance for U.S. Appl. No. 16/049,120, dated Sep. 20, 2021.
Notice of Allowance for U.S. Appl. No. 16/574,254, dated Apr. 16, 2021.
Notice of Allowance for U.S. Appl. No. 16/574,254, dated Aug. 9, 2021.
Office Action for U.S. Appl. No. 16/821,810, dated Feb. 2, 2022.
Notice of Allowance for U.S. Appl. No. 16/821,810, dated Apr. 6, 2022.
Notice of Allowance for U.S. Appl. No. 16/821,810, dated Oct. 19, 2022.
Office Action for U.S. Appl. No. 17/484,080, dated Jan. 21, 2022.
Notice of Allowance for U.S. Appl. No. 17/484,080, dated May 31, 2022.
Notice of Allowance for U.S. Appl. No. 17/484,080, dated Sep. 13, 2022.
Notice of Allowance for U.S. Appl. No. 17/484,080, dated Jan. 31, 2023.
Notice of Allowance for U.S. Appl. No. 17/484,080, dated Jun. 1, 2023.
Office Action for U.S. Appl. No. 17/949,029, dated Nov. 23, 2022.
Notice of Allowance for U.S. Appl. No. 17/949,029, dated Mar. 1, 2023.
Notice of Allowance for U.S. Appl. No. 17/949,029, dated Jul. 3, 2023.
Office Action for U.S. Appl. No. 17/873,104, dated Oct. 6, 2022.
Office Action for U.S. Appl. No. 17/873,104, dated Nov. 4, 2022.
Notice of Allowance for U.S. Appl. No. 17/873,104, dated Dec. 16, 2022.
Notice of Allowance for U.S. Appl. No. 17/873,104, dated Mar. 22, 2023.
Restriction Requirement for U.S. Appl. No. 11/580,222, dated Jun. 18, 2008.
Office Action for U.S. Appl. No. 11/580,222, dated Sep. 12, 2008.
Office Action for U.S. Appl. No. 11/580,222, dated Jan. 28, 2009.
Notice of Allowance for U.S. Appl. No. 11/580,222, dated Apr. 20, 2009.
U.S. Appl. No. 12/462,286, filed Jul. 31, 2009.
Restriction Requirement for U.S. Appl. No. 12/462,286, dated Sep. 17, 2010.
Office Action for U.S. Appl. No. 12/462,286, dated Jan. 13, 2011.
Notice of Allowance for U.S. Appl. No. 12/462,286, dated Jun. 24, 2011.
Notice of Allowance for U.S. Appl. No. 12/462,286, dated Nov. 22, 2011.
Office Action for U.S. Appl. No. 13/367,346, dated May 15, 2013.
Notice of Allowance for U.S. Appl. No. 13/367,346, dated Oct. 10, 2013.
Office Action for U.S. Appl. No. 13/367,346, dated Jan. 28, 2014.
Notice of Allowance for U.S. Appl. No. 13/367,346, dated Aug. 15, 2014.
Notice of Allowance for U.S. Appl. No. 13/367,346, dated Mar. 19, 2015.

(56) **References Cited**

OTHER PUBLICATIONS

Office Action ffor U.S. Appl. No. 14/715,501, dated Sep. 23, 2015.
Office Action for U.S. Appl. No. 14/715,501, dated Mar. 25, 2016.
Office Action for U.S. Appl. No. 14/715,501, dated Oct. 17, 2016.
Office Action for U.S. Appl. No. 14/715,501, dated Jul. 20, 2017.
Office Action for U.S. Appl. No. 14/715,501, dated Jan. 8, 2018.
Notice of Allowance for U.S. Appl. No. 14/715,501, dated May 9, 2018.
Notice of Allowance for U.S. Appl. No. 14/715,501, dated Sep. 11, 2018.
Office Action for U.S. Appl. No. 16/127,957, dated Jun. 4, 2020.
Office Action for U.S. Appl. No. 16/127,957, dated Sep. 30, 2020.
Notice of Allowance for U.S. Appl. No. 16/127,957, dated Dec. 21, 2020.
Notice of Allowance for U.S. Appl. No. 17/395,509, dated May 6, 2022.
Notice of Allowance for U.S. Appl. No. 17/395,509, dated Sep. 9, 2022.
Notice of Allowance for U.S. Appl. No. 17/395,509, dated Dec. 19, 2022.
Notice of Allowance for U.S. Appl. No. 17/395,509, dated Apr. 26, 2023.
Notice of Allowance for U.S. Appl. No. 17/737,866, dated Sep. 16, 2022.
Notice of Allowance for U.S. Appl. No. 17/737,866, dated Jan. 17, 2023.
Notice of Allowance for U.S. Appl. No. 17/737,866, dated May 15, 2023.
Notice of Allowance for U.S. Appl. No. 16/182,969, dated Jan. 28, 2022.
Office Action for U.S. Appl. No. 16/182,969, dated Jun. 24, 2020.
Notice of Allowance for U.S. Appl. No. 16/182,969, dated Oct. 14, 2020.
Notice of Allowance for U.S. Appl. No. 16/182,969, dated Sep. 1, 2021.
Office Action for U.S. Appl. No. 16/182,969, dated Jan. 24, 2023.
Notice of Allowance for U.S. Appl. No. 16/182,969, dated Jun. 30, 2023.
U.S. Appl. No. 12/806,312, filed Aug. 10, 2010.
Office Action for U.S. Appl. No. 12/806,312, dated Apr. 20, 2012.
Office Action for U.S. Appl. No. 12/806,312, dated Sep. 25, 2012.
Notice of Allowance for U.S. Appl. No. 12/806,312, dated Dec. 14, 2012.
Notice of Allowance for U.S. Appl. No. 12/806,312, dated Mar. 29, 2013.
U.S. Appl. No. 13/831,512, filed Mar. 14, 2013.
Office Action for U.S. Appl. No. 13/831,512, dated Jun. 4, 2013.
Office Action for U.S. Appl. No. 13/831,512, dated Feb. 24, 2014.
Office Action for U.S. Appl. No. 13/831,512, dated Jul. 2, 2014.
Office Action for U.S. Appl. No. 13/831,512, dated Jan. 21, 2015.
Office Action for U.S. Appl. No. 13/831,512, dated May 29, 2015.
Office Action for U.S. Appl. No. 13/831,512, dated Feb. 24, 2016.
Notice of Allowance for U.S. Appl. No. 13/831,512, dated Aug. 1, 2016.
Notice of Allowance for U.S. Appl. No. 13/831,512, dated Oct. 25, 2016.
Notice of Allowance for U.S. Appl. No. 13/831,512, dated Jan. 30, 2017.
Notice of Allowance for U.S. Appl. No. 13/831,512, dated Feb. 21, 2017.
Office Action for U.S. Appl. No. 15/396,428, dated Feb. 16, 2018.
Office Action for U.S. Appl. No. 15/396,428, dated Jun. 21, 2018.
Office Action for U.S. Appl. No. 15/409,723, dated Apr. 23, 2018.
Office Action for U.S. Appl. No. 15/409,723, dated Oct. 31, 2018.
Notice of Allowance for U.S. Appl. No. 11/183,256, dated Jan. 13, 2009.
Office Action for U.S. Appl. No. 11/183,256, dated Sep. 12, 2008.
Notice of Allowance for U.S. Appl. No. 11/183,256, dated Jul. 8, 2008.
Office Action for U.S. Appl. No. 11/183,256, dated Jan. 25, 2008.
Restriction Requirement for U.S. Appl. No. 11/183,256, dated Oct. 17, 2007.
Restriction Requirement for U.S. Appl. No. 11/183,256, dated Jun. 28, 2007.
Notice of Allowance for U.S. Appl. No. 11/546,685, dated Feb. 17, 2010.
Notice of Allowance for U.S. Appl. No. 11/546,685, dated Sep. 18, 2009.
Office Action for U.S. Appl. No. 11/546,685, dated Mar. 5, 2009.
Restriction Requirement for U.S. Appl. No. 11/546,685, dated Jan. 27, 2009.
U.S. Appl. No. 12/803,732, filed Jul. 1, 2010.
Notice of Allowance for U.S. Appl. No. 12/803,732, dated Sep. 1, 2011.
Notice of Allowance for U.S. Appl. No. 12/803,732, dated Nov. 15, 2011.
Notice of Allowance for U.S. Appl. No. 12/803,732, dated Jan. 30, 2012.
Notice of Allowance for U.S. Appl. No. 12/803,732, dated Apr. 17, 2012.
Notice of Allowance for U.S. Appl. No. 12/803,732, dated Jul. 5, 2012.
Notice of Allowance for U.S. Appl. No. 12/803,732, dated Oct. 19, 2012.
Notice of Allowance for U.S. Appl. No. 12/803,732, dated Feb. 13, 2013.
Office Action for U.S. Appl. No. 13/291,020, dated Jun. 4, 2012.
Office Action for U.S. Appl. No. 13/291,020, dated Apr. 23, 2012.
Notice of Allowance for U.S. Appl. No. 13/291,020, dated Aug. 2, 2012.
Notice of Allowance for U.S. Appl. No. 13/291,020, dated Nov. 2, 2012.
Notice of Allowance for U.S. Appl. No. 13/291,020, dated Feb. 11, 2013.
U.S. Appl. No. 13/831,419, filed Mar. 14, 2013.
Office Action for U.S. Appl. No. 13/831,419, dated Apr. 27, 2015.
Office Action for U.S. Appl. No. 13/831,419, dated Aug. 12, 2015.
Notice of Allowance for U.S. Appl. No. 13/831,419, dated Jan. 28, 2016.
Office Action for U.S. Appl. No. 13/831,419, dated Apr. 28, 2016.
Office Action for U.S. Appl. No. 13/831,419, dated Nov. 17, 2016.
Office Action for U.S. Appl. No. 13/831,419, dated Feb. 1, 2017.
Notice of Allowance for U.S. Appl. No. 13/831,419, dated Jun. 6, 2017.
Office Action for U.S. Appl. No. 13/831,419, dated Oct. 20, 2017.
Office Action for U.S. Appl. No. 13/831,419, dated Jun. 8, 2018.
U.S. Appl. No. 13/831,445, filed Mar. 14, 2013.
Office Action for U.S. Appl. No. 13/831,445, dated Feb. 20, 2015.
Notice of Allowance for U.S. Appl. No. 13/831,445, dated Oct. 21, 2016.
Notice of Allowance for U.S. Appl. No. 13/831,445, dated Jan. 9, 2017.
Corrected Notice of Allowance for U.S. Appl. No. 13/831,445, dated Jan. 23, 2017.
Notice of Allowance for U.S. Appl. No. 13/831,445, dated Apr. 25, 2017.
Office Action for U.S. Appl. No. 13/831,445, dated Feb. 6, 2018.
Notice of Allowance for U.S. Appl. No. 13/831,445, dated Aug. 8, 2018.
Office Action for U.S. Appl. No. 16/429,181, dated Sep. 30, 2020.
Notice of Allowance for U.S. Appl. No. 16/429,181, dated Feb. 1, 2021.
Notice of Allowance for U.S. Appl. No. 16/429,181, dated Jun. 17, 2021.
Notice of Allowance for U.S. Appl. No. 16/429,181, dated Aug. 19, 2021.
Notice of Allowance for U.S. Appl. No. 16/429,181, dated Oct. 4, 2021.
Office Action for U.S. Appl. No. 16/429,181, dated Feb. 9, 2022.
Notice of Allowance for U.S. Appl. No. 16/429,181, dated Aug. 10, 2022.
Office Action for U.S. Appl. No. 16/424,018, dated Jun. 10, 2020.

(56) **References Cited**

OTHER PUBLICATIONS

Notice of Allowance for U.S. Appl. No. 16/424,018, dated Oct. 20, 2020.
Notice of Allowance for U.S. Appl. No. 16/424,018, dated Mar. 8, 2021.
Office Action for U.S. Appl. No. 16/424,018, dated May 13, 2021.
Office Action for U.S. Appl. No. 16/424,018, dated Sep. 3, 2021.
Notice of Allowance for U.S. Appl. No. 16/424,018, dated Nov. 2, 2021.
Office Action for U.S. Appl. No. 16/424,018, dated Jan. 24, 2022.
Notice of Allowance for U.S. Appl. No. 16/424,018, dated Jun. 10, 2022.
Office Action for U.S. Appl. No. 16/424,018, dated Sep. 6, 2022.
Office Action for U.S. Appl. No. 16/424,018, dated Nov. 25, 2022.
Notice of Allowance for U.S. Appl. No. 16/424,018, dated Feb. 21, 2023.
Notice of Allowance for U.S. Appl. No. 17/942,347, dated Apr. 19, 2023.
Notice of Allowance for U.S. Appl. No. 17/942,347, dated Jul. 3, 2023.
Notice of Allowance for U.S. Appl. No. 17/942,347, dated Aug. 14, 2023.
Notice of Allowance for U.S. Appl. No. 17/964,853, dated Mar. 8, 2023.
Office Action for U.S. Appl. No. 18/129,660, dated May 19, 2023.
Office Action for U.S. Appl. No. 18/129,660, dated Jul. 7, 2023.
"±1.5g Dual Axis Micromachined Accelerometer", Freescale Semiconductor, Inc., Motorola Semiconductor Technical Data, MMA6260Q, Jun. 2004, pp. 1-7.
"APA Announces Shipment of the SunUV™ Personal UV Monitor", Press Release, Nov. 7, 2003, pp. 1-3.
"Camera Specs Take Candid Snaps", BBC News, Sep. 18, 2003, pp. 1-3.
"Cardo Wireless Attaching Clips and Wearing Headset", Cardo Systems, Inc., http://www.cardowireless.com/clips.php, downloaded Nov. 27, 2004, pp. 1-3.
"Environmental Health Criteria 14: Ultraviolet Radiation", International Programme on Chemical Safety, World Health Organization Geneva, 1979 http://www.ichem.org., pp. 1-102.
"Exclusive Media Event Marks Debut of Oakley Thump: World's First Digital Audio Eyewear", Oakley Investor Relations, Press Release, Nov. 15, 2004, pp. 1-2.
"Eyetop", Product-Features, eyetop eyewear, eyetop belt worn, http://www.eyetop.net/products/eyetop/features.asp., downloaded Nov. 6, 2003, pp. 1-2.
"Heart Rate Monitors", http://www.healthgoods.com, downloaded Dec. 4, 2004.
"How is the UV Index Calculated", SunWise Program, U.S. Environmental Protection Agency, http://www.epa.gov/sunwise/uvcalc.html, downloaded Oct. 14, 2004, pp. 1-2.
"Industrial UV Measurements", APA Optics, Inc., http://www.apaoptics.com/uv/, downloaded Jul. 12, 2004, p. 1.
"Motorola and Oakley Introduce First Bluetooth Sunglasses-Cutting Edge RAZRWire Line Offers Consumers On-The-Go Connections", Motorola Mediacenter—Press Release, Feb. 14, 2005, pp. 1-2.
"Oakley Thump: Sunglasses Meet MP3 Player", with image, http://news.designtechnica.com/article4665.html, Jul. 13, 2004.
"Personal UV monitor," Optics.org, http://optics.org/articles/news/6/6/7/1 (downloaded Dec. 20, 2003), Jun. 9, 2000, pp. 1-2.
"SafeSun Personal Ultraviolet Light Meter", http://healthchecksystems.com/safesun.htm, downloaded Jul. 12, 2004, pp. 1-4.
"SafeSun Personal UV Meter", Introduction, Optix Tech Inc., http://www.safesun.com, downloaded Feb. 5, 2004, pp. 1-2.
SafeSun Personal UV Meter, features, Optix Tech Inc., http://www.safesun.com/features.html, downloaded May 1, 2004, pp. 1-2.
"Sharper Image—The FM Pedometer", e-Corporate Gifts.com, http://www.e-corporategifts.com/sr353.html, downloaded Jan. 22, 2005, pp. 1-2.
"Sun UV™ Personal UV Monitor", APA Optics, Inc., http://www.apaoptics.com/sunuv/uvfacts.html, downloaded Dec. 20, 2003, pp. 1-3.
"Ultraviolet Light and Sunglasses", Oberon's Frequently Asked Questions, http://www.oberoncompany.com/OBEnglish/FAQUV.html, downloaded Feb. 5, 2004, pp. 1-2.
"Ultraviolet Light Sensor", Barrett & Associates Engineering, http://www.barrettengineering.com/project_uvs.htm, downloaded Feb. 5, 2004, pp. 1-3.
"Ultraviolet Radiation (UVR)", Forum North, Ontario Ministry of Labour, http://www3.mb.sympatico.ca/~ericc/ULTRAVIOLET%20RADIATION.htm, downloaded Feb. 5, 2004, pp. 1-6.
"What Are Gripples?", Gripping Eyewear, Inc., http://www.grippingeyewear.com/whatare.html, downloaded Nov. 2, 2005.
"With Racing Heart", Skaloud et al., GPS World, Oct. 1, 2001, http://www.gpsworld.com/gpsworld/content/printContentPopup.jsp?id=1805, pp. 1-5.
Abrisa Product Information: Cold Mirrors, Abrisa, Jun. 2001, p. 1.
Abrisa Product Information: Commercial Hot Mirror, Abrisa, Jun. 2001, p. 1.
Alps Spectacle, Air Conduction Glass, Bone Conduction Glass, http://www.alps-inter.com/spec.htm, downloaded Dec. 10, 2003, pp. 1-2.
Altimeter and Compass Watches, http://store.yahoo.com/snowshack/altimeter-watches.html, downloaded May 3, 2004, pp. 1-2.
Bone Conduction Headgear HG16 Series, "Voiceducer," http://www.temco-j.co.jp/html/English/HG16.html, downloaded Dec. 10, 2003, pp. 1-3.
Carnoy, David, "The Ultimate MP3 Player for Athletes? Could be.", CNET Reviews, May 14, 2004, pp. 1-4.
Clifford, Michelle A., "Accelerometers Jump into the Consumer Goods Market", Sensors Online, http://www.sensorsmag.com, Aug. 2004.
Comfees.com, Adjustable Sports Band Style No. 1243, http://shop.store.yahoo.com/comfees/adsportbansty.html, downloaded Apr. 18, 2003, pp. 1-2.
Cool Last Minute Gift Ideas!, UltimateFatBurner Reviews and Articles, http://www.ultimatefatburner.com/gift-ideas.html, downloaded May 10, 2005, pp. 1-3.
Dickie et al. "Eye Contact Sensing Glasses for Attention-Sensitive Wearable Video Blogging," Human Media Lab, Queen's University, Kingston, ON K7L 3N6, Canada, est. Apr. 2004, pp. 1-2.
Dixen, Brian, "ear-catching", Supertesten, Mobil, Apr. 2003 (estimated), pp. 37-41.
Global Solar UV Index, A Practical Guide, World Health Organization, 2002, pp. 1-28.
Grobart, Sam, "Digit-Sizing Your Computer Data", News Article, Sep. 2004, p. 1.
Life Monitor V1.1, Rhusoft Technologies Inc., http://www.rhusoft.com/lifemonitor/, Mar. 1, 2003, pp. 1-6.
Manes, Stephen, "Xtreme Cam", Forbes Magazine, Sep. 5, 2005, p. 96.
Mio, Physical, http://www.gophysical.com/, downloaded Jan. 27, 2004, 5 pages.
Monitoring Athletes Performance—2002 Winter Olympic News from KSL, Jan. 23, 2002, http://2002.ksl.com/news-3885i, pp. 1-3.
NIWA, "UV Index Information", http://www.niwa.cri.nz/services/uvozone/uvi-info, downloaded Jul. 15, 2004, pp. 1-2.
NuVision 60GX Steroscopic Wireless Glasses, Product Information, NuVision by MacNaughton, c. 1997, MacNaughton, Inc., pp. 1-2.
Pärkkä, Juha, et al., "A Wireless Wellness Monitor for Personal Weight Management", VTT Information Technology, Tampere, Finland, Nov. 2000, p. 1.
Pedometer, Model HJ-112, Omron Instruction Manual, Omron Healthcare, Inc., 2003, pp. 1-27.
PNY Announces Executive Attaché USB 2.0 Flash Drive and Pen Series, Press Release, PNY Technologies, Las Vegas, Jan. 8, 2004, pp. 1-2.
PNY Technologies, "Executive Attaché" http://www.pny.com/products/flash/execattache.asp downloaded Nov. 16, 2005.

(56) **References Cited**

OTHER PUBLICATIONS

Polar WM41 and 42 weight management monitor, http://www.simplysports/polar/weight_management/wm41-42.htm, downloaded Jan. 28, 2004, pp. 1-3.
Questions Answers, Pedometer.com, http://www.pedometer.com, downloaded May 5, 2005.
Razrwire, copyright Motorola, Inc., Jul. 2005, 1 page.
SafeSun Personal UV Meter, Scientific Data, Optix Tech Inc., http://www.safesun.com/scientific.html, downloaded May 1, 2004, pp. 1-3.
SafeSun Sensor, User's Manual, Optix Tech Inc., Jun. 1998, 2 pages.
Safesun, Personal UV Meter, "Technical Specifications", Optix Tech Inc., http://www.safesun.com/technical.html, downloaded Jul. 12, 2004, pp. 1-2.
SafeSun, Personal UV Meter, Experiments, Optix Tech Inc., http://www.safesun.com/experiments.html, downloaded Feb. 5, 2004, pp. 1-2.
Shades of Fun, Blinking Light Glasses, http://www.shadesoffun.com/Nov/Novpgs-14.html, downloaded Jul. 9, 2005, pp. 1-4.
SportLine Fitness Pedometer—Model 360, UltimateFatBurner Superstore, http://www.ultimatefatburner-store.com/ac_004.html, downloaded May 10, 2005, pp. 1-2.
Steele, Bonnie G. et al., "Bodies in motion: Monitoring daily activity and exercise with motion sensors in people with chronic pulmonary disease", VA Research & Development, Journal of Rehabilitation Research & Development, vol. 40, No. 5, Sep./Oct. 2003, Supplement 2, pp. 45-58.
Stevens, Kathy, "Should I Use a Pedometer When I Walk?", Healtheon/WebMD, Apr. 14, 2000.
Sundgot, Jørgen "2nd-gen Motorola Bluetooth headset", InfoSync World, Mar. 1, 2003, http://www.infosync.no/news/2002/n/2841.html, pp. 1-2.
SunSensors, Segan Industries, Inc., http://www.segan-ind.com/sunsensor.htm, downloaded Feb. 5, 2004, pp. 1-3.
SunUV™, Personal UV Monitor User's Guide, APA Optics, Inc., 2003 pp. 1-52.
SunUV™, Personal UV Monitor, APA Optics, Inc., http://www.apaoptics.com/sunuv/models.html, downloaded Dec. 20, 2003.
Talking Pedometer, Sportline, Inc., Jun. 2001 (Possibly earlier), 1 page.
The unofficial ELSA 3D Revelator page, Dec. 30, 1999, pp. 1-15.
Top Silicon PIN Photodiode, PD93-21C, Technical Data Sheet, Everlight Electronics Co., Ltd., 2004, pp. 1-9.
UV Light Meter, UVA and UVB measurement, UV-340, Instruction Manual, Lutron, Jun. 2003 (estimated), pp. 1-5.
UV-Smart, UVA/B Monitor, Model EC-960-PW, Instruction Manual, Tanita Corporation of America, Inc., downloaded Nov. 16, 2001.
Vitaminder Personal Carb Counter, http://www.auravita.com/products/AURA/ORBU11420.asp. Downloaded Nov. 15, 2005, pp. 1-4.
Yamada et al. "Development of an eye-movement analyser possessing functions for wireless transmission and autocalibration," Med. Biol. Eng. Comput., No. 28, v.4, Jul. 28, 1990, http://link.springer.com/article/10.1007%2FBF02446149?LI=true, pp. 1-2.
Office Action for U.S. Appl. No. 17/964,853, dated Sep. 15, 2023.
Notice of Allowance for U.S. Appl. No. 18/129,660, dated Aug. 24, 2023.
Office Action for U.S. Appl. No. 18/224,793, dated Sep. 7, 2023.
Notice of Allowance for U.S. Appl. No. 18/224,793, dated Oct. 2, 2023.
U.S. Appl. No. 60/460,154, filed Apr. 3, 2003, to Jannard.
Respondent's Disclosure of Invalidity Contentions with Exhibits A1-A13, Exhibits B1-B5, and Exhibits C1-C6, International Trade Commission Investigation No. 337-TA-1383, filed Feb. 29, 2024, pp. 1-1516.
Höllerer, T. and Feiner, S., "Mobile augmented reality." *Telegeoinformatics: Location-based computing and services* 21 (2004), pp. 1-39.
Mann, Steve and S. Mann. *Intelligent image processing*. IEEE, 2002, 121 pgs. [Part 1 of 3].
Mann, Steve and S. Mann. *Intelligent image processing*. IEEE, 2002, 130 pgs. [Part 2 of 3].
Mann, Steve and S. Mann. *Intelligent image processing*. IEEE, 2002, 110 pgs. [Part 3 of 3].
Mann, S., & Fung, J. "VideoOrbits on Eye Tap devices for deliberately diminished reality or altering the visual perception of rigid planar patches of a real world scene." *Eye*, 3, pp. 1-8.
Milgram, Paul, and Fumio Kishino. "A taxonomy of mixed reality visual displays." *IEICE Transactions on Information and Systems* 77.12 (1994), pp. 1-15.
Devaul et al. MIThril Project Overview. https://www.media.mit.edu/wearables/mithril/overview.html, downloaded Mar. 2, 2022, pp. 1-5.
Rolland, Jannick P., and Hong Hua. "Head-mounted display systems." *Encyclopedia of optical engineering* 2 (2005), pp. 1-14.
Rolland, Jannick P., et al. "High-resolution inset head-mounted display." *Applied optics* 37.19 (1998), pp. 1-11.
Yoshida, Akitoshi, Jannick P. Rolland, and John H. Reif. "Design and Applications of a High Resolution Insert Head Mounted Display." (1994), pp. 1-13.
Nortel 922, Mobile Phone Museum . . . pp. 1-3.

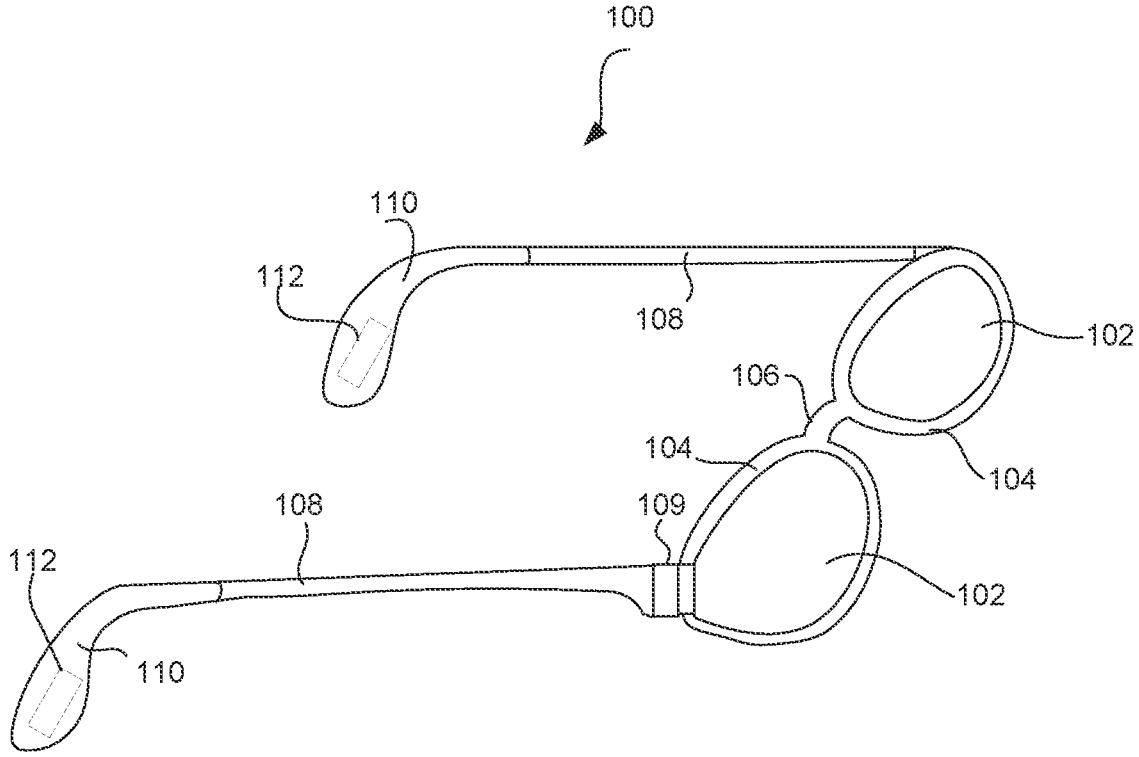

FIG. 1

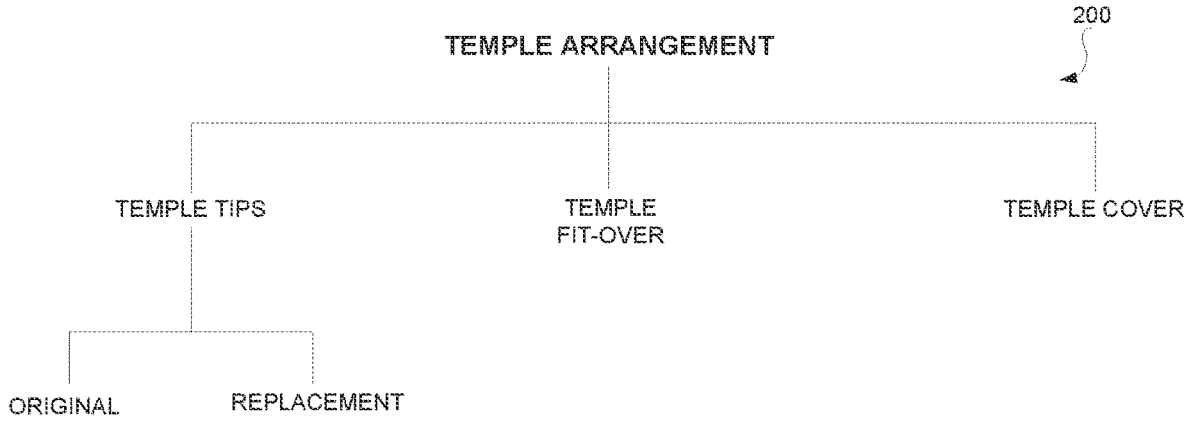
200
TEMPLE ARRANGEMENT
TEMPLE TIPS
TEMPLE FIT-OVER
TEMPLE COVER
ORIGINAL
REPLACEMENT

FIG. 2

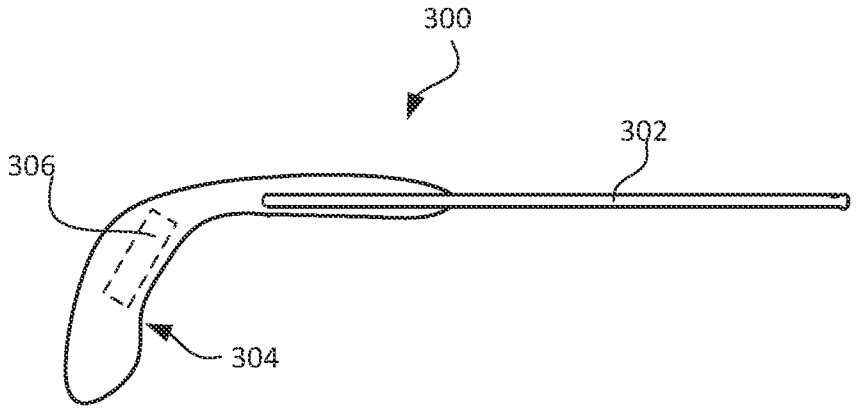

FIG. 3A

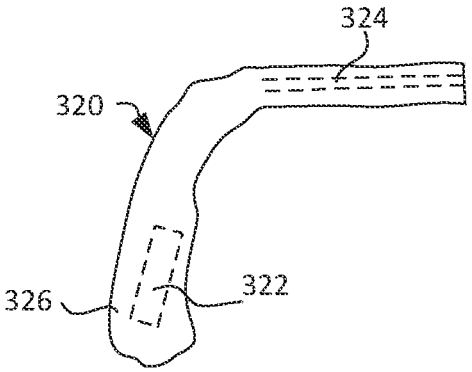

FIG. 3B

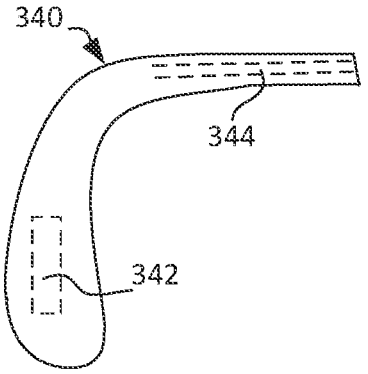

FIG. 3C

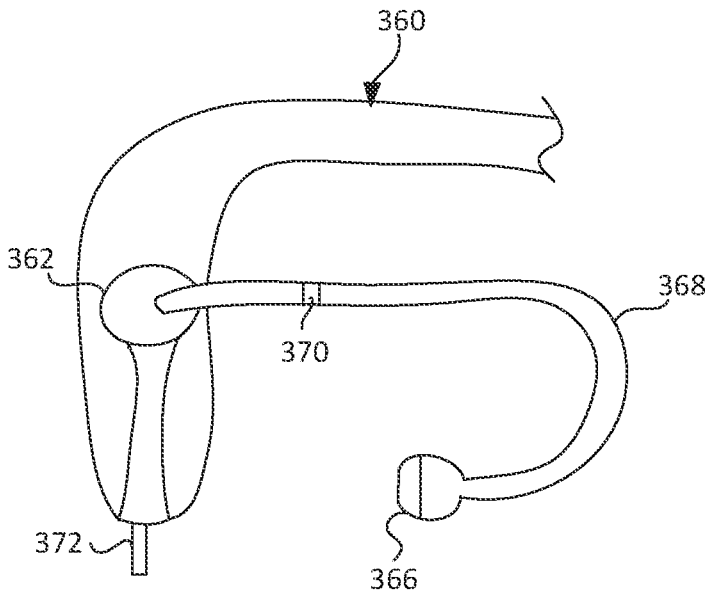

FIG. 3D

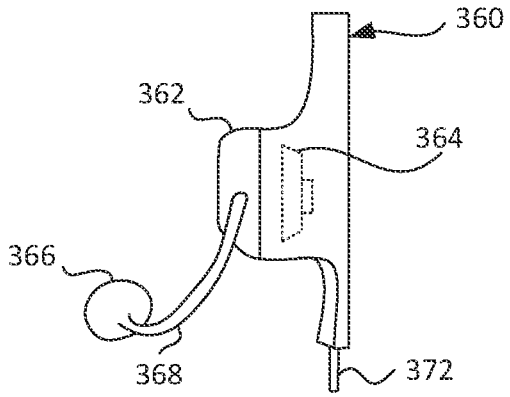

FIG. 3E

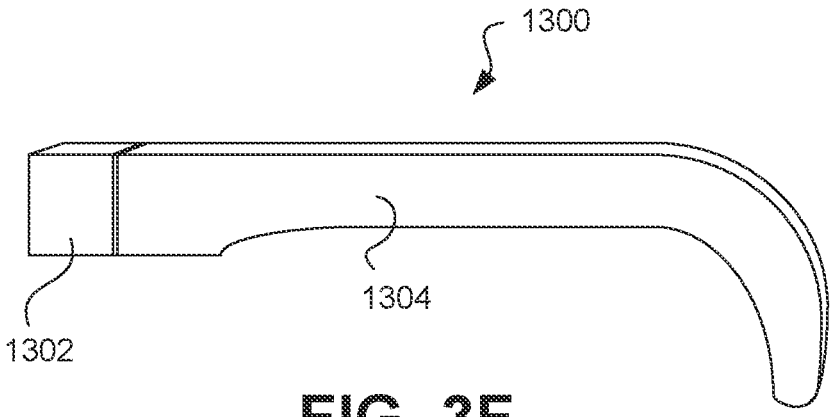

FIG. 3F

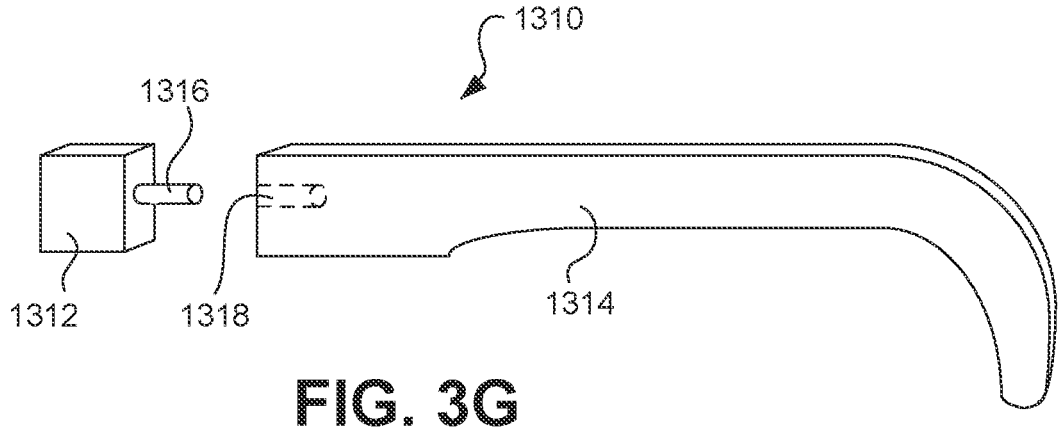

FIG. 3G

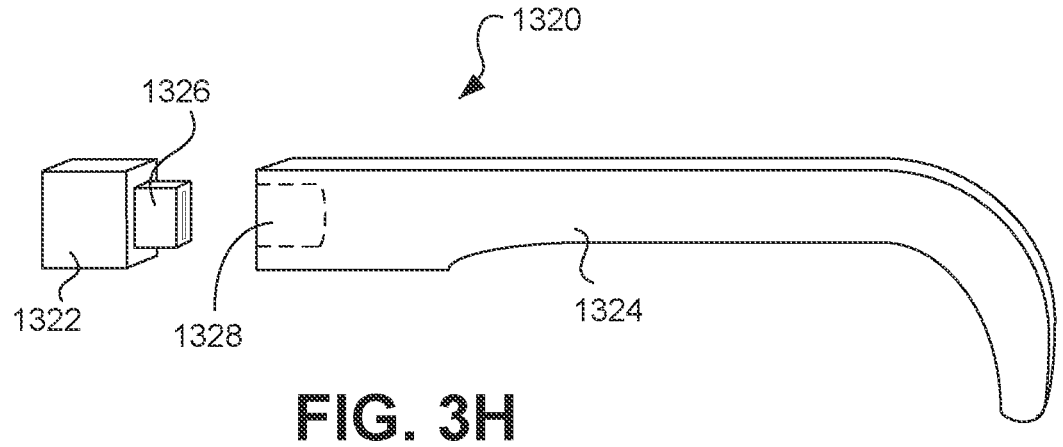

FIG. 3H

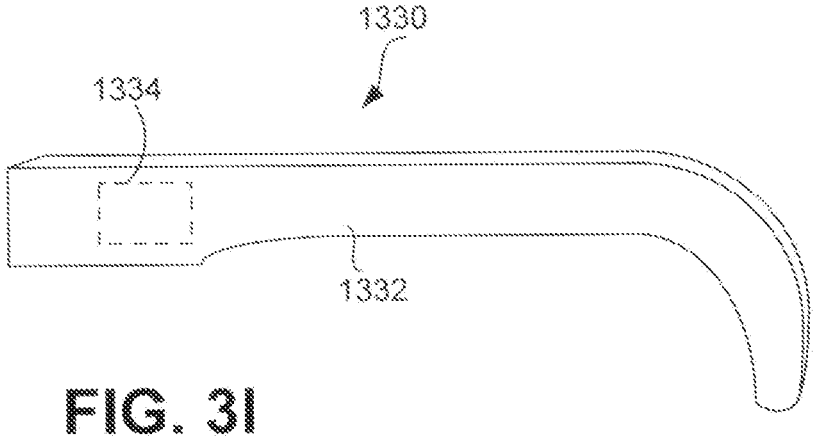

FIG. 3I

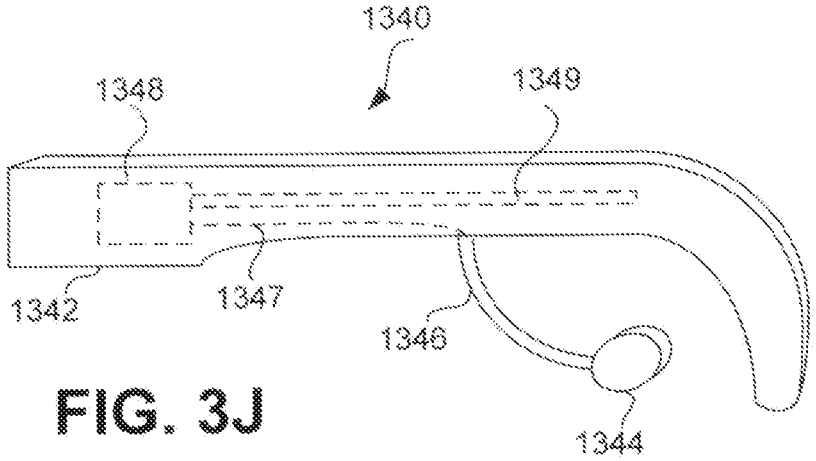

FIG. 3J

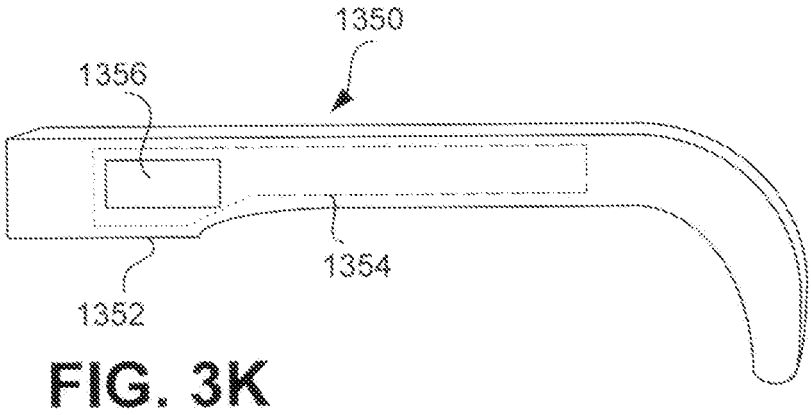

FIG. 3K

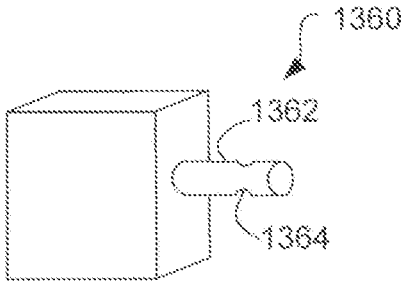

FIG. 3L

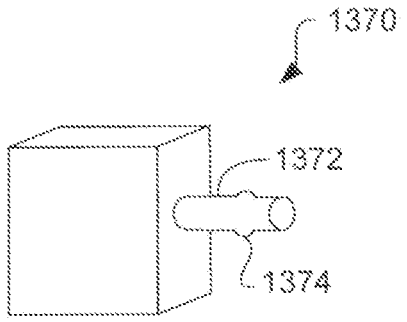

FIG. 3M

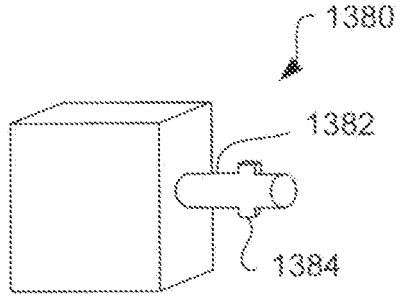

FIG. 3N

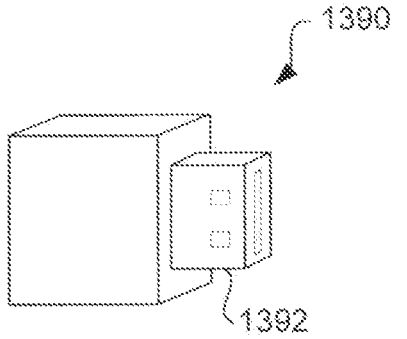

FIG. 3O

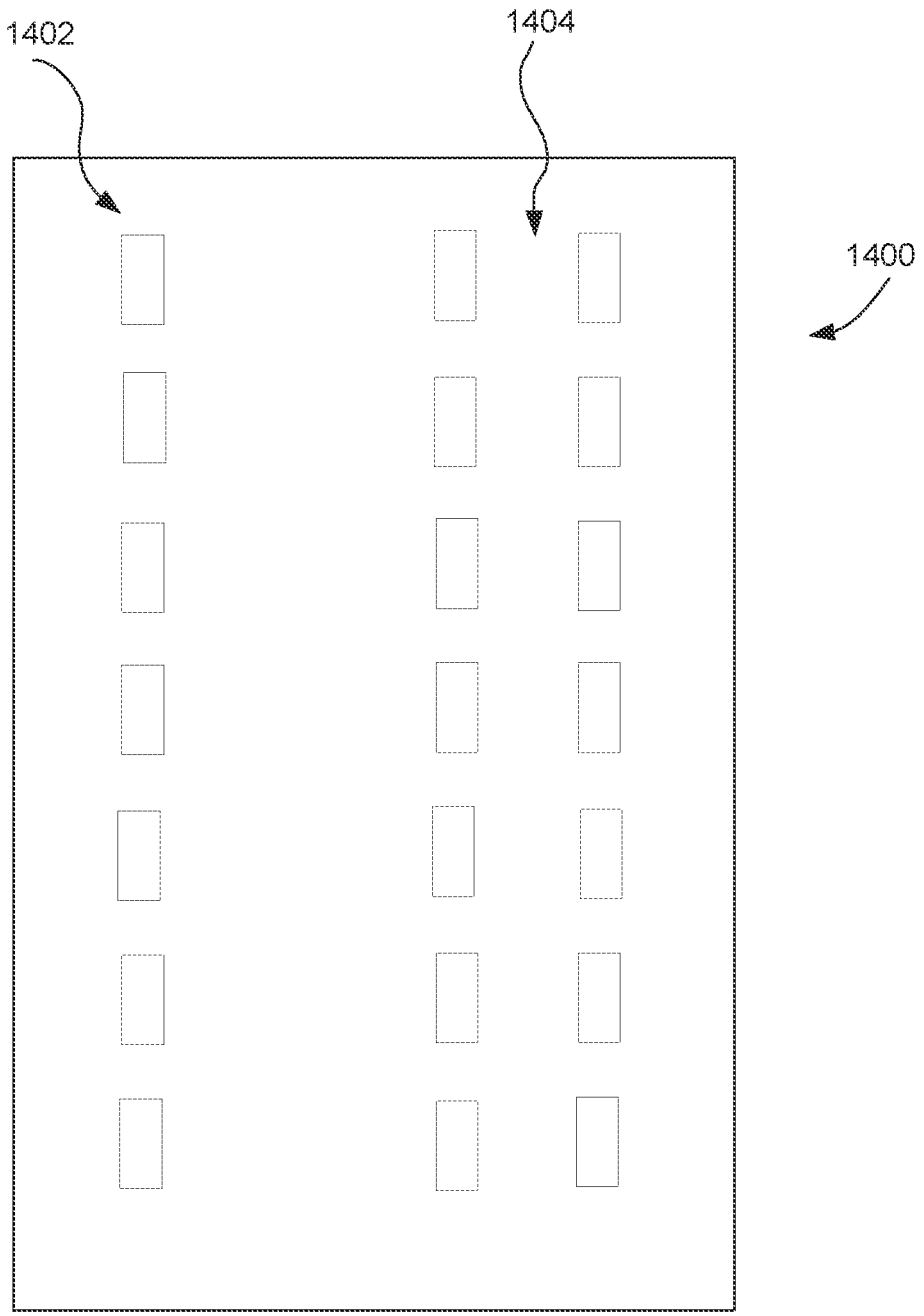

FIG. 3P

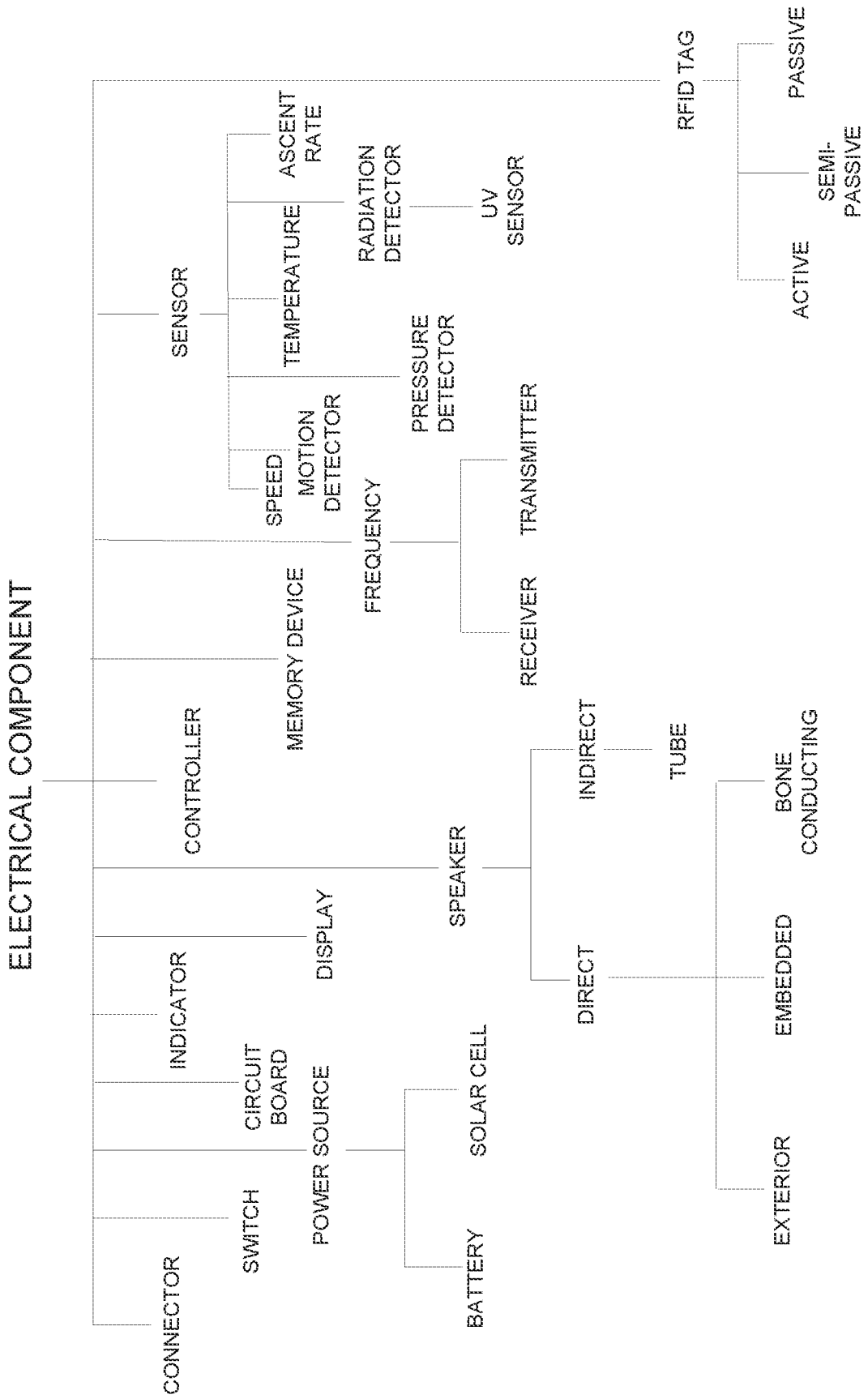
ELECTRICAL COMPONENT
CONNECTOR
SWITCH
POWER SOURCE
BATTERY
SOLAR CELL
CIRCUIT BOARD
INDICATOR
DISPLAY
CONTROLLER
SPEAKER
DIRECT
INDIRECT
TUBE
EXTERIOR
EMBEDDED
BONE CONDUCTING
MEMORY DEVICE
FREQUENCY
RECEIVER
TRANSMITTER
SENSOR
SPEED
MOTION DETECTOR
TEMPERATURE
PRESSURE DETECTOR
RADIATION DETECTOR
UV SENSOR
ASCENT RATE
RFID TAG
ACTIVE
SEMI-PASSIVE
PASSIVE

FIG. 4

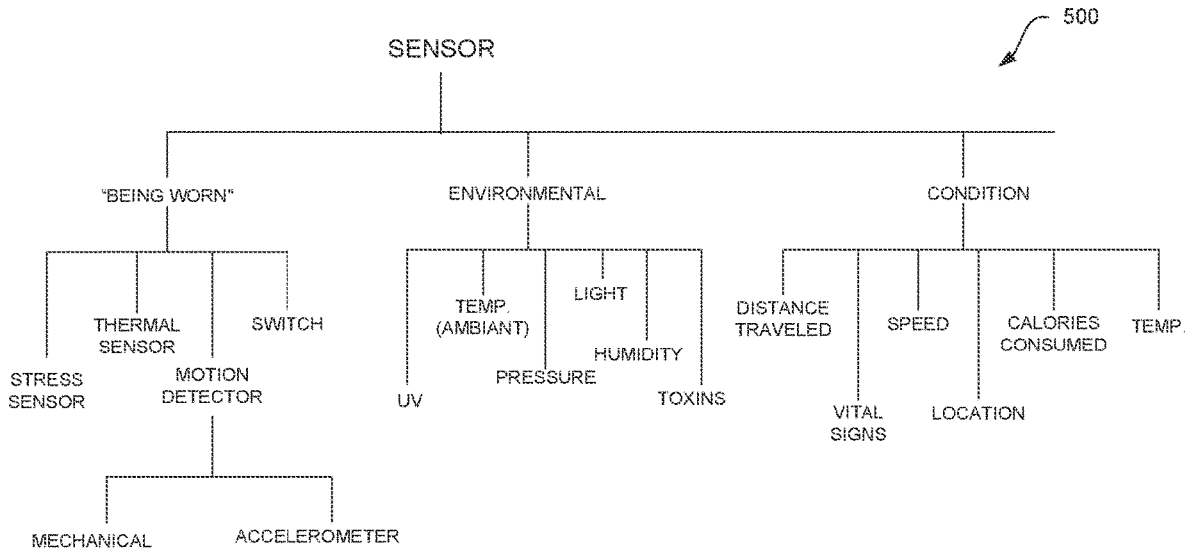
500
SENSOR
"BEING WORN"
ENVIRONMENTAL
CONDITION
STRESS SENSOR
THERMAL SENSOR
MOTION DETECTOR
SWITCH
UV
TEMP. (AMBIANT)
PRESSURE
LIGHT
HUMIDITY
TOXINS
DISTANCE TRAVELED
VITAL SIGNS
SPEED
LOCATION
CALORIES CONSUMED
TEMP.
MECHANICAL
ACCELEROMETER

FIG. 5

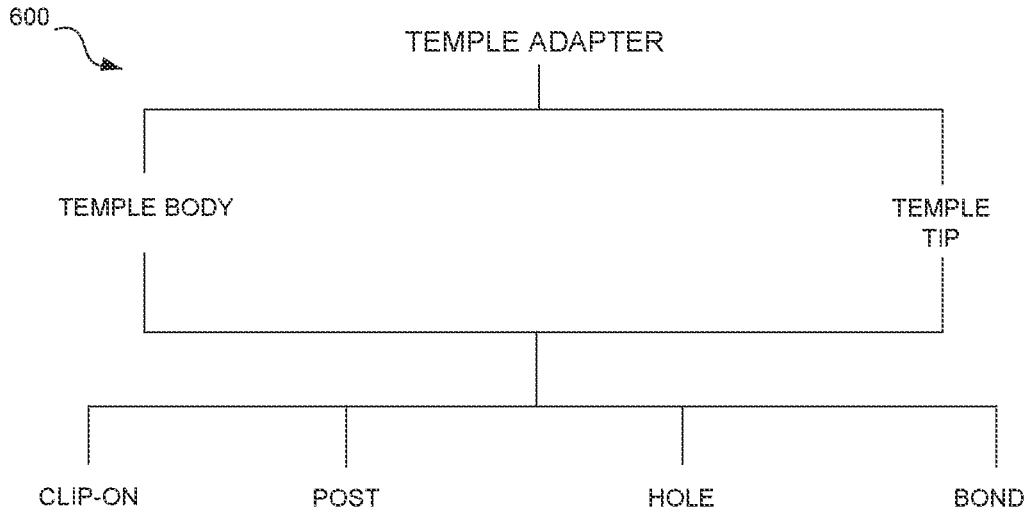
600
TEMPLE ADAPTER
TEMPLE BODY
TEMPLE TIP
CLIP-ON
POST
HOLE
BOND

FIG. 6

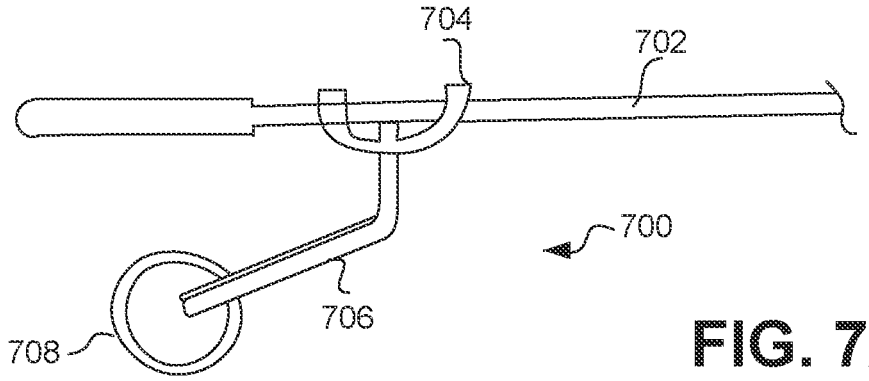

FIG. 7A

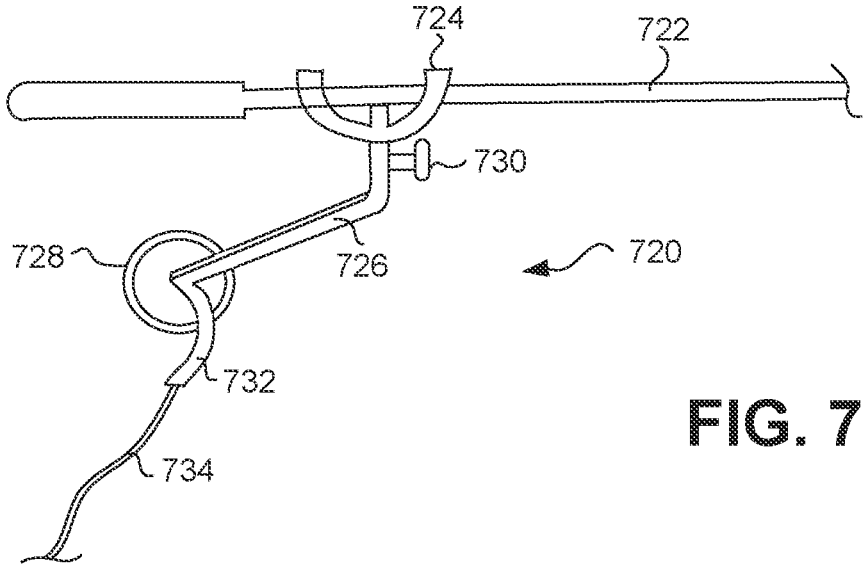

FIG. 7B

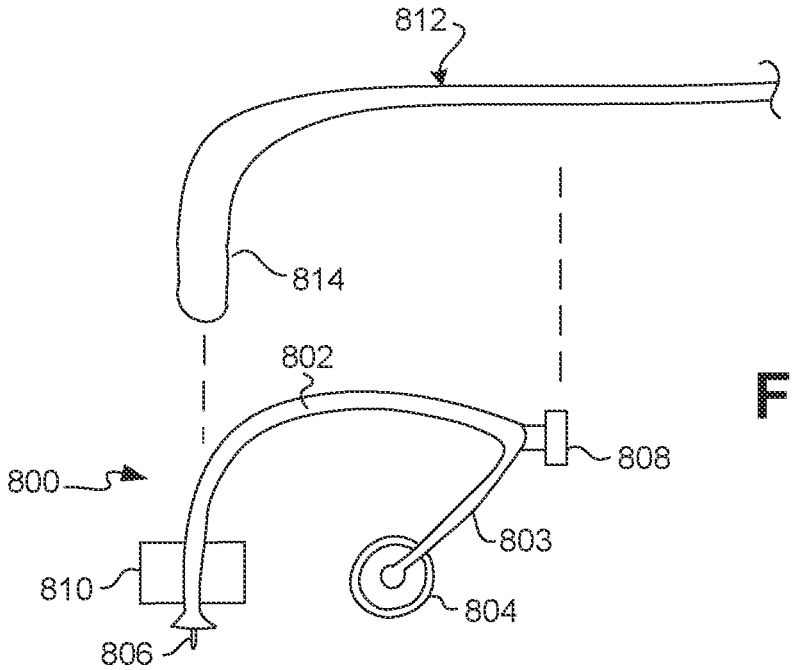

FIG. 8A

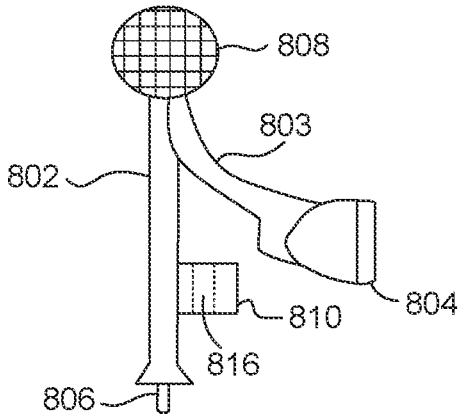

FIG. 8B

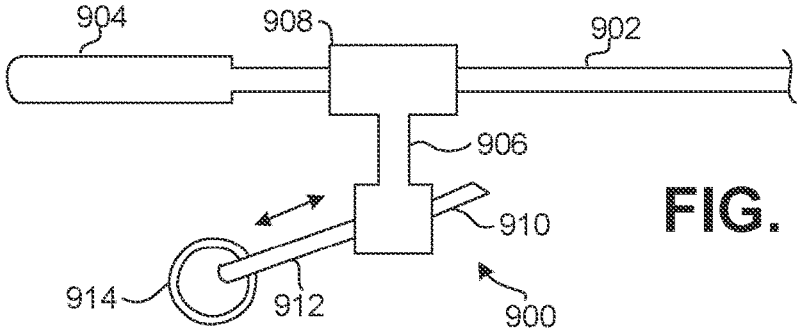

FIG. 9A

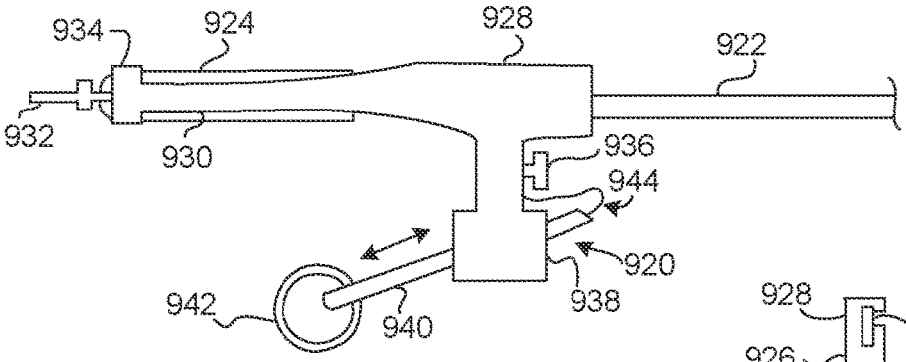

FIG. 9B

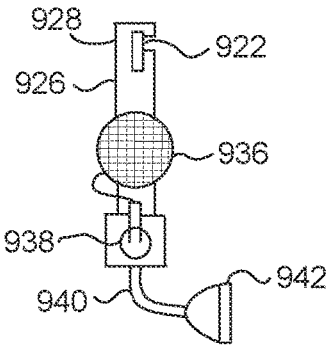

FIG. 9C

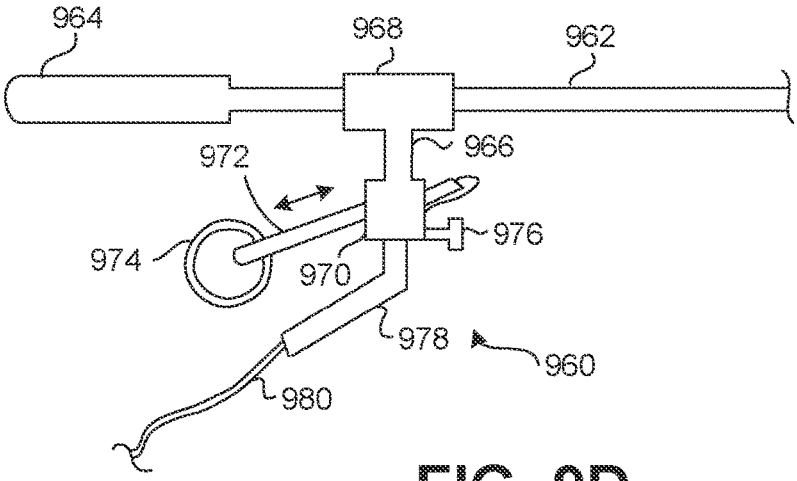

FIG. 9D

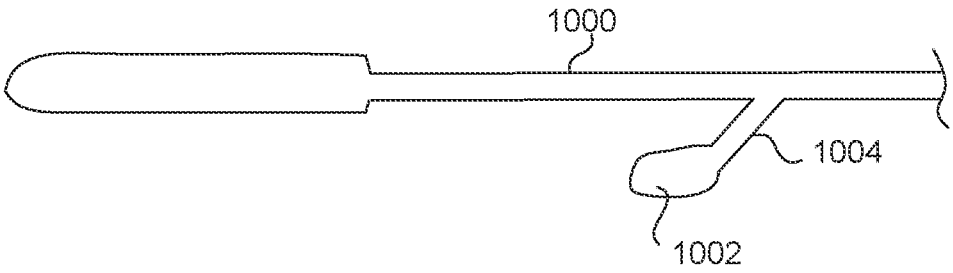

FIG. 10A

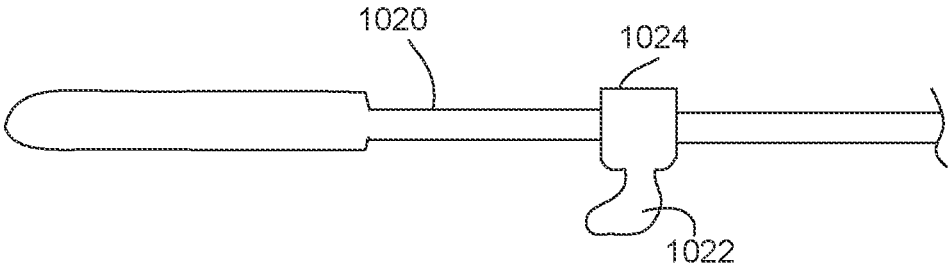

FIG. 10B

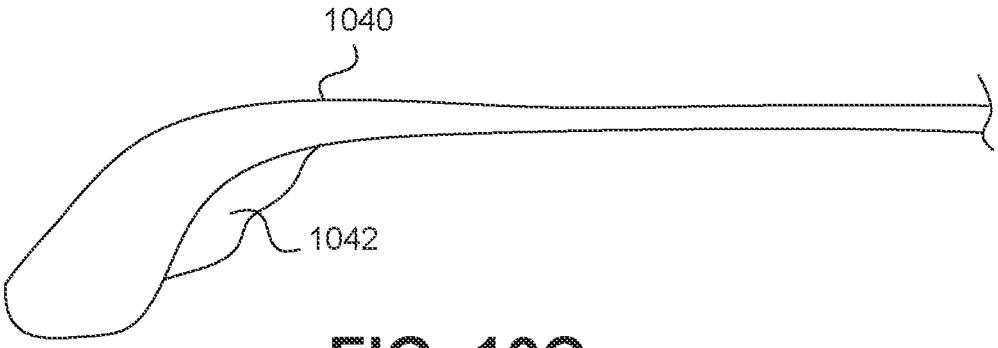

FIG. 10C

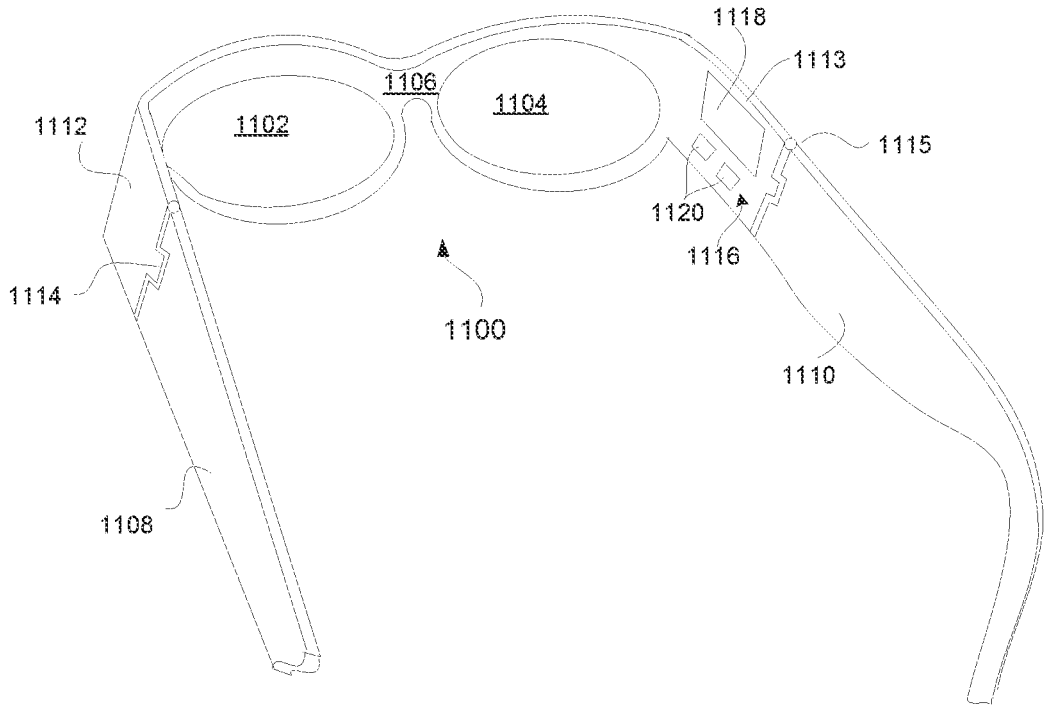
1118
1113
1106
1104
1112
1102
1115
1120
1116
1114
1100
1110
1108

FIG. 11A

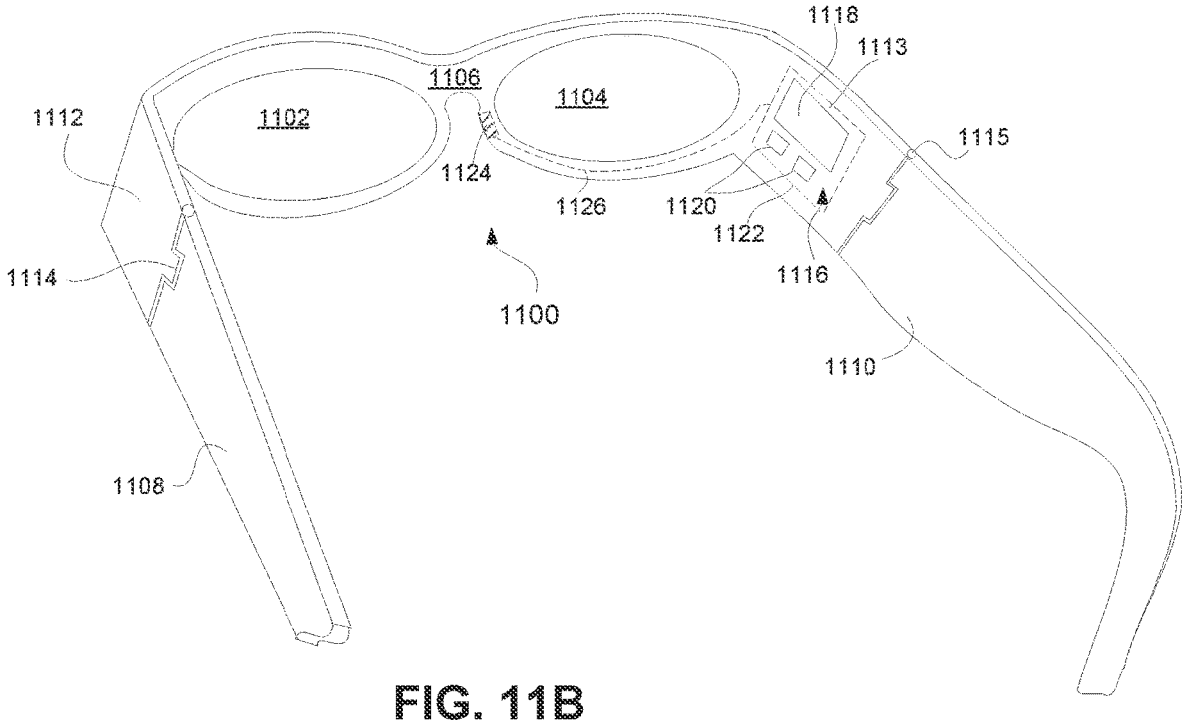
1118
1113
1106
1104
1102
1112
1115
1124
1126
1120
1122
1116
1114
1100
1110
1108

FIG. 11B

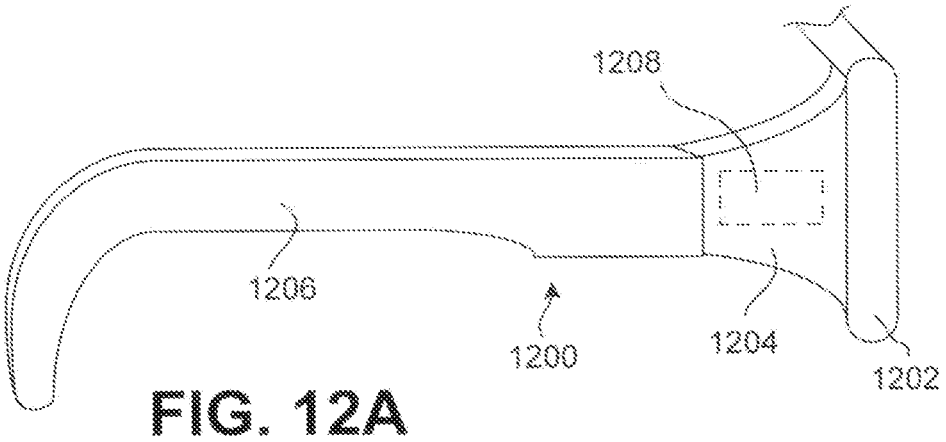

FIG. 12A

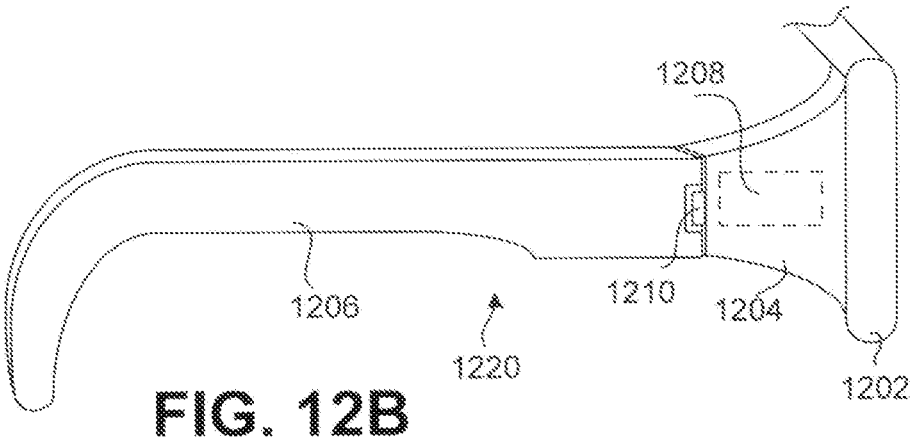

FIG. 12B

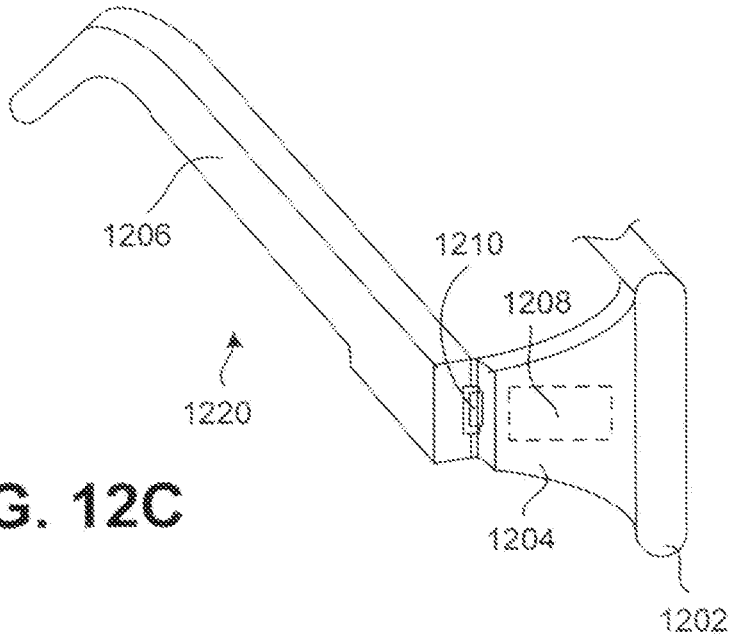

FIG. 12C

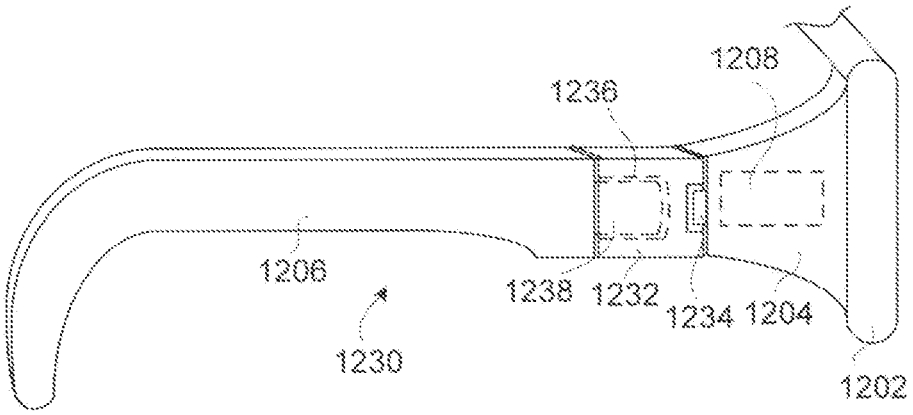

FIG. 12D

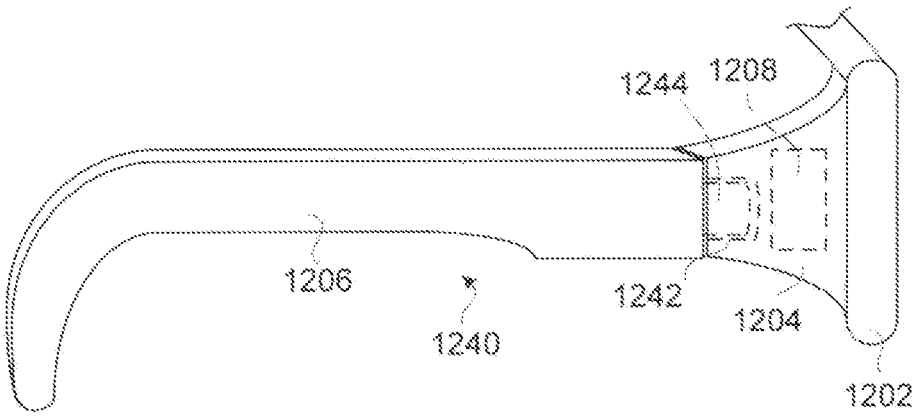

FIG. 12E

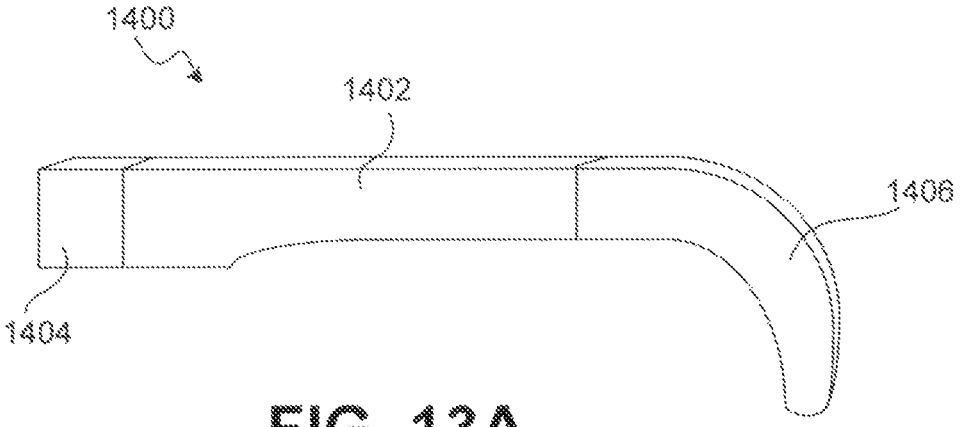

FIG. 13A

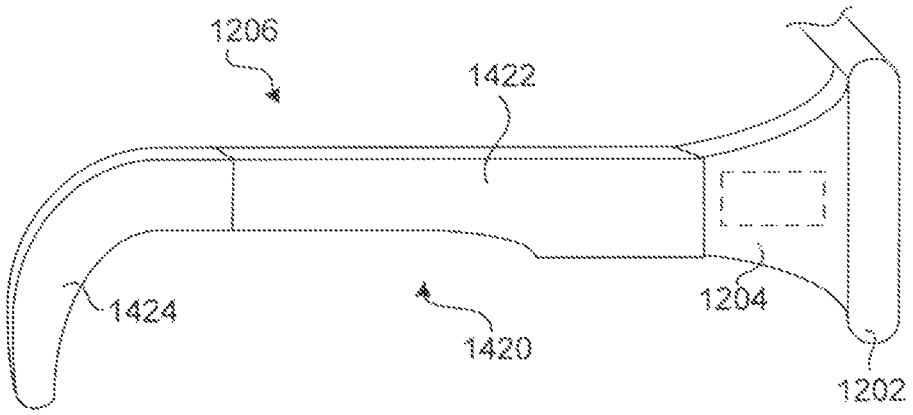

FIG. 13B

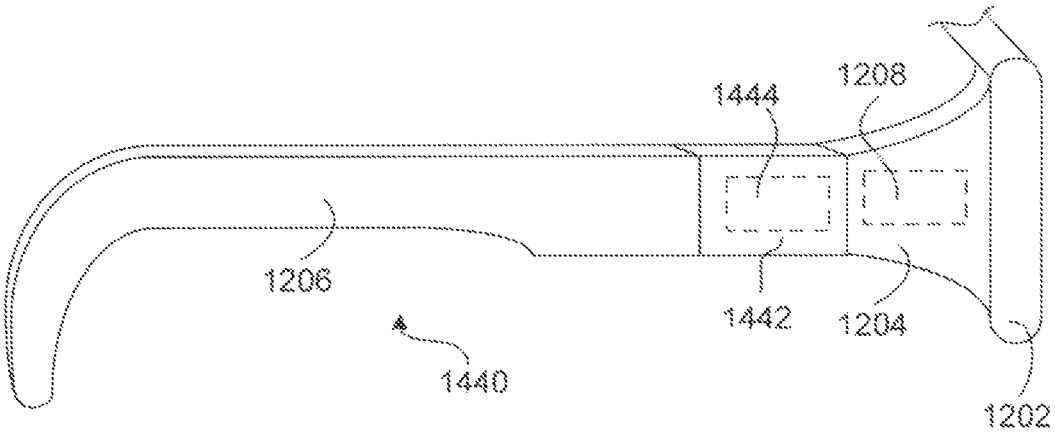

FIG. 13C

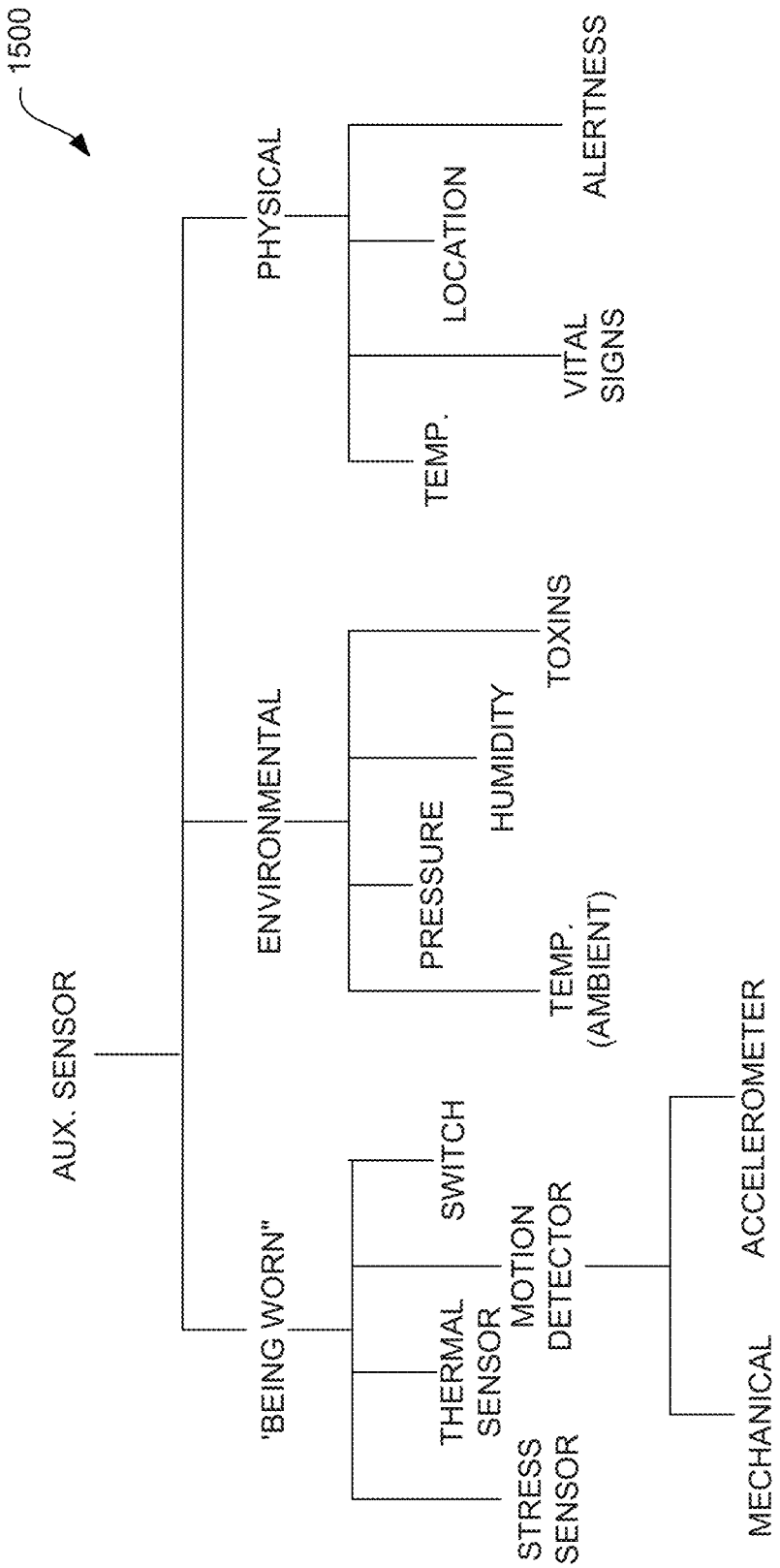
1500
AUX. SENSOR
PHYSICAL
ENVIRONMENTAL
'BEING WORN"
TEMP.
LOCATION
VITAL SIGNS
ALERTNESS
PRESSURE
HUMIDITY
TOXINS
TEMP. (AMBIENT)
THERMAL SENSOR
SWITCH
STRESS SENSOR
MOTION DETECTOR
MECHANICAL
ACCELEROMETER

FIG. 14

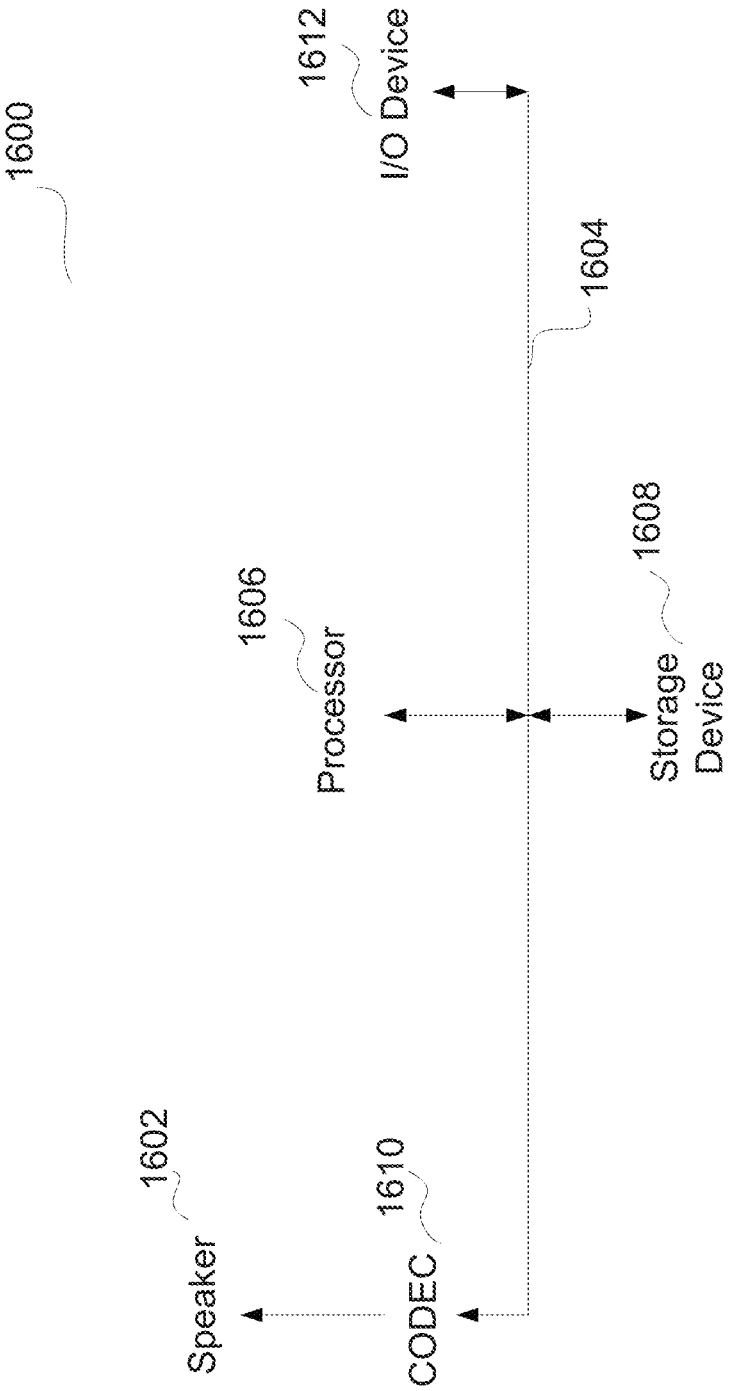
1600
1612
I/O Device
1604
1606
Processor
1608
Storage Device
1602
Speaker
1610
CODEC

FIG. 15

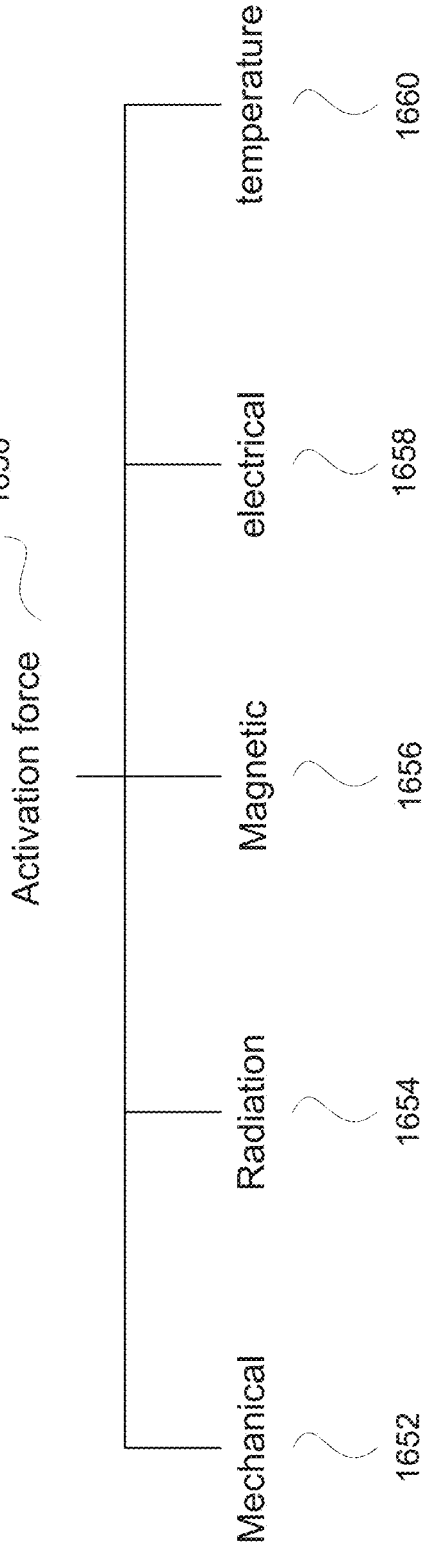
Activation force
1650
Mechanical
1652
Radiation
1654
Magnetic
1656
electrical
1658
temperature
1660

FIG. 16

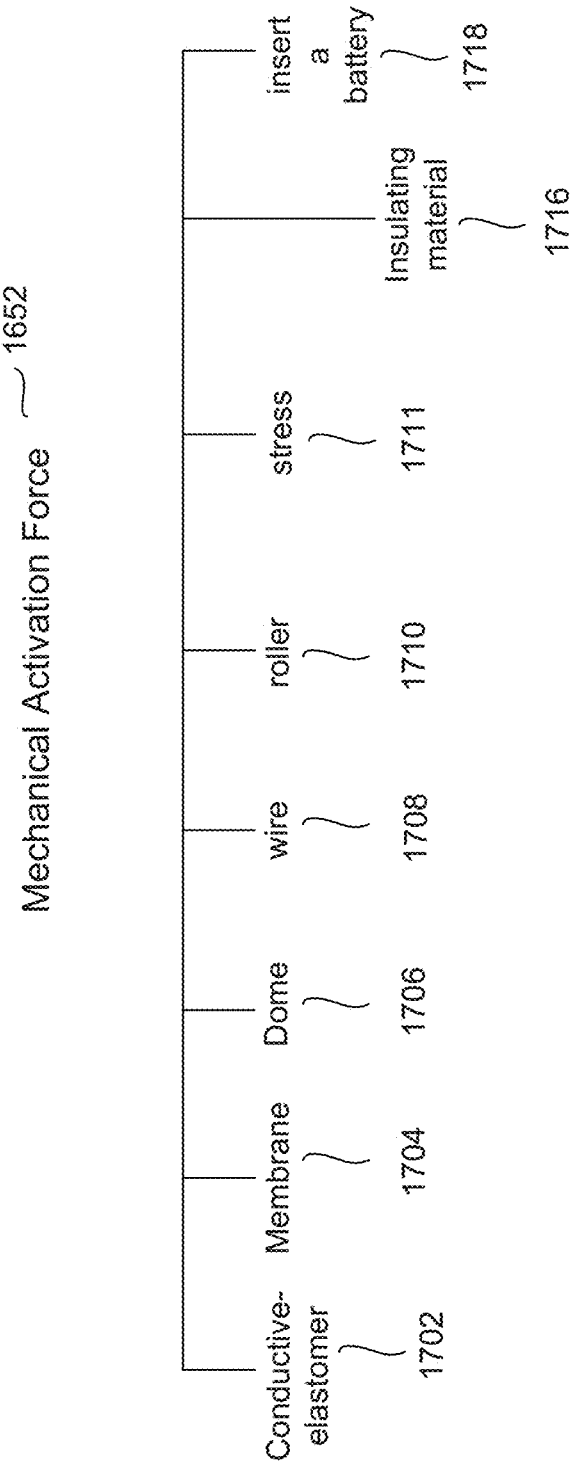
Mechanical Activation Force
1652
Conductive-elastomer
1702
Membrane
1704
Dome
1706
wire
1708
roller
1710
stress
1711
Insulating material
1716
insert a battery
1718

FIG. 17

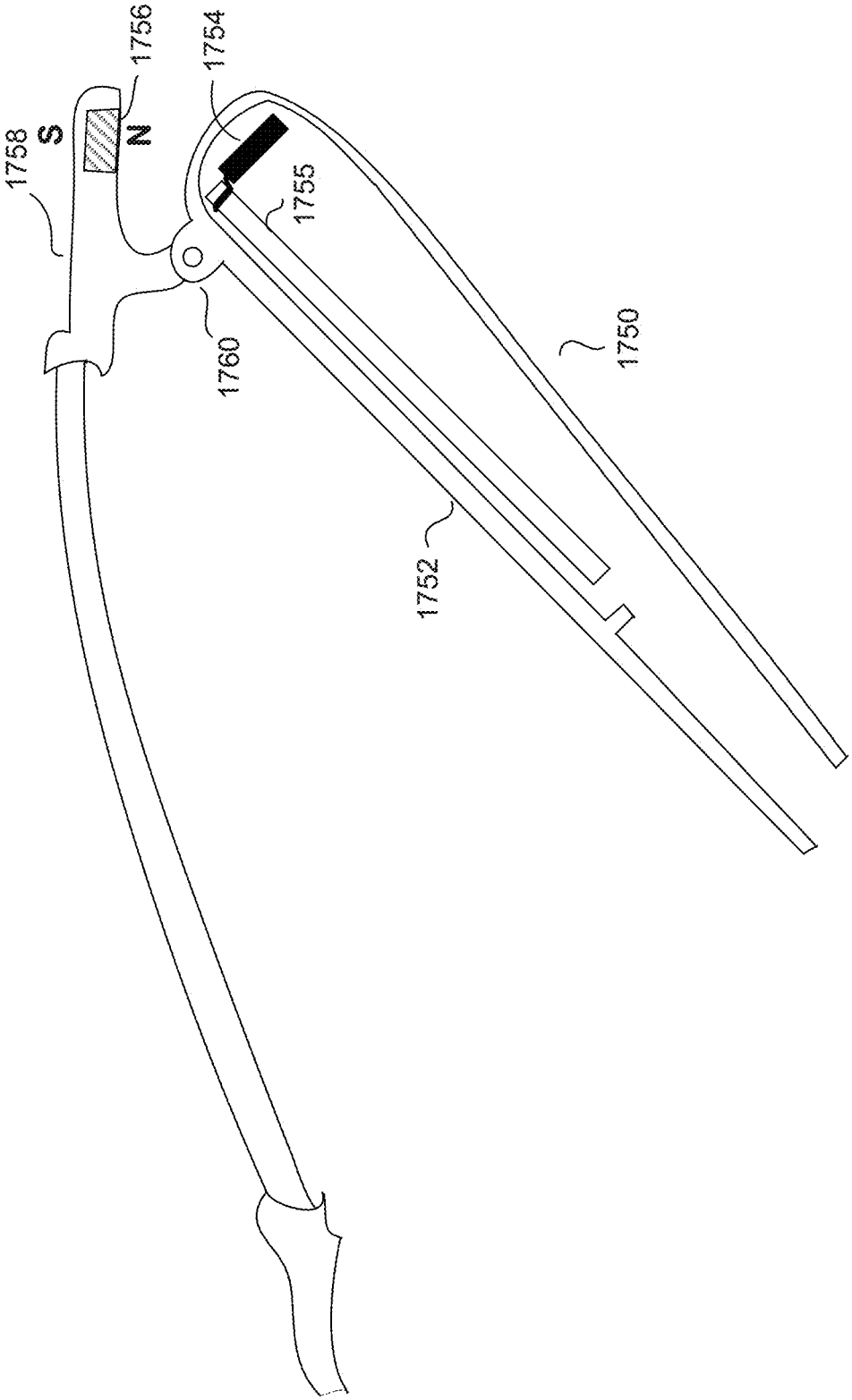

FIG. 18

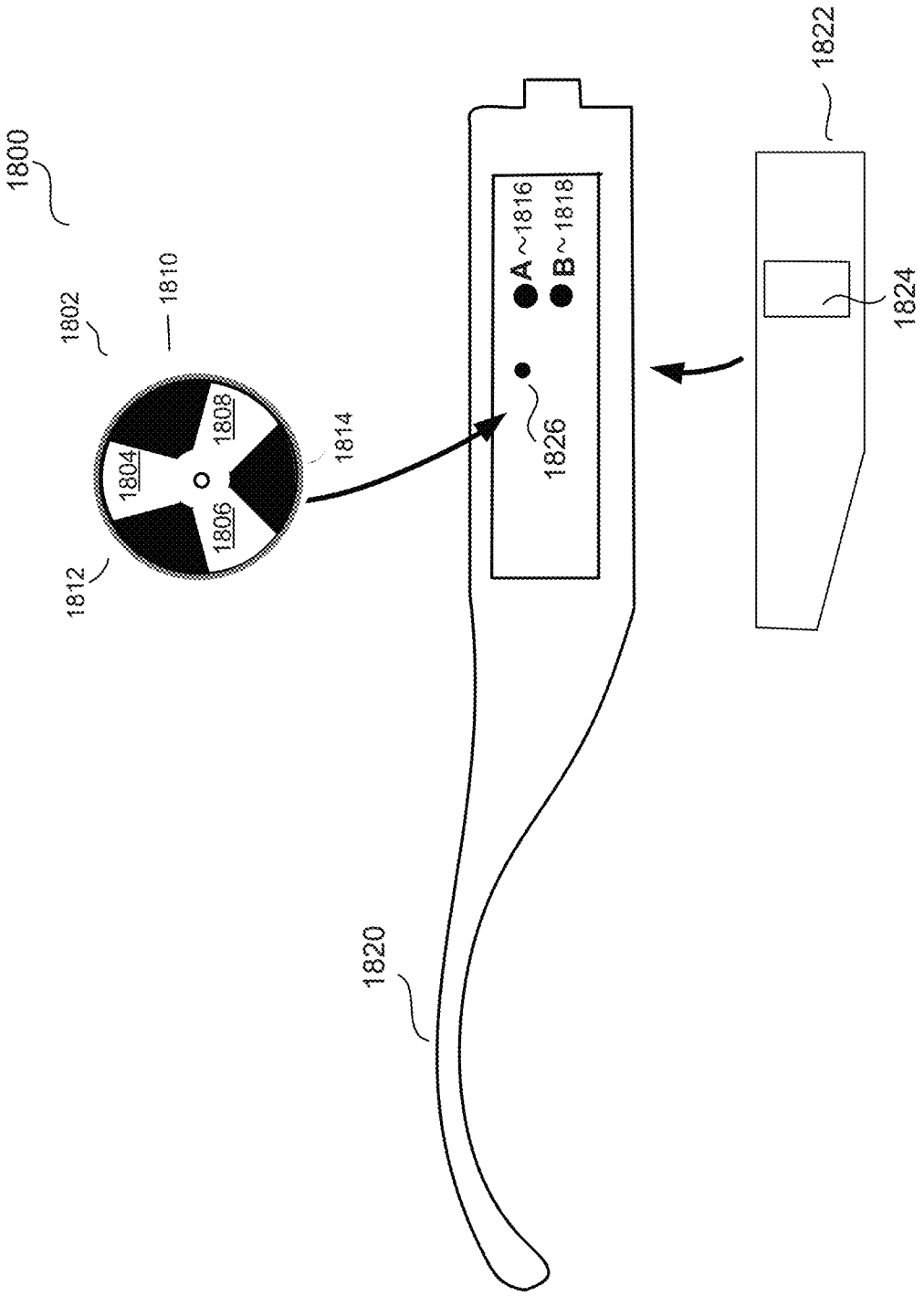
1800
1802
1810
1812
1804
1806
1808
1814
1820
1826
A ~1816
B ~1818
1822
1824

FIG. 19A

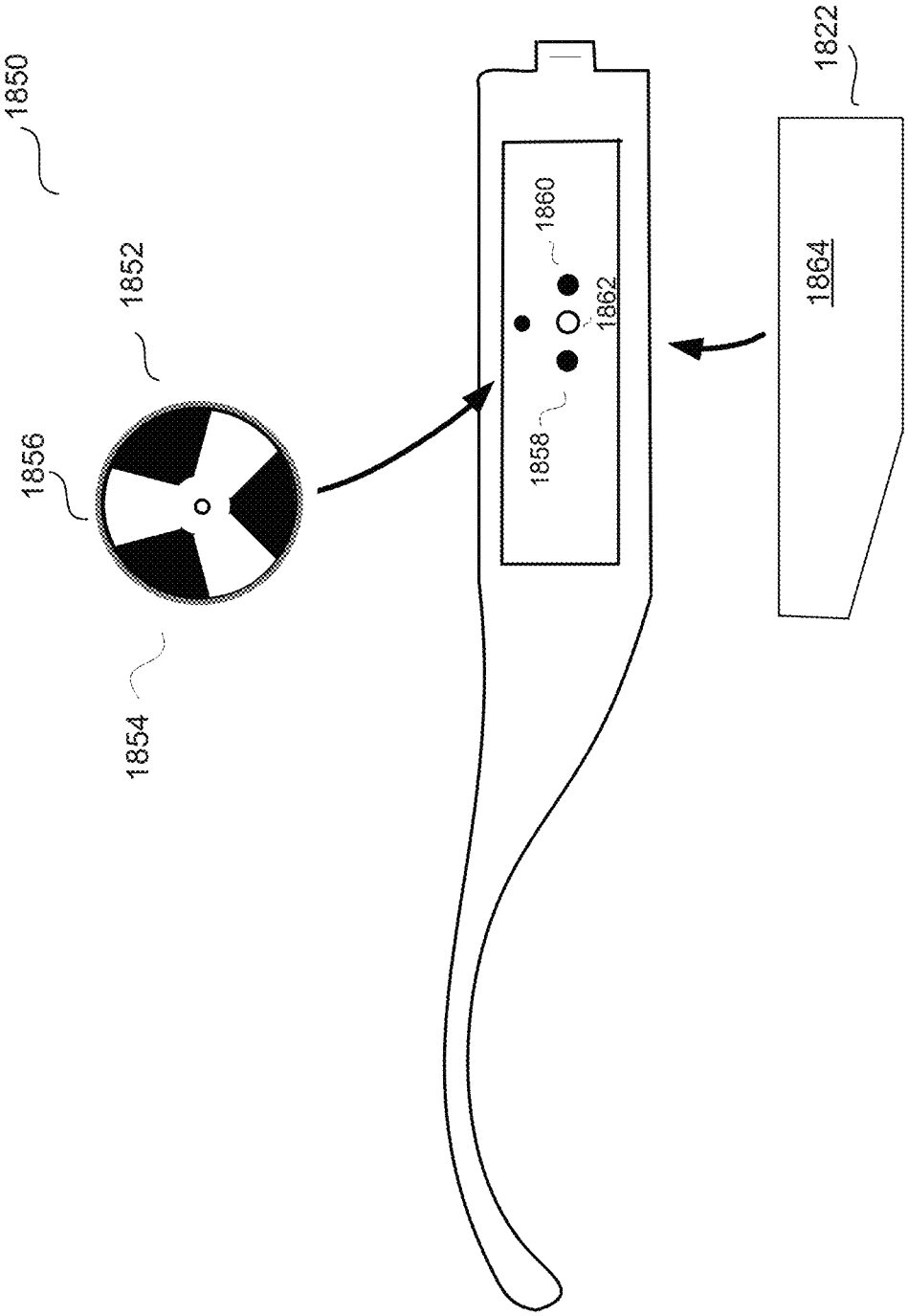

FIG. 19B

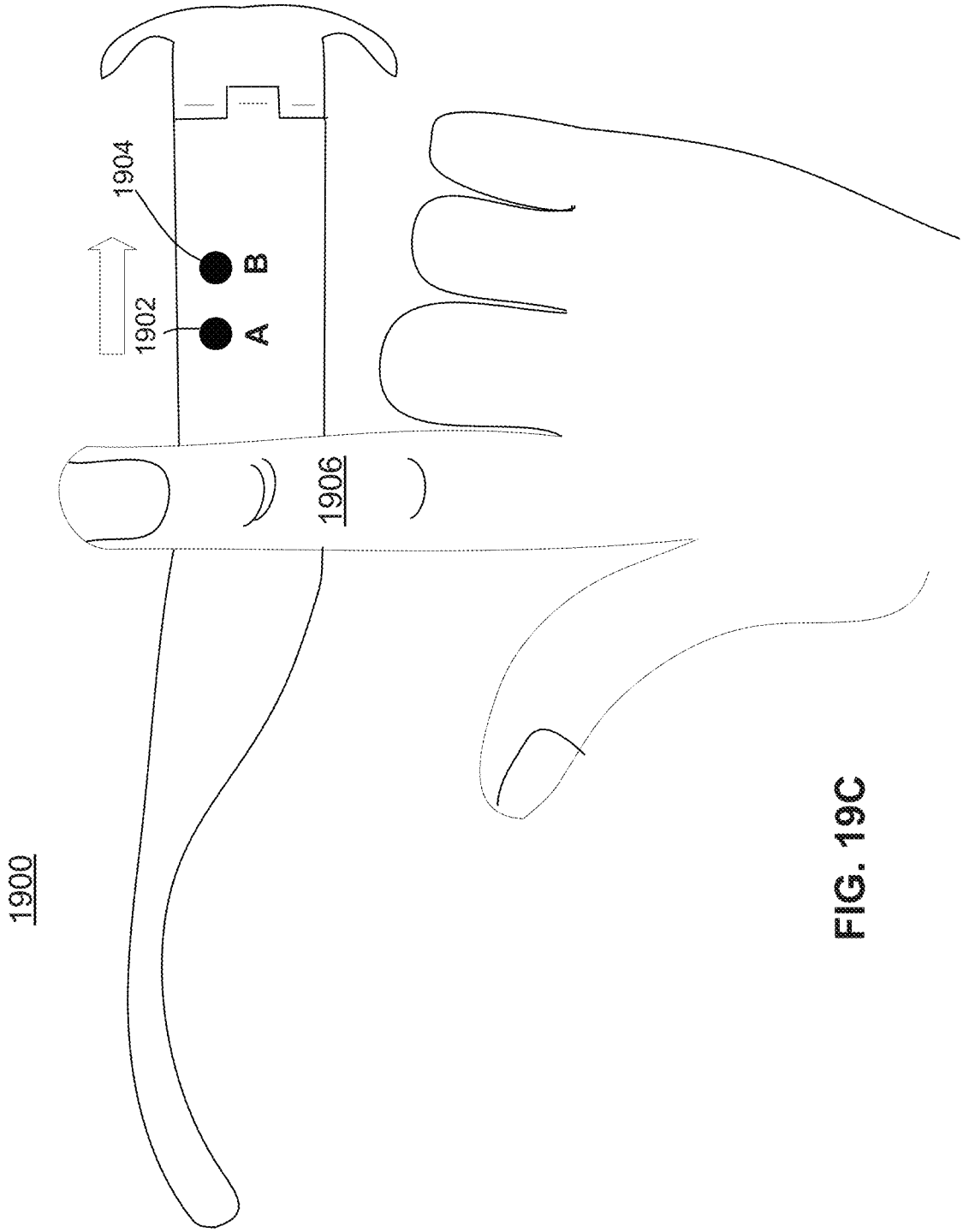

FIG. 19C

SYSTEM FOR CHARGING EMBEDDED BATTERY IN WIRELESS HEAD-WORN PERSONAL ELECTRONIC APPARATUS

CROSS-REFERENCE TO RELATED APPLICATIONS

This application is a continuation of U.S. patent application Ser. No. 16/182,969, filed Nov. 7, 2018, and entitled "EYEWEAR HOUSING FOR CHARGING EMBEDDED BATTERY IN EYEWEAR FRAME" which is incorporated herein by reference, which in turn is a continuation of U.S. patent application Ser. No. 16/127,957, now U.S. Pat. No. 11,086,147, filed Sep. 11, 2018, and entitled "EYEWEAR SUPPORTING ELECTRICAL COMPONENTS AND APPARATUS THEREFOR" which is incorporated herein by reference, which in turn is a continuation of U.S. patent application Ser. No. 14/715,501, now U.S. Pat. No. 10,330,956, filed May 18, 2015, and entitled "EYEWEAR SUPPORTING ELECTRICAL COMPONENTS AND APPARATUS THEREFOR" which is incorporated herein by reference, which in turn is a continuation of U.S. patent application Ser. No. 13/367,346, filed Feb. 6, 2012, now U.S. Pat. No. 9,033,493, and entitled "EYEWEAR SUPPORTING ELECTRICAL COMPONENTS AND APPARATUS THEREFOR" which is incorporated herein by reference, which in turn is a continuation of U.S. patent application Ser. No. 12/462,286, filed Jul. 31, 2009, now U.S. Pat. No. 8,109,629, and entitled "EYEWEAR SUPPORTING ELECTRICAL COMPONENTS AND APPARATUS THEREFOR" which is incorporated herein by reference, which in turn is a continuation of U.S. patent application Ser. No. 11/580,222, filed Oct. 11, 2006, now U.S. Pat. No. 7,581,833, and entitled "EYEWEAR SUPPORTING AFTER-MARKET ELECTRICAL COMPONENTS" which is hereby incorporated herein by reference.

This application and U.S. patent application Ser. No. 11/580,222 references U.S. patent application Ser. No. 11/183,269, filed Jul. 15, 2005, now U.S. Pat. No. 7,922,321, and entitled "EYEGLASSES SUPPORTING AFTER MARKET ELECTRICAL COMPONENTS," which is hereby incorporated herein by reference, which references U.S. patent application Ser. No. 10/964,011, filed Oct. 12, 2004, now U.S. Pat. No. 7,192,136, and entitled "TETHERED ELECTRICAL COMPONENTS FOR EYEGLASSES" which is hereby incorporated herein by reference, which in turn references each of: (i) U.S. Provisional Patent Application No. 60/509,631, filed Oct. 9, 2003, and entitled "TETHERED ELECTRICAL COMPONENTS FOR EYEGLASSES," which is hereby incorporated herein by reference; (ii) U.S. Provisional Patent Application No. 60/527,565, filed Dec. 8, 2003, and entitled "ADAPTABLE COMMUNICATION TECHNIQUES FOR ELECTRONIC DEVICES," which is hereby incorporated herein by reference; (iii) U.S. Provisional Patent Application No. 60/562,798, filed Apr. 15, 2004, entitled "EYEWEAR WITH ULTRAVIOLET DETECTION SYSTEM," and which is hereby incorporated herein by reference; (iv) U.S. Provisional Patent Application No. 60/583,169, filed Jun. 26, 2004, entitled "ELECTRICAL COMPONENTS FOR USE WITH EYEWEAR, AND METHODS THEREFOR," and which is hereby incorporated herein by reference; (v) U.S. Provisional Patent Application No. 60/592,045, filed Jul. 28, 2004, entitled "EYEGLASSES WITH A CLOCK OR OTHER ELECTRICAL COMPONENT," and which is hereby incorporated herein by reference; and (vi) U.S. Provisional Patent Application No. 60/605,191, filed Aug. 28, 2004, entitled "ELECTRICAL COMPONENTS FOR USE WITH EYEWEAR, AND METHODS THEREFOR," and which is hereby incorporated herein by reference.

This application and U.S. patent application Ser. No. 11/580,222 also claim priority to each of: (i) U.S. Provisional Patent Application No. 60/725,999, filed Oct. 11, 2005, and entitled "EYEWEAR SUPPORTING AFTER-MARKET ELECTRICAL COMPONENTS," which is hereby incorporated herein by reference; (ii) U.S. Provisional Patent Application No. 60/725,896, filed Oct. 11, 2005, and entitled "EYEGLASSES WITH ELECTRICAL COMPONENTS," which is hereby incorporated herein by reference; (iii) U.S. Provisional Patent Application No. 60/787,850, filed Apr. 1, 2006, and entitled "EYEGLASSES WITH A HEART RATE MONITOR," which is hereby incorporated herein by reference; and (iv) U.S. Provisional Patent Application No. 60/846,150, filed Sep. 20, 2006, and entitled "EYEGLASSES WITH ACTIVITY MONITORING," which is hereby incorporated herein by reference.

This application, by way of U.S. patent application Ser. No. 16/182,969, is a continuation of U.S. patent application Ser. No. 16/049,120, filed Jul. 30, 2018, and entitled "EYEWEAR SUPPORTING EMBEDDED ELECTRONIC COMPONENTS," which is hereby incorporated herein by reference, which in turn is a continuation of U.S. patent application Ser. No. 15/375,423, filed Dec. 12, 2016, and entitled "EYEWEAR SUPPORTING EMBEDDED ELECTRONIC COMPONENTS," which is hereby incorporated herein by reference, which in turn is a continuation of U.S. patent application Ser. No. 14/557,409, filed Dec. 1, 2014, and entitled "EYEWEAR SUPPORTING EMBEDDED ELECTRONIC COMPONENTS," now U.S. Pat. No. 9,547,184, which is hereby incorporated herein by reference, which in turn is a continuation of U.S. patent application Ser. No. 13/955,336, filed Jul. 31, 2013, and entitled "EYEWEAR SUPPORTING BONE CONDUCTING SPEAKER," now U.S. Pat. No. 8,905,542, which is hereby incorporated herein by reference, which in turn is a continuation of U.S. patent application Ser. No. 13/085,402, filed Apr. 12, 2011, and entitled "EYEWEAR SUPPORTING AFTER-MARKET ELECTRICAL COMPONENTS," now U.S. Pat. No. 8,500,271, which is hereby incorporated herein by reference, which in turn references U.S. patent application Ser. No. 11/183,269, filed Jul. 15, 2005, and entitled "EYEWEAR SUPPORTING AFTER-MARKET ELECTRICAL COMPONENTS," now U.S. Pat. No. 7,922,321, which is hereby incorporated herein by reference, which in turn references U.S. patent application Ser. No. 10/964,011, filed Oct. 12, 2004, and entitled "TETHERED ELECTRICAL COMPONENTS FOR EYEGLASSES," now U.S. Pat. No. 7,192,136, which in turn references each of: (i) U.S. Provisional Patent Application No. 60/509,631, filed Oct. 9, 2003, and entitled "TETHERED ELECTRICAL COMPONENTS FOR EYEGLASSES," which is hereby incorporated herein by reference; (ii) U.S. Provisional Patent Application No. 60/527,565, filed Dec. 8, 2003, and entitled "ADAPTABLE COMMUNICATION TECHNIQUES FOR ELECTRONIC DEVICES," which is hereby incorporated herein by reference; (iii) U.S. Provisional Patent Application No. 60/562,798, filed Apr. 15, 2004, entitled "EYEWEAR WITH ULTRAVIOLET DETECTION SYSTEM," which is hereby incorporated herein by reference; (iv) U.S. Provisional Patent Application No. 60/583,169, filed Jun. 26, 2004, entitled "ELECTRICAL COMPONENTS FOR USE WITH EYEWEAR, AND METHODS THEREFOR," which is hereby incorporated herein by reference; and (v) U.S. Provisional Patent Appli-

cation No. 60/592,045, filed Jul. 28, 2004, entitled "EYEGLASSES WITH A CLOCK OR OTHER ELECTRICAL COMPONENT," which is hereby incorporated herein by reference; and (vi) U.S. Provisional Patent Application No. 60/605,191, filed Aug. 28, 2004, entitled "ELECTRICAL COMPONENTS FOR USE WITH EYEWEAR, AND METHODS THEREFOR," which is hereby incorporated herein by reference.

This application, by way of U.S. patent application Ser. No. 11/183,269, also references each of: (i) U.S. Provisional Patent Application No. 60/592,045, filed Jul. 28, 2004, entitled "EYEGLASSES WITH A CLOCK OR OTHER ELECTRICAL COMPONENT," which is hereby incorporated herein by reference; (ii) U.S. Provisional Patent Application No. 60/605,191, filed Aug. 28, 2004, entitled "ELECTRICAL COMPONENTS FOR USE WITH EYEWEAR, AND METHODS THEREFOR," which is hereby incorporated herein by reference; (iii) U.S. Provisional Patent Application No. 60/618,107, filed Oct. 12, 2004, and entitled "TETHERED ELECTRICAL COMPONENTS FOR EYEGLASSES," which is hereby incorporated herein by reference; (iv) U.S. Provisional Patent Application No. 60/620,238, filed Oct. 18, 2004, entitled "EYEGLASSES WITH HEARING ENHANCED AND OTHER AUDIO SIGNAL-GENERATING CAPABILITIES," which is hereby incorporated herein by reference; (v) U.S. Provisional Patent Application No. 60/647,836, filed Jan. 31, 2005, and entitled "EYEGLASSES WITH HEART RATE MONITOR," which is hereby incorporated herein by reference; and (vi) U.S. Provisional Patent Application No. 60/647,826, filed Jan. 31, 2005, and entitled "EYEWEAR WITH ELECTRICAL COMPONENTS," which is hereby incorporated herein by reference.

This application, by way of U.S. patent application Ser. No. 16/182,969, is a continuation of U.S. patent application Ser. No. 15/409,723, filed Jan. 19, 2017, and entitled "EYEWEAR HOUSING FOR CHARGING EMBEDDED BATTERY IN EYEWEAR FRAME" which is hereby incorporated herein by reference, which in turn is a continuation of U.S. patent application Ser. No. 13/831,512, filed Mar. 14, 2013, and entitled "EYEWEAR SUPPORTING AFTER-MARKET ELECTRICAL COMPONENTS" which is hereby incorporated herein by reference, which in turn is a continuation of U.S. patent application Ser. No. 12/806,312, filed Aug. 10, 2010, and entitled "EYEWEAR WITH MULTI-PART TEMPLE FOR SUPPORTING ONE OR MORE ELECTRICAL COMPONENTS" (now U.S. Pat. No. 8,465,151) which is hereby incorporated herein by reference, which in turn is a continuation-in-part of U.S. patent application Ser. No. 12/462,286, filed Jul. 31, 2009, and entitled "EYEWEAR SUPPORTING ELECTRICAL COMPONENTS AND APPARATUS THEREFOR" (now U.S. Pat. No. 8,109,629) which is hereby incorporated herein by reference, which in turn is a continuation of U.S. patent application Ser. No. 11/580,222, filed Oct. 11, 2006, and entitled "EYEWEAR SUPPORTING AFTER-MARKET ELECTRICAL COMPONENTS" (now U.S. Pat. No. 7,581,833) which is hereby incorporated herein by reference.

This application, by way of U.S. patent application Ser. No. 10/964,011, also references each of: (i) U.S. Provisional Patent Application No. 60/509,631, filed Oct. 9, 2003, and entitled "TETHERED ELECTRICAL COMPONENTS FOR EYEGLASSES," which is hereby incorporated herein by reference; (ii) U.S. Provisional Patent Application No. 60/527,565, filed Dec. 8, 2003, and entitled "ADAPTABLE COMMUNICATION TECHNIQUES FOR ELECTRONIC DEVICES," which is hereby incorporated herein by reference; (iii) U.S. Provisional Patent Application No. 60/562,798, filed Apr. 15, 2004, entitled "EYEWEAR WITH ULTRAVIOLET DETECTION SYSTEM," and which is hereby incorporated herein by reference; (iv) U.S. Provisional Patent Application No. 60/583,169, filed Jun. 26, 2004, entitled "ELECTRICAL COMPONENTS FOR USE WITH EYEWEAR, AND METHODS THEREFOR," and which is hereby incorporated herein by reference; (v) U.S. Provisional Patent Application No. 60/592,045, filed Jul. 28, 2004, entitled "EYEGLASSES WITH A CLOCK OR OTHER ELECTRICAL COMPONENT," and which is hereby incorporated herein by reference; and (vi) U.S. Provisional Patent Application No. 60/605,191, filed Aug. 28, 2004, entitled "ELECTRICAL COMPONENTS FOR USE WITH EYEWEAR, AND METHODS THEREFOR," and which is hereby incorporated herein by reference.

This application via U.S. patent application Ser. No. 12/806,312 is also a continuation-in-part of U.S. patent application Ser. No. 12/317,043, filed Dec. 18, 2008, and entitled "EYEGLASSES WITH MONITORING CAPABILITY," (now U.S. Pat. No. 7,771,046) which is hereby incorporated herein by reference, which in turn is a continuation of U.S. patent application Ser. No. 12/214,435, filed Jun. 19, 2008, and entitled "EYEGLASSES WITH USER MONITORING," (now U.S. Pat. No. 7,481,531), which is hereby incorporated herein by reference, which in turn is a continuation of U.S. patent application Ser. No. 11/891,411, filed Aug. 9, 2007, and entitled "EYEGLASSES WITH ACTIVITY MONITORING" (now U.S. Pat. No. 7,401,918), which is hereby incorporated herein by reference, which in turn references U.S. patent application Ser. No. 11/183,276, filed Jul. 15, 2005, and entitled "EYEGLASSES WITH ACTIVITY MONITORING" (now U.S. Pat. No. 7,255,437), which is hereby incorporated herein by reference, which in turn references U.S. patent application Ser. No. 10/964,011, filed Oct. 12, 2004, and entitled "TETHERED ELECTRICAL COMPONENTS FOR EYEGLASSES" (now U.S. Pat. No. 7,192,136), which is hereby incorporated herein by reference.

This application via U.S. patent application Ser. No. 11/183,276 also references each of: (i) U.S. Provisional Patent Application No. 60/592,045, filed Jul. 28, 2004, entitled "EYEGLASSES WITH A CLOCK OR OTHER ELECTRICAL COMPONENT," and which is hereby incorporated herein by reference; (ii) U.S. Provisional Patent Application No. 60/605,191, filed Aug. 28, 2004, entitled "ELECTRICAL COMPONENTS FOR USE WITH EYEWEAR, AND METHODS THEREFOR," and which is hereby incorporated herein by reference; (iii) U.S. Provisional Patent Application No. 60/618,107, filed Oct. 12, 2004, and entitled "TETHERED ELECTRICAL COMPONENTS FOR EYEGLASSES," which is hereby incorporated herein by reference; (iv) U.S. Provisional Patent Application No. 60/620,238, filed Oct. 18, 2004, entitled "EYEGLASSES WITH HEARING ENHANCED AND OTHER AUDIO SIGNAL-GENERATING CAPABILITIES," and which is hereby incorporated herein by reference; (v) U.S. Provisional Patent Application No. 60/647,836, filed Jan. 31, 2005, and entitled "EYEGLASSES WITH HEART RATE MONITOR," which is hereby incorporated herein by reference; and (vi) U.S. Provisional Patent Application No. 60/647,826, filed Jan. 31, 2005, and entitled "EYEWEAR WITH ELECTRICAL COMPONENTS," which is hereby incorporated herein by reference.

This application via U.S. patent application Ser. No. 12/806,312 also references U.S. patent application Ser. No.

10/822,218, filed Apr. 12, 2004, and entitled "EYEGLASSES FOR WIRELESS COMMUNICATIONS," (now U.S. Pat. No. 7,792,552, which is hereby incorporated herein by reference, which in turn references each of: (i) U.S. Provisional Patent Application No. 60/462,591, filed Apr. 15, 2003, and entitled "EYEGLASSES FOR WIRELESS COMMUNICATION," which is hereby incorporated herein by reference; (ii) U.S. Provisional Patent Application No. 60/509,631, filed Oct. 9, 2003, and entitled "TETHERED ELECTRICAL COMPONENTS FOR EYEGLASSES," which is hereby incorporated herein by reference; and (iii) U.S. Provisional Patent Application No. 60/527,565, filed Dec. 8, 2003, and entitled "ADAPTABLE COMMUNICATION TECHNIQUES FOR ELECTRONIC DEVICES," which is hereby incorporated herein by reference.

In addition, this application is related to each of: (i) U.S. patent application Ser. No. 10/822,218, filed Apr. 12, 2004, and entitled "EYEGLASSES FOR WIRELESS COMMUNICATIONS," which is hereby incorporated herein by reference; (ii) U.S. patent application Ser. No. 10/964,011, filed Oct. 12, 2004, and entitled "TETHERED ELECTRICAL COMPONENTS FOR EYEGLASSES," which is hereby incorporated herein by reference; (iii) U.S. patent application Ser. No. 11/006,343, filed Dec. 7, 2004, and entitled "ADAPTABLE COMMUNICATION TECHNIQUES FOR ELECTRONIC DEVICES," (now U.S. Pat. No. 7,116,976) which is hereby incorporated herein by reference; (iv) U.S. patent application Ser. No. 11/078,855, filed Mar. 11, 2005, and entitled "EYEWEAR WITH RADIATION DETECTION SYSTEM," (now U.S. Pat. No. 7,500,746) which is hereby incorporated herein by reference; (v) U.S. patent application Ser. No. 11/078,857, filed Mar. 11, 2005, and entitled "RADIATION MONITORING SYSTEM," which is hereby incorporated herein by reference; (vi) U.S. patent application Ser. No. 11/183,283, filed Jul. 15, 2005, and entitled "EVENT EYEGLASSES," which is hereby incorporated herein by reference; (vii) U.S. patent application Ser. No. 11/183,262, filed Jul. 15, 2005, and entitled "EYEGLASSES WITH HEARING ENHANCED AND OTHER AUDIO SIGNAL-GENERATING CAPABILITIES," (now U.S. Pat. No. 7,760,898) which is hereby incorporated herein by reference; (viii) U.S. patent application Ser. No. 11/183,256, filed Jul. 15, 2005, and entitled "EYEGLASSES WITH ELECTRICAL COMPONENTS," (now U.S. Pat. No. 7,500,747) which is hereby incorporated herein by reference; (ix) U.S. patent application Ser. No. 11/183,263, filed Jul. 15, 2005, and entitled "EYEGLASSES WITH A CLOCK OR OTHER ELECTRICAL COMPONENT," (now U.S. Pat. No. 7,380,936) which is hereby incorporated herein by reference; (x) U.S. patent application Ser. No. 11/183,276, filed Jul. 15, 2005, and entitled "EYEGLASSES WITH ACTIVITY MONITORING," now U.S. Pat. No. 7,255,437) which is hereby incorporated herein by reference; and (xi) U.S. patent application Ser. No. 11/546,685, filed Oct. 11, 2006, and entitled "EYEGLASSES HAVING A CAMERA", (now U.S. Pat. No. 7,806,525) which is hereby incorporated herein by reference.

BACKGROUND OF THE INVENTION

Traditionally, eyeglasses have not contained or made any use of electrical components. In recent years, attempts to include electrical components within eyeglasses have had limited success. Even incorporating a small electrical component, such as a microphone, into an eyeglass frame may not be a simple task because, for example, of the necessary electrical connections with the electrical component. Clearly, larger scale electrical components would be more difficult to be provided in or attached to eyeglass frames. Many eyeglass frames tend to be very compact and lightweight and thus may not have a lot of space for electrical components. Moreover, since eyeglass frames are often fashionable items whose designs are important, there are substantial design tradeoffs involved with providing or attaching electrical components to eyeglass frames.

Even if electrical components are provided in an eyeglass frame, the ability to alter or change electrical components is problematic. Conventionally, once an eyeglass frame is manufactured, electrical components embedded in the eyeglass frame may not be removed, nor can addition electrical components be added into the eyeglass frame. Attachment of electrical components to eyeglass frames has not proven to be reliable, design friendly or commercially successful. Hence, there is a need for improved approaches to facilitate modifications or alterations to electrical components used with eyeglasses.

Typically, to participate in wireless communications, a user holds a mobile phone (e.g., wireless or a cellular phone) against his ear to hear an audio communication received in a wireless manner. The user usually also speaks towards a microphone embedded in the mobile phone to participate in the audio communication, again in a wireless manner. More recently, to facilitate hands-free operation of mobile phones, head-sets have been produced and utilized. Typically, a headset clips over or into an ear of the user to provide a speaker and a microphone in proximity to the ear and the mouth, respectively, of the user. Traditionally, the head-set was connected to the mobile phone by a cord (i.e., wire). In recent times, head-sets have been developed to operate in a wireless manner, without the need of a cord connected to the mobile phone. For example, one popular type of wireless head-set uses Bluetooth wireless transmissions to communicate between the head-set and the corresponding mobile phone.

Mobile phones often support both voice calls and text messaging. When the user does not make use of a head-set, the user often holds the mobile phone against their ear when participating in a voice call. One problem this presents is that the user is not able to see the screen of the mobile phone. As a result, the user has difficultly interacting with the keypad or screen of the mobile phone when the mobile phone is held against the user's head. Alternatively, when the user of a mobile phone makes use of a head-set, the user can receive and participate in voice calls in a hands-free manner. Unfortunately, however, the user would need to view a screen of the mobile phone to participate in text messaging.

Accordingly, there is a need for improved wireless communication techniques for users of mobile communication devices.

SUMMARY

Generally speaking, the invention pertains to techniques for providing eyewear or other head-worn personal electronic apparatus with electrical components. The electrical components can provide electrical technology to eyewear (e.g., eyeglasses) or other head-worn personal electronic apparatus without having to substantially compromise aesthetic design principles of the eyewear. The electrical components can operate independently or together with other electrical components provided elsewhere. Apparatus can also be provided to present after-market electrical components.

The electrical components can support signal capturing, signal processing, signal transmission, signal display, signal storage and/or power provision. The signals can be, for example, analog or digital signals. The electrical components can, for example, be used to provide audio output and/or audio pick-up. The electrical components may include and/or control one or more sensors to monitor and/or signal the conditions of a user of the eyewear. The electrical components may also include and/or control one or more operation indicators to signal operational status of at least some other electrical components. In addition, the electrical components can be or pertain to a circuit board or module, which includes a plurality of electrical components.

The invention can be implemented in numerous ways, including a method, system, device, apparatus, and a computer readable medium. Several embodiments of the invention are discussed below.

Other aspects and advantages of the invention will become apparent from the following detailed description taken in conjunction with the accompanying drawings which illustrate, by way of example, the principles of the invention.

BRIEF DESCRIPTION OF THE DRAWINGS

The invention will be readily understood by the following detailed description in conjunction with the accompanying drawings, wherein like reference numerals designate like structural elements, and in which:

FIG. **1** is a perspective view of a pair of glasses according to one embodiment of the invention.

FIG. **2** illustrates a diagram of a number of different embodiments of temple arrangements according to the invention.

FIG. **3**A is a diagram of a temple arrangement according to one embodiment of the invention.

FIG. **3**B is a diagram of a temple cover that at least partially covers a temple (e.g., temple and/or temple tip) according to one embodiment of the invention.

FIG. **3**C is a diagram of a fit-over temple that at least partially fits over a temple (e.g., temple and/or temple tip) according to one embodiment of the invention.

FIGS. **3**D and **3**E are diagrams of a temple arrangement according to another embodiment of the invention.

FIGS. **3**F-**3**H are diagrams of exemplary multi-part temples according to different embodiments of the invention.

FIGS. **3**I-**3**K are diagrams of exemplary rearward portions of multi-part temples according to several embodiments of the invention.

FIGS. **3**L-**3**O are diagrams of exemplary forward portions of multi-part temples according to several embodiments of the invention.

FIG. **3**P is a diagram of an eyewear products display apparatus according to one embodiment of the invention.

FIG. **4** shows examples of different electrical components according to the invention.

FIG. **5** is a chart that depicts examples of sensors suitable for use according to the invention.

FIG. **6** illustrates a diagram of a number of different embodiments of temple adapters according to the invention.

FIG. **7**A is a diagram of a temple adapter according to one embodiment of the invention.

FIG. **7**B is a diagram of a temple adapter according to another embodiment of the invention.

FIGS. **8**A and **8**B are diagrams of a temple adapter according to another embodiment of the invention.

FIG. **9**A is a diagram of a temple adapter according to one embodiment of the invention.

FIGS. **9**B and **9**C are diagrams of a temple adapter according to another embodiment of the invention.

FIG. **9**D is a diagram of a temple adapter according to still another embodiment of the invention.

FIGS. **10**A-**10**C are diagrams of a temple having a bone conducting element according to still other embodiments of the invention.

FIG. **11**A illustrates a pair of glasses according to one embodiment of the invention.

FIG. **11**B illustrates a pair of glasses according to another embodiment of the invention.

FIGS. **12**A-**12**E illustrate a side view of eyeglass frames having an extended temples according to several embodiment of the invention.

FIG. **13**A illustrates a temple having multiple parts according to one embodiment of the invention.

FIG. **13**B illustrates a portion of an eyeglass frame according to one embodiment of the invention.

FIG. **13**C illustrates a portion of an eyeglass frame according to another embodiment of the invention.

FIG. **14** is a chart that depicts examples of auxiliary sensors that can be utilized with the eyewear.

FIG. **15** shows some electrical components of a player according to an embodiment of the invention.

FIG. **16** illustrates a number of forces activating a switch according to a number of embodiments of the invention.

FIG. **17** illustrates a number of mechanical forces activating a switch according to a number of embodiments of the invention.

FIG. **18** shows a Hall-effect detector at a joint of a pair of glasses according to an embodiment of the invention.

FIGS. **19**A-**19**C illustrate different embodiments of a quadrature sensor according to the invention.

DETAILED DESCRIPTION OF EXEMPLARY EMBODIMENTS OF THE INVENTION

The invention pertains to techniques for providing eyewear or other head-worn personal electronic apparatus with electrical components. The electrical components can provide electrical technology to eyewear (e.g., eyeglasses) or other head-worn personal electronic apparatus without having to substantially compromise aesthetic design principles of the eyewear. The electrical components can operate independently or together with other electrical components provided elsewhere. Apparatus can also be provided to present after-market electrical components.

One aspect of the invention relates to temple arrangements for use with eyeglasses. According to this aspect, a temple arrangement includes one or more electrical components. The one or more electrical components are attached to or at least partially embedded in the temple arrangement.

Another aspect of the invention relates to a temple adapter for use with eyeglasses. According to this aspect, a temple adapter includes one or more electrical components that are able to be mechanically (and optionally electrically) coupled to a temple (including a temple tip) of the eyeglasses.

Still another aspect of the invention relates to one or more swappable temple portions for a pair of glasses. In one aspect, a temple has a forward portion and a rearward portion which can removably couple to one another. In one embodiment, different rearward portions can be used with the same forward portion. In other words, the different rearward portions can be swapped with one another. In one implementation, the different rearward portions can offer

different electrical components/functionalities to the pair of glasses. For example, the different rearward portions can provide different electrical components/functionalities such as: battery/power, wireless communication, radio, headset, GPS, pedometer, sun sensor, hearing enhancement, image/video capturing, etc. In another embodiment, different forward portions can be used with the same rearward portion.

The electrical components can support signal capturing, signal processing, signal transmission, signal display, signal storage and/or power provision. The signals can be, for example, analog or digital signals. The electrical components can, for example, be used to provide audio output and/or audio pick-up. The electrical components may include and/or control one or more sensors to monitor and/or signal the conditions of a user of the eyewear. The electrical components may also include and/or control one or more operation indicators to signal operational status of at least some other electrical components. In addition, the electrical components can be or pertain to a circuit board or module, which includes a plurality of electrical components.

Embodiments of different aspects of the invention are discussed below with reference to FIGS. **1-13**C. However, those skilled in the art will readily appreciate that the detailed description given herein with respect to these figures is for explanatory purposes as the invention extends beyond these limited embodiments.

FIG. **1** is a perspective view of a pair of glasses **100** according to one embodiment of the invention. The glasses **100** include a frame and a pair of lenses **102**. The frame has lens holders **104** that hold the lenses **102** in position. The frame also has a bridge **106**. The glasses **100** further include a pair of temples (or arms) **108**. The temples **108** are considered part of the frame. As shown in FIG. **1**, each of the temples **108** is coupled to one of the lens holders **104** by a hinge **109**. In one embodiment, the temples **108** can be removed from the frame (e.g., at the hinge **109**).

In addition, temple arrangements **110** are attached to the temples **108**. Here, one or both of the temples **108** can include a temple arrangement **110**. A temple arrangement **110** can include one or more electrical components **112**. In one embodiment, the temple arrangements **110** can be considered separate parts that can be attached to respective temples **108**. Once attached, the temple arrangements **110** can be considered part of, or an extension to, the temples **108**.

By having one or more electrical components **112** in one or more of the temple arrangements **110**, electrical capabilities can be provided to the glasses **100** without burdensome impact to the design of other parts of the frames. Moreover, by providing electrical components in one or more of the temple arrangements **112**, electrical capabilities can be added to eyeglasses in an after-market manner. Still further, by replacing temple arrangements, a user could alter the electrical capabilities of his eyeglasses.

In one embodiment, the glasses **100** do not have any other embedded electrical components, such as within the frame, except those in one or both of the temple arrangements **112**. In another embodiment, the glasses **100** include one or more other electrical components embedded or attached to the frame of the glasses **100** and the components are electrically coupled to the one or more electrical components **112** in one or both of the temple arrangements **110**.

In different embodiments, the glasses **100** can be, for example, a pair of sunglasses, fit-over glasses, prescription glasses, reading glasses, or safety glasses.

FIG. **2** illustrates a diagram of a number of different embodiments of temple arrangements **200** according to the invention. A temple arrangement **200** can be a temple tip, a temple fit-over, or a temple cover. In one embodiment, a temple tip is a structure that attaches to a rearward portion of a temple. In one embodiment, a temple tip can pertain to an enclosure that grabs onto a rearward portion of a temple. A temple tip is particularly common for wire frame eyeglass where the temple tip attaches to the rearward end of the temple and provides a surface suitable for positioning proximate to the user's ear. For example, FIG. **1** illustrates the temple arrangement **112** implemented as a temple tip.

In one embodiment, a temple tip is removable from its corresponding temple so that it can be replaced. The temple tip can be originally provided with the purchase of a pair of eyeglasses. Alternatively, the temple tip can be a replacement part that can be purchased separately and subsequently mounted onto a rearward portion of a temple of a pair of eyeglasses after removing any original temple tip. In another embodiment, a temple tip is permanently held onto the corresponding temple, for example, by an adhesive (e.g., epoxy, glue, etc.).

In one embodiment, a temple fit-over fits over at least a portion of the rearward end of a temple. If the rearward end of the temple has a temple tip, at least a portion of the temple tip can be fitted over by the temple fit-over. In one embodiment, a temple cover slides over and at least partially covers a portion of the rearward end of a temple. If the rearward end of the temple has a temple tip, at least a portion of the temple tip can be covered by the temple cover.

A temple cover is typically made of a material that is more flexible than a temple fit-over. For example, a temple cover can be made of a fabric or other materials, such as a sock or sleeve; while a temple fit-over can be made of plastic.

A temple arrangement **200** can be made of the same or different materials than the temple or other parts of the frame of the pair of eyeglasses. To illustrate, a pair of glasses with a metal frame can have non-metallic temple tips. A temple arrangement **200** can be of a color that is the same as, or similar to, or different from, that of the temple.

A temple arrangement **200** can be held onto a temple by frictional force. For example, if the temple arrangement **200** is a temple fit-over, it can be held onto an existing temple or temple tip by frictional force. Here, the temple fit-over is often removable. In another embodiment, the temple arrangement **200** can be permanently held onto its corresponding temple or temple tip. For example, the temple arrangement can be permanently held onto the corresponding temple or temple tip, for example, by an adhesive (e.g., epoxy, glue, etc.).

Depending on applications, a temple arrangement can be of different shapes. The shape can depend on the type of glasses. For example, a temple arrangement for fit-over glasses can be bigger than a temple arrangement for prescription glasses. The shape of the temple arrangement can also depend on applications for the electronic component(s) that are fully or partially embedded in the temple arrangement. Of course, aesthetic reasons can also influence shape (e.g., design, size, style) of a temple arrangement.

In one embodiment, the temple arrangement is a structure that has at least one electrical component attached thereto or at least partially embedded therein. In another embodiment, all of the electrical components to be provided with the temple arrangement are at least partially embedded in the temple arrangement.

FIG. **3**A is a diagram of a portion **300** of a pair of eyeglasses according to one embodiment of the invention. The portion **300** includes a temple **302** that is associated with a pair of eyeglasses. Over the end of the temple **302** that is

opposite the associated lens holder, a temple tip **304** is provided. The temple tip **304** can, for example, be held to the temple **302** by frictional forces and/or adhesive. The temple tip **304** includes at least one electrical component **306** that is at least partially embedded therein. A wide range of functionalities can be provided by the at least one electrical component **306**. The temple tip **304** can be considered separate from or part of the temple **302**. For example, when the temple tip **304** is not attached to the temple **302**, the temple tip **304** is considered a separate part. As another example, when the temple tip **304** is attached to the temple **302**, the temple tip **304** can be considered separate from or part of the temple **302**.

The temple tip **304** can be manufactured and delivered to resellers or retailers and thereafter sold attached to eyeglasses. Alternatively, the temple tip **304** can be separately provided as an optional replacement temple tip for an original temple tip. Hence, after or during purchasing a pair of eyeglasses, upgrade of the eyeglasses can be had by replacing an existing temple tip with a replacement temple tip. The colors and shapes of the temple tip **304** can vary widely. In the after-manufacturing environment, the reseller or retailer can be provided with a range of different colors and shapes so that a user can receive a replacement temple tip that reasonably matches the color and shape of the temple or that provides an altered appearance as desired by the user.

A number of embodiments have been described regarding one or more electrical components at least partially embedded in a pair of glasses. In one embodiment, one or more electrical components are at least partially embedded in a temple tip of a pair of glasses. Temple tips are relatively common for wire or metal frames which have wire or metal temples. The pair of glasses has a first and a second lens holders for receiving lenses. Each of the lens holders has a first side and a second side. The pair of glasses has a bridge element that couples the first side of the first lens holder to the second side of the second lens holder. The pair of glasses also includes a first temple and a second temple. The first temple is pivotally secured to the second side of the first lens holder through a joint, while the second temple is pivotally secured to the first side of the second lens holder through another joint. A temple typically has two ends, a first end and a second end. The first end can be the end that is pivotally secured to a lens holder through a joint, and the second end can be the other end of the temple. It is not uncommon that a temple includes a main body and an enclosure that grabs onto the main body of the temple. The second end is typically where the enclosure grabs onto the main body. The enclosure can be made of a different material than the main body of the temple. In one embodiment, such an enclosure is a temple tip, and there is an electrical component, partially or fully, embedded in the temple tip. There can also be a connector at the temple tip. In another embodiment, the temple tip can include a female connector. In still another embodiment, as a temple tip grabs onto the main body of the temple, a connector at the temple tip (such as a female connector) can make electrical contact with another connector (such as a male connector) at the main body of the temple. Typically, particularly before a pair of glasses has been extensively worn, the temple tip can be removed and re-inserted back on to the main body of the temple without much difficulty. Such a temple tip can be an after-market component, with different temple tips having different electrical components to serve different functions.

Besides a temple tip such as illustrated in FIG. **3**A, a temple tip can also be effectively modified by a fit-over temple or temple cover.

FIG. **3**B is a diagram of a temple cover **320** that at least partially covers a temple (e.g., temple and/or temple tip) according to one embodiment of the invention. As an example, the temple cover **320** can be made of a fabric or other material, such as a sock or sleeve, that slides over and at least partially covers a temple or a temple tip. The temple cover **320** can include at least one electrical component **322** that is either attached thereto or at least partially embedded therein. The temple cover **320** can also include an opening **324** so as to receive a temple or a temple tip. In one embodiment, the temple cover **320** is placed over a substantial portion of a temple tip, and the opening **324** can extend to a far end **326** so as to receive all or a substantial part of the temple tip. The temple cover **320** can, for example, be held to a temple or a temple tip by frictional forces and/or adhesive.

FIG. **3**C is a diagram of a fit-over temple **340** that at least partially fits over a temple (e.g., temple and/or temple tip) according to one embodiment of the invention. For example, the fit-over temple **340** can at least partially fit-over a temple tip. The fit-over temple **340** includes at least one electrical component **342** that is either attached thereto or at least partially embedded therein. The fit-over temple **340** can also include an opening **344** so as to receive a temple or a temple tip. The depth and/or width of the opening **344** within the fit-over temple **340** can vary depending on the extent to which it is being fit over a temple or a temple tip. The fit-over temple **340** can, for example, be held to a temple or temple tip by frictional forces and/or adhesive. As an example, the fit-over temple **340** can be plastic or other material. The colors and shapes of the fit-over temple **340** can have a lot of variations.

A wide range of functionalities can be provided by the at least one electrical component (e.g., electrical component **322** and **342**). In the after-manufacturing environment, the reseller or retailer can be provided with a range of different colors and shapes so that a user can receive a replacement temple cover or fit-over temple that reasonably matches the color and shape of the temple or that provides an altered appearance as desired by the user.

FIGS. **3**D and **3**E are diagrams of a temple arrangement **360** according to another embodiment of the invention. FIG. **3**D is a side view of the temple arrangement **360**, and FIG. **3**E is a front view of the temple arrangement **360**. In this embodiment, the temple arrangement **360** is a temple tip that can be attached to a temple (e.g., temple body) of a pair of eyeglasses. The temple arrangement **360** includes a speaker housing **362** allowing a speaker **364** to be at least partially embedded within the temple arrangement **360**. An audio sound output by the speaker **364** is coupled to an ear plug **366** by way of the speaker housing **362** and a tube **368**. Typically, the tube **368** is a flexible tube, such as a flexible plastic tube. A user of the eyeglasses having the temple arrangement **360** can place the ear plug **366** within her ear to facilitate coupling of the audio sound from the speaker **364** to the ear. The tube **368** can have a disconnection region **370** whereby at least a section of the tube **368** and the attached ear plug **366** can be removed from the temple arrangement **360**, such as when audio output is not being listened to. The tube **368** and/or the speaker housing **362** can also be capable of rotating with respect to the temple arrangement **360** to facilitate ease of use. Still further, the temple arrangement **360** can include a connector **372**, such as a male audio connector (e.g., 2.5 mm, stereo mini-phone connector). The connector **372** provides a means to electrically connect an external audio source to the speaker **364** within the temple arrangement **360**. For example, at least

one wire (not shown) that is internal to the temple arrangement **360** can be used to electrically connect the speaker **364** to the connector **372**.

In one embodiment, an electrical component is a component of an electrical circuit or system, and the electrical circuit or system is for performing at least a desired, intended or predetermined function.

In one embodiment, a temple tip, fit-over temple or temple cover according to the invention can further include a connector or cable to facilitate electrical connection with the at least one electrical component that is either attached to a temple or a temple tip or at least partially embedded therein.

Still another aspect of the invention relates to one or more swappable temple portions for a pair of glasses. According to this aspect, a temple has a forward portion and a rearward portion which can removably couple to one another. In one embodiment, different rearward portions can be used with the same forward portion. In other words, the different rearward portions can be swapped with one another. In one implementation, the different rearward portions can offer different electrical components/functionalities to the pair of glasses. For example, the different rearward portions can provide different electrical components/functionalities such as: battery/power, wireless communication, radio, headset, GPS, pedometer, sun sensor, hearing enhancement, image/video capturing, etc. In another embodiment, different forward portions can be used with the same rearward portion.

In one embodiment, only one of the temples of an eyeglass frame has swappable part(s). In another embodiment, both of the temples of an eyeglass frame have swappable part(s). Regardless, viewed in one way, each of the swappable parts at a temple can be viewed as a removable peripheral device to the eyeglass frame.

In one embodiment, a temple is a multi-part temple. The multi-part temple includes at least a forward (or first) part and a rearward (or second) part. The forward part is typically integral with or coupled to an eyeglass frame (such as at the lens holder or hinge region of an eyeglass frame). The rearward part removably connects with the forward part. The removable connection allows the rearward part to be removed for any of a variety of reasons. For example, the rearward part can be removed to: (1) connect a different rearward part; (2) connect to a peripheral bus (e.g., for data download); or (3) charge a battery (e.g., located in forward or rearward part).

The removable connection between the forward and rearward parts of the multi-part temple physically attaches and secures the rearward part to the forward part by way of at least a mechanical connection. The mechanical connection can be provided in a variety of ways, such as through use of one or more connectors, snaps, detents, bayonets, etc.

In addition, the removable connection between the forward and the rearward parts of the multi-part temple can provide (or facilitate) an electrical connection between the forward and rearward parts. In one embodiment, the forward part of the temple (or some other part of the eyeglass frame) includes one or more electrical components, and the rearward part includes one or more electrical components. In such case, the electrical connection serves to electrically connect one or more of the electrical components of the forward part (or other part of the eyeglass frame) with one or more of the electrical components of the rearward part. For example, the forward part of the temple can include one or more electronic components (e.g., integrated circuit) that are electrically connected to one or more electronic components in the rearward part.

However, in the event that all needed electrical components are within the rearward part of the multi-part temple, electrical connection between the forward part and the rearward part may not be needed. Accordingly, in some embodiments, no electrical components will be needed in the forward part; instead, all the needed electrical components will be provided in the rearward part.

Various embodiments of eyewear can utilize the multi-part temples to provided electrical components to eyeglass frames in a convenient and user-friendly manner. As one example, consider an eyeglass frame that supports a camera. The electrical components can include an image sensor, a memory, a microcontroller, and a battery. One or more of these electrical components can be in the forward part (or other part of the eyeglass frame) and the remaining one or more electrical components can be in the rearward part. For example, the image sensor and the microcontroller can be in the forward part and the battery and the memory can be in the rearward part. Additionally, if the camera makes use of a display (e.g., LCD), the display could be in either the forward part or the rearward part. The eyeglass frame might also include other electrical components for additional functionality. Examples of additional functionality include: global positioning system, antenna, user interface (e.g., buttons, switches, etc), display, microphone, earphone, etc. In another example, all of the electrical components supporting the camera functionality can be provided in the rearward part of the multi-part temple.

In one embodiment, the electrical components provided in the forward part are able to be shared with different rearward parts. In other words, different rearward parts can be swapped. For example, a different rearward part can be connected to the forward part to provide the eyeglass frame with different functionality. Examples of some of the different functionality that can be provided in this matter include: radio receiver (e.g., satellite radio), media player, pedometer, wireless communication, sun monitor, hearing enhancement, global positioning, etc. In a first example, in the case of a radio receiver, the forward part can include a display, while the rearward part can include a tuner, a rechargeable battery, an amplifier, and earphones or earphone connectors. In a second example, in the case of a media player, the forward part can include a display, while the rearward part can include a media player module, a memory, a rechargeable battery, a switch and earphones or earphone connectors. In a third example, in the case of a pedometer, the forward part can include a display, while the rearward part can include an accelerometer, a rechargeable battery, a memory and a microcontroller. In a fourth example, in the case of a wireless communication device, the forward part can include a display, while the rearward part can include a battery, an antenna, a wireless module, earphones or earphone connectors, and a user interface. The user interface, for example, can include buttons, which, for example, can facilitate user input with respect to on/off, volume, and accept or decline call. In this case, information displayed can include battery status, device status, caller ID, etc. In these four examples, the forward part includes a display and thus the forward part can be used (i.e., shared) with any of the different rearward parts to thereby provide different functionality to the eyeglass frames. Hence, by swapping one of these different rearward parts, the same pair of eyeglasses can provide different functionality.

A multi-part temple can be manufactured and delivered to resellers or retailers and thereafter sold attached to eyeglasses. Alternatively, a rearward part can be separately provided as a separate part or as an optional rearward part

that can be swapped with an original rearward part. Hence, after or during purchasing a pair of eyeglasses, alteration, upgrade or conversion of the eyeglasses can be had by swapping in another rearward part. The electrical components or functions supported by the rearward part can vary widely. The colors and shapes of the rearward parts also can vary widely. For example, in the retailing or after manufacturing environment, the reseller or retailer can be provided with a range of different colors and shapes so that a user can receive a rearward part that reasonably matches the color and shape of the multi-part temple or that provides an altered appearance as desired by the user.

FIG. **3**F is a diagram of a multi-part temple **1300** according to one embodiment of the invention. The multi-part temple **1300** has a forward part **1302** and a rearward part **1304**. The rearward part **1304** is removably connected to the forward part **1302** such that the rearward part **1304** is removable. Once removed, the same rearward part or a different rearward part can be later connected to the forward part **1302**. Alternatively, a cable can be connected to the forward part **1302** when the rearward part **1304** is removed. The cable can facilitate data transfer, battery charging, etc., depending on the electrical components in the forward part **1302**.

FIG. **3**G is a diagram of a multi-part temple **1310** according to one embodiment of the invention. The multi-part temple **1310** can represent the multi-part temple **1300** shown in FIG. **1** in one embodiment. In FIG. **3**G, a forward part **1312** and a rearward part **1314** are shown disconnected. The forward part **1312** has a mechanical element **1316** and the rearward part **1314** has a corresponding opening **1318**. Once connected together, the mechanical element **1316** of the forward part **1312** is inserted into the opening **1318**, thereby mechanically coupling the rearward part **1314** to the forward part **1312**. Once mechanically coupled the rearward part **1314** is secured to the forward part **1312**, but remains removable.

FIG. **3**H is a diagram of a multi-part temple **1320** according to one embodiment of the invention. The multi-part temple **1320** can represent the multi-part temple **1300** shown in FIG. **1** in one embodiment. In FIG. **3**H, a forward part **1322** and a rearward part **1324** are shown disconnected. The forward part **1322** has a connector **1326** and the rearward part **1324** has a corresponding connector **1328** embedded therein. Once connected together, the connector **1326** of the forward part **1322** is inserted into the corresponding connector **1328**, thereby mechanically coupling the rearward part **1324** to the forward part **1322**. Once mechanically coupled the rearward part **1324** is secured to the forward part **1322**, but remains removable. Additionally, the connection of the connector **1326** and the corresponding connector **1328** can also provide an electrical connection. An electrical connection would serve to enable electrical components in the forward part **1322** (or other parts of an eyeglass frame) to electrically connect to electrical components in the rearward part **1324**. For example, the electrical connection can provide electrical connections for one or more electrical wires. An example of one suitable type of connector is a USB connector which can provide mechanical and electrical connection.

As noted above, a rearward part of a multi-part temple can include one or more electrical components. FIG. **3**I is a diagram of a rearward part **1330** of a multi-part temple according to one embodiment of the invention. The rearward part **1330** has a body **1332** with electrical circuitry **1334** internal to the body **1332**. As one example, the electrical circuitry **1334** can pertain to data storage (e.g., memory). In such an example, the rearward part **1330** can be considered a memory stick or a memory card. As other examples, the electrical circuitry **1334** can pertain to a battery/power source, a sun sensor, a pedometer, a media player, a wireless module, etc.

FIG. **3**J is a diagram of a rearward part **1340** of a multi-part temple according to another embodiment of the invention. The rearward part **1340** has a body **1342** with an ear bud **1344** and an ear bud arm **1346** extending therefrom. In addition, the body **1342** includes at least one conductor **1347** and electrical circuitry **1348** internal to the body **1342**. The at least one conductor **1347** can electrically connect the electrical circuitry **1348** with the ear bud **1344**, where the at least one conductor **1347** extends through the ear bud arm **1346** to the ear bud **1344**. Optionally, the body **1342** can further include an antenna **1349** internal to the body **1342**. In the case where the electrical circuitry **1348** includes a wireless receiver (e.g., Bluetooth, XM, FM), the antenna **1349** can enhance reception. As an example, the electrical circuitry **1348**, can be a wireless module for wireless communications or a receiver for XM or FM signals. Additionally or alternatively, the electrical circuitry **1348** can, for example, pertain to one or more of a data storage device, battery/power source, a sun sensor, a pedometer, a media player, etc.

FIG. **3**K is a diagram of a rearward part **1350** of a multi-part temple according to another embodiment of the invention. The rearward part **1330** has a body **1352** with a printed circuit board **1354** internal to the body **1352**. A display device **1356** (e.g., LCD) can be provided on the body **1352**. In one example, the display device **1356** can be mounted to the circuit board **1354** and exposed through an opening in the body **1352** so as to be visible by a user of the eyeglasses using the multi-part temple. Optionally, at least a portion of the printed circuit board **1354** can conform to the shape of the body **1352**. The ability to conform, even partially, allows the printed circuit board **1354** to yield greater surface area within a temple, which tends to be small and stylized. The integrated circuit board **1354** can have one or more electronic components (e.g., integrated circuits) mounted thereon.

FIGS. **3**L-**3**O are diagrams of representative forward parts for multi-part temples according to different embodiments of the invention. FIG. **3**L is a diagram of an exemplary forward part **1360** having a mechanical element **1362** that includes one or more detents **1364**. When a rearward part is connected to the forward part **1360**, the mechanical element **1362** is inserted into an opening (e.g., opening **1318**) and held securely in place by mechanical forces facilitated by the mechanical element **1362** and the detents **1364**. This can be accomplished through different methods, such as with corresponding protruding portions in the opening that can, for example, be aligned with the detents **1364**. For example, the protruding portions can snap into place or biased by springs (e.g., spring-loaded).

FIG. **3**M is a diagram of an exemplary forward part **1370** having a mechanical element **1372** that includes one or more protrusions **1374**. When a rearward part is connected to the forward part **1370**, the mechanical element **1372** is inserted into an opening (e.g., opening **1318**) and held securely in place by mechanical forces facilitated by the mechanical element **1372** and the protrusions **1374**. In one embodiment, the protrusions **1374** are spring-loaded to facilitate connection with the opening.

FIG. **3**N is a diagram of an exemplary forward part **1380** having a mechanical element **1382** that includes one or more bayonet structures **1384**. To connect a rearward part to the

forward part **1380**, the mechanical element **1382** is inserted into an opening (e.g., opening **1318**) that has groves (in the direction substantially parallel to the axis of the mechanical element **1382**) for receiving the bayonet structures **1384**. The rearward part can be connected with the forward part **1380** when the groves within the opening of the rearward part are aligned with the bayonet structures **1384**. Once the mechanical element **1382** is so inserted, the rearward part can be rotated with respect to the forward part **1380**. The rotation causes the bayonet structures **1384** to no longer be aligned with the grooves. As a result, the rearward part is mechanically secured to the forward part **1380** (and thus the eyeglass frame) in a bayonet like manner.

In one embodiment, a connector is used to removably couple the rearward portion to the forward portion of a multi-part temple. For example, the connector can be standard connector. One example of a suitable connector is a Universal Serial Bus (USB) connector.

FIG. **3**O is a diagram of an exemplary forward part **1390** having an electrical connector **1392**. The connector **1392** facilitates mechanical and/or electrical connections between the forward part **1390** and a rearward part. When a rearward part is connected to the forward part **1390**, the connector **1392** is inserted into an opening (e.g., opening **1328**) and held securely in place by mechanical forces. There can be additional mechanical connecting mechanisms to further secure the connection.

In one embodiment, the opening receiving the connector **1392** can include a corresponding (i.e., counterpart) connector. When the connector **1392** is connected with the corresponding connector within the opening, the rearward part is physically secured to the forward part **1390**. For example, mechanical forces can hold the connector **1392** and the corresponding connector in a connected position. In addition, when the connector **1392** and the corresponding counterpart connector are coupled together, one or more electrical connections are facilitated. For example, each connector can be coupled to one or more electrical wires at the other connector so that wires from one part are able to be connected to corresponding wires on the other part. As a result, electrical component(s) in the rearward part are able to be electrically connected with electrical component(s) in the forward part **1390** (or elsewhere in the eyeglass frame). In one implementation, the connectors pertain to or resemble a Universal Serial Bus (USB) type connector.

In another embodiment, the opening receiving the connector **1392** does include a corresponding counterpart connector. In this embodiment, mechanical forces can hold the connector **1392** within the opening. Also, in this embodiment, electrical connections are not facilitated.

Although FIGS. **3**G-**3**N pertain to connections having a male connector at the forward part and a female connector at the rearward part, it should be understood that alternatively the male connector can be at the rearward part and the female connector can be at the forward part.

Also, although FIGS. **3**G-**3**N pertain to connections showing only one elongated portion (like a male connector) to be received by an opening (like a female connector), in other embodiments, there can be more than one elongated portion to be received by more than one opening. Also, the connections can be formed on the sides (i.e., outer surface), instead of by having elongated portions and openings positioned in the middle of (i.e., internal to) the forward and rearward parts. For example, there can be two prongs, one on the top surface and one on the bottom surface of a forward part. Each prong can be received by a counterpart detent in a rearward part, such as the prong on the top surface of the forward part to be received by a detent on the top surface of the rearward part.

In a number of embodiments, the forward part of the multi-part temple is substantially smaller than the rearward part. For example, in FIG. **3**F, the forward part **1302** is substantially smaller than the rearward part **1304**. In one embodiment, a forward part is large enough to house a connection mechanism used to couple with a rearward part and not too much larger. In another embodiment, a forward part and a rearward part are about the same size. In still another embodiment, a forward part is larger than a rearward part.

In one embodiment, neither the forward part nor the rearward part of a multi-part temple contains any electrical components. In such case, the rearward part can still be removable from the forward part. Such an embodiment enables a user to swap one (which can be substantially all of the temple) or both the rearward portions of both temples, with another rearward portion(s), such as for aesthetic, configuration or design reasons.

In one implementation, a connector is used to removably couple the rearward portion to the forward portion of the multi-part temple. For example, the connector can be a Universal Serial Bus (USB) connector.

In one embodiment, a forward part can be part of or integral with a corresponding region of a lens holder. In such case, there need not be any hinges for coupling the temples to the lens holders.

As noted above, connectors can be use to removably attach a temple to an eyeglass frame (e.g., lens holder) or to removably attach different portion(s) of a temple. These connectors can be provided for one or both temples of the eyeglass frames. With such temples being easily removable by users without the need for any special skill or tools, the temple parts can be interchangeable and can be separately sold or leased.

Further, to display various eyewear products, such as in a retail environment, an eyewear products display apparatus (e.g., stand) can include corresponding connectors or connector structures so that (i) separate temples (ii) separate parts of temples and/or (iii) eyeglass frames without temples can be connected to the eyewear products display apparatus for display. For example, if the eyewear products (e.g., frames, temples, etc.) use connectors, then the eyewear products display apparatus can support those same connectors (e.g., USB connectors) or compatible structures. This eyewear products display apparatus opens up new ways to organize and present eyewear products at retail stores. It also allows users to separately select a base eyewear frame and temples to be used therewith. The temples and the frames can be displayed detached from one another, such that a user can separately select and try different temples with frames.

FIG. **3**P is a diagram of an eyewear products display apparatus **1400** according to one embodiment of the invention. The apparatus **1400** has a first region **1404** of first type connectors (or compatible protrusions) integral with the apparatus **1400**. A plurality of eyeglass frames having second type connectors can be attached and displayed on the apparatus **1400** by connecting one or two of the second type connector of the eyeglass frames to those of the first type connectors of the first region of the apparatus **1400**.

The apparatus **1400** also can include a second region **1402** of second type connectors (or compatible openings) integral with the apparatus **1400**. A plurality of removable temples (and/or removable temple parts) having first type connectors can be attached and displayed on the apparatus **1400** by connecting the first type connectors of the removable

temples (and/or removable temple parts) to those of the second type connectors (or compatible openings) in the second region **1402** of the apparatus **1400**.

In one embodiment, the first type connectors are male connectors and the second type connectors are corresponding female connectors which provide a secure mechanical connection. In one embodiment, the first type connectors and/or the second type connectors provided integral with the apparatus **1400** are not electrical connectors but compatible structures (e.g., protrusions and openings) such that a secure mechanical connect can be had.

In one embodiment, the orientation of at least some of the connectors in the apparatus **1400** is substantially horizontal. In other words, for example, when a rearward part of a temple is inserted into such a connector in the apparatus **1400**, the rearward part is substantially perpendicular to the surface of the apparatus **1400** as shown. In another embodiment, the orientation of at least some of the connectors in the apparatus **1400** is substantially facing upward or downward in a vertical manner. In other words, for example, when a rearward part of a temple is inserted into such a connector in the apparatus **1400**, the rearward part is substantially parallel to the surface of the apparatus **1400** as shown. In yet another embodiment, the orientation is at an acute angle relative to the surface of the apparatus **1400** as shown. In other words, for example, when a rearward part of a temple is inserted into a connector in the apparatus **1400**, the rearward part is at an acute angle relative to the surface of the apparatus **1440** as shown. The connectors in the apparatus **1400** can also be rotatable or movable, such as between different positions and/or angles.

Although FIG. **3**P only depicts one side of the eyewear products display apparatus **1400**, the apparatus can have other like sides. For example, the apparatus **1400** can be a one, two, three or four sided apparatus.

In still another embodiment, at least one connector of the apparatus **1400** is connected to at least one electrical component in the apparatus **1400**. For example, when a selected temple part is connected to the connector, the at least one electrical component in the apparatus **1400** is electrically connected to an electrical component in the temple part, and together can perform an electrical operation.

In yet another embodiment, at least one connector of the apparatus **1400** is connected to another connector of the apparatus **1400**. This allows electrical connection between the different eyewear parts connected to the apparatus **1400**. For example, when a selected temple part is connected to the connector and an eyeglass frame is connected to the other connector, an electrical component within the eyeglass frame is electrically connected to an electrical component in the temple part, and together can perform an electrical operation.

FIG. **4** shows examples of different electrical components according to the present invention. Different embodiments of temple arrangements, temple adapters or temple parts according to the invention can use one or more of these different electrical components.

In one embodiment, the electrical component is an electrical connector. The connector can be a male connector or a female connector. Examples of different types of connectors have previously been described in the related patent applications, which have been incorporated by reference.

In one embodiment, the embedded electrical component is an electrical switch, such as one or more of those previously described in the related patent applications, which have been incorporated by reference.

In one embodiment, one electrical component can be a power source. The power source can be a battery, a solar cell or other type of power source.

In one embodiment, one electrical component can include a circuit board. The circuit board can be a rigid or a flexible circuit board.

In one embodiment, one electrical component can be an indicator. The indicator can be audio, visual, or physical (e.g., vibration). For example, the indicator can signal an event or condition to a user of the glasses.

In one embodiment, one electrical component can be a display, such as an LCD display.

In one embodiment, one electrical component can be a speaker. The speaker can provide an audio output for the benefit of the wearer of the glasses. The speaker can directly transmit sound to a user, such as a speaker mounted on an exterior surface of an eyeglass frame, or partially or fully embedded in an eyeglass frame, or a bone conducting type of speaker. Alternatively, the speaker can indirectly transmit sound to a user, such as through the use of a tube to deliver audio output proximate to a user's ear.

In one embodiment, one electrical component can be a controller. The controller can, for example, be a microprocessor.

In one embodiment, one electrical component can be a memory device. The memory device can be non-volatile memory, such as FLASH memory. The data stored in the memory device can be user data or data provided by other electrical components.

In one embodiment, one electrical component is a frequency receiver or a frequency transmitter. They can be in the radio frequency range.

In one embodiment, one electrical component can be a sensor. The sensor can be a temperature sensor. The temperature sensor can be used to sense the temperature of the wearer. In one embodiment, such a temperature sensor is in a temple tip. In measuring the temperature, the user can further press the temple tip towards his head to ensure better connection. One can also put the temple under one's tongue to measure body temperature.

In other different embodiments, one electrical component can be a motion detector, a speed sensor, a rate of ascent (or descent) detector, a pressure detector, or a detector for radiation, such as an ultraviolet (UV) detector.

In one embodiment, one electrical component is a radio frequency identification (RFID) tag. A RFID tag typically includes a memory chip and a radio antenna. The memory chip usually has a small storage capacity and thus does not include a large amount of information. A portion of such information can provide identifying information for the glasses. The memory chip may only have a few kilobytes, sufficient to encode information, such as a serial number, where and when the product (such as eyeglasses) was manufactured, and other relevant information.

The RFID tags can come in a number of configurations. For example, an active tag uses a battery-powered transponder to constantly emit signals which can carry information programmed into the memory chip. Active tags are more applicable to situations where readers are not close to the tags. A semi-passive tag likewise has a battery, but may not be activated until it receives a signal from a reader. They are more applicable to situations that do not need continuous connection and accessing. A passive tag has no battery; its antenna extracts power from a reader's radio wave signal to transmit the identifying information. Passive tags are typically relatively inexpensive, but may have to be within a few

feet of a reader to extract power. The electrical component can be a passive RFID tag, or some other type of tag.

In one embodiment, one electrical component can be for locating the corresponding glasses. For example, the electrical component can produce a beeping tone when it receives a specific radio signal. A handheld device (such as a key chain accessory, can generate the specific radio signal (e.g., when a button is pushed). Through the beeping tone, one can locate the glasses.

As noted above, in one embodiment, the electrical component can be a sensor. More generally, a pair of glasses can include one or more sensors that can be used individually or in combination. FIG. **5** is a chart **500** that depicts examples of sensors suitable for use in or attached to the glasses.

In one embodiment, the sensor is a "being worn" sensor. The "being worn" sensor indicates whether the glasses are being worn by its user. The "being worn" operation can be performed using, for example, a thermal sensor, a motion detector, a stress sensor or a switch.

In one embodiment, a motion detector is used as a "being worn" sensor. A threshold can be set, such that if the amount of motion exceeds the threshold, the glasses are assumed to be worn. The motion detector can, for example, be achieved by a mechanical mechanism or an accelerometer.

In another embodiment, the "being worn" sensor includes two thermal sensors. One sensor can be at approximately the middle of a temple, such as in a region that touches the head of the user wearing the glasses. The other sensor can be at one end of the temple, the end that is close to its hinge. If the temperature differential between the two sensors is beyond a certain preset value, the glasses would be assumed to be worn. The differential is presumed to be caused by a person wearing the pair of glasses.

In yet another embodiment, the "being worn" sensor includes a stress sensor at the hinge of the temple. The assumption is that when the eyewear is worn, the hinge is typically slightly stretched because typically, the width of the head of the user is slightly wider than the width between the temples when the two temples are in the extended positions. If the value of the stress sensor is beyond a certain preset value, the glasses would be assumed to be worn.

In a further embodiment, the "being worn" sensor can be a switch. For example, at the hinge between a temple and its corresponding lens holder, there is a switch. When that temple is in its extended position, i.e., fully extended outwards, the switch is turned on. The switch can be a pin-type switch. When the temple is fully extended outwards, the pin is pressed. When both temples are fully extended outwards, in one embodiment, the glasses would be assumed to be worn by the user.

In one embodiment, another type of sensor is an environmental sensor. The environmental sensor can sense environmental conditions, such as one or more of radiation (e.g., ultraviolet radiation or light), temperature (e.g., ambient temperature), pressure, humidity and toxins (e.g., chemicals, etc.).

In another embodiment, another type of sensor is a condition sensor. The condition sensor can sense the conditions of the user of the glasses. Examples of condition sensors include sensing one or more of distance traveled, location, speed, calories consumed, temperature and vital signs associated with the user of the glasses. The distance traveled could represent the horizontal distance traveled or the vertical distance (i.e., elevation) traveled. The speed can be the rate of movement along the horizontal distance traveled and/or the vertical distance. In yet another embodiment, the condition sensor can indirectly sense emotional conditions of the user of the glasses.

The sensors can be provided in a redundant or fault-tolerant manner. For example, sensors can come in pairs in the glasses. When one malfunctions, the other one will take over its operation. In another embodiment, the sensor information can be processed in a differential manner to examine changes to the sensor information. The differential can be based on time. The sensors can be powered by a battery, solar energy, or kinetic energy. For reduced power consumption, the sensors can remain in a low-power state unless data is being acquired by the sensors. In yet another embodiment, two or more of the sensors can communicate with one another (wired or wirelessly) to exchange data or control information.

FIG. **6** illustrates a diagram of a number of different embodiments of temple adapters **600** according to the invention. The temple adapters **600** serve to adapt a temple (i.e., a temple body or temple tip) of a pair of eyeglasses to provide for at least one electrical component. In one embodiment, a temple adapter can clip onto a temple body or a temple tip. In another embodiment, a temple adapter can mount to a post provided on a temple body or a temple tip. In still another embodiment, a temple adapter can mount to a hole provided in a temple body or a temple tip. In yet another embodiment, a temple adapter can be bonded (or adhered) to a temple body or a temple tip.

The temple adapter is particularly well suited to adapt a pair of eyeglasses with communication components, such as a speaker and/or a microphone. As an example, a standard pair of eyeglasses can be transformed into an operational headset by attaching a temple adapter to a temple body or temple tip of the pair of eyeglasses, wherein the temple adapter includes at least one speaker and at least one microphone.

The temple adapter can be rigid or malleable. The benefit of being malleable is that the particular geometric arrangement/assembly of the temple adapter can be altered by its user for better user comfort or operation.

In one embodiment, the temple adapter is a structure that has at least one electrical component attached thereto or at least partially embedded therein. In another embodiment, all of the electrical components to be provided with the temple adapter are at least partially embedded in the temple adapter.

FIG. **7**A is a diagram of a temple adapter **700** according to one embodiment of the invention. The temple adapter **700** attaches to a temple **702** (including any temple tip using a clip **704**. The clip **704** can use force, such as an interference fit force or spring-induced force, to attach the temple adapter **700** to the temple **702**. Besides the clip **704**, the temple adapter **700** includes an angled arm **706** and an ear bud **708**. The angled arm **706** can be malleable. When a pair of eyeglasses associated with the temple **702** is being worn by a user, the ear bud **708** can be placed in or near the user's ear canal. The ear bud **708** contains a speaker and receives electrical signals via a wire, such wire can be provided internal or external to the temple adapter **700** and can originate at the temple **702** or external to the temple **702**.

FIG. **7**B is a diagram of a temple adapter **720** according to another embodiment of the invention. The temple adapter **720** attaches to a temple **722** (including any temple tip) using a clip **724**. The clip **724** can use force, such as an interference fit force or spring-induced force, to hold the temple adapter **720** to the temple **722**. Besides the clip **724**, the temple adapter **720** includes an angled arm **726**, an ear bud **728**, a microphone **730**, an extension arm **732** and a cord **734**. In this embodiment, the cord **734** includes a wire that

connects to the speaker within the ear bud **728** and another wire that connects to the microphone **730**. There can be one or more conductors inside a given wire. For example, a wire might have one conductor serving as a signal line and another conductor serving as ground. Such wires can be provided internal to the extension arm **732** and the angled arm **726**. The arm **732** can serve to guide the cord **734** away from the user's ear or rearward. The angled arm **726** can be malleable. The placement or position of the microphone **730** can vary with implementation. As shown in FIG. **7**B, the microphone **730** is directed forward to a user's front when a pair of eyeglasses associated with the temple **722** are being worn. Alternatively, the microphone **730** could be directed outward away from the user's head when the pair of eyeglasses are being worn. When a pair of eyeglasses associated with the temple **722** is being worn by a user, the ear bud **728** can be placed in or near the user's ear canal. The ear bud **728** contains a speaker and receives electrical signals via a wire of the cord **734**. The cord **734** can have another end (not shown) with a connector for coupling with an audio output device (e.g., radio, MP3 player) or a communication device (e.g., mobile phone).

FIGS. **8**A and **8**B are diagrams of a temple adapter **800** according to another embodiment of the invention. FIG. **8**A is a side view of the temple adapter **800**, and FIG. **8**B is a front view of the temple adapter **800**. The temple adapter **800** has a support body **802** which has a support arm **803**. An ear bud **804** is attached to an end of the support arm **803**. A connector **806**, such as a male audio connector, is attached to one end of the support body **802**. A microphone **808** can be optionally provided and attached to the support body **802** or the support arm **803**. Additionally, an elastic member **810** can be provided to facilitate attachment of the support body **802** to a temple **812** of a pair of eyeglasses. The temple **812** can have a tip region **814**, which can be referred to as a temple tip. When the temple adapter **800** is attached to the tip region **814** of the temple **812**, the tip region **814** is placed in or through an opening **816** in the elastic member **810**, as shown, for example, in FIG. **8**B. The temple adapter **800** is thereby held in place relative to the tip region **814**. Additionally, although not shown, the support body **802** would carry a first internal wire from the connector **806** to the microphone **808**, and the support body **802** and the support arm **803** would carry a second internal wire from the connector **806** to the ear bud **804**.

FIG. **9**A is a diagram of a temple adapter **900** according to another embodiment of the invention. In FIG. **9**A, a side-view of the temple adapter **900** is depicted. The temple adapter **900** attaches to a temple **902** of a pair of eyeglasses. The temple **902** can have a tip region **904**, which can be referred to as a temple tip. The temple adapter **900** has a support member **906**. A first end **908** of the support member **906** couples to the temple **902** of a pair of eyeglasses. In one embodiment, the first end **908** serves to attach the temple adapter **900** to the temple **902**. For example, the first end **908** can provide a clip, clamp, post, or hole to provide or assist with the attachment. As another example, the first end **908** can alternatively or additionally use an adhesive, bonding or fastener (e.g., hook and loop system, such as Velcro) to provide or assist with the attachment. A second end **910** of the support member **906** provides an opening through which an arm **912** extends. One end of the arm **912** has an ear bud **914** attached thereto. The arm **912** can be angled and/or malleable. When a pair of eyeglasses associated with the temple **902** is being worn by a user, the ear bud **914** can be placed in or near the user's ear canal. The ear bud **914** contains a speaker and receives electrical signals via a wire, such wire can be provided internal or external to the temple adapter **900** and can originate at the temple **902** or external to the temple **902**.

FIGS. **9**B and **9**C are diagrams of a temple adapter **920** according to still another embodiment of the invention. FIG. **9**B is a side view of the temple adapter **920**, and FIG. **9**C is a front view of the temple adapter **920**. The temple adapter **920** attaches to a temple **922** of a pair of eyeglasses. The temple **922** can have a tip region **924**, which can be referred to as a temple tip. The temple adapter **920** has a support member **926**. A first end **928** of the support member **926** couples to the temple **922** of a pair of eyeglasses. In one embodiment, the first end **928** serves to attach the temple adapter **920** to the temple **922**. For example, the first end **928** can provide a clip, clamp, post, or hole to provide or assist with the attachment. As another example, the first end **928** can alternatively or additionally use an adhesive, bonding or fastener (e.g., hook and loop system, e.g., Velcro) to provide or assist with the attachment. The first end **928** also has a bracket **930** having a connector **932** at one end, and an elastic member **934** for coupling about the tip region **924**. The connector **932**, such as a male audio connector, is attached to one end of the bracket **930**. A microphone **936** can be optionally provided and, for example, attached to the support body **926**.

A second end **938** of the support member **926** provides an opening through which an arm **940** extends. One end of the arm **940** has an ear bud **942** attached thereto. The arm **940** can be angled and/or malleable. The arm **940** is also repositionable within the opening at the second end **938** so as to permit user adjustment. When a pair of eyeglasses associated with the temple **922** is being worn by a user, the ear bud **942** can be placed in or near the user's ear canal. The ear bud **942** contains a speaker and receives electrical signals via a wire, such wire can be provided internal or external to the temple adapter **920** and can originate at the temple **902** or external to the temple **902**. In this embodiment, a wire **944** is shown as passing through the arm **940** to provide signals to the speaker within the ear bud **942**. More particularly, in one embodiment, although not shown in FIGS. **9**B and **9**C, a first wire would connect the speaker within the ear bud **942** to the connector **932** (e.g., wire **944**), and a second wire would connect the microphone **936** to the connector **932**. Such wires can be internal or external, or partially internal and partially external, to the temple adapter **920**.

FIG. **9**D is a diagram of a temple adapter **960** according to still another embodiment of the invention. In FIG. **9**D, a side-view of the temple adapter **960** is depicted. The temple adapter **960** attaches to a temple **962** of a pair of eyeglasses. The temple **962** can have a tip region **964**, which can be referred to as a temple tip. The temple adapter **900** has a support member **966**. A first end **968** of the support member **966** couples to the temple **962** of a pair of eyeglasses. In one embodiment, the first end **968** serves to attach the temple adapter **960** to the temple **962**. For example, the first end **968** can provide a clip, clamp, post, or hole to provide or assist with the attachment. As another example, the first end **968** can alternatively or additionally use an adhesive, bonding or fastener (e.g., hook and loop system, e.g., Velcro) to provide or assist with the attachment. A second end **970** of the support member **906** provides an opening through which an arm **972** extends. One end of the arm **972** has an ear bud **974** attached thereto. The arm **972** can be angled and/or malleable. When a pair of eyeglasses associated with the temple **962** is being worn by a user, the ear bud **974** can be placed in or near the user's ear canal. The ear bud **974** contains a speaker and receives electrical signals via a wire, such wire

can be provided internal or external to the temple adapter **960** and can originate at the temple **962** or external to the temple **962**. Further, the temple adapter **960** can include a microphone **976**. In this embodiment, the microphone **976** is attached to the support member **966**. In addition, an arm **978** is used to support an end of a cable **980** that is coupled to the arm **978**. The cable **980** can include at least one wire for the microphone **976** and one wire for the speaker within the ear bud **974**.

To the extent that any of the embodiments of the temple adapters discussed above use a microphone, a tube can be optionally attached to the microphone to facilitate voice pick-up of the user. One end of the tube can be placed over the microphone, and the other end of the tube is then positioned closer to the user's mouth than is the microphone. With a temple adapter on both temples, each providing a microphone and speaker to a pair of eyeglasses, only one temple adapter would typically make use of such a tube. Alternatively, the tube and the microphone could be replaced by a boom microphone.

FIG. **10**A-**10**C are diagrams of a temple having a bone conducting element according to still other embodiments of the invention. The bone conducting elements can replace a traditional speaker to provide audio output to a user. Although not shown, electrical signals would be internally or externally supplied to the bone conducting element.

FIG. **10**A illustrates a temple **1000** for a pair of eyeglasses. The temple **1000** includes a bone conducting element **1002** that can provide audio sound to a user by coupling vibrations to at least one bone of the user's face. The bone conducting element **1002** is held relative to the temple **1000** by an arm **1004**. Hence, in this embodiment, the temple **1000**, the arm **1004** and the bone conducting element **1002** can all be integrally formed.

FIG. **10**B illustrates a temple **1020** for a pair of eyeglasses. The temple **1020** includes a bone conducting element **1022** that can provide audio sound to a user by coupling vibrations to at least one bone of the user's face. The bone conducting element **1022** is held relative to the temple **1020** by a support **1024** that removably attaches to the temple **1020**.

FIG. **10**C illustrates a temple **1040** for a pair of eyeglasses. The temple **1040** includes a bone conducting element **1042** that can provide audio sound to a user by coupling vibrations to at least one bone of the user's head. In this embodiment, the bone conducting element **1042** is positioned in the vicinity of the user's ear, such as behind the user's ear. The placement of the bone conducting element **1042** in this embodiment can reduce impact to the design of the eyeglasses.

In one embodiment, the electrical components associated with a temple arrangement, a temple adapter or a removable temple part is for enhancing the hearing of the person wearing the corresponding pair of glasses. There can be at least a microphone and a speaker in a temple arrangement, a temple adapter or removable temple part. The microphone can be close to an ear of the user when the glasses are worn by the user, and can be a directional microphone. The microphones can be a microphone in a temple adapter, such as the microphone **730** in FIG. **7**B, **808** in FIG. **8**A, **936** in FIG. **9**B, or **976** in FIG. **9**D. The microphones can be in a temple arrangement. The microphone in a temple arrangement can be attached to a temple tip, a temple fit-over or a temple cover. The microphones can be positioned to be in front of the user's ears so that the microphones will not be affected by the shadowing effect of the ears. The speaker can be inserted into the ear, as in some of the speakers previously described.

In another embodiment, there are two sets of microphones and speakers, such as in two temple arrangements, temple adapters or removable temple part. In the vicinity of each ear, there is a temple arrangement, temple adapter or removable temple part with its corresponding microphone and speaker. The microphones again can be directional, one pointing generally outwards in a position close to the left ear, and one pointing generally outwards in a position close to the right ear. Alternatively, the microphones can point forward.

The microphone and the speaker close to an ear do not have to be in very close proximity to each other, as in many hearing aids existing nowadays. They can be spaced apart by, such as, one to several inches, with the microphone being directional and pointing to the front and to either the left or the right of the user, and with the speaker pointing toward or inserted into the corresponding ear of the user. Such a distance apart can significantly reduce feedback effect of existing hearing aids. Another advantage of such a hearing enhancement device is that users may not need to be fitted into ears with ear molds. In any case, additional details on hearing enhancement are further described in the related applications that have been incorporated herein by reference, such as U.S. Provisional Patent Application No. 60/620,238, filed Oct. 18, 2004, and entitled "EYEGLASSES WITH HEARING ENHANCED AND OTHER AUDIO SIGNAL-GENERATING CAPABILITIES."

The various embodiments of the invention noted above, whether temple arrangement, temple adapter or removable temple part, can have a cable or cord attached or attachable thereto. The cable or cord has one or more conductors. The cable or cord can serve to provide electrical signals to or receive electrical signals from the temple arrangement, the temple adapter or removable temple part. In one embodiment, one end of a cable or cord attaches to a temple arrangement, temple adapter or removable temple part (either permanently or via a connector) and the other end of the cable or cord attaches (either permanently or via a connector) to an electronic device. As an example, the electronic device can be an audio output device (e.g., audio player) or a communication device (e.g., mobile telephone). In a first example, the cable or cord could provide a male audio (stereo) connector at one end, and a pair of female audio connectors at the opposite end, each being for use with a different temple. In a second example, the cable or cord could provide a set of connectors, such as a male mini-phone connector (2.5 mm) and a male audio (stereo) connector, at one end, and one or a pair of female phone connectors at the opposite end.

In one embodiment, the cable or cord can also have a switch coupled thereto so as to permit a user to switch modes. For example, if the temple arrangement, temple adapter or removable temple part provides a speaker and microphone to a pair of eyeglasses, a switch on a cable or cord that connects the temple arrangement or temple adapter to an electronic device could provide different switch positions for different electronic devices or different functional modes of operation of a single electronic device. As an example, if the electronic device is (or operates as) an audio player, a first switch position could be used. Alternatively, if the electronic device is (or operates as) a mobile telephone, a second switch position could be used. Additional discus-

sion of suitable cables and cords is provided in the related applications that have been incorporated herein by reference.

Electrical components can form an electronic module. The electronic module can provide radiation monitoring, wireless communication, enhanced hearing, etc. A radiation monitoring system can be partially or fully contained in a temple arrangement, temple adapter or removable temple part associated with a temple of a pair of glasses. Typically, the temple arrangement or temple adapter can be removable from the temple. The removable temple part is obviously removable from a corresponding remaining temple part.

In another embodiment, an electronic component in a temple arrangement, temple adapter or removable temple part interacts with another electronic component in another part (e.g., frame) of the glasses or in a device tethered to the glasses. For example, a temple of a pair of glasses holds one portion of an electronic circuit. That portion can include generic parts, such as a battery, that are applicable to different applications. Another portion of the electronic circuit is in a temple arrangement, temple adapter or removable temple part. This portion can be application specific, such as an electronic clock without a battery, or a temperature sensor.

In yet another embodiment, the electrical components can provide audio player capabilities. In such an embodiment, the electrical components can include audio file storage, an audio player and a battery. The electrical components may or may not include wireless communication circuitry.

Further, in an alternative embodiment, the output of an operation indicator can be audio. The audio output can be from one or more speakers associated with the frame of the eyeglasses. Such audio output can signal the user using natural language, voice synthesis, pre-recorded messages, etc.

In another embodiment, the electrical components can include a memory module. The memory module provides non-volatile data storage. For example, the memory module can be a portable (or removable) memory device (e.g., memory card). The memory module can, for example, store sensor information (which can be over an extended period of time). Such memory module can be remotely interrogated using wireless communication circuitry, or can be accessed through a wired connection with a tethered device.

In one embodiment, the electrical connection(s) can alternatively be used to allow information stored in the electrical components to be accessed or queried by a device. For example, when the electrical components include a memory module, the memory module can be accessed to read data (e.g., status information) stored therein.

As previously noted, the electrical components associated with a temple arrangement, a temple adapter and/or removable temple part can pertain to radiation monitoring circuitry. In such case, the electrical components within the temple arrangement, temple adapter or removable temple part alone or together with eyeglass electrical components can implement a radiation monitoring system. The radiation being monitored can, for example, pertain to one or more of UV, infrared and gamma radiation. In one embodiment, sunlight is considered as a type of radiation. In any case, additional details on radiation monitoring are further described in the related applications that have been incorporated herein by reference.

Also, the electrical components can pertain to health or fitness monitoring circuitry. In such case, the electrical components within the temple arrangement, the temple adapter removable temple part alone or together with eyeglass electrical components can implement a health or fitness monitoring system. Additional details on health or fitness monitoring are further described in the related applications that have been incorporated herein by reference.

In yet another embodiment, an electronic component in a temple arrangement, a temple adapter or removable temple part of a frame of eyeglasses interacts with an electronic component of an apparatus tethered to the eyeglasses to perform an operation. For example, a temple arrangement, a temple adapter removable temple part of a pair of eyeglasses holds one portion of an electronic system, and a tethered apparatus that tethers to the pair of eyeglasses includes another portion of the electronic system.

Still further, the invention can provide a new approach to marketing accessories, namely, electrical accessories, for eyewear. According to one method for providing temple arrangements, temple adapters and/or removable temple part for use with a pair of glasses, the method can initially provide a plurality of temple arrangements, temple adapters and/or removable temple part for a customer. This enables the customer to browse and select at least one temple arrangement, temple adapter or removable temple part. Each of the temple arrangements, temple adapters or removable temple part can have one or more electrical components at least partially embedded therein, with different temple arrangements, temple adapters or removable temple parts providing different electrical capabilities. Once a temple arrangement, temple adapter or removable temple part has been selected, the selected temple arrangement, temple adapter or removable temple part can be coupled to one of the corresponding temples of the eyewear (e.g., a pair of glasses). In the case where the selected temple arrangement is a temple tip, the selected temple tip is inserted onto (e.g., slid over) an end of the corresponding temple (after removing any previously installed temple tip if there was one). In the case where the selected temple adapter is to be coupled, the selected temple adapter can be attached to the corresponding temple. In the case where the selected removable temple part is to be coupled, the selected removable temple part can be attached to a remaining part (e.g., forward part) of the corresponding temple. Thereafter, the customer can make use of the eyewear with its associated electrical capabilities provided by the temple arrangement, temple adapters or removable temple part.

In one embodiment, once a temple arrangement, a temple adapter and/or removable temple part is provided to a customer, the customer can test the electrical capabilities of the pair of glasses. If the customer does not like the current selected temple arrangement, temple adapter or removable temple part, the customer can repeat the process by selecting and testing another temple arrangement, temple adapter or removable temple part. Before providing the eyewear with the temple arrangement, temple adapter or removable temple part, the customer can be required to pay a purchase (or rental) price for at least the temple arrangement, temple adapter or removable temple part. Thereafter, the customer can be permitted to return and replace the temple arrangement, temple adapter or removable temple part with another temple arrangement, temple adapter or removable temple part. Such returns or replacements can be available only for a limited period of time following their purchase.

Yet still another aspect of the invention relates to eyewear having an extended endpiece so as to facilitate placement of one or more electrical components at the extended endpiece. In one embodiment, a conventional pair of glasses has two endpieces, one on its left and the other on its right side of the frame. For example, the left endpiece is the region of the

frame approximately between the left hinge (or joint) and the left lens holder of the frame. Similarly, the right endpiece is the region of the frame approximately between the right hinge (or joint) and the right lens holder of the frame.

The one or more electrical components at an extended endpiece can operate independently or together with other electrical components provided elsewhere. For example, other electrical components can be provided in other regions of the frame for the eyewear. In another example, the other electrical components can be located in a bridge area of the frame for the eyewear. In such an example, given that the endpiece is extended, the one or more electrical components can be placed at the endpiece and thereby communicate with other electrical components in a front area (e.g., lens holder region or bridge region) or the other endpiece (which can also be extended) without having to communicate through a hinge or connector.

FIG. **11**A illustrates a pair of glasses **1100** according to one embodiment of the invention. The pair of glasses **1100** includes a first lens holder **1102** and a second lens holder **1104**. The lens holders **1102** and **1104** are capable of receiving lenses. The lenses can be prescription lenses or non-prescription lenses. The first lens holder **1102** has a first side and a second side. The second lens holder **1104** has a first side and a second side. The pair of glasses **1100** also has a bridge **1106** in between the first lens holder **1102** and the second lens holder **1104**. The bridge **1106** is coupled to the second side of the first lens holder **1102** and the first side of the second lens holder **1104**. The lens holders **1102** and **1104** and the bridge **1106** can be separate pieces or a single integral piece. The glasses **1100** can also be referred to as eyeglasses.

The pair of glasses **1100** also includes a first extended endpiece **1112** and a second extended endpiece **1113**. In addition, the pair of glasses **1100** includes a pair of temples, namely, a first temple **1108** and a second temple **1110**. The first extended endpiece **1112** connects to the first temple **1108** via a joint (or hinge) **1114**. The second extended endpiece **1113** connects to the second temple **1110** via a joint (or hinge) **1115**. In one embodiment, the extended endpieces **1112** and **1113** are larger as compared to conventional endpieces. As a result, the respective joints (or hinges) **1114** and **1115** are set back from the respective lens holders **1102** and **1104**. For example, in one embodiment, the hinge **1115** is set back from the lens holder **1104** by about 1 to 5 centimeters. One advantage of utilizing enlarged (or extended) endpieces **1112** and **1113** as illustrated in FIG. **11**A is that electrical components **1116** are able to be comfortably provided in the extended endpieces **1112** and **1113**. Moreover, another advantage is that the electrical components **1116** within the extended endpiece **1113** can electrically couple to other electrical components provided within the forward portion or front area of the frame without having to electrically connect through a joint or hinge. As illustrated in FIG. **11**A, the extended endpiece **1113** provides electrical components **1116** with at least a portion at an inner surface of the extended endpiece **1113**. The electrical components **1116**, in this example, include a display **1118** and a plurality of switches **1120** (e.g., buttons). As an example, the electrical components **1116** can, for example, implement an electrical system (e.g., pedometer system, UV monitoring system, or other physical condition monitoring system, etc.). In the embodiment of the glasses **1100** illustrated in FIG. **11**A, the electrical components **1116** are provided in the extended endpiece **1113**.

FIG. **11**B illustrates the pair of glasses **1100** according to another embodiment of the invention. More particularly, FIG. **11**B illustrates the pair of glasses **1100** illustrated in FIG. **11**A where the electrical components **1116** are provided as a module **1122** embedded internal to the extended endpiece **1113**. The module **1122** includes a plurality of interconnected electrical components, including the display **1118** and the switches **1120**. In addition, the glasses **1100** further include a separate electrical component **1124**. As illustrated in FIG. **11**B, the separate electrical component **1124** can be provided at the bridge **1106**. Still further, a conductive element (e.g., a wire) that electrically connects the module **1122** with the separate electrical component **1124** can be provided internal to the eyeglass frame, such as internal to the lens holder of **1104**. The nature of the separate electrical component **1124** can vary depending upon application. In the case in which the module **1122** pertains to a pedometer or health system, the separate electrical component **1124** can pertain to a sensor used to measure the heart rate of the user of the glasses **1100**. For additional details on a sensor utilized in this context, see U.S. Provisional Patent Application No. 60/787,850, filed Apr. 1, 2006, and entitled "EYEGLASSES WITH HEART RATE MONITOR," which is hereby incorporated herein by reference. Although not illustrated in FIG. **11**B, the extended end piece **1113** can also include a cavity (or opening) and a cover or a door. The module **1122** can be inserted or removed from the cavity by way of the cover or door.

FIGS. **12**A-**12**E illustrate a side view of eyeglass frames having an extended temples according to several embodiment of the invention. In FIG. **12**A, a side view of an eyeglass frame **1200** includes a lens holder (or a region immediately proximate to a lens holder) **1202**, an extended endpiece **1204** and a temple **1206**. The extended endpiece **1204** includes one or more electrical components **1208** partially or completely internal to the extended endpiece **1204**. In this embodiment, the manner by which the temple **1206** connects to the extended endpiece **1204** is not depicted. Hence, the temple **1206** can be integral with the extended endpiece **1200**, can be permanently coupled to the extended endpiece **1204**, or can be removably or pivotally coupled to the extended endpiece **1204**.

The side view of an eyeglass frame **1220** illustrated in FIG. **12**B is similar to the eyeglass frame **1200** illustrated in FIG. **12**A. However, in this embodiment, the temple **1206** is coupled to the extended endpiece **1204** by way of a joint (or hinge) **1210**. FIG. **12**C illustrates the eyeglass frame **1220** with the temple **1206** being substantially closed with respect to the eyeglass frame **1220**. As noted in FIG. **12**C, the temple **1206** can rotate (or pivot) with respect to the extended endpiece **1204** by way of the joint (or hinge) **1210**. In this embodiment, the temple **1206** is able to be rotated (or pivoted) as in conventional eyewear such that (i) the temples can be closed or folded inwards towards the lens holders when not being worn, which can facilitate storage or (ii) the temples can be extended to an open position or extended outwards away from the lens holders, so that the eyeglasses can be worn. While retaining the traditional notion of the folding temples, the eyeglass frame **1220** causes the joint **1210** to be set back from the lens holder **1202** so that the endpiece is extended, which can facilitate including or storing one or more electoral components within the endpiece.

The side view of an eyeglass frame **1230** illustrated in FIG. **12**D is similar to the eyeglass frame **1200** illustrated in FIG. **12**A. However, in this embodiment, the temple **1206** is coupled to the extended endpiece **1204** by a linking temple piece **1232**. The linking temple piece **1232** couples to the extended endpiece **1204** by way of a joint (or hinge) **1234**.

The joint **1234** allows the linking temple piece **1232** to rotate (or pivot) with respect to the extended endpiece **1204**. In addition, the linking temple piece **1232** includes a connector **1236** that is capable of receiving a corresponding connector **1238** associated with the temple **1206**. In this embodiment, the temple **1206** couples to the linking temple piece **1232** using the connectors **1236** and **1238** which provide physical connection (and optionally also electrical connection). The linking temple piece **1232** in turn can couple to the extended endpiece **1204** by way of the joint (or hinge) **1234**. The temple **1206** is thus easily removable from the linking temple piece **1232** of the eyeglass frame **1230**.

The side view of an eyeglass frame **1240** illustrated in FIG. **12**E is similar to the eyeglass frame **1200** illustrated in FIG. **12**A. However, in this embodiment, the extended endpiece **1204** includes a first connector **1242**, and the temple **1206** includes a corresponding connector **1244**. Here, the temple **1206** can be removably connected to the extended endpiece **1204** by way of the connectors **1242** and **1244**.

According to still another embodiment of the invention, temples for eyeglass frames can be not only removable but also piecewise replaceable. In other words, an entire temple can be removed and replaced with respect to an eyeglass frame. In another implementation, a portion of a temple can be removed and replaced with another portion. Allowing temples of eyeglass frames to be removed and replaced facilitates incorporating different electronic modules that are internal to, integral with, or at least partially embedded in the temples (or temple portions) to the changed. Also, the different temple portions can have different design appearances that allow the design of the eyeglasses, namely the temples, to be altered as desired by a user. In other words, the temples or temple portions can be swappable.

FIG. **13**A illustrates a temple **1400** having multiple parts according to one embodiment of the invention. The temple **1400** includes a temple base **1402** that couples to a forward portion **1404** of an eyeglass frame. The forward portion **1404** can, for example, pertain to an endpiece or a portion in the vicinity of a hinge (or joint) of a temple. In addition, the temple **1400** includes a temple tip **1406** (or rearward portion). One end of the temple base **1402** can connect to the forward portion **1404** and the other end of the temple base can connect to the temple tip (or rearward portion) **1406**. In one embodiment, the temple base **1402** and the temple tip **1406** of an eyeglass frame can be replaced (individually or in combination) with other temple bases and temple tips. For example, the temple base **1402** and/or the temple tip **1406** could be removed and replaced with another temple base and/or temple tip having a different functional capability or a different ornamental appearance.

FIG. **13**B illustrates a portion of an eyeglass frame **1420** according to one embodiment of the invention. The portion of the eyeglass frame **1420** is similar to a portion of the eyeglass frames **1200** illustrated in FIG. **12**A. One difference is that the temple **1206** now explicitly illustrates a temple base **1422** and a temple tip **1424**. The temple base **1422** and the temple tip **1424** can be removed and replaced (individually or in combination) with respect to the eyeglass frame, such as the extended endpiece **1204**.

FIG. **13**C illustrates a portion of an eyeglass frame **1340** according to another embodiment of the invention. The portion of the eyeglass frame **1440** is similar to a portion of the eyeglass frame **1200** illustrated in FIG. **12**A. However, in FIG. **13**C, the portion of the eyeglass frame **1440** includes a temple insert **1442**. The temple insert **1442** can include one or more electrical components **1444** internal to, integral with, or at least partially embedded in the temple insert **1442**. As illustrated in FIG. **13**C, the temple insert **1442** can be provided between the extended endpiece **1204** and the temple **1206** or the rearward portion of the temple. Although not shown in FIG. **13**C, the connection between the temple insert **1442** and the extended endpiece **1204** or the temple **1206** can be through use of a joint (or hinge) or by way of connectors as discussed above. In this embodiment, the temple insert **1442** can provide electrical components that can interact with the electrical components **1208** within the extended endpiece **1204** or elsewhere within the eyeglass frame. Hence, a user can optionally include the temple insert **1442** between the temple **1206** and the extended endpiece **1204** to provide additional functionality to the eyeglasses. In one embodiment, when the additional functionalities are not desired, the temple insert **1442** can be removed from the temple configuration, or the one or more electrical components **1444** can be removed from the temple insert **1442**.

Another feature of the wireless eyeglasses that may be provided is one or more electrical connections on the frame of the wireless eyeglasses so as to facilitate electrical connection with a battery charger. For example, when the power source for the wireless eyeglasses is a rechargeable battery, the ability to charge the battery without removing the battery from the frame (e.g., arm) of the wireless eyeglasses is advantageous. Hence, in one embodiment, the frame of the eyeglasses includes at least one connector or conductive element (e.g., terminal, pin, pad, trace, etc.) so that the electrical coupling between the rechargeable battery and the charger can be achieved. In this regard, the electrical connector or conductive element is provided on the frame of the eyeglasses and electrically connected to the battery. The placement of the electrical connector or conductive element on the frame serves to allow the wireless eyeglasses to be simply placed within a charger and consequently have the electrical connector or conductive element be in electrical contact with a counterpart or corresponding electrical connector or conductive element of the charger.

In one embodiment, the charger can be considered a docking station, upon which the wireless eyeglasses are docked so that the battery within the wireless eyeglasses is able to be charged. Hence, the frame of the wireless eyeglasses can likewise include an electrical connector or conductive element that facilitates electrical connection to the docking station when docked.

Power (e.g., external power source) can be coupled to the glasses through a connector. In one embodiment, the power source is embedded inside or inserted into the glasses. Different types of power sources are applicable. For example, the power source can be a battery, a fuel cell, a solar cell, or a re-chargeable battery. The rechargeable battery can be charged through a connector at the glasses.

In an earlier application, namely, U.S. Provisional Patent Application No. 60/509,631, filed Oct. 9, 2003, and entitled "TETHERED ELECTRICAL COMPONENTS FOR EYEGLASSES," which has been incorporated herein by reference, there can be a base connected to the glasses through a cord. The cord can be just a piece of flexible conductor encapsulated by a flexible insulator. Typically, a cord includes a number of electrical wires or conductors. There can be one or more electrical components in the base, and there can also be one or more electrical components in the cord. The different types of connectors previously described can be located in the base. In one embodiment, a power source is an electrical component in the base tethered to a pair of glasses. In another embodiment, the glasses are tethered to a base that has a connector. The connector is

connected to and draws power from an external electronic device. In this embodiment, electrical components in the glasses draw power from the external electronic devices.

In yet another embodiment, the power sources are in a base or portable device connected to the glasses through a wire connection, and the power sources can be rechargeable.

An arm for a frame of a pair of eyeglasses according to one embodiment can further include additional eyeglass electrical components, such as a light source. The light source can, for example, be a Light Emitting Diode (LED). The light source can provide ornamental lighting to the frame or can serve as an indicator light.

As explained, in a number of embodiments, the glasses include a switch, which typically is at least partially embedded in the glasses.

Sensor processing can receive sensor information from a sensor. The sensor information is typically associated with the user of the eyeglasses. There can be different types of sensors. The sensors can be considered either eyeglass electrical components or tethered electrical components. For example, the sensor can be a temperature sensor configured to sense the temperature of the user. The sensor can be a humidity sensor configured to sense how much the user has been perspiring. The sensor can sense whether at least one of the user's eyes is open or not. The sensor can sense if the user is crying. The sensor can sense the direction the user is looking. In a general sense, the sensor information can, for example, pertain to physical and/or emotional conditions of the user.

In another embodiment, another type of sensor is a condition sensor. The condition sensor can sense the conditions of the user of the glasses. Examples of physical sensors include sensing one or more of distance traveled, location, speed, calories consumed, temperature and vital signs associated with the user of the glasses. The distance traveled could represent the horizontal distance traveled or the vertical distance (i.e. elevation) traveled. The speed can be the rate of movement along the horizontal distance traveled and/or the vertical distance. In yet another embodiment, the condition sensor can sense the emotional conditions of the user of the glasses.

One advantage of cell phones is that you can make calls anywhere you can get a signal. However, one disadvantage is that you might be making a call in a noisy environment. In one embodiment, the glasses also include electrical components for noise cancellation. Such noise cancellation functionalities can be activated during a phone conversation.

In one approach, noise cancellation is achieved through a first and a second directional microphones. The first one points at the user's mouth, and the second one points away. For example, the first one can be at one of the hinges, whose directionality favors sound arriving from the user. There can also be a tube from the first microphone to or towards the mouth of the user, to guide the sound from the mouth to the microphone. The second microphone can be in the vicinity of the other hinge, whose directionality favors sound arriving in front of or outside of the user. Signals received from the second microphone are subtracted from signals received from the first microphone before the audio signals are further processed for transmission as the message from the user.

In yet another embodiment of power management, the amplification of the glasses on at least a range of frequencies depends on the ambient power level, or the noise level of the environment of the glasses. One approach to measure the noise level is to measure the average SPL at gaps of the audio signals. For example, a person asks the user the following question, "Have you left your heart in San Francisco?" Typically, there are gaps between every two words or between sentences or phrases. The glasses measure, for example, the root mean square ("rms") value of the power in each of the gaps, and can calculate another average among all of the rms values to determine the noise level. In one embodiment, the glasses increase the amplification so as to ensure that the average power of the output audio signals by its speaker(s) is higher than the noise level by a certain degree. For example, the average SPL of the output audio signals from the glasses is 20 dB above the noise level.

In another embodiment, if the average power level of the environment or the ambient noise level is higher than a preset threshold value, signal amplification is reduced. This average power level can include all the audio signals received by, such as the microphone(s) of the glasses. The rationale is that if the environment is very noisy, it would be difficult for the user to hear the audio signals from the other person anyway. As a result, the glasses should not keep on amplifying the audio signals independent of the environment. To illustrate, if the average power level of the environment is more than 75 dB, hearing enhancement amplification is reduced, such as to 0 dB.

A number of embodiments have been described involving a speaker in an eyemask or a night cap. In one embodiment, the audio output from the speaker can serve to cancel the environmental sounds in the vicinity of the user. For example, if the user is on an airplane, the surrounding environmental sound has a relatively high level of white noise. This white noise can be detected by a pickup device and cancelled by noise cancellation circuitry provided within the eyemask or night cap. Namely, the audio output from the speaker serves to cancel the white noise of the user's environment. In another embodiment, the electrical component embedded or partially embedded is not a speaker, but can be a sensor, which can sense a physiological function of the user.

Electrical components within the temple arrangement or temple adapter alone or together with eyeglass electrical components can implement a radiation monitoring system. The radiation being monitored can, for example, pertain to one or more of UV, infrared and gamma radiation. In one embodiment, sunlight is considered as a type of radiation. In any case, additional details on radiation monitoring are further described in the related applications that have been incorporated herein by reference.

Eyewear can include one or more auxiliary sensors. One another type of auxiliary sensor is a physical sensor. The physical sensor can sense physical conditions of the user of the glasses. Examples of physical sensors include sensing one or more of location, temperature, alertness, and vital signs (e.g., heart rate, blood pressure, etc.) associated with the user of the glasses. Still other physical sensors can sense emotions of the user. For example, the physical sensor could sense whether the user is calm, excited, happy, sad, angry, etc. In one embodiment, the physical sensor can also more generally sense user activity level. As an example, the user activity level can be used to provide a lifestyle indication. For example, a lifestyle indication might show that the user was active today or, alternatively, lazy today. Such a lifestyle indication can be displayed as a text or graphic symbol to let the user or others aware of the activity level.

The activity monitoring system can also include one or more switches with the eyewear. The switches can, for example, facilitate user input or control with respect to the activity monitoring system. For example, the switches can provide one or more of on/off, reset, on, on (and reset), and

calibration. The activity monitoring system can also provide a user with an indication of whether the system is currently on or off, such as by a graphical image on a display device or by a LED. The one or more switches can also be used to change operational settings, such as threshold levels, output type, user preferences, user physical characteristics (e.g., stride, weight), operational mode, or activation/deactivation of auxiliary sensors, if any.

The activity monitoring system can have a "being-worn" switch. In one embodiment, the "being-worn" switch enables the activity monitoring system to automatically determine when to monitor activity and when not to monitor activity. In particular, the activity can be monitored when an eyeglass frame having the activity monitoring system is "being-worn" and not when the eyeglass frame is not "being-worn." The "being-worn" switch can be positioned in the temple portion with the other components of the activity monitoring system. In one embodiment, the activity monitoring system is provided, as a module as noted above, and which further includes a switch. The switch can, for example, be a "being worn" switch. By having the switch integral with the module, the manufacture and assembly of the end-product having the activity monitoring system can be simplified. As examples, the "being-worn" switch can be an optical, magnetic or mechanical switching device.

The "being-worn" switch can make use of the situation that the temples are in an open position when the eyeglass frame is being worn, and in a closed position when not being worn. In one embodiment, the "being-worn" switch can be positioned at a temple proximate to a region that couples the temple to its corresponding lens holder. For example, the activity monitoring system (e.g., module) can be provided within the temple region near the end of the temple so that the "being worn" switch is adjacent the lens portion of the eyeglass frame.

The "being worn" switch can also be used by a user to signal the activity monitoring system to provide its output at an output device, such as a display device. For example, when the "being worn" switch is initially closed (i.e., being worn), the activity monitoring system can output its text or graphical output to the display device. Typically, the displayed output would be displayed only for a limited period of time (e.g., 10 seconds). Such an approach is typically more power efficient, yet permits the user to obtain the output information when desired. Alternatively, another switch (e.g., dedicated output switch) could be used to cause the output to be displayed for a limited period of time or while the switch is depressed.

In one embodiment, the eyewear (such as one including the activity monitoring system) can further include one or more auxiliary sensors. FIG. **14** is a chart **1500** that depicts examples of auxiliary sensors that can be utilized with the eyewear.

The chart **1500** indicates that one type of auxiliary sensor is a "being worn" sensor. The "being worn" sensor would indicate whether the glasses are being worn by its user. The "being worn" sensing mechanism can be performed using, for example, a thermal sensor, a motion detector, a stress sensor or a switch.

In one embodiment, a motion detector is used as a "being worn" sensor. A threshold can be set, such that if the amount of motion detected exceeds the threshold, the eyewear is assumed to be worn. The motion detector can, for example, be achieved by a mechanical means or an accelerometer.

In another embodiment, the "being worn" sensor includes one or more thermal sensors. In the case where two sensors are used, one sensor can be at approximately the middle of a temple, such as in a region that would receive heat from the head of the user wearing the glasses, and the other sensor can be positioned at the end of the same temple close to the hinge. If the temperature differential between the two sensors is beyond a certain preset value, the eyewear would be assumed to be worn.

In yet another embodiment, the "being worn" sensor includes a stress sensor at the hinge of the temple. The assumption is that when the eyewear is worn, the hinge is typically slightly stretched because typically the width of the head of the user can be slightly wider than the width between the temples when the two temples are in the extended positions. If the value of the stress sensor is beyond a certain preset value, the glasses would be assumed to be worn.

In still yet another embodiment, the "being worn" sensor can be implemented as a switch. For example, the switch can utilize optical, magnetic or mechanical means. In one embodiment, the switch can be positioned at the temple of the eyewear, such as a forward end of the temple proximate to a corresponding lens holder. Different embodiments of such sensors is also described in U.S. Provisional Patent Application No. 60/583,169, filed Jun. 26, 2004, entitled "ELECTRICAL COMPONENTS FOR USE WITH EYEWEAR, AND METHODS THEREFOR," which has been incorporated herein by reference, see, e.g., section entitled "EYEGLASSES WITH USER INPUT CAPABILITY."

Another type of auxiliary sensor is an environmental sensor. The environmental sensor can sense environmental conditions, such as one or more of temperature (e.g., ambient temperature), pressure, humidity and toxins (e.g., chemicals, radiation, etc.).

Still another type of auxiliary sensor is a physical sensor. The physical sensor can sense physical conditions of the user of the glasses. Examples of physical sensors include sensing one or more of location, temperature, alertness, and vital signs (e.g., heart rate, blood pressure, etc.) associated with the user of the glasses. Still other physical sensors can sense emotions of the user. For example, the physical sensor could sense whether the user is calm, excited, happy, sad, angry, etc. In one embodiment, the physical sensor can also more generally sense user activity level. As an example, the user activity level can be used to provide a lifestyle indication. For example, a lifestyle indication might show that the user was active today or, alternatively, lazy today. Such a lifestyle indication can be displayed as a text or graphic symbol to let the user or others aware of the activity level.

In one embodiment, one particular type of physical sensor is a heart-beat sensor. The heart-beat sensor measures the heart beat of the wearer of the eyewear. One implementation for the heart-beat sensor utilizes an infrared emitter and an infrared detector as components. The infrared emitter can be an infrared LED and the infrared detector can be an infrared photodiode (or a non-infrared photodiode with a separate infrared filter). The components can be located at a temple of the eyewear, with both the emitter and the detector facing the user when the eyewear is worn. In operation, the infrared emitter shines infrared radiation towards the user, and the detector captures the infrared signals reflected back by the skin of the user. The magnitude of the reflected signals depends on the amount of blood flowing below the skin, which, in turn, depends on (i.e., fluctuates with) the heart beat. The rate of emission by the emitter and reception by the detector can be modulated (e.g., amplitude modulate) in a frequency range much higher than the heart beat, such as three Kilohertz. And the signals from the detector can be low-pass filtered before they are measured to identify the

heart beat of the user. For example, the low-pass filter can have a cutoff frequency at about 1 Hertz (Hz).

It should be understood that the sensors might rely on more than one measured criteria. The one or more measured criteria might be used to determine the sensor output. The determination of the sensor output can involve estimation or prediction.

The auxiliary sensors can be provided in a redundant or fault-tolerant manner. For example, sensors can be provided in pairs. When one sensor of a pair malfunctions, the other one can replace it. In another embodiment, any of the auxiliary sensor information can be processed in a differential manner to examine changes to the auxiliary sensor information. The auxiliary sensors can by powered by a battery, solar energy, or kinetic energy. For reduced power consumption, the auxiliary sensors can remain in a low-power state unless data is being acquired by the auxiliary sensors. In yet another embodiment, two or more of the auxiliary sensors can communicate with one another (wired or wirelessly) to exchange data or control information.

In general, the auxiliary sensors can be fully or partially embedded in the eyewear or a base tethered to the eyewear. Alternatively, one or more of the auxiliary sensors can be separate from the eyewear, or any base tethered thereto, and wirelessly communicate with the eyewear or base.

FIG. **15** shows some of the electrical components for a player **1600** in a glasses according to an embodiment of the invention. The player includes a speaker **1602**, a data bus **1604** to facilitate data transfer among, for example, a processor **1606**, a storage device **1608**, and a coder/decoder (CODEC) **1610**. The processor **1606**, which can be a microprocessor or controller, controls the operation of the player **1600**. The storage device **1608** stores the information, which can be different types of appropriately-formatted media data. In one example, the information is digitally encoded audio signals. The storage device **1608** can include a number of separate storage elements. For example, the device can be a flash memory device, or a minidisk device, and a cache, which can improve the access time and reduce power consumption of the storage device **1608**. The storage device **1608** typically also includes a Read-Only Memory (ROM), which stores programs, utilities or processes to be executed in a non-volatile manner. The player **1600** can also include a RAM, such as for the cache.

Once a piece of information is selected to be played, the processor **1606** would supply the piece of information to the CODEC **1610**, which decompresses the media data and produces analog output signals for the speaker **1602**. In one embodiment, the bus **1604** is also coupled to an input/output device **1612**, which would allow information to be downloaded from an instrument to the glasses.

There are different approaches to identify a piece of information to be played. In one embodiment, different pieces of information in the storage device **1608** can be categorized, and the categorization can be hierarchical, with multiple levels in the hierarchy. To illustrate, assume that there are three levels. The top level can be the name of the football team; the second level can be the names of the players on the team, and the third level can be scoring statistics or other attributes of the players. The entries, such as the name of the players, can be abbreviated. There can be a control knob or switch to allow the user to scroll down entries in a level. By pushing the knob, the user selects an entry, which can lead the user to the next level. There can be an entry for moving up a level also. In one embodiment, once an entry is selected, the identity of that entry will be announced. For example, a selected entry is about the statistics of Joe Smith. Once that entry is selected, the speaker will state, "Joe Smith statistics." If that is the one the user wants, the user can signal his preference by, for example, pushing a switch.

In another embodiment, the information can be searched. The search can be based on one or more key words. As an example, the information is related to songs. A user can search by the name of the song, the name of the artists or music genre. Entry for the search term can be through voice recognition applications in the glasses. Based on the term verbalized by the user, a song will be selected. The glasses can ask the user if that is the song the user has selected. If the response is positive, the song will be played. If not, the glasses will ask the user to verbalize the term again. In another embodiment, entering the search terms is through the key pad of a portable device, wired or wirelessly, coupled to the glasses. Additional descriptions regarding having a portable device linked to a pair of glasses are further discussed below.

With the speaker relatively close to at least one ear of the user, the volume of the speaker does not have to be very high. In one embodiment, the volume of the speaker is limited, such as the maximum sound level is not more than 60 dB. If the glasses are powered by a battery, limiting the volume of the speaker would extend the lifetime of the battery. Such a limit can also reduce the chance of the speaker generating audio signals that might disturb people in the vicinity of the user. This, in turn, helps to provide information to the user in a relatively private manner.

In one embodiment, the glasses are powered by a battery. To extend its lifetime, the glasses include a timer. For example, if the glasses have a radio, after the radio is turned on for a preset amount of time, the timer will turn the radio off automatically. In another embodiment, the glasses include a speaker and the timer would turn the speaker off after the speaker has been turned on for a preset amount of time. The preset time can be determined by the timer.

In another embodiment, the glasses are powered by other types of sources, such as a solar cell or a fuel cell. Such other type of sources can be at one of temples of the glasses.

As explained, in a number of embodiments, the glasses include a switch, which typically is at least partially embedded in the glasses. For example, the switch can be used to turn the speaker on, or to tune the frequency of a radio. If the glasses have two speakers, such as one on each of the temples, there can be two switches, one on each temple to control the corresponding speaker. The two speakers can be for generating stereo audio signals for the user. There can also be one control switch for both speakers.

The switch in the glasses can have different attributes. It can be activated by different type of forces, including mechanical, radiation, magnetic, electrical, and temperature. The switch can also be activated remotely by a remote device. The switch can be based on one or more detectors. The switch can have different degrees or ranges of control, such as binary, multiple discrete steps or incremental control. The switch can be placed at different position on the glasses, such as on the side or top surface of a temple or at a joint. The control can take perception into consideration, such as based on texture, height and lateral position of multiple switches.

FIG. **16** illustrates a number of forces **1650** activating the switch according to different embodiments of the invention. They can be based on, for example, mechanical **1652**, radiation **1654**, magnetic **1656**, electrical **1658**, and temperature **1660**.

FIG. **17** illustrates a number of mechanical forces **1652** activating the switch according to different embodiments of the invention. The mechanical switch or sensor can be a conductive-elastomer switch **1702**, a membrane switch **1704**, a dome switch **1706**, a relatively simple wire switch **1708**, and a roller switch **1710**, such as a switch including a wheel. Another type of mechanical force can be based on stress **1711**, such as a switch based on piezoelectric force or a piezoelectric device.

In yet another embodiment, the mechanical switch is made so that the electrical circuitry in the glasses can be activated but not deactivated by the user. In other words, once activated, the switch is designed not to be deactivated by the user, and the circuit will remain on till the power source inside the glasses is depleted. One approach to implement such a switch is based on a piece of insulating material **1716** between a terminal of, for example, a battery and its contact with the circuit embedded in the glasses. When the battery is installed, at least one of its terminals is separated from its circuit contact. There can be a thin, flexible, insulating material, **1716**, such as a ribbon, positioned between the terminal and the contact. Though the circuit is embedded in the glasses, the insulating material **1716** extends outwardly from inside the glasses through a hole, such as a small hole, in the side wall of, for example, a temple of the glasses. In one embodiment, the hole or slot is located above or below the terminal and the contact, or the hole is not directly inline with the terminal and the contact. By pulling the insulating material out from the glasses, the terminal will establish electrical connection with the contact, activating the circuit and turning the speaker on.

In another embodiment of a switch based on mechanical force **1654**, the mechanical force is the force that is used to insert **1718** a battery into the glasses. Once the battery is inserted, the speaker in the glasses will be activated. The speaker will remain on until the battery is removed, or until the power in the battery is drained.

The switch can also be activated by radiation **1654**, or energies in a type of radiation, according to a number of embodiments of the invention. The radiation **1654** can be in the optical, or infrared or ultraviolet range. For example, the switch includes a photodiode or photo sensor in the glasses, and there is an opening above the photodiode. In one embodiment, the diode is activated by light getting to the diode through the opening. In another embodiment, the circuit is activated if the opening is covered to prevent light from getting to the diode.

The switch can be activated by magnetic forces **1656**. For example, there can be a magnetic sensor or a Hall effect detector inside a temple proximate to a joint of a pair of glasses. FIG. **18** shows a section of a pair of glasses **1750** with such a detector **1754**. The detector **1754** is electrically connected to a printed circuit board **1755**. When the temple **1752** is in its extended position, as when the glasses **1750** are ready to be worn, the detector **1754** will be directly adjacent to a magnet **1756** inside a lens holder **1758** at the corresponding joint **1760**. The magnet **1756** would activate the Hall effect detector **1754**. In another embodiment, a magnetic switch is activated based on changing the inductance of a coil. For example, the switch includes a steel rod that can be positioned in or out of a coil. The switch's range of control is based on the position of the rod with respect to the coil.

The switch can be activated depending on electrical forces **1658**. In one embodiment, the electrical force depends on capacitive effect. By changing the capacitance, the switch is turned on and off. For example, the capacitance is changed by placing one's finger over a metallic pad. In another example, by changing the amount of overlap between two metallic sheets that are not in contact, the capacitance between the two metallic sheets will change. This then changes the range of control of the switch.

In another embodiment, the electrical force **1658** is based on resistive effect. For example, the switch is made up of a slide or a rotary potentiometer. By changing the amount of coupling, the amount of resistance is changed to reflect the range of control of the switch.

In one embodiment, the switch's activation can depend on temperature **1660**. For example, the switch includes a temperature sensor. When the temperature reaches a certain point, the switch is activated.

In yet another embodiment, the switch is controlled by a remote controller. For example, the glasses include an infrared detector. The remote controller can generate infrared radiation. By aiming the controller at the detector, the infrared radiation can activate the infrared detector and the switch is activated. Or, if the user moves into the vicinity of a corresponding infrared transmitter, circuits in the glasses would be activated.

The switch can include one or more previously-described sensor or detector of different types of forces. For example, the switch can use two photo sensors. One sensor is exposed to light on the outside surface of the temple and the other is exposed to light on the inside surface of the temple, such as close to the ear. Based on their differential output, the switch is activated. As another example, there are two temperature sensors in the glasses. One is located close to a joint and the other is at the temple close to the ear. Again, the switching action depends on their differential outputs. In yet another embodiment, the glasses include more than one type of switch. There can be one type of switch, such as a mechanical switch, acting as an on/off switch, and another, such as a switch using electrical forces, as an incremental switch to change frequency.

As described, in a number of embodiments, the switch can provide different degrees or ranges of control. In one embodiment, there are two degrees of control, such as in an on/off switch. In another embodiment, there can be multiple discrete degrees, steps or positions. For example, the switch is a roller with discrete notches to indicate different discrete positions. Or, there can be two mechanical switches, placed side-by-side. Pushing one switch will increment one step, and pushing the other will decrement one step.

In yet another embodiment, the change from one degree to the next is gradual and not noticeably discrete. This can be achieved with two (2) sensors arranged in quadrature. FIGS. **19A-19C** show examples of different embodiments of such a switch based on two photodiodes or photo detectors.

FIG. **19A** shows an embodiment **1800** with a wheel **1802** (roller) having clear strips, **1804**, **1806** and **1808**, alternating with black strips, **1810**, **1812** and **1814**, and two photodiodes, **1816** and **1818**. Most of the wheel **1802** and the two diodes, after incorporated into the temple **1820**, are covered by a piece of material **1822**. The two diodes, **1816** and **1818**, are exposed to ambient light through a clear window **1824**. A part of the wheel **1802** is extended out of the temple **1820**, allowing the wheel **1802** to be turned about its axis **1826**. The wheel **1802** can have teeth for friction turning. As the wheel **1802** rotates about the axis **1826**, based on the differential outputs from the diodes, the direction of movement of the wheel **1802**—clockwise or counterclockwise—is determined. For example, if the wheel **1802** is rotated clockwise, the top diode **1816** senses light before the bottom **1818** senses light. On the other hand, if the wheel **1802** is

rotated counterclockwise, the bottom diode **1818** senses light before the top **1816**. Based on the signals from the two diodes, one would be able to tell if the wheel is being turned clockwise or counterclockwise. Clockwise can denote increase and counterclockwise can denote decrease. This embodiment can be used, for example, to change frequency. By turning the wheel **1802** clockwise, the frequency of the radio goes up. And, by turning the wheel **1802** counterclockwise, the frequency goes down. Such a wheel **1802** is also applicable for other purposes, such as controlling the volume of a speaker.

FIG. **19**B shows an embodiment **1850** with a wheel **1852** having black **1854** and reflecting **186356** strips, two photodiodes, **1858** and **1860**, and a LED **1862**. Again, most of the wheel, the two diodes and the LED are covered by a sheet of material **1864**. If a reflecting strip **1856**, instead of a black strip **1854**, goes over a diode, more light from the LED will be reflected back and received by the diode. If a black strip **1854** goes over a diode, output from the diode will be significantly reduced. Again, based on the signals from the diodes, the direction of rotation can be determined, which, in turn, can be used to indicate incrementing or decrementing outputs.

FIG. **19**C shows an embodiment **1900** again using two photodiodes, **1902** and **1904**, but without a wheel. The two diodes, **1902** and **1904**, are exposed to ambient light unless they are covered. In this embodiment, whether the finger **1906** or another object is moving from the first diode **1902** to the second diode **1904**, or from the second diode **1904** to the first diode **1902** can be determined based on the signals from the diodes. For example, the finger **1906** sliding in a forward direction would trigger a signal from the first diode **1902** before the second diode **1904**. On the other hand, sliding the finger in a backward direction would trigger a signal from the second diode before the first diode. Thus, the outputs from the two diodes can show the direction of movement of the finger. One can then, for example, assign forward movement (from the first **1902** to the second **1904**) as increment, and backward movement (from the second **1904** to the first **1902**) as decrement.

A switch can be placed at different location on a pair of glasses. In one embodiment, the switch is positioned on one of the side surfaces of one of the temples, such as the side that is not facing the face of the user when the glasses are worn. In another embodiment, the switch is positioned on a top surface of one of the temples. In yet another embodiment, the switch is positioned at one of the joints or hinges of the glasses. For example, there is a mechanical switch at a joint. If the corresponding temple is extended, as in the position when the glasses are worn, the switch will be pressed, which can indicate that the switch has been activated.

In one embodiment, the user can be using a switch when the glasses are worn. Depending on the position and the type of switch, the user may not be able to see the switch when he is manipulating it. In one embodiment, the design of the switch takes into consideration perception. To illustrate, there are two mechanical switches on the glasses. The top surfaces of the two switches have different texture. One switch has a smooth surface and the other has a rough surface. Pushing the rough surface implies incrementing one step and pushing the smooth surface implies decrementing one step. This type of perception design is based on tactile effect. In another example, the heights of the two switches are different. The taller switch is for one effect and the shorter is for another. In yet another embodiment, the lateral position of the two switches has significance. For example, the two mechanical switches are on the top surface or edge of a temple. By pushing the switch closer to the lens holder, the volume of the speaker in the glasses goes up; and by pushing the switch further away from the lens holder, the volume of the speaker goes down. In another example, the two switches are under the two ends of a piece of materials, such as a rocker-lever, which can be plastic. Rocking the plastic piece forward is an increment motion, and rocking the plastic piece backwards is a decrement motion.

A number of embodiments have been described where information is available only for a relatively short duration of time. In one embodiment, the information is available for a longer duration of time. For example, after the short duration of time, the battery in the glasses is drained. In order to continue on running the electronics inside the glasses to get the information, the user can replace the battery in the glasses with a new battery. In this embodiment, the glasses are designed so that the battery is replaceable by the user. Or, in another embodiment, the battery is rechargeable through a connector at the glasses.

A number of embodiments have been described regarding the glasses with a speaker for providing information to the user. In one embodiment, the glasses also include one or more light emitting diodes. The LEDs can be for entertaining purposes. For example, the information provided to the user is music. If the audio signals received are beyond a certain threshold, one or more of the LEDs will be activated. The activation of the one or more LEDs can then be synchronized to the sound of the speaker. In another example, a number of LEDs could be arranged as an array on the outside surface of one of the temples. The array could display graphics, pictures, or scrolling text. The array could also be located at other locations on the glasses, such as across the front surface or the top surface of the bridge or the lens-holders of the glasses.

In still yet another embodiment, the "being worn" sensor can be implemented as a switch. For example, the switch can utilize optical, magnetic or mechanical means. In one embodiment, the switch can be positioned at the temple of the eyewear, such as a forward end of the temple proximate to a corresponding lens holder. Different embodiments of such sensors is also described in U.S. Provisional Patent Application No. 60/583,169, filed Jun. 26, 2004, entitled "ELECTRICAL COMPONENTS FOR USE WITH EYEWEAR, AND METHODS THEREFOR," which has been incorporated herein by reference, see, e.g., section entitled "EYEGLASSES WITH USER INPUT CAPABILITY."

In one embodiment, a pair of glasses has access to voice recognition software. The software can be embedded in (a) the glasses, (b) a base tethered to the glasses, (c) a portable device wired or wirelessly coupled to the glasses or to the base, or (d) a computing system wired or wirelessly coupled to the glasses. Or, the software or firmware can be in more than one of the above devices.

The operation of the electrical components can be on-demand. For example, the on/off switch can be voice activated. The glasses are trained to recognize specific recitation, such as specific sentences or phrases, and/or the user's voice. To illustrate, when the user says sentences like any of the following, the hearing enhancement capabilities would be automatically turned from the sleep mode to the active mode: What did you say? Louder. You said what?

There are different approaches to make a user selection, such as selection of a song. In one embodiment, the media assets/songs can be categorized in the asset player. The categorization can be based on the names of artists, albums and/or songs. The categorization can be hierarchical, with

multiple levels in the hierarchy. To illustrate, assume that there are three levels. The top level can be the name of a singer; the second level can be the time periods when the assets were produced, and the third level can be the names of the songs. The entries, such as the name of the singer, can be abbreviated. There can be a small display and a control knob to allow a user to scroll down entries in a level. By pushing the knob, the user selects an entry, which can lead the user to a lower level. There can be an entry for moving up a level also. In another embodiment, the display is a touch-screen display, allowing entries to be entered directly on the display. In yet another embodiment, entries can be selected based on voice recognition.

In another embodiment, information can be searched. The search can be based on one or more key words. As an example, the information is related to songs. A user can search by the name of the song, the name of the artists or music genre. Entry for the search term can be through voice recognition applications in the glasses. Based on the term verbalized by the user, a song will be selected. The glasses can ask the user if that is the song the user has selected. If the response is positive, the song will be played. If not, the glasses will ask the user to verbalize the term again. In another embodiment, entering the search terms is through the key pad of a portable device, wired or wirelessly, coupled to the glasses.

The various aspects, embodiments, implementations and features of the invention noted above can be combined in various ways or used separately. Those skilled in the art will understand from the description that the invention can be equally applied to or used in other various different settings with respect to various combinations, aspects, embodiments, implementations or features provided in the description herein.

Certain aspects of the invention can be implemented in software, hardware or a combination of hardware and software. Certain aspects of the invention can also be embodied as computer readable code on a computer readable medium. The computer readable medium is any data storage device that can store data which can thereafter be read by a computer system. Examples of the computer readable medium include read-only memory, random-access memory, CD-ROMs, magnetic tape, optical data storage devices, and carrier waves. The computer readable medium can also be distributed over network-coupled computer systems so that the computer readable code is stored and executed in a distributed fashion.

The advantages of the invention are numerous. Different embodiments or implementations may yield one or more of the following advantages. One advantage of the invention is that electrical components can be provided integral with or attached to a temple arrangement, a temple adapter or a removable temple part for use with a pair of eyeglasses. Another advantage of the invention is that after-market changes to electrical capabilities of eyeglasses can be relatively easily achieved. Another advantage of the invention is that communication, computation, information capturing or sensing, and/or operational capabilities can be provided for eyeglasses without substantial interference to style or design choices of the glasses. Still another advantage of the invention is that wireless communications, radiation monitoring, fitness monitoring and/or health monitoring can be supported by the electrical components. Yet another advantage of the invention is the ability to provide hands-free wireless communications capability.

As noted above, this application incorporates by reference, each of the following: (i) U.S. patent application Ser. No. 10/822,218 (now U.S. patent Ser. No. 10/822,218), filed Apr. 12, 2004, and entitled "EYEGLASSES FOR WIRELESS COMMUNICATIONS;" (ii) U.S. patent application Ser. No. 10/964,011 (now U.S. Pat. No. 7,192,136), filed Oct. 12, 2004, and entitled "TETHERED ELECTRICAL COMPONENTS FOR EYEGLASSES;" (iii) U.S. Pat. No. 7,116,976; (iv) U.S. Pat. No. 7,500,746; (v) U.S. patent application Ser. No. 11/078,857, filed Mar. 11, 2005, and entitled "RADIATION MONITORING SYSTEM;" (vi) U.S. patent application Ser. No. 11/183,283, filed Jul. 15, 2005, and entitled "EVENT EYEGLASSES;" (vii) U.S. Pat. No. 7,760,898; (viii) U.S. Pat. No. 7,500,747; (ix) U.S. Pat. No. 7,380,936; (x) U.S. Pat. No. 7,255,437; and (xi) U.S. Pat. No. 7,806,525.

Numerous specific details are set forth in order to provide a thorough understanding of the present invention. However, it will become obvious to those skilled in the art that the invention may be practiced without these specific details. The description and representation herein are the common meanings used by those experienced or skilled in the art to most effectively convey the substance of their work to others skilled in the art. In other instances, well-known methods, procedures, components, and circuitry have not been described in detail to avoid unnecessarily obscuring aspects of the present invention.

In the foregoing description, reference to "one embodiment" or "an embodiment" means that a particular feature, structure, or characteristic described in connection with the embodiment can be included in at least one embodiment of the invention. The appearances of the phrase "in one embodiment" in various places in the specification are not necessarily all referring to the same embodiment, nor are separate or alternative embodiments mutually exclusive of other embodiments. Further, the order of blocks in process flowcharts or diagrams representing one or more embodiments of the invention do not inherently indicate any particular order nor imply any limitations in the invention.

Many features and advantages of the present invention are apparent from the written description. Since numerous modifications and changes will readily occur to those skilled in the art, it is not desired to limit the invention to the exact construction and operation as illustrated and described. Hence, all suitable modifications and equivalents may be resorted to as falling within the scope of the invention.

What is claimed is:

1. A system, comprising:

a head-worn personal electronic apparatus, including at least:

a head-worn structure configured to be worn by a user;

a speaker at least partially contained within the head-worn structure, the speaker being configured to be worn proximate to an ear of the user when the head-worn structure is being worn by the user;

a touch sensitive surface at least partially contained within the head-worn structure and configured to sense a touch input associated with the user;

a rechargeable battery contained within the head-worn structure;

electronic circuitry contained within the head-worn structure, the electronic circuitry being electrically connected to at least the rechargeable battery, and the electronic circuitry being electrically connected to the touch sensitive surface;

wireless communication circuitry at least partially contained within the head-worn structure, the wireless communication circuitry being electrically connected to at least the rechargeable battery; and

at least one conductive element at least partially included within the head-worn structure, the at least one conductive element being at least partially exposed to enable interconnection therewith, the at least one conductive element being electrically connected to at least the rechargeable battery; and

a charging apparatus having at least a charging connector, wherein on placement of the head-worn personal electronic apparatus in the charging apparatus, electrical connection results at least from the at least one conductive element connecting with the charging connector, and thereby the rechargeable battery of the head-worn personal electronic apparatus is able to be recharged while the head-worn personal electronic apparatus is placed in the charging apparatus.

2. A system as recited in claim **1**, wherein the sensed touch input by the touch sensitive surface operates to at least alter operation of the head-worn personal electronic apparatus.

3. A system as recited in claim **2**, wherein the head-worn personal electronic apparatus is configured to support voice calls to the user, and

wherein the at least one operation of the head-worn personal electronic apparatus being altered concerns at least accepting or declining a voice call to the user.

4. A system as recited in claim **2**, wherein the head-worn personal electronic apparatus is configured to support audio output to the user via the speaker, and

wherein the at least one operation of the head-worn personal electronic apparatus being altered concerns control of the audio output being provided to the user.

5. A system as recited in claim **2**, wherein the head-worn personal electronic apparatus is configured to distinguish at least a direction of the user input with respect to the touch sensitive surface.

6. A system as recited in claim **2**, wherein the head-worn personal electronic apparatus is configured to detect at least a sliding of a finger action with respect to the touch sensitive surface.

7. A system as recited in claim **2**, wherein the head-worn personal electronic apparatus is configured to facilitate determination at least whether the user input pertains to a forward sliding action or a backward sliding action with respect to the touch sensitive surface.

8. A system as recited in claim **1**, wherein the head-worn structure comprises:

a physical condition sensor at least partially contained within the head-worn structure and configured to acquire data pertaining to a physical condition of the user, the physical condition sensor being provided at least partially contained within the head-worn structure.

9. A system as recited in claim **1**, wherein the head-worn personal electronic apparatus comprises:

at least one magnetic element at least partially contained within the head-worn structure and configured to support a magnetic force that facilitates an electrical connection.

10. A system as recited in claim **1**, wherein the head-worn personal electronic apparatus comprises:

a microphone at least partially contained within the head-worn structure,

wherein the head-worn personal electronic apparatus is configured to receive a voice input via the microphone, determine or receive a determination of a requested operation from the voice input using voice recognition, and control an operation by the head-worn personable electronic apparatus based on the requested operation.

11. A system as recited in claim **1**, wherein the head-worn structure comprises:

a radiation sensor, operatively connected to the rechargeable battery, at least partially contained within the head-worn structure and configured to sense radiation.

12. A system as recited in claim **1**, wherein the head-worn personal electronic apparatus comprises:

a sensor at least partially contained within the head-worn structure and configured to sense data indicative of whether the head-worn personal electronic apparatus is being worn by the user.

13. A system as recited in claim **12**, wherein the sensor is electrically connected to the electronic circuitry, and wherein the electronic circuitry contained within the head-worn structure of the head-worn personal electronic apparatus is configured to at least alter operation of the head-worn personal electronic apparatus based at least in part on the sensed data from the sensor.

14. A system as recited in claim **13**, wherein the head-worn personal electronic apparatus is configured to support audio output to the user via the speaker, and

wherein the operation of the head-worn personal electronic apparatus being altered concerns control of the audio output being provided to the user.

15. A system as recited in claim **13**, wherein the head-worn personal electronic apparatus is configured to support a low power operational mode, and

wherein the operation of the head-worn personal electronic apparatus being altered concerns operation of the head-worn personal electronic apparatus in the low power operational mode.

16. A system as recited in claim **1**, wherein the system comprises:

a Hall effect detector configured to capture data associated with a magnetic characteristic.

17. A system as recited in claim **1**, wherein the head-worn personal electronic apparatus comprises:

a bone conducting element at least partially contained within the head-worn structure and configured to operate in accordance with acoustic characteristics, the bone conducting element being operatively connected to the electronic circuitry.

18. A system, comprising:

a head-worn personal electronic apparatus, including at least:

a head-worn structure configured to be worn by a user;

a speaker at least partially contained within the head-worn structure, the speaker being configured to be at or adjacent to an ear of the user when the head-worn structure is being worn by the user;

a first microphone at least partially contained within the head-worn structure, the first microphone being positioned to pick up at least audio input from at least the user;

a second microphone at least partially contained within the head-worn structure, the second microphone being positioned to pick up at least environmental audio input associated with an environment around the head-worn personal electronic apparatus;

a rechargeable battery contained within the head-worn structure;

a sensor at least partially contained within the head-worn structure and configured to capture data;

electronic circuitry contained within the head-worn structure, the electronic circuitry being electrically connected to at least one or more of the first microphone, the second microphone, the rechargeable

battery and the sensor, the electronic circuitry being configured to at least process the audio input from at least the user via the first microphone to remove at least a portion of the environmental audio input associated with the environment picked up via the second microphone, the electronic circuitry being configured to process at least the data captured by the sensor, and the electronic circuitry being configured to determine whether the head-worn structure is being worn by a user based on at least the processed sensor data;

wireless communication circuitry at least partially contained within the head-worn structure, the wireless communication circuitry being electrically connected to at least the rechargeable battery; and

at least one conductive element at least partially included within the head-worn structure, the at least one conductive element being at least partially exposed to enable interconnection therewith, the at least one conductive element being electrically connected to at least the rechargeable battery; and

a charging apparatus having at least a charging connector, wherein on placement of the head-worn personal electronic apparatus in the charging apparatus, electrical connection results at least from the at least one conductive element connecting with the charging connector, and thereby the rechargeable battery of the head-worn personal electronic apparatus is able to be recharged while the head-worn personal electronic apparatus is placed in the charging apparatus.

19. A system as recited in claim **18**, wherein the first microphone is positioned to be directed forward towards the user's front when the head-worn structure is being worn by the user, and the second microphone is positioned to be directed outward away from the user's head when the head-worn structure is being worn by the user.

20. A system as recited in claim **19**, wherein the head-worn personal electronic apparatus comprises:

a touch sensitive surface at least partially contained within the head-worn structure and configured to sense a touch input associated with the user, wherein the sensed touch input operating to at least alter operation of the head-worn electronic personal audio apparatus.

21. A system as recited in claim **20**, wherein the head-worn electronic personal audio apparatus is configured to support audio output to the user via the speaker, and

wherein the at least one operation of the head-worn electronic personal audio apparatus being altered concerns control of the audio output being provided to the user.

22. A system as recited in claim **20**, wherein the system comprises:

a Hall effect detector configured to capture data associated with a magnetic characteristic.

23. A system as recited in claim **18**, wherein the sensor is positioned to be directed towards the user's head when the head-worn structure is being worn.

24. A system as recited in claim **23**, wherein the data captured by the sensor is dependent on thermal characteristics of the user's head when the head-worn structure is being worn.

25. A system as recited in claim **18**, wherein the head-worn personal electronic apparatus is configured to receive a voice input via the first microphone, determine or receive a determination of a requested operation from the voice input using voice recognition, and control an operation by the head-worn personal electronic apparatus based on the requested operation.

26. A system as recited in claim **18**, wherein the head-worn personal electronic apparatus is configured to at least alter operation of the head-worn personal electronic apparatus based at least in part on the sensed data from the sensor.

27. A system as recited in claim **26**, wherein the head-worn personal electronic apparatus is configured to support audio output to the user via the speaker, and

wherein the operation of the head-worn personal electronic apparatus being altered concerns control of the audio output being provided to the user.

28. A system as recited in claim **18**, wherein the head-worn personal electronic apparatus comprises:

a user input device supported by the head-worn structure, the user input device being configured to receive a user input, the user input device is based on at least capacitive effect, wherein the user input being received induces at least a capacitive change to produce at least an electrical response.

29. A system as recited in claim **28**, wherein the user input device is configured to distinguish at least a direction of the user input with respect to the user input device.

30. A system as recited in claim **28**, wherein the electronic circuitry is electrically connected to the user input device to receive user input data from the user input device, and wherein the head-worn personal electronic apparatus is configured to detect at least a sliding of a finger action with respect to the user input device using at least the electronic circuitry and the user input data.

31. A system as recited in claim **28**, wherein the electronic circuitry is electrically connected to the user input device to receive user input data from the user input device, and wherein the head-worn personal electronic apparatus is configured to distinguish at least whether the user input pertains to a forward sliding action or a backward sliding action with respect to the user input device using at least the electronic circuitry and the user input data.

32. A system as recited in claim **18**, wherein the system comprises:

a Hall effect detector.

33. A system as recited in claim **18**, wherein the head-worn personal electronic apparatus comprises:

a bone conducting element at least partially contained within the head-worn structure and configured to operate based on signals associated with sound, the bone conducting element being operatively connected to the electronic circuitry.

34. A system as recited in claim **18**, wherein the conductive element is a conductive pad.

35. A system, comprising:

a head-worn personal electronic apparatus, including at least:

a head-worn structure configured to be worn by a user;

a speaker at least partially contained within the head-worn structure, the speaker being configured to be worn proximate to an ear of the user when the head-worn structure is being worn by the user;

a first microphone at least partially contained within the head-worn structure, the first microphone being positioned to pick up at least audio input from at least the user;

a second microphone at least partially contained within the head-worn structure, the second microphone being positioned to pick up at least environmental

audio input associated with an environment around the head-worn personal electronic apparatus;

a rechargeable battery contained within the head-worn structure;

a "being worn" sensor at least partially contained within the head-worn structure and configured to detect data indicative of whether the head-worn structure of the head-worn personal electronic apparatus is being worn;

electronic circuitry contained within the head-worn structure, the electronic circuitry being electrically connected to at least one or more of the first microphone, the second microphone, the rechargeable battery and the "being worn" sensor, the electronic circuitry being configured to at least process the audio input from at least the user via the first microphone to remove at least a portion of the environmental audio input associated with the environment picked up via the second microphone, the electronic circuitry being configured to process at least the detected data captured by the "being worn" sensor;

wireless communication circuitry at least partially contained within the head-worn structure, the wireless communication circuitry being electrically connected to at least the rechargeable battery; and

at least one conductive element at least partially included within the head-worn structure, the at least one conductive element being at least partially exposed to enable interconnection therewith, the at least one conductive element being electrically connected to at least the rechargeable battery; and

a charging apparatus having at least a charging connector, wherein on placement of the head-worn personal electronic apparatus in the charging apparatus, electrical connection results at least from the at least one conductive element connecting with the charging connector, and thereby the rechargeable battery of the head-worn personal electronic apparatus is able to be recharged while the head-worn personal electronic apparatus is placed in the charging apparatus.

36. A system as recited in claim **35**, wherein the detected data by the "being worn" sensor is dependent on a physical characteristic of the user.

37. A system as recited in claim **35**, wherein the head-worn structure comprises:

an accelerometer, operatively connected to the rechargeable battery, at least partially contained within the head-worn structure and configured to sense movement data.

38. A system, comprising:

a head-worn personal electronic apparatus, including at least:

a head-worn structure configured to be worn by a user;

a speaker at least partially contained within the head-worn structure, the speaker being configured to be at or adjacent to an ear of the user when the head-worn structure is being worn by the user;

a motion detector at least partially contained within the head-worn structure and configured to provide motion data pertaining to the head-worn personal electronic apparatus;

a first microphone at least partially contained within the head-worn structure, the first microphone being positioned to pick up at least audio input from at least the user;

a second microphone at least partially contained within the head-worn structure, the second microphone being positioned to pick up at least environmental audio input associated with an environment around the head-worn personal electronic apparatus;

a touch sensitive surface at least partially contained within the head-worn structure and configured to sense a touch input associated with the user, wherein the sensed touch input operating to at least alter operation of the head-worn electronic personal audio apparatus;

a rechargeable battery contained within the head-worn structure;

electronic circuitry contained within the head-worn structure, the electronic circuitry being electrically connected to at least the rechargeable battery;

wireless communication circuitry at least partially contained within the head-worn structure, the wireless communication circuitry being electrically connected to at least the rechargeable battery; and

at least one conductive element at least partially included within the head-worn structure, the at least one conductive element being at least partially exposed to enable interconnection therewith, the at least one conductive element being electrically connected to at least the rechargeable battery; and

a charging apparatus having at least a charging connector, wherein on placement of the head-worn personal electronic apparatus in the charging apparatus, electrical connection results at least from the at least one conductive element connecting with the charging connector, and thereby the rechargeable battery of the head-worn personal electronic apparatus is able to be recharged while the head-worn personal electronic apparatus is placed in the charging apparatus.

39. A system as recited in claim **38**, wherein the head-worn personal electronic apparatus comprises:

wherein the electronic circuitry is configured to process the audio input from at least the user via the first microphone to remove at least a portion of the environmental audio input associated with the environment picked up via the second microphone, and

wherein the head-worn personal electronic apparatus is configured to receive a voice input via the first microphone, determine or receive a determination of a requested operation from the voice input using voice recognition, and control an operation by the head-worn personal electronic apparatus based on the requested operation.

40. A system as recited in claim **39**, wherein the head-worn personal electronic apparatus comprises:

at least one magnetic element at least partially contained within the head-worn structure and configured to support a magnetic force that facilitates an electrical connection.

41. A system as recited in claim **39**, wherein the head-worn personal electronic apparatus comprises:

a sensor at least partially contained within the head-worn structure and configured to sense data indicative of whether the head-worn personal electronic apparatus is being worn by the user,

wherein the head-worn personal electronic apparatus is configured to at least alter operation of the head-worn personal electronic apparatus based at least in part on the sensed data from the sensor.

42. A system as recited in claim 41, wherein the head-worn personal electronic apparatus is configured to support audio output to the user via the speaker, and

wherein the operation of the head-worn personal electronic apparatus being altered concerns control of the audio output being provided to the user.

43. A system as recited in claim 41, wherein the head-worn personal electronic apparatus is configured to support a low power operational mode, and

wherein the operation of the head-worn personal electronic apparatus being altered concerns operation of the head-worn personal electronic apparatus in the low power operational mode.

44. A system, comprising:

a head-worn personal electronic apparatus, including at least:

a head-worn structure configured to be worn by a user;

a speaker at least partially contained within the head-worn structure, the speaker being configured to be at or adjacent to an ear of the user when the head-worn structure is being worn by the user;

a motion detector at least partially contained within the head-worn structure and configured to provide motion data pertaining to the head-worn personal electronic apparatus;

a first microphone at least partially contained within the head-worn structure, the first microphone being positioned to pick up at least audio input from at least the user;

a second microphone at least partially contained within the head-worn structure;

a rechargeable battery contained within the head-worn structure;

electronic circuitry contained within the head-worn structure, the electronic circuitry being electrically connected to at least the rechargeable battery;

wireless communication circuitry at least partially contained within the head-worn structure, the wireless communication circuitry being electrically connected to at least the rechargeable battery;

a radiation emitter at least partially contained within the head-worn structure and configured to at least direct radiation towards the user when at least the head-worn structure of the head-worn personal electronic apparatus is being worn;

a radiation detector at least partially contained within the head-worn structure and configured to detect at least a portion of the radiation from the radiation emitter that is reflected back from the user when at least the head-worn structure of the head-worn personal electronic apparatus is being worn; and

at least one conductive element at least partially included within the head-worn structure, the at least one conductive element being at least partially exposed to enable interconnection therewith, the at least one conductive element being electrically connected to at least the rechargeable battery; and

a charging apparatus having at least a charging connector,

wherein on placement of the head-worn personal electronic apparatus in the charging apparatus, electrical connection results at least from the at least one conductive element connecting with the charging connector, and thereby the rechargeable battery of the head-worn personal electronic apparatus is able to be recharged while the head-worn personal electronic apparatus is placed in the charging apparatus.

45. A system as recited in claim 44,

wherein the radiation detector is operatively connected to the electronic circuitry, and

wherein electronic circuitry within the head-worn structure is configured to facilitate determining whether the head-worn structure of the head-worn personal electronic apparatus is being worn by the user.

46. A system as recited in claim 45, wherein the head-worn personal electronic apparatus comprises:

at least one magnetic element at least partially contained within the head-worn structure and configured to support a magnetic force that facilitates an electrical connection.

47. A system as recited in claim 45, wherein

the head-worn personal electronic apparatus is configured to at least alter operation of the head-worn personal electronic apparatus based at least in part on the determination of whether the head-worn structure of the head-worn personal electronic apparatus is being worn by the user based on at least the motion data.

48. A system as recited in claim 47, wherein the head-worn personal electronic apparatus is configured to support audio output to the user via the speaker, and

wherein the operation of the head-worn personal electronic apparatus being altered concerns control of the audio output being provided to the user.

49. A system as recited in claim 47, wherein the head-worn personal electronic apparatus is configured to support a low power operational mode, and

wherein the operation of the head-worn personal electronic apparatus being altered concerns operation of the head-worn personal electronic apparatus in the low power operational mode.

50. A system as recited in claim 45,

wherein the second microphone is positioned to pick up at least environmental audio input associated with an environment around the head-worn personal electronic apparatus,

wherein the electronic circuitry is configured to process the audio input from at least the user via the first microphone to remove at least a portion of the environmental audio input associated with the environment picked up via the second microphone, and

wherein the head-worn personal electronic apparatus is configured to receive a voice input via the first microphone, determine or receive a determination of a requested operation from the voice input using voice recognition, and control an operation by the head-worn personal electronic apparatus based on the requested operation.

51. A system as recited in claim 45, wherein the radiation detector is an infrared radiation detector, and wherein the radiation being detected by the radiation detector includes infrared radiation.

52. A system as recited in claim 51, wherein the first microphone is positioned to be directed forward towards the user's front when the head-worn structure is being worn by the user, and the second microphone is positioned to be directed outward away from the user's head when the head-worn structure is being worn by the user.

53. A system as recited in claim 52, wherein the head-worn personal electronic apparatus is configured to at least alter operation of the head-worn personal electronic apparatus based at least in part on the determination of whether the head-worn structure of the head-worn personal electronic apparatus is being worn by the user.

54. A system as recited in claim **53**,

wherein the second microphone is positioned to pick up at least environmental audio input associated with an environment around the head-worn personal electronic apparatus,

wherein the electronic circuitry is configured to process the audio input from at least the user via the first microphone to remove at least a portion of the environmental audio input associated with the environment picked up via the second microphone, and

wherein the head-worn personal electronic apparatus is configured to receive a voice input via the first microphone, determine or receive a determination of a requested operation from the voice input using voice recognition, and control an operation by the head-worn personal electronic apparatus based on the requested operation.

55. A system as recited in claim **54**,

wherein the motion detector comprises an accelerometer, and

wherein the system comprises a Hall effect detector.

56. A system as recited in claim **44**, wherein the head-worn personal electronic apparatus comprises:

a force sensor at least partially contained within the head-worn structure and configured to sense a force input associated with the user, wherein the sensed force input operating to at least alter operation of the head-worn electronic personal audio apparatus.

57. A system as recited in claim **56**, wherein the head-worn electronic personal audio apparatus is configured to support audio output to the user via the speaker, and

wherein the at least one operation of the head-worn electronic personal audio apparatus being altered concerns control of the audio output being provided to the user.

58. A system as recited in claim **56**, wherein the head-worn personal electronic apparatus is configured to support voice calls to the user, and

wherein the at least one operation of the head-worn personal electronic apparatus being altered concerns at least accepting or declining a voice call to the user.

59. A system as recited in claim **44**, wherein the first microphone is positioned to be directed forward towards the user's front when the head-worn structure is being worn by the user, and the second microphone is positioned to be directed outward away from the user's head when the head-worn structure is being worn by the user.

* * * * *