US007735475B2

(12) **United States Patent**
Farrell et al.

(10) **Patent No.: US 7,735,475 B2**
(45) **Date of Patent: Jun. 15, 2010**

(54) **FUEL INJECTION BODY SIZED TO REPLACE CARBURETOR BODY**

(76) Inventors: **Kenneth William Farrell**, 920 Shepard Crest Dr., Corona, CA (US) 92882; **Warren Lamont Duff**, 43935 Highlander Dr., Temecula, CA (US) 92592

(*) Notice: Subject to any disclaimer, the term of this patent is extended or adjusted under 35 U.S.C. 154(b) by 76 days.

(21) Appl. No.: **12/234,370**

(22) Filed: **Sep. 19, 2008**

(65) **Prior Publication Data**

US 2009/0145406 A1 Jun. 11, 2009

Related U.S. Application Data

(60) Provisional application No. 60/979,702, filed on Oct. 12, 2007, provisional application No. 61/052,903, filed on May 13, 2008.

(51) **Int. Cl.**
F02M 39/00 (2006.01)
F02M 61/14 (2006.01)

(52) **U.S. Cl.** **123/470**; 123/445; 123/472; 123/336; 123/337; 261/116

(58) **Field of Classification Search** 123/336, 123/337, 445, 470, 471, 472; 261/116
See application file for complete search history.

(56) **References Cited**

U.S. PATENT DOCUMENTS

3,943,904	A *	3/1976	Byrne	123/470
4,212,277	A *	7/1980	Melotti	123/434
4,341,193	A *	7/1982	Bowler	123/472
4,347,823	A *	9/1982	Kessler et al.	123/472
4,372,271	A *	2/1983	Elpern et al.	123/445
4,817,569	A *	4/1989	Takano et al.	123/470
5,012,780	A	5/1991	Bugamelli	
5,205,264	A *	4/1993	Hoffman, Sr.	123/555
5,261,382	A	11/1993	Nikolai	
5,447,140	A *	9/1995	Brisbane et al.	123/456
5,608,632	A *	3/1997	White	701/103
6,467,465	B1 *	10/2002	Lorts	123/527
7,055,513	B1 *	6/2006	Boveia	123/590
2005/0045147	A1 *	3/2005	Ishikawa et al.	123/336

* cited by examiner

Primary Examiner—Erick Solis
(74) *Attorney, Agent, or Firm*—Knobbe, Martens, Olson & Bear, LLP

(57) **ABSTRACT**

A fuel injection unit is designed for replacement of existing carburetors. The fuel injection unit can be sized similarly to the existing carburetor. The fuel injection unit can have concealed fuel injectors. End caps can be provided that overlie the fuel injectors and that contain fuel line connections. The end caps provide an appearance of carburetor fuel bowls while generally concealing the fuel injectors and the associated fluid connections.

16 Claims, 15 Drawing Sheets

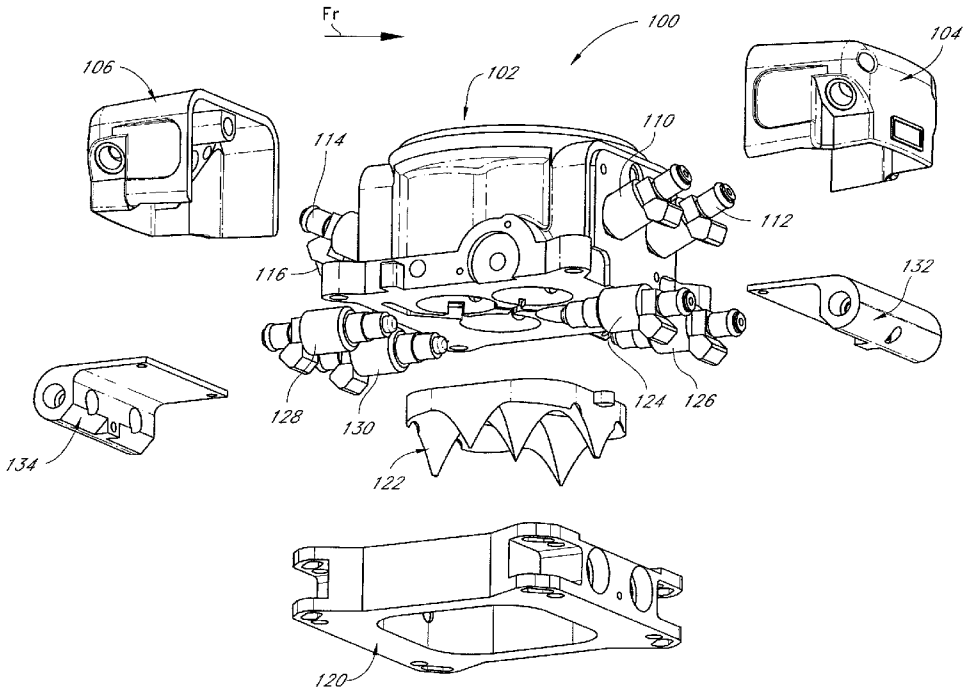

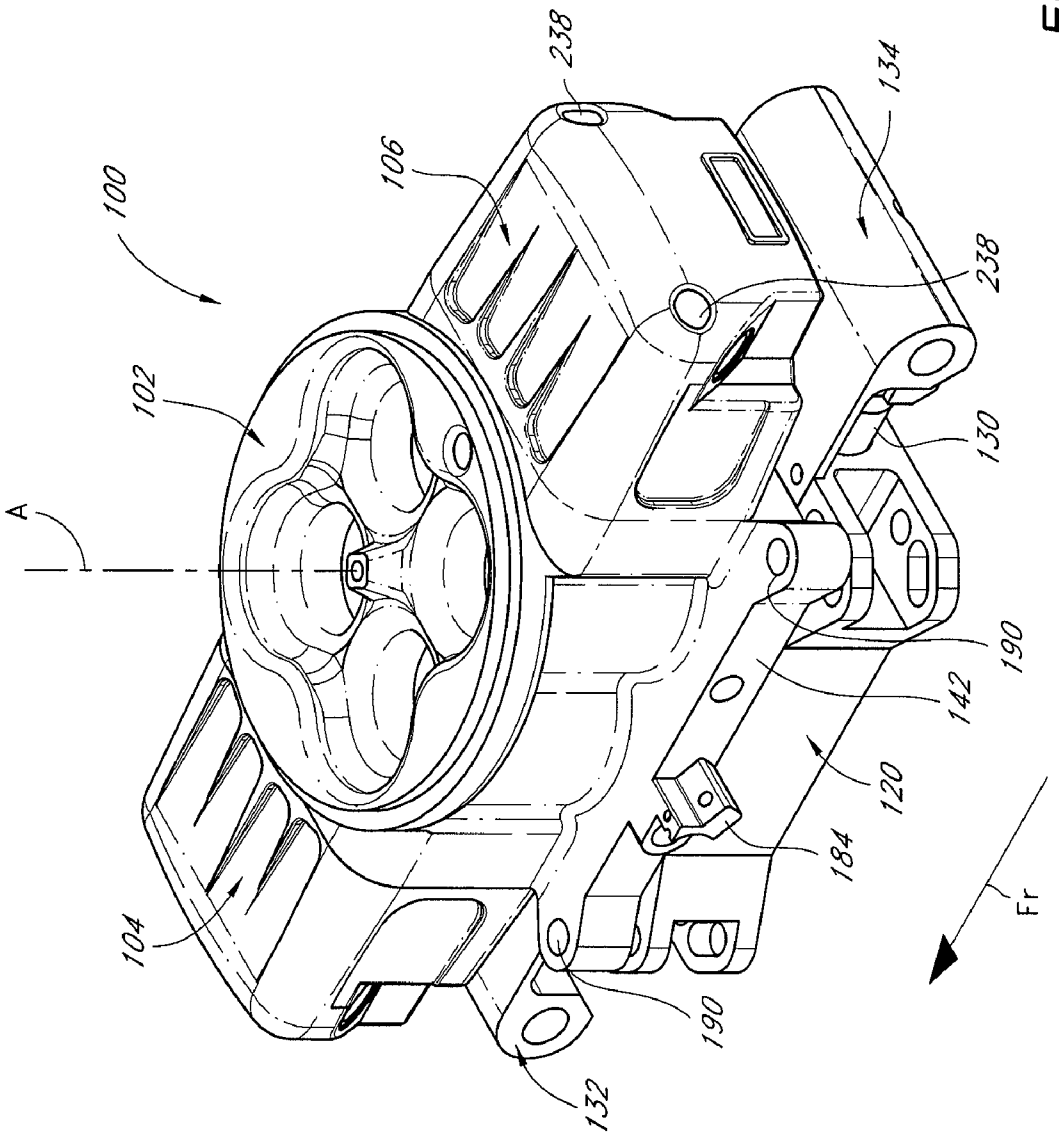

FIG. 1

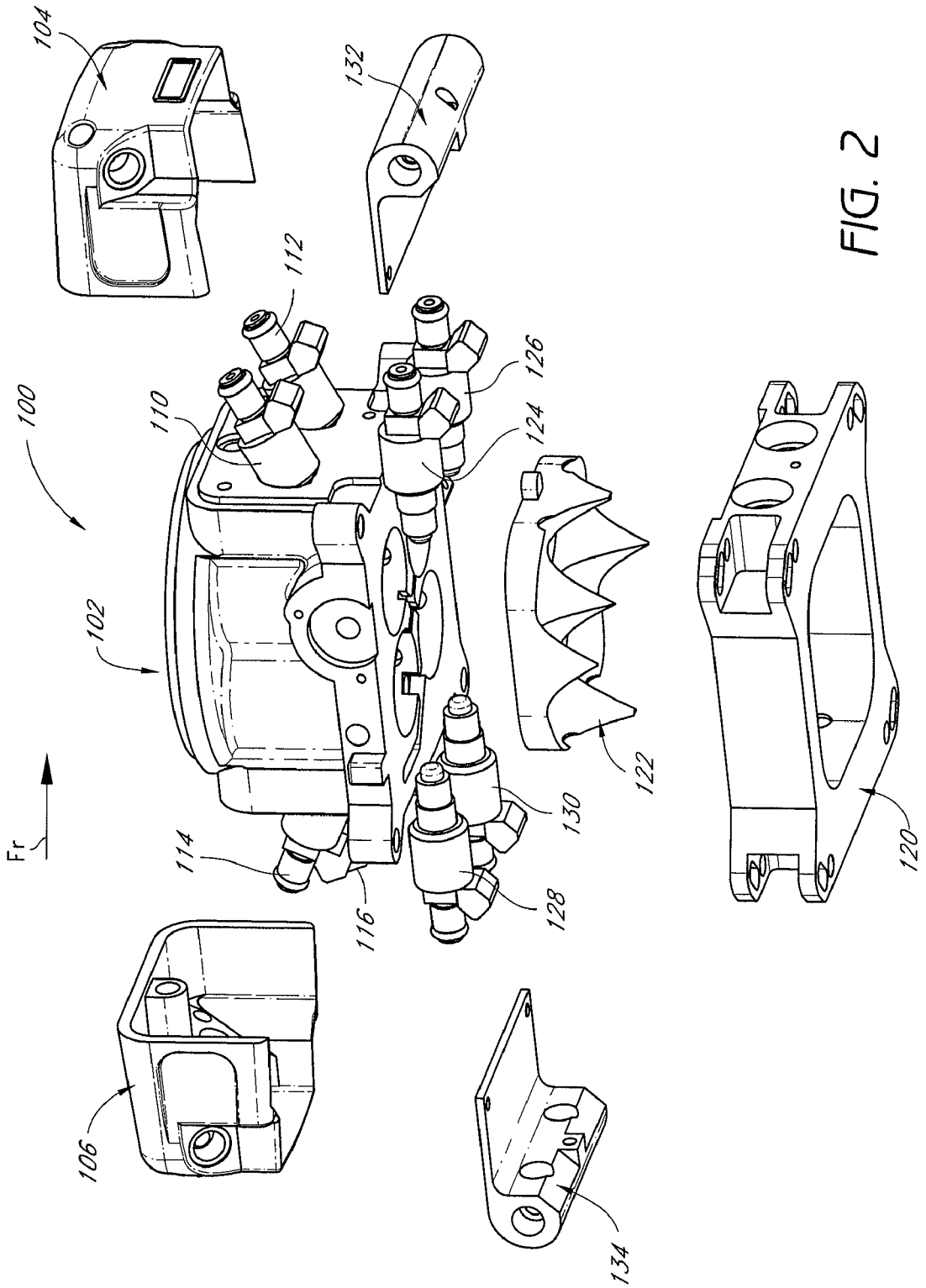
104
132
112
100
110
126
124
102
122
130
Fr
114
116
128
120
106
134

FIG. 2

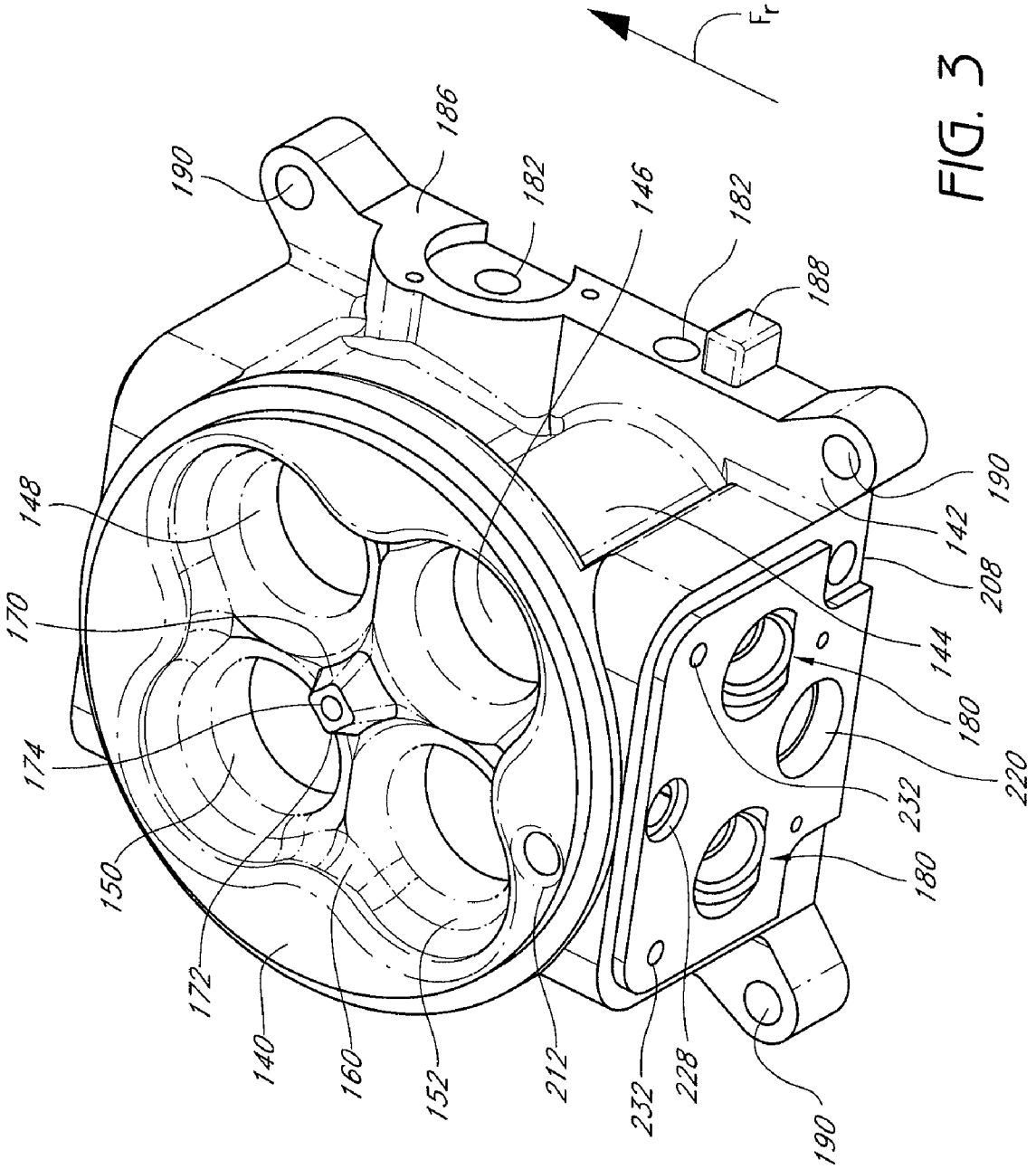
190
186
182
146
182
188
148
170
174
150
172
140
160
152
212
232
228
190
142
208
144
180
220
232
180
190
F_r

FIG. 3

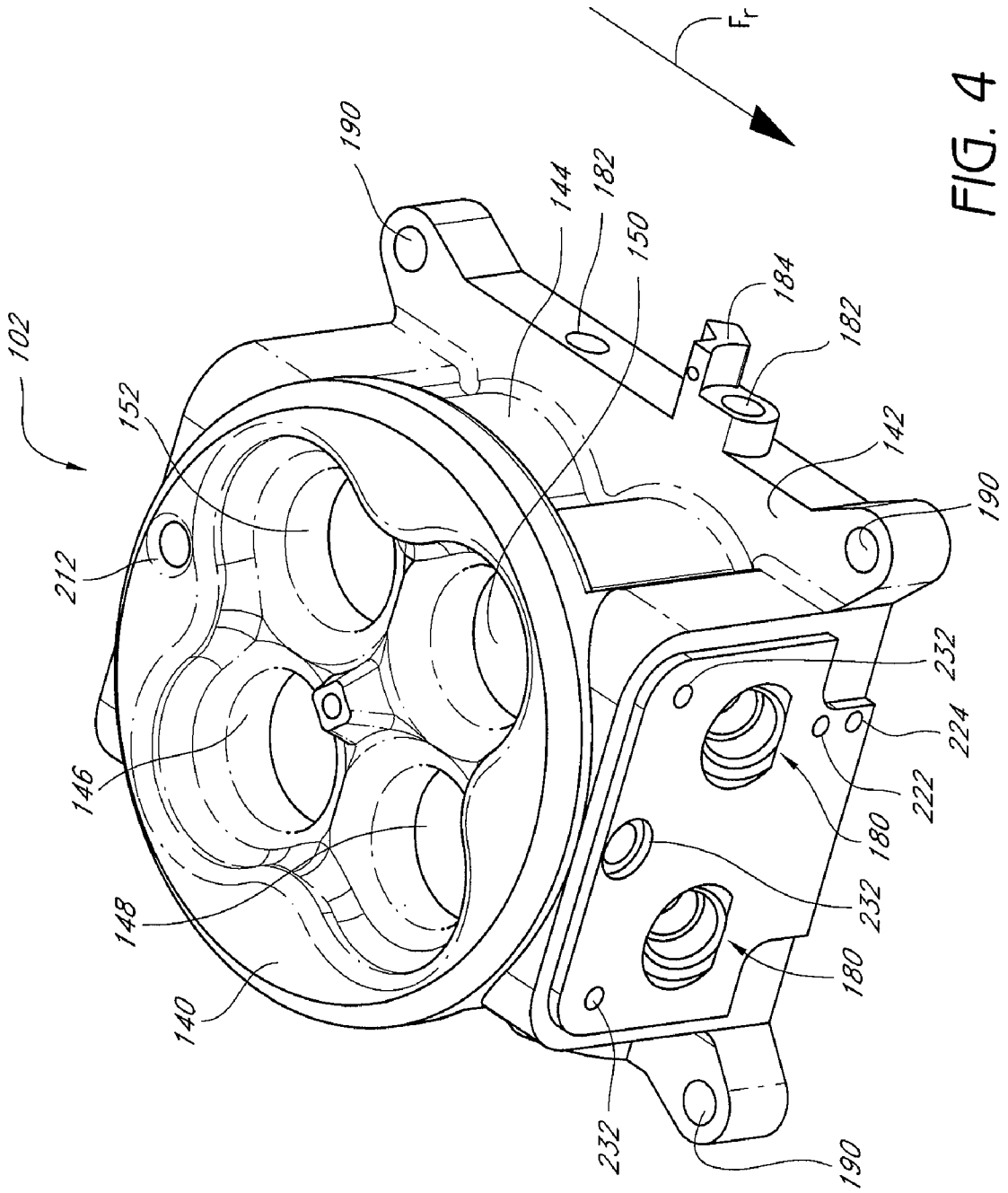
102
152
212
146
148
140
190
144
182
150
184
182
142
190
232
224
222
180
232
180
232
190
F_r

FIG. 4

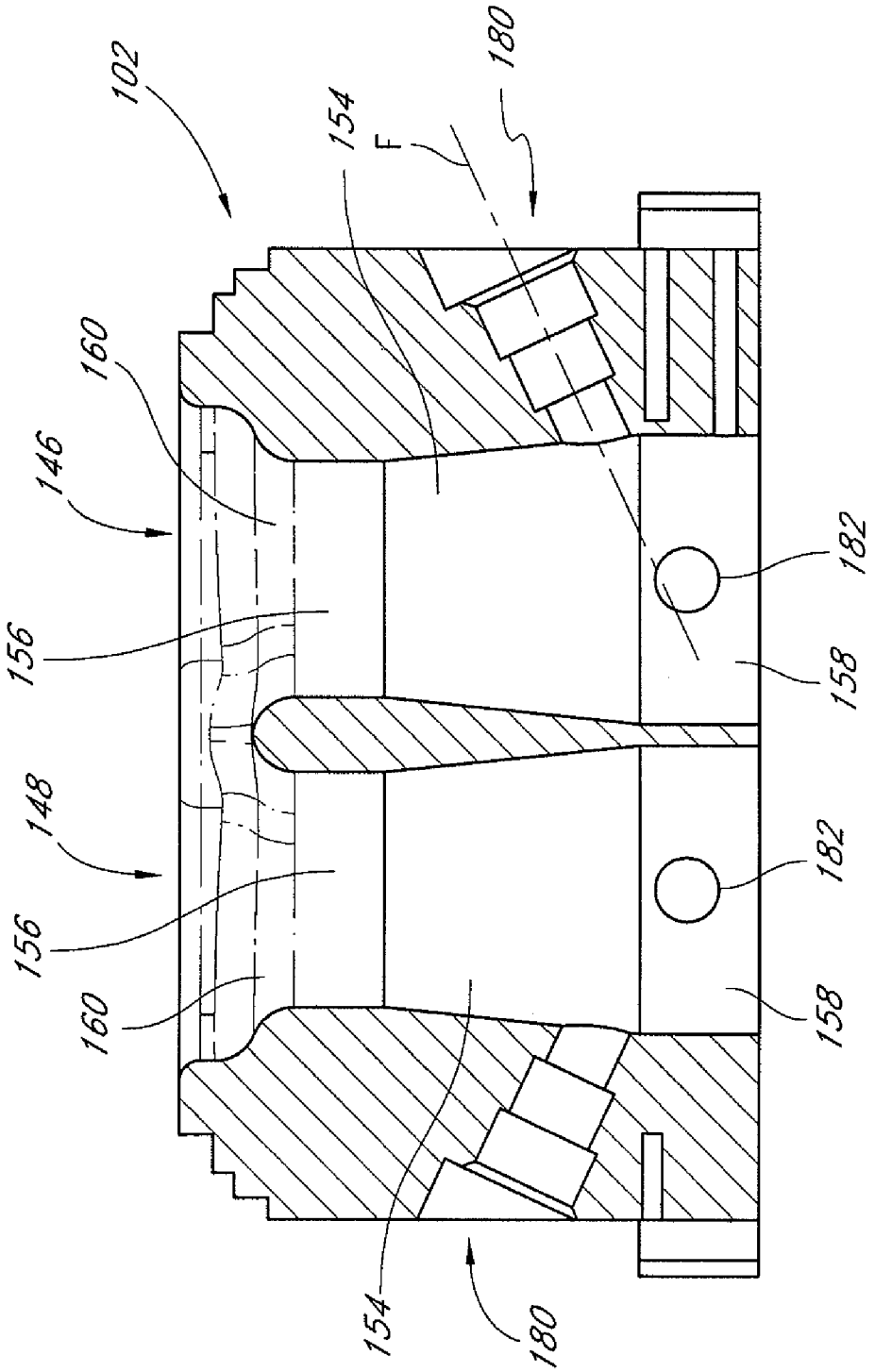

FIG. 5

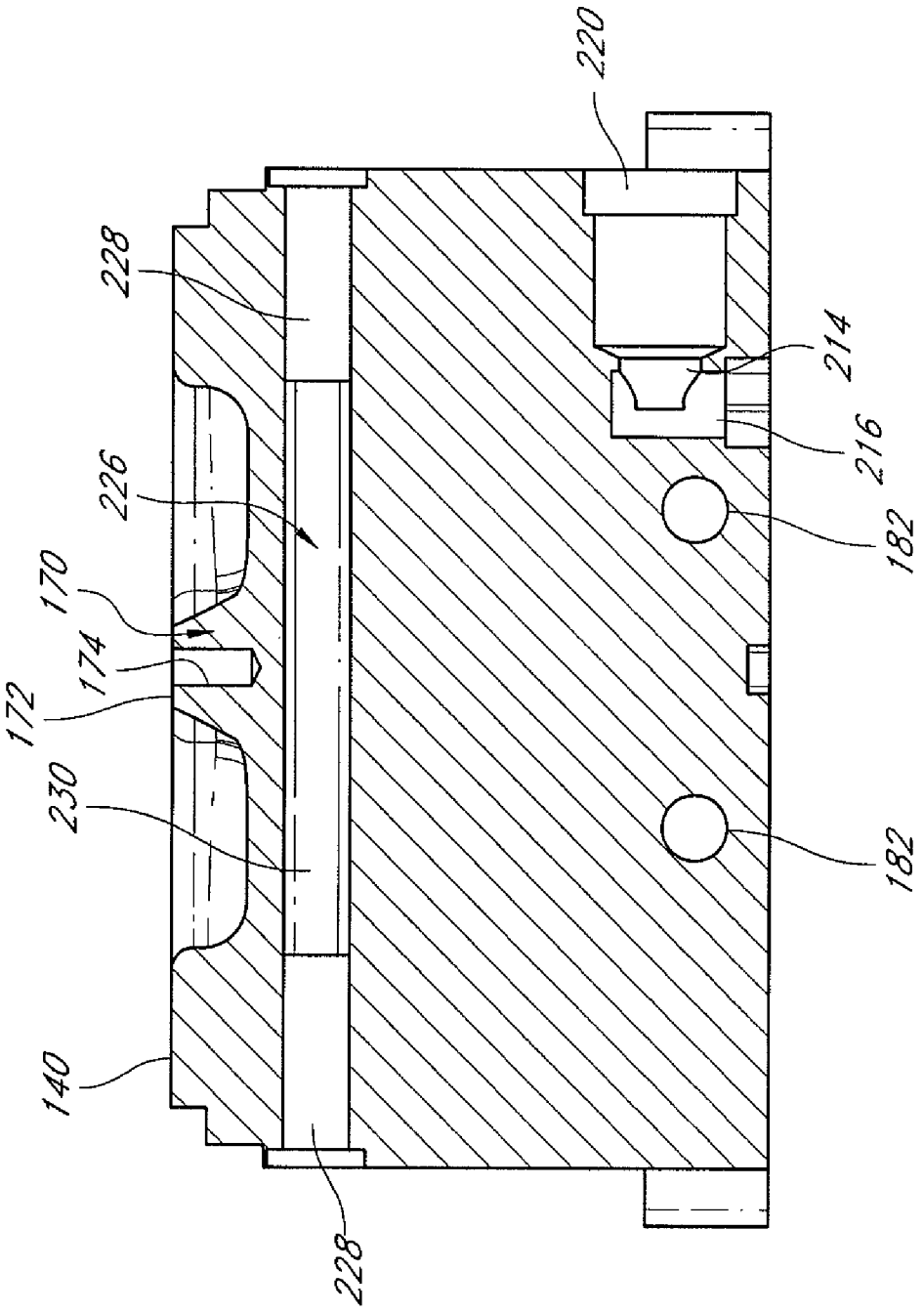

FIG. 6

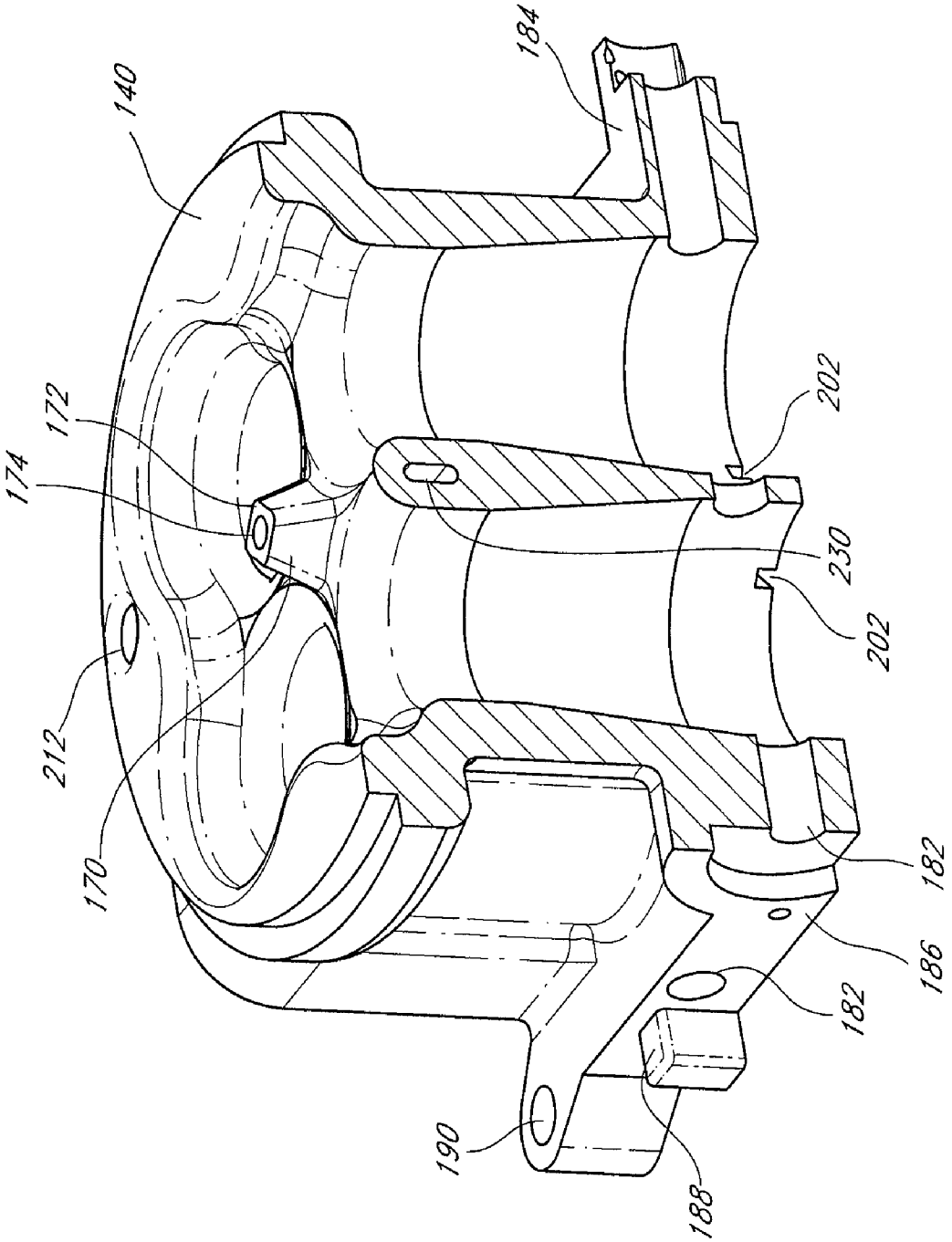

FIG. 7

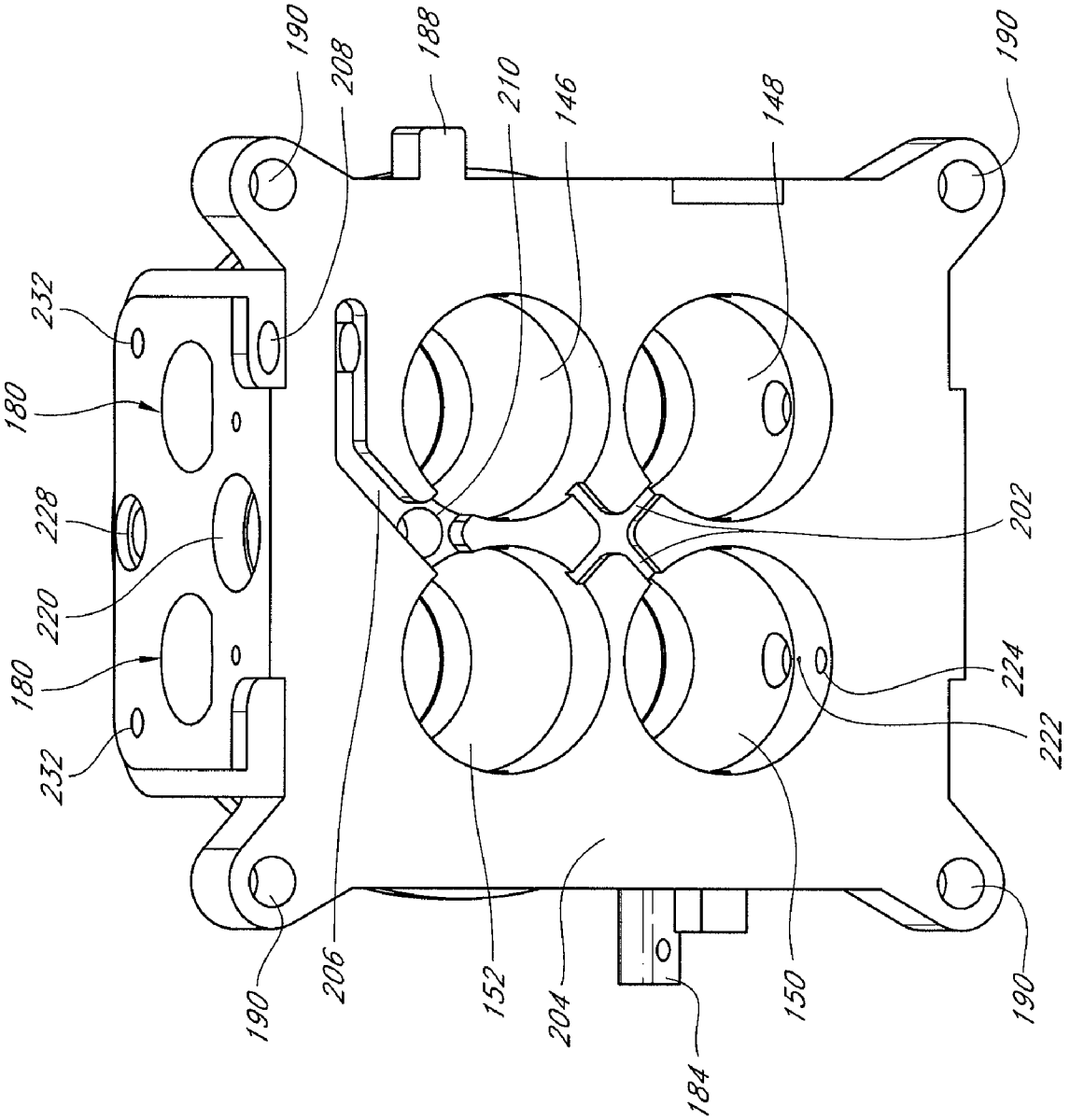
190
208
188
210
146
148
190
232
180
228
220
180
232
202
224
222
190
206
152
204
184
150
190

FIG. 8

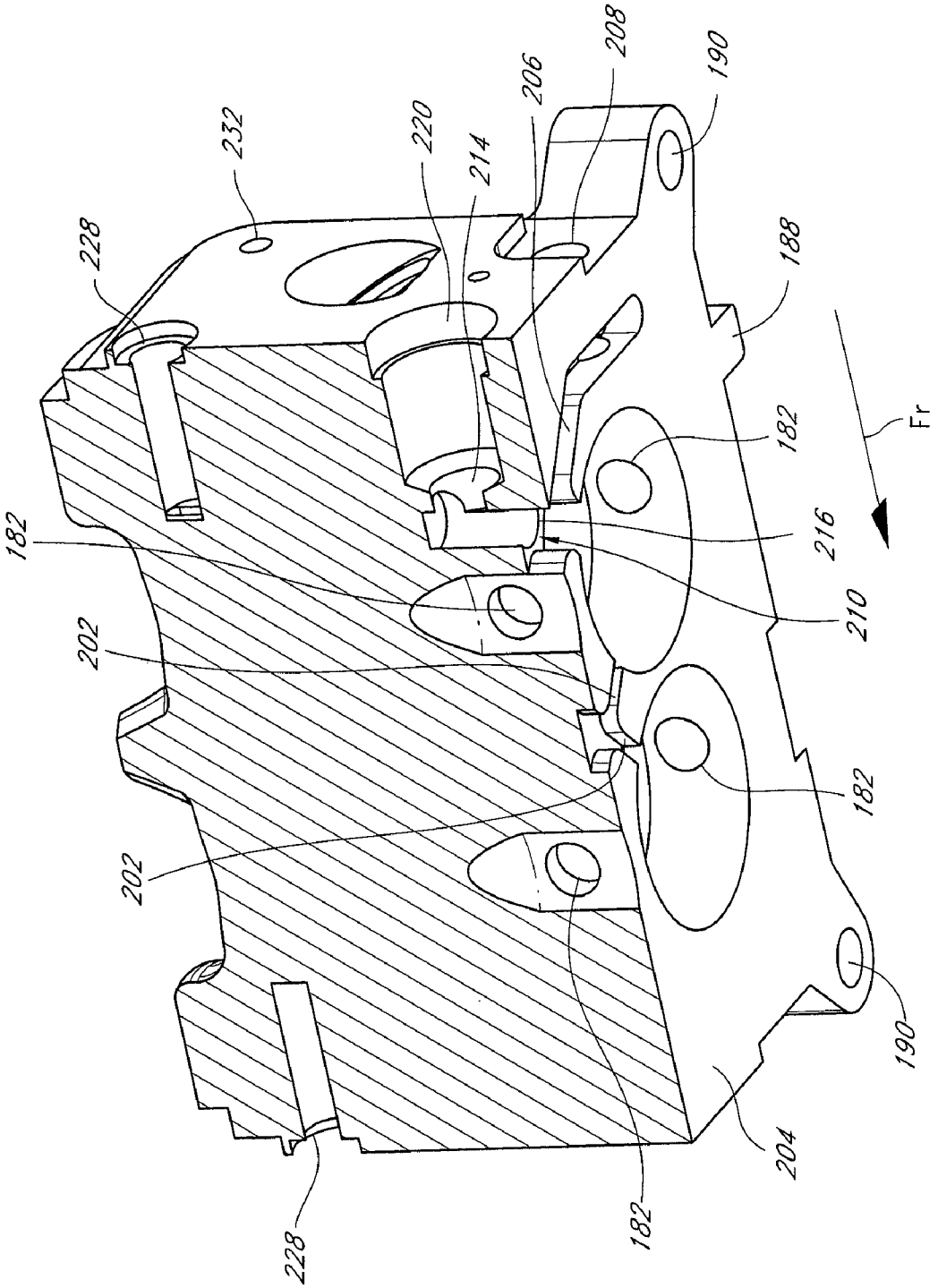
232
228
220
214
206
208
190
188
182
Fr
216
210
182
202
182
202
190
204
182
228

FIG. 9

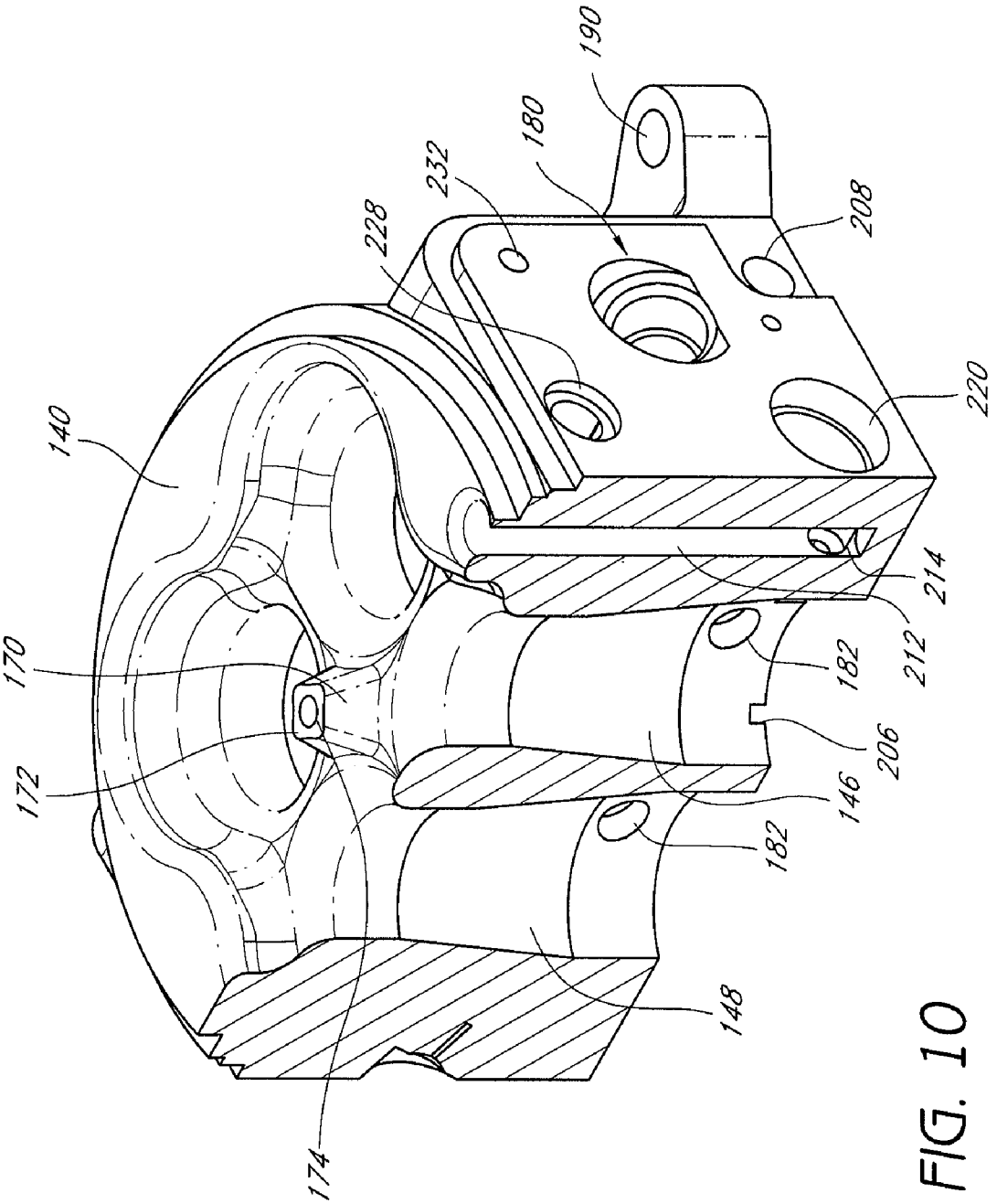
190
180
232
228
208
220
140
214
212
170
182
206
172
146
182
148
174

FIG. 10

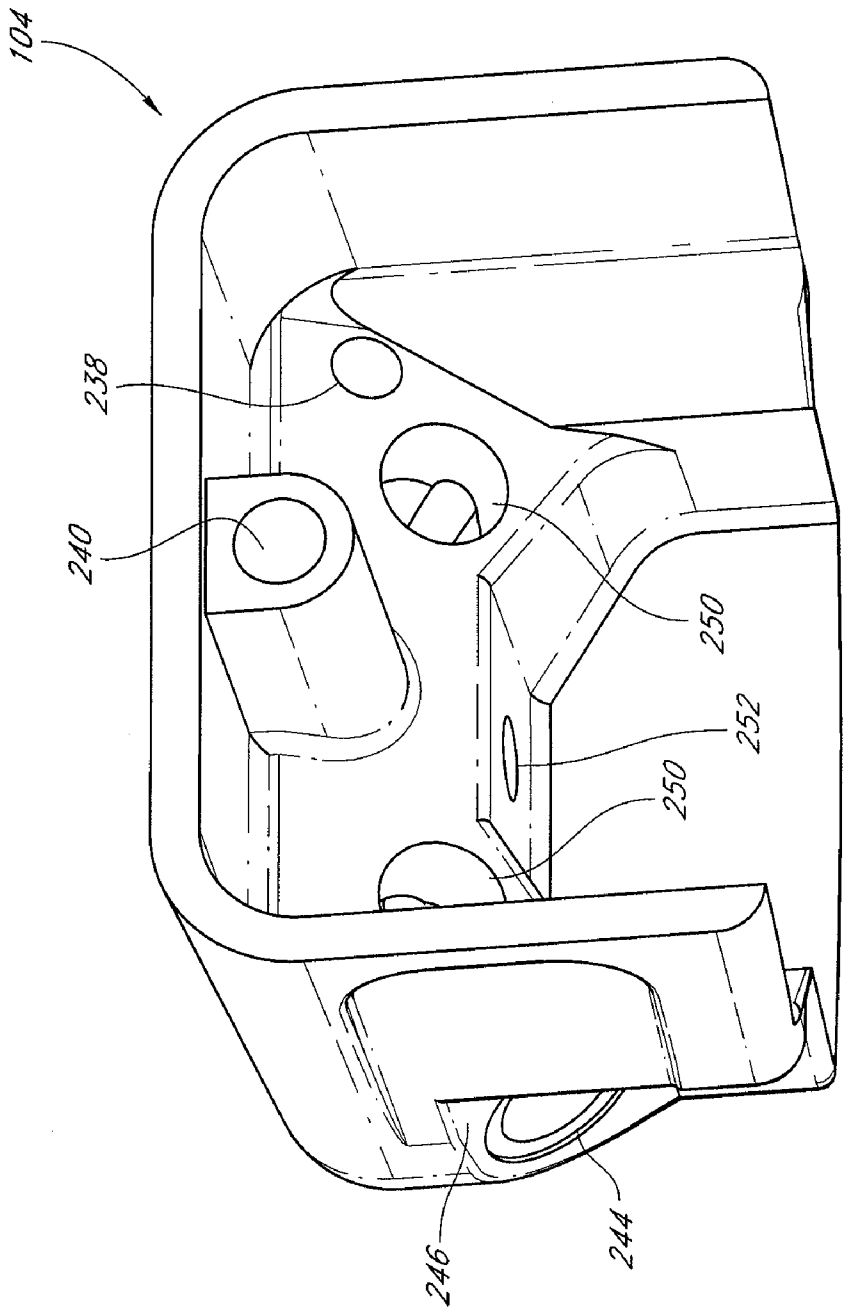

FIG. 11

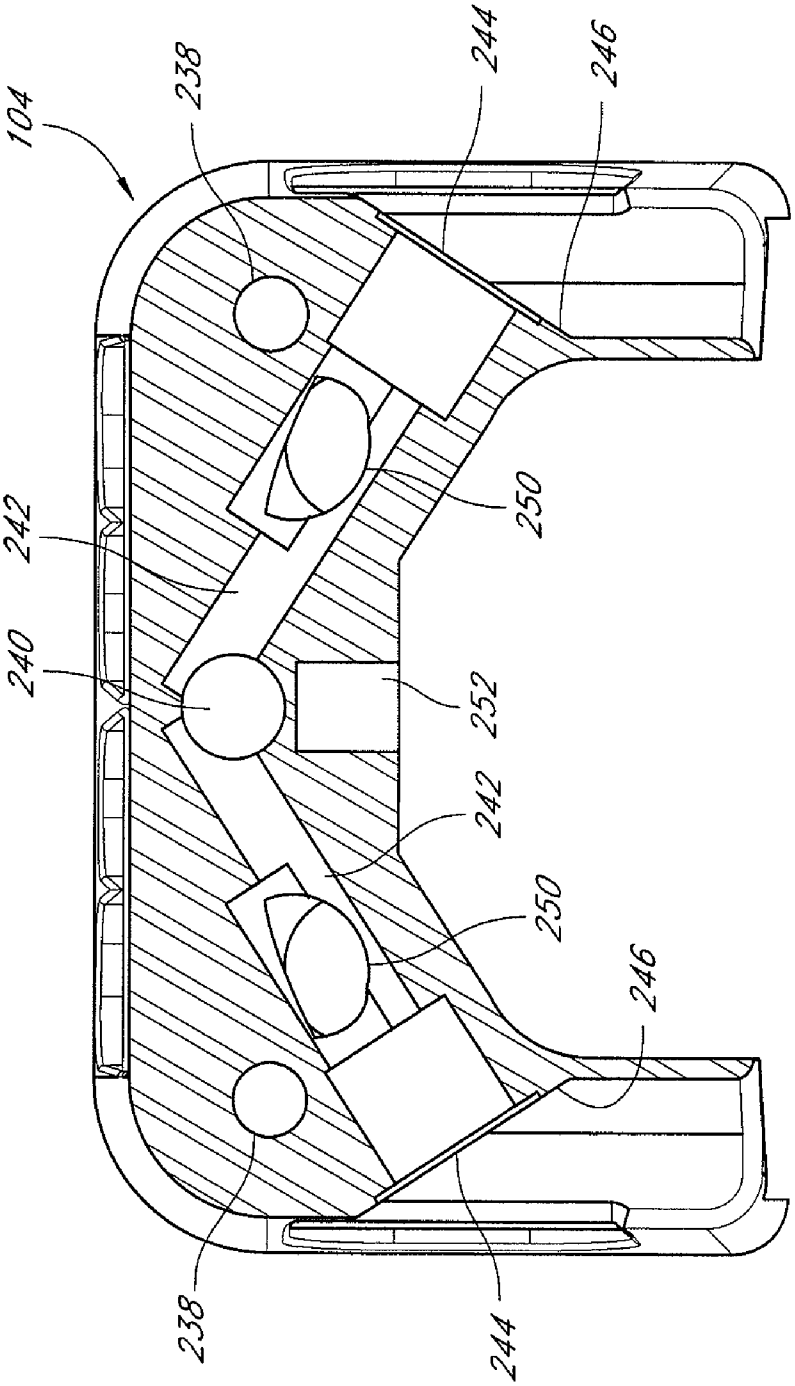

FIG. 12

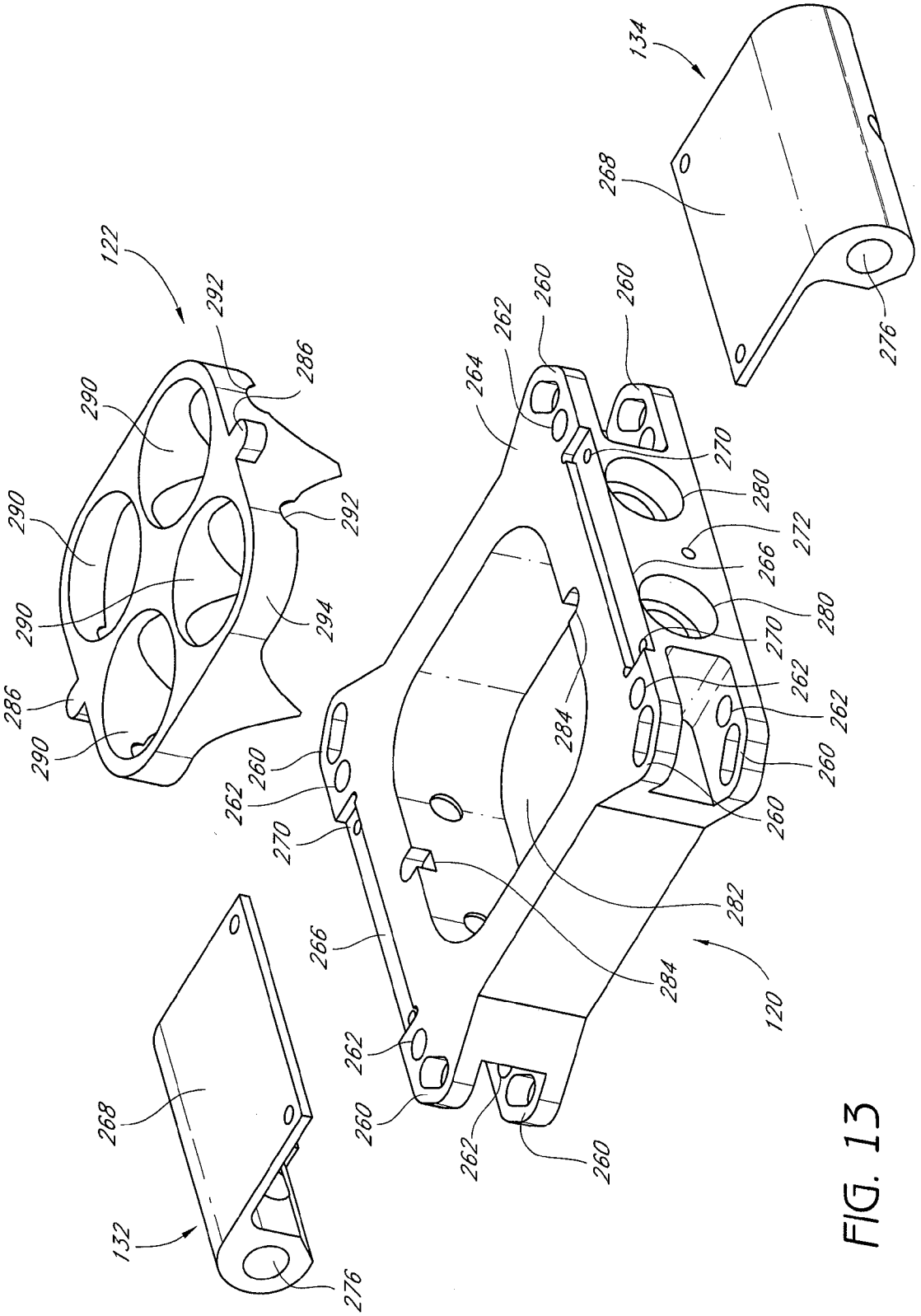
122
134
132
120
260
262
264
266
268
270
272
276
280
282
284
286
290
292
294

FIG. 13

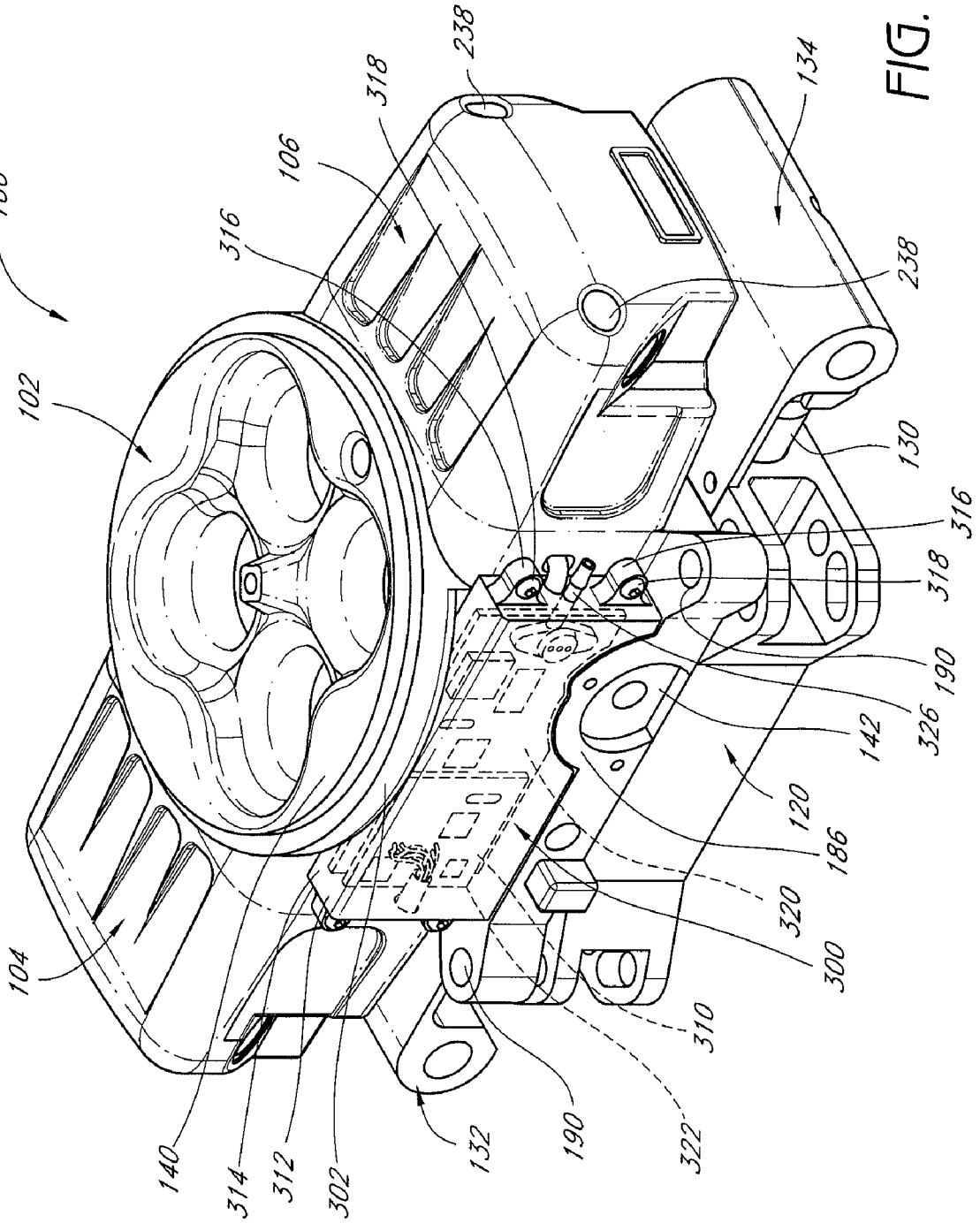
100
102
104
106
130
132
134
140
142
186
190
190
300
302
310
312
314
316
316
318
318
320
322
326
238
238

FIG. 14

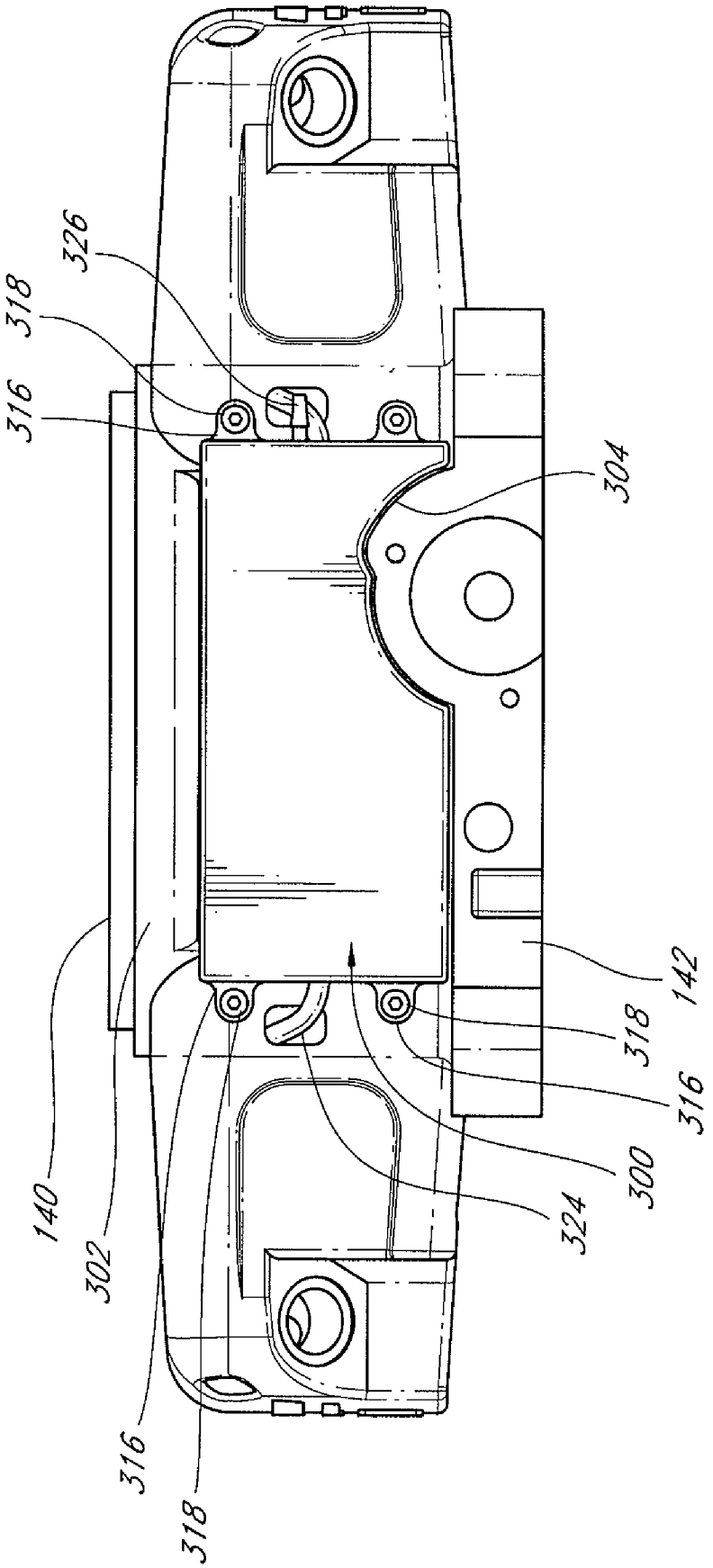

FIG. 15

FUEL INJECTION BODY SIZED TO REPLACE CARBURETOR BODY

CROSS-REFERENCE TO RELATED APPLICATIONS

This application claims the priority benefit under 35 U.S.C. §119(e) of U.S. Provisional Patent Application No. 60/979,702, filed on Oct. 12, 2007 and U.S. Provisional Patent Application No. 61/052,903, filed on May 13, 2008, which are hereby incorporated by reference in their entirety.

BACKGROUND OF THE INVENTION

1. Field of the Invention

The present invention generally relates to fuel injection systems for motor vehicles. More particularly, the present invention relates to such systems that are sized and configured to replace a carburetor.

2. Description of the Related Art

Carbureted automobiles ceased to be manufactured in large numbers. The carburetor was replaced with electronic fuel injection (EFI), which has become the standard of the auto manufacturing industry. The hot rod industry and the aftermarket industry in general are beginning to accept EFI as an alternative to carburetion.

EFI has a number of performance advantages. For example, a computer-controlled engine is easier to start and is more drivable. The engine operates with less hesitation and reduced incidences of stalling. Moreover, EFI provides increased fuel efficiency and reduced emissions. An EFI engine can respond more quickly and precisely to the changing boost levels of turbochargers or superchargers. Furthermore, EFI engines are more consistent when operating around steep inclines and over bumpy terrain.

SUMMARY OF THE INVENTION

Even with the performance advantages of EFI engines, the hot rod industry and the aftermarket industry in general still crave the sleek wireless appearance of a carbureted engine.

Thus, one aspect of the present invention involves a fuel injection unit comprising a main throttle body. The main throttle body comprises a first side surface, a second side surface, a top surface generally extending between the first side surface and the second side surface, and a bottom surface generally extending between the first side surface and the second side surface. A first end cap can be secured to the first side surface and a second end cap can be secured to the second side surface. A first air passage extends between the top surface and the bottom surface and a second air passage extends between the top surface and the bottom surface. A first fuel injector extends through the first side surface toward the first air passage and the first fuel injector is generally covered by the first end cap. A second fuel injector extends through the second side surface toward the second air passage and the second fuel injector is generally covered by the second end cap.

Another aspect of the present invention involves an auxiliary fuel injector plate. The auxiliary fuel injector plate comprises a top surface, a bottom surface spaced from and generally parallel to the top surface and a central passageway extending from the top surface to the bottom surface. An adaptor is positioned within the central passageway. The adaptor comprises a plurality of openings. A first fuel injector extends into the central passageway. A first fuel rail is mounted to the auxiliary fuel injector plate and extends laterally outward from the auxiliary fuel injector plate. The first fuel rail defines a fuel passage that is in fluid communication with the first fuel injector.

BRIEF DESCRIPTION OF THE DRAWINGS

These and other features, aspects and advantages of the present invention will now be described with reference to the drawings of a preferred embodiment, which embodiment is intended to illustrate and not to limit the present invention.

FIG. **1** is a perspective view of a fuel injection unit that is arranged and configured in accordance with certain features, aspects and advantages of the present invention.

FIG. **2** is an exploded perspective view of the fuel injection unit of FIG. **1**.

FIG. **3** is a perspective view of a throttle body of the fuel injection unit of FIG. **1**.

FIG. **4** is another perspective view of the throttle body of FIG. **3**.

FIG. **5** is a sectioned view of the throttle body of FIG. **3**.

FIG. **6** is another sectioned view of the throttle body of FIG. **3**.

FIG. **7** is a further sectioned view of the throttle body of FIG. **3**.

FIG. **8** is a bottom perspective view of the throttle body of FIG. **3**.

FIG. **9** is a further sectioned view of the throttle body of FIG. **3**.

FIG. **10** is a sectioned view of the throttle body of FIG. **3**.

FIG. **11** is a view of an end cap of the fuel injection unit of FIG. **1**.

FIG. **12** is a sectioned view of the end cap of FIG. **11**.

FIG. **13** is an exploded perspective view of an auxiliary injector plate of the fuel injection unit of FIG. **1**.

FIG. **14** is a perspective view of an assembly showing the throttle body of FIG. **1** with a small computer mounted to the throttle body.

FIG. **15** is a side view of the assembly of FIG. **15**.

DETAILED DESCRIPTION OF THE PREFERRED EMBODIMENT

With reference initially to FIG. **1**, a fuel injection body **100** is shown in perspective view. The fuel injection body **100** advantageously is sized and configured to replace a carburetor, such as a standard 4150 double pumper carburetor. As will be described, the fuel injection body advantageously can be bolted to most factory and after-market manifolds. In a few instances, such as applications involving spread bore manifolds, adaptor plates can be obtained from any suitable source.

With reference to FIG. **2**, the fuel injection body **100** is shown in an exploded view. It should be noted that FIG. **2** shows the fuel injection body **100** after being rotated about 180 degrees about a generally vertical axis A relative to the view of FIG. **1**. As shown, the fuel injection body **100** comprises a main throttle body **102**, a first end cap **104** and a second end cap **106**. Each of the end caps **104**, **106** generally covers two fuel injectors, for a total of four fuel injectors **110**, **112**, **114**, **116**, that are mounted to the main throttle body **102**.

With continued reference to FIGS. **1** and **2**, an injector plate **120** can be mounted adjacent to the fuel injection body **100**. As will be discussed below in greater detail, an adaptor **122** can be formed separately of, or integrally with, the injector plate **120** and can be positioned within at least a portion of the injector plate **120**. Four fuel injectors **124**, **126**, **128**, **130** can be mounted to the injector plate **120**. In the illustrated con-

figuration, a first fuel rail **132** is connected to two of the fuel injectors **124**, **126** while a second fuel rail **134** is connected to the other two of the fuel injectors **128**, **130**.

Having introduced the basic components of the fuel injection body, each of the components will be described in greater detail starting with the main throttle body **102**. With reference to FIGS. **3** and **4**, the illustrated throttle body **102** is generally cubic in configuration. A top surface **140** of the throttle body **102** is generally circular or cylindrical in configuration when viewed from the top. A lower flange **142** is generally square when viewed from the bottom. Other configurations can be used. The top surface **140** and the lower flange **142** are spaced apart by a main portion **144** of the main throttle body **102**.

Four passages **146**, **148**, **150**, **152** extend through at least a majority of the main portion **144** from the top surface **140** through the lower flange **142**. As shown in the cross-section of FIG. **5**, each of the passages **146**, **148**, **150**, **152** preferably comprises an expanding portion **154** that extends between a generally cylindrical upper portion **156** and a generally cylindrical lower portion **158**. The profile of each of the passages **146**, **148**, **150**, **152** preferably defines a venturi in cooperation with a recess **160** formed by entrances into the passages **146**, **148**, **150**, **152**. The venturi consists of a generally tubular shape that is generally constricted in the middle and that is flared at both ends. Air flowing through the venturi will increase in velocity through the constricted portion and the air pressure will drop while passing through the constricted portion. The venturi can be bored out to approximately 1000 cfm in some embodiments.

In the illustrated configuration, the clover shaped recess **160** (see FIG. **3**) is disposed between the top surface **140** and the passages **146**, **148**, **150**, **152**. The recess **154** provides an attractive appearance while also generally defining four surfaces that taper the from a larger diameter down to a diameter of the corresponding passages **146**, **148**, **150**, **152**.

With reference now to FIG. **3** and FIG. **6**, a mounting boss **170** is provided generally centrally among the passages **146**, **148**, **150**, **152**. The mounting boss **170** preferably has an upper surface **172** that is generally flush with the upper surface **140**. The mounting boss **170** generally comprises a threaded opening **174**. The threaded opening **174** can receive a threaded rod (not shown) or the like such that an air cleaner or other auxiliary structures can be secured to the fuel injection body **100**. Other arrangements for mounting an air cleaner or the like also can be used.

With reference to FIG. **3** and FIG. **6**, each passageway **146**, **148**, **150**, **152** intersects with a fuel injector receptacle **180**. The receptacles **180** can have any desired configuration and orientation. Preferably, each of the receptacles **180** extends from a side surface of the main throttle body **102** into a corresponding one of the passageways **146**, **148**, **150**, **152**. In the illustrated configuration, the receptacles **180** are angled downward toward the lower cylindrical portions **158** of the passageways. Preferably, as shown in FIG. **5**, a centerline F of each receptacle **180** extends at an angle downward and is positioned such that the centerline F extends to a location just above a throttle valve shaft aperture **182**. In this manner, the fuel injectors direct fuel to cover upper surface the throttle blade to improve fuel atomization. In one configuration, the fuel injectors will be mounted at about 23 degrees. Other configurations are possible. As also shown in FIG. **5**, the receptacle **180** preferably is defined as a multiple step bore. Other configurations and orientations are possible depending upon the application.

With reference now to FIG. **7**, two throttle shaft apertures **182** are shown, which apertures **182** preferably extend fully through the main throttle body **102**. The apertures **182** can be sized and configured to accommodate a throttle shaft, which is attached to suitable throttle valve, such as a throttle plate or the like. The throttle shafts will be rotatable within the throttle shaft apertures **182**.

The apertures **182** preferably are positioned within the portion of the main throttle body **102** containing the lower flange **142** but other positions are possible. A throttle linkage (not shown) can be secured to the left side of the lower flange **142**. In the illustrated configuration, a throttle linkage mount **184** (see FIG. **1**) is provided. Preferably, the throttle linkage mount **184** is provided to the forward throttle shaft and, therefore, is positioned proximate the left side of the forward aperture **182**. As shown in FIGS. **3** and **7**, for example, a throttle position sensor mount **186** can be provided proximate the right forward aperture **182**. Any suitable throttle position sensor (not shown) can be mounted to the throttle position sensor mount **186**. With continued reference to FIG. **7**, an adjustment mount block **188** also can be provided along the right side of the main throttle body **102**. A portion of the throttle linkage can be secured to the right side of the main throttle body **102**, which portion can comprise a secondary adjustment screw used to adjust an idle speed of the associated engine.

With reference to FIGS. **1** and **3**, the lower flange **142** preferably comprises mounting holes **190**. The mounting holes **190** can be positioned in locations determined by generally standard locations used in the engine arts. The mounting holes **190** also can be formed in portions of the lower flange **142** that define ears or the like such that sufficient material surrounds the holes **190** to provide a stable mounting configuration.

With reference now to FIGS. **8-10**, the throttle body **102** comprises a vacuum passage **200**. The vacuum passage **200** comprises a pair of communication passages **202** that cross each other. Each of the communication passages **202** extends between two of the passages **146**, **148**, **150**, **152** such that the four passages **202** are placed into fluid communication. Any other suitable interconnecting structures can be used. Advantageously, the passages **202** are formed on a lower surface **204** of the throttle body **102**. Such a position simplifies the manufacture of the throttle body.

With reference to FIG. **9**, at least one and preferably at least two of the passages **146**, **152** are connected to a vacuum outlet passage **206**. As shown in FIG. **9**, at least a portion of the vacuum outlet passage **206** preferably is formed in the lower surface **204** of the throttle body. The illustrated vacuum outlet passage **206** extends to a direct vacuum outlet **208**, to which a fitting (not shown can be connected). In the illustrated configuration, the direct vacuum outlet **208** will be positioned facing the rear direction of the throttle body **102** and the direct vacuum outlet **208** will be larger than two other vacuum outlets described below. In one preferred configuration, the direct vacuum outlet **208** can be connected to power brakes and/or a positive crankcase ventilation system (PCV).

With continued reference to FIG. **9**, an idle air control passage **210** also can be connected directly to at least one, and more preferably to at least two of the passages **146**, **152**. The idle air control passage **210** comprises an idle air inlet passage **212** (see FIG. **10**), an idle air control valve passage **214** (see FIG. **9**) and an idle air outlet passage **216** (see FIG. **9**). An idle air control valve mount **220** can be positioned such that an idle air control valve (not shown) can be secured in the mount **220** to control air flow through the idle air control passage **210**. Any other suitable configuration can be used.

In the illustrated configuration, the idle air inlet passage **212** extends between the top surface **140** and a location within the throttle body **102**. The air inlet passage **212** can have other

configurations. The illustrated air inlet passage **212**, however, advantageously is easy to manufacture. Moreover, in the illustrated configuration, an axis of the air inlet passage **212** is offset from the idle air outlet passage **216**.

With reference now to FIG. **8**, a first vacuum passage **222** and a second vacuum passage **224** extend from one or more of the passages **146**, **148**, **150**, **152**. In the illustrated configuration, the first and second vacuum passages **222**, **224** extend from the passage **150**, which is not directly communicating with the vacuum outlet passage **206**. Moreover, in the illustrated configuration, the lower or second vacuum passage **224** has a larger diameter at the end that intersects the passage **150** relative to the upper or first vacuum passage **222**.

A port (not shown) preferably is connected to each of the first and second vacuum passages **222**, **224** on the outside surface of the throttle body **102**. The ports can be 3/16 of an inch in one configuration. Preferably, the ports can be used to connect the throttle body **102** to vacuum accessories and to a MAP sensor. More preferably, the lower port, which corresponds to the larger second vacuum passage **224**, is a direct vacuum connection that can be connected to the MAP sensor. When used with a boosted engine, a zip tie or the like can be used to secure a MAP hose to reduce the likelihood of the hose being blown off of the port. The upper port, which corresponds to the smaller first vacuum passage **222**, is a ported vacuum connect that can be connected to vacuum advance distributors and automatic transmissions (i.e., using a tee splitter or the like, where desired).

With reference to FIG. **6**, the throttle body **102** advantageously comprises a crossover fuel passage **226**. The crossover passage **226**, as will be explained, allows fuel to be passed from one side of the fuel injection body **100** to the other side. Thus, fuel can be supplied from fuel lines to either end of the fuel injection body **100** with fuel being passed through the crossover passage **226** to the other end of the fuel injection body **100**. The illustrated crossover passage **226** comprises generally cylindrical ends **228** and an oblong cross-section through its central portion **230** (see FIG. **7**). The oblong central portion **230** allows the passage **226** to extend between the air passages **146**, **148**, **150**, **152**. Other configurations can be used.

With reference again to FIG. **1** and FIG. **2**, the throttle body **102** is connected to the first end cap **104** and the second end cap **106**. Threaded openings **232** are provided on the ends of the throttle body **102** so that threaded fasteners (not shown) can be used to secure the end caps **104**, **106** to the throttle body **102**. Other configurations also can be used.

The end caps **104**, **106** preferably are substantially identical to each other. By forming the end caps **104**, **106** to be identical, manufacturing costs can be reduced and manufacturing and assembly can be simplified. Other configurations also can be used.

With reference now to the perspective view of FIG. **11**, one of a pair of mounting holes **238** is shown. The mounting holes **238**, also shown in FIG. **1**, for instance, receive the threaded fasteners (not shown) that thread into the threaded openings **232** provided on the ends of the throttle body **102**. The mounting holes **238** can have any suitable configuration. In the illustrated configuration, the mounting holes **238** are countersunk such that the threaded fasteners (not shown) can be substantially concealed within the mounting holes **238**. In other configurations, the mounting holes **238** can be arranged and configured to expose the ends of the threaded fasteners for aesthetic reasons.

With continued reference to FIG. **11**, a crossover connector passage **240** is shown. One end of the connector passage **240** joins with the crossover passage **226**. The other end of the connector passage **240** extends into a fuel line housing portion of the end cap **104**. In particular, as shown in the cross-section of FIG. **12**, the connector passage **240** generally extends to an intersection of two inclined fuel distribution passages **242**, **242**. Other configurations also can be used.

Each of the illustrated inclined fuel distribution passages **242**, **242** extends upward at an angle from a fuel introduction port **244** to the connector passage **240**. While the illustrated configuration features inclined fuel distribution passages **242**, **242**, other configurations are possible. The illustrated configuration, however, provides a pleasing aesthetic appearance. As illustrated, the fuel introduction ports **244** are positioned on a downwardly and outwardly facing surface **246**. Other placements also can be used.

With continued reference to FIG. **12**, a fuel injector supply port **250** can be positioned along each of the fuel distribution passages **242** at a location between the fuel introduction port **244** and the connector passage **240**. Thus, fuel supplied to the fuel distribution passages **242** can be supplied to the fuel injectors **110**, **112**, **114**, **116**. In the illustrated configuration, a returnless system can be provided. The returnless system typically would comprise a fuel supply hose being connected to one of the fuel introduction ports **244** with the remaining fuel introduction ports **244** being capped of with a suitable plug. Thus, fuel would pass from the fuel introduction port through the fuel distribution passages of one end cap **104**, through the associated connector passage **240**, through the crossover passage **226**, through the other connector passage **240**, and into the fuel distribution passages **242**, **242** of the other end cap **106**, for instance. The fuel in the four fuel distribution passages **242** would then be supplied to the fuel injectors **110**, **112**, **114**, **116**.

Thus, in the preferred configuration, the fuel supply system advantageously is fully integrated into the fuel injection body **100** without the need for external fuel hoses with the exception of a supply hose and, in some configurations, a return hose (e.g., in greater than 500 horsepower applications). Moreover, in the illustrated configuration, the fuel supply hose can be mounted to either the front or rear fuel introduction ports **244** on either side of the fuel injection body **100**. In some configurations, two fuel supply hoses can be used to provide fuel separately to each of the end caps **104**, **106** in a dual feed configuration.

A fuel pressure sensor (not shown) can be directly mounted to the fuel supply system discussed directly above. In one configuration, a port **252** can open into the connector passage **240** at a location generally corresponding to the intersection of the connector passage **240** with the fuel distribution passages **242**. Thus, the fuel pressure sensor can be mounted directly to the fuel supply system of the fuel injection body **100**. Advantageously, by positioning the port in the illustrated configuration, the fuel pressure sensor can be concealed from view once the fuel injection body **100** has been mounted to an engine, which concealed location renders an improved appearance for the fuel injection body.

With reference now to FIG. **13**, the auxiliary injector plate **120** preferably provides a structure to which four auxiliary fuel injectors and the associated fuel supply system can be coupled to the main throttle body **102** of the fuel injection body **100**. As illustrated, the injector plate **120** preferably comprises four spaced pairs of slotted openings **260**. The slotted openings **260** allow rotation in the mounting orientation of the throttle plate while still matching the openings. In other words, the slots facilitate mounting of the plate **120** in any orientation (e.g., side to side or front to back). The plate

also acts as an adaptor for bolting to a variety of aftermarket intake manifolds. Mounting holes **262** also are provided in spaced pairs.

With continued reference to FIG. **13**, an upper surface **264** of the plate **120** preferably comprises a pair of mounting recesses **266**. The mounting recesses **266** are sized and configured to receive a portion of the associated fuel rail **132**, **134**. A mounting plate **268** of the fuel rail **132**, **134** can be secured within the mounting recess **266** through threaded fasteners or the like. The mounting plate **268** can be a single component that extends the length of the fuel rail **132**, **134** or it can be two or more fingers that extend outward from the plate **120**. In the illustrated configuration, threaded holes **270** are provided on the plate **120** that receive threaded fasteners (not shown). Other mounting configurations also can be used. A third threaded hole **272** extends generally normal to the other threaded holes **270** and the third threaded hole **272** also is used to secure the associated fuel rail **132**, **134** in position.

The plate **120** defines four fuel injector receptacles **280**. The fuel injector receptacles receive the fuel injectors **124**, **126**, **128**, **130** and position them for injection into passages that will be discussed below. The fuel injectors **124**, **126**, **128**, **130** are coupled to the fuel rails **132**, **134** in any suitable manner. Thus, the fuel injectors **124**, **126**, **128**, **130** extend between the fuel rails **132**, **134** and the plate **120**. The illustrated fuel rails **132**, **134** each define a fuel supply passage **276** that extends from one side of the fuel rail **132**, **134** to the other side. Thus, the fuel rail can have fuel lines coupled to one side of the fuel rail with the other side being plugged. In this manner, the fuel rails **132**, **134** provide flexibility in configuring the fuel supply system.

An inner opening **282** of the plate **120** receives the adaptor **122**. The plate **120** and the adaptor **122** comprise an interlocking mechanical structure. In the illustrated configuration, the plate **120** comprises two shallow grooves **284** while the adaptor **122** comprises two tabs **286**. The tabs **286** are received within the grooves **284** such that the adaptor is correctly oriented and supported within the opening **282**. Other configurations also can be used. As illustrated, the adaptor **122** can rest within the opening and be supported therein.

The adaptor **122** preferably comprises openings **290** that generally align with the passages **146**, **148**, **150**, **152**. The adaptor **122** also preferably is shaped and configured to reduce interference with fuel injected by the fuel injectors **124**, **126**, **128**, **130**. For instance, cutouts **292** can be provided in side walls **294** of the adaptor **122**. Other configurations also can be used.

The illustrated fuel injection body **100** can be used with or without the injector plate **120**. The injector plate **120** provides a second set of injectors for use in certain applications, as desired. In some applications, a blank end cap can be used on one or both ends of the throttle body and fuel injectors on that side of the throttle body or on those sides of the throttle body can be omitted such that the fuel injection body functions solely as a throttle body. Thus, many variations can be made of the basic construction.

With reference now to FIGS. **14** and **15**, a small housing **300** can be mounted to a side of the fuel injection body **100**. As will be described, the housing **300** is sized and configured to house a circuit board **310** that can be used to control operations of the fuel injection body **100**.

The housing **300** preferably is received with a recessed region defined along a side of the throttle body **102**. In some configurations, the housing **300** is mounted vertically between a top portion **302** of the throttle body **102** (e.g., the rim that defines, at least in part, the outer peripheral surface adjacent to the top surface **140** of the throttle body **102**) and the lower flange **142** of the throttle body. Stated another way, the housing **300** can be mounted along the main portion **144** of the main throttle body **102**. By mounting the housing **300** directly to the fuel injection body **100**, the fuel injection body **100** can be virtually self-contained with less wires running throughout the engine compartment. Moreover, by mounting the housing **300** within the recess defined in the main portion **144** of the main throttle body **102**, the fuel injection body **100** can be compactly arranged while maintaining a virtually self-contained construction.

In the illustrated configuration, the housing **300** includes a wall **304** that defines a recess **306**. The recess **306** preferably is sized and configured to accommodate a throttle position sensor (not shown), which can be mounted to the throttle position sensor mount **186**. In the illustrated configuration, the wall **304** extends along a portion of the throttle position sensor mount **186**. Such a configuration provides a more compact configuration. Moreover, by positioning the housing **300**, and more particularly, the circuitry **310** contained within the housing **300**, generally adjacent to the position sensor and the position sensor mount **186**, the position sensor can be connected to the circuitry **310** with a relatively short length of wire.

With reference to FIG. **14**, the housing **300** preferable is formed in two pieces: an outer lid **312** and an inner base **314**. In some configurations, the outer lid **312** is sealed to the inner base **314** during manufacturing. In some configurations, the outer lid **312** is removably attached to the inner base **314**. In some configurations, the outer lid **312** slides over a portion of the inner base **314**. In some configurations, a seal (not shown) can be positioned between the inner base **314** and the outer lid **312** such that a water tight compartment can be defined by the housing **300**.

In the illustrated configuration, the inner base **314** and the outer lid **312** are secured together to the fuel injection body **100**. As illustrated, the housing **300** can comprise one or more mounting ears **316**. The mounting ears receive threaded fasteners **318** in the illustrated configuration. Other suitable manners of securing the housing **300** to the fuel injection body **100** also can be used. In some configurations, a shock absorbing component can be used as part of the mounting structure such that the housing **300** can be better isolated from engine vibrations. The fasteners **318** secure the housing **300** to the throttle body **102**. In some configurations, the housing **300** can be secured to other portions of the fuel injection body **100**.

The circuitry **310** can be mounted inside of the housing **300** in any suitable manner. The circuitry **310** can comprise a main board **320** and a daughter board **322**. In some configurations, the main board **320** can be electrically connected to the fuel injectors **110**, **112**, **114**, **116** such that the main board **320**, and particularly an ECU that is defined by the main board **320**, can control the injection timing and amount. The daughter board **322** can be electrically connected to an oxygen sensor (not shown). The oxygen sensor can be a wideband oxygen sensor that can be mounted along a suitable portion of an exhaust system. In the illustrated configuration, a wire harness **324** extends from the daughter board **322** to the oxygen sensor. The circuitry **310** also can be connected to a serial cable (not shown) such that the circuitry **310** can be connected to an external computer for interaction with the external computer. Other configurations also are possible. As illustrated, a vacuum connection **326** also can be provided. The vacuum connection **326** can extend through the housing **300** and can be connected to a sensor that is mounted to the circuitry **310**. Other configurations also are possible.

Although the present invention has been described in terms of a certain embodiment, other embodiments apparent to those of ordinary skill in the art also are within the scope of this invention. Thus, various changes and modifications may be made without departing from the spirit and scope of the invention. For instance, various components may be repositioned as desired. Moreover, not all of the features, aspects and advantages are necessarily required to practice the present invention. Accordingly, the scope of the present invention is intended to be defined only by the claims that follow.

What is claimed is:

1. A fuel injection unit comprising a main throttle body, said main throttle body comprising a first side surface, a second side surface, a top surface generally extending between said first side surface and said second side surface, a bottom surface generally extending between said first side surface and said second side surface, a first end cap secured to said first side surface, a second end cap secured to said second side surface, a first air passage extending between said top surface and said bottom surface and a second air passage also extending between said top surface and said bottom surface, a first fuel injector extending through said first side surface toward said first air passage, said first fuel injector being generally covered by said first end cap, a second fuel injector extending through said second side surface toward said second air passage, and said second fuel injector being generally covered by said second end cap.

2. The fuel injection unit of claim **1**, wherein said first end cap is removable from said main throttle body.

3. The fuel injection unit of claim **1** further comprising a fuel introduction port formed in an exterior surface of said first end cap, said fuel introduction port being in fluid communication with said first fuel injector.

4. The fuel injection unit of claim **3** further comprising a fuel supply passage extending between said fuel introduction port and said first fuel injector, said fuel supply passage being formed in a wall of said first end cap.

5. The fuel injection unit of claim **4**, wherein said fuel supply passage formed in said wall of said first end cap defines a first fuel supply passage, a second fuel supply passage being formed in a wall of said second end cap, said second fuel supply passage being in fluid communication with said second fuel injector, said first and second fuel supply passages being connected together by a connection passage, said connection passage extending through said main throttle body.

6. The fuel injection unit of claim **1**, wherein said fuel introduction port defines a first fuel port, said first end cap further comprising a second fuel port, said first and second fuel ports being connected together and being connected to said first fuel injector.

7. The fuel injection unit of claim **6**, wherein a fuel passage extends between the first and second fuel ports and the first fuel injector is fluidly connected to the fuel supply passage.

8. The fuel injection unit of claim **4** further comprising a fuel pressure sensor mount in fluid communication with said fuel supply passage, said fuel pressure sensor mount being adapted to receive a fuel pressure sensor such that said fuel pressure sensor can be positioned within said first end cap.

9. The fuel injection unit of claim **1** further comprising an idle air passage defined within said main throttle body, said idle air passage emerging through at least one of said first side surface and said second side surface at a location underlying the respective one of the first and second end caps.

10. The fuel injection unit of claim **1** further comprising an auxiliary injector plate secured to said bottom surface of said main throttle body.

11. The fuel injection unit of claim **10**, wherein said auxiliary injector plate comprises fuel rails that generally overlie at least one fuel injector.

12. An auxiliary fuel injector plate comprising a top surface, a bottom surface spaced from and generally parallel to said top surface, a central passageway extending from said top surface to said bottom surface, an adaptor positioned within said central passageway, said adaptor comprising a plurality of openings, a first fuel injector extending into said central passageway, a first fuel rail mounted to said auxiliary fuel injector plate and extending laterally outward from said auxiliary fuel injector plate, said first fuel rail defining a fuel passage that is in fluid communication with said first fuel injector.

13. The auxiliary fuel injector plate of claim **12**, wherein the first fuel injector is positioned below the adaptor.

14. The auxiliary fuel injector plate of claim **12**, wherein said first fuel rail overlies at least a portion of said first fuel injector.

15. The auxiliary fuel injector plate of claim **12**, wherein said top surface comprises a mounting recess and a portion of said first fuel rail is positioned within said mounting recess.

16. The auxiliary fuel injector plate of claim **12** in combination with a main throttle body, said auxiliary fuel injector plate being secured to a lower surface of said main throttle body.

* * * * *