US009303578B2

(12) **United States Patent**
Wittkopf et al.

(10) **Patent No.: US 9,303,578 B2**
(45) **Date of Patent: Apr. 5, 2016**

(54) **THROTTLE BODY FUEL INJECTION SYSTEM WITH IMPROVED IDLE AIR CONTROL**

(75) Inventors: **Michael Anthony Wittkopf**, El Paso, TX (US); **Todd Alan Petersen**, Scottsdale, AZ (US)

(73) Assignee: **MSD LLC**, El Paso, TX (US)

(*) Notice: Subject to any disclaimer, the term of this patent is extended or adjusted under 35 U.S.C. 154(b) by 688 days.

(21) Appl. No.: **13/469,938**

(22) Filed: **May 11, 2012**

(65) **Prior Publication Data**

US 2013/0298868 A1 Nov. 14, 2013

(51) **Int. Cl.**

F02D 9/08	(2006.01)
F02D 41/08	(2006.01)
F02D 41/40	(2006.01)
F02D 11/10	(2006.01)
F02D 31/00	(2006.01)
F02M 23/04	(2006.01)
F02M 69/04	(2006.01)
F02M 69/32	(2006.01)
F02D 41/14	(2006.01)

(52) **U.S. Cl.**

CPC ***F02D 41/08*** (2013.01); ***F02D 11/10*** (2013.01); ***F02D 31/008*** (2013.01); ***F02D 41/40*** (2013.01); ***F02M 23/04*** (2013.01); *F02D 2041/141* (2013.01); *F02M 69/043* (2013.01); *F02M 69/32* (2013.01); *Y02T 10/44* (2013.01)

(58) **Field of Classification Search**

CPC F02D 31/005; F02D 41/083; F02D 31/003
USPC 123/336, 337, 427, 323, 361, 328, 399, 123/470–472, 339.1, 339.12, 339.14, 123/339.23; 60/324, 292, 287, 295
See application file for complete search history.

(56) **References Cited**

U.S. PATENT DOCUMENTS

4,348,338	A	9/1982	Martinez et al.	
5,200,900	A	4/1993	Adrain et al.	
5,523,948	A	6/1996	Adrain	
5,809,972	A	9/1998	Grant	
6,467,465	B1 *	10/2002	Lorts	123/527
7,156,073	B2 *	1/2007	Kure	123/337
7,191,755	B2 *	3/2007	Vint	123/339.26
7,735,475	B2	6/2010	Farrell et al.	

(Continued)

OTHER PUBLICATIONS

Professional Products: Powerjection™ III, Instructions & User Manual for 70020, 70021, 70026, & 70027 Kits and 70028, 70029 plus 70120 through 70129 Kits; Copyright 2010 www.professional-products.com.

Primary Examiner — Thomas Moulis
Assistant Examiner — Joseph Dallo
(74) *Attorney, Agent, or Firm* — Standley Law Group LLP

(57) **ABSTRACT**

A single point fuel injection throttle body assembly including an idle air control circuit having an port opening into main intake bores downstream of the point of fuel distribution into the air stream. When the idle air control circuit is open, an air/fuel mixture, rather than simply air, is drawn into the into the intake manifold, thereby reducing the tendency for a lean fuel mixture at idle. A unique engine control unit "feed forward" algorithm controls the fuel injection as a function of the position of the idle air control motor so that as the idle air control circuit is opened, the pulse widths of the fuel injector signals are increased. This feature allows the initial open-loop-based fuel mixture supplied by system to be more accurate and eliminates rough unstable idle associated with closed-loop control lag times.

15 Claims, 7 Drawing Sheets

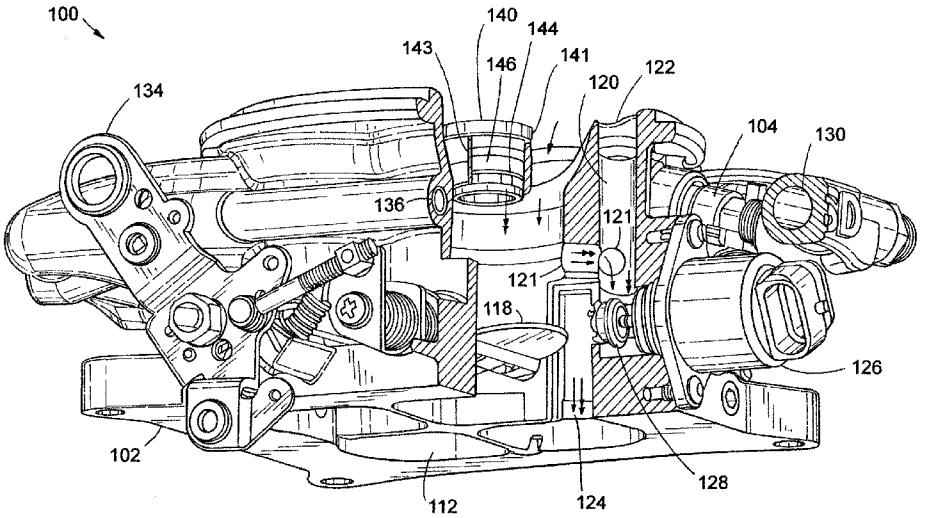

(56) **References Cited**

U.S. PATENT DOCUMENTS

2004/0187920 A1* 9/2004 Schmidt et al. 137/15.25
2007/0040143 A1* 2/2007 Garrick 251/305
2009/0024301 A1* 1/2009 Volpato 701/103
2010/0018024 A1* 1/2010 Garrick 29/402.19

* cited by examiner

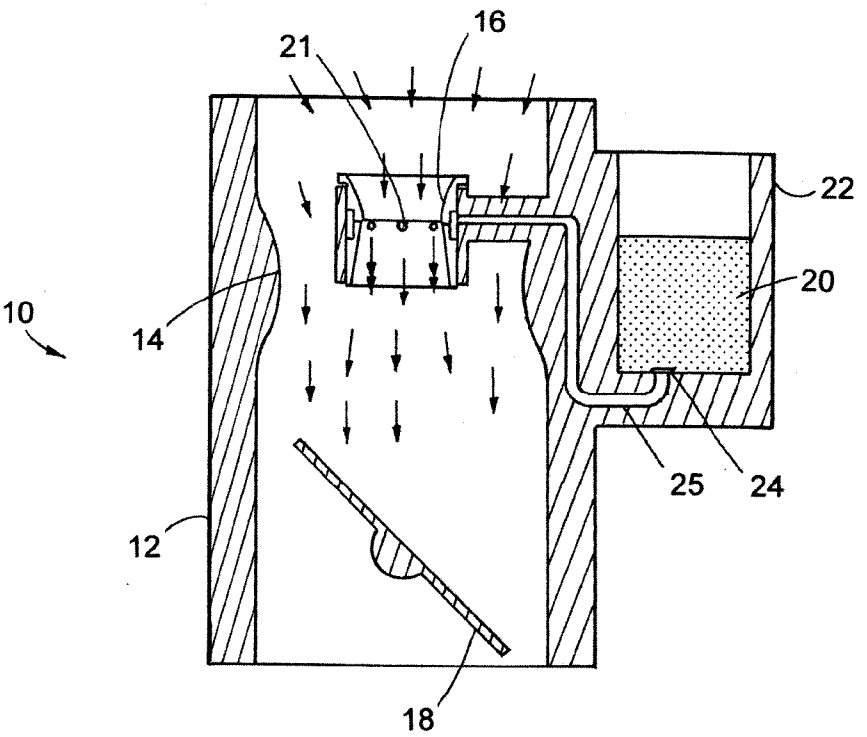

FIG.1
(PRIOR ART)

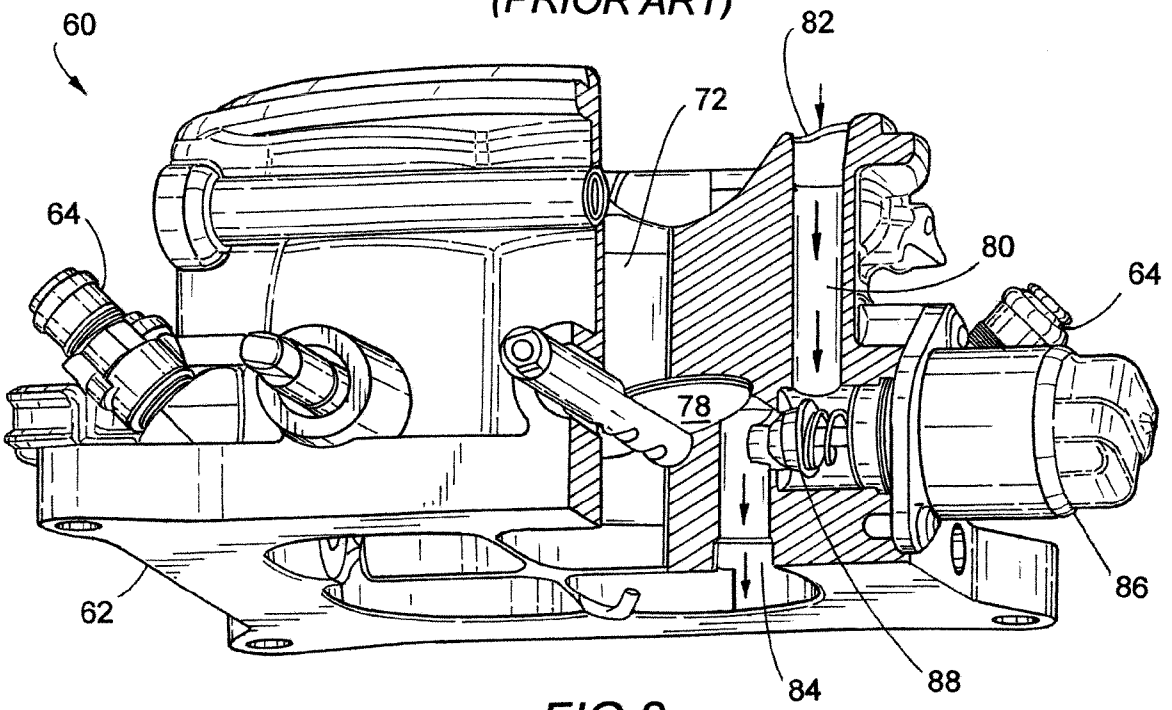

FIG.2
(PRIOR ART)

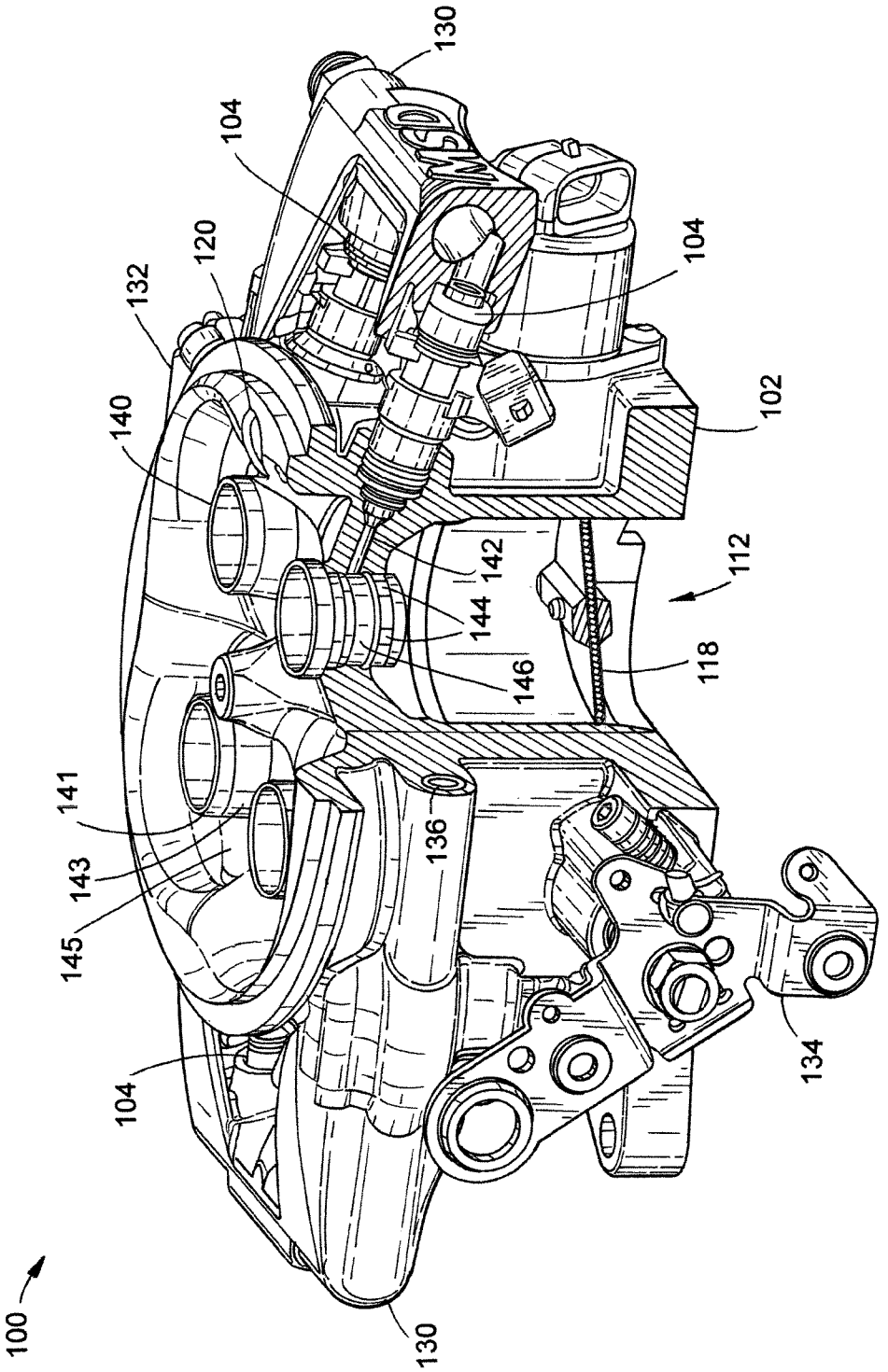
130
104
104
120
132
140
102
142
112
144
118
146
141
136
143
145
134
104
100
130

FIG.3

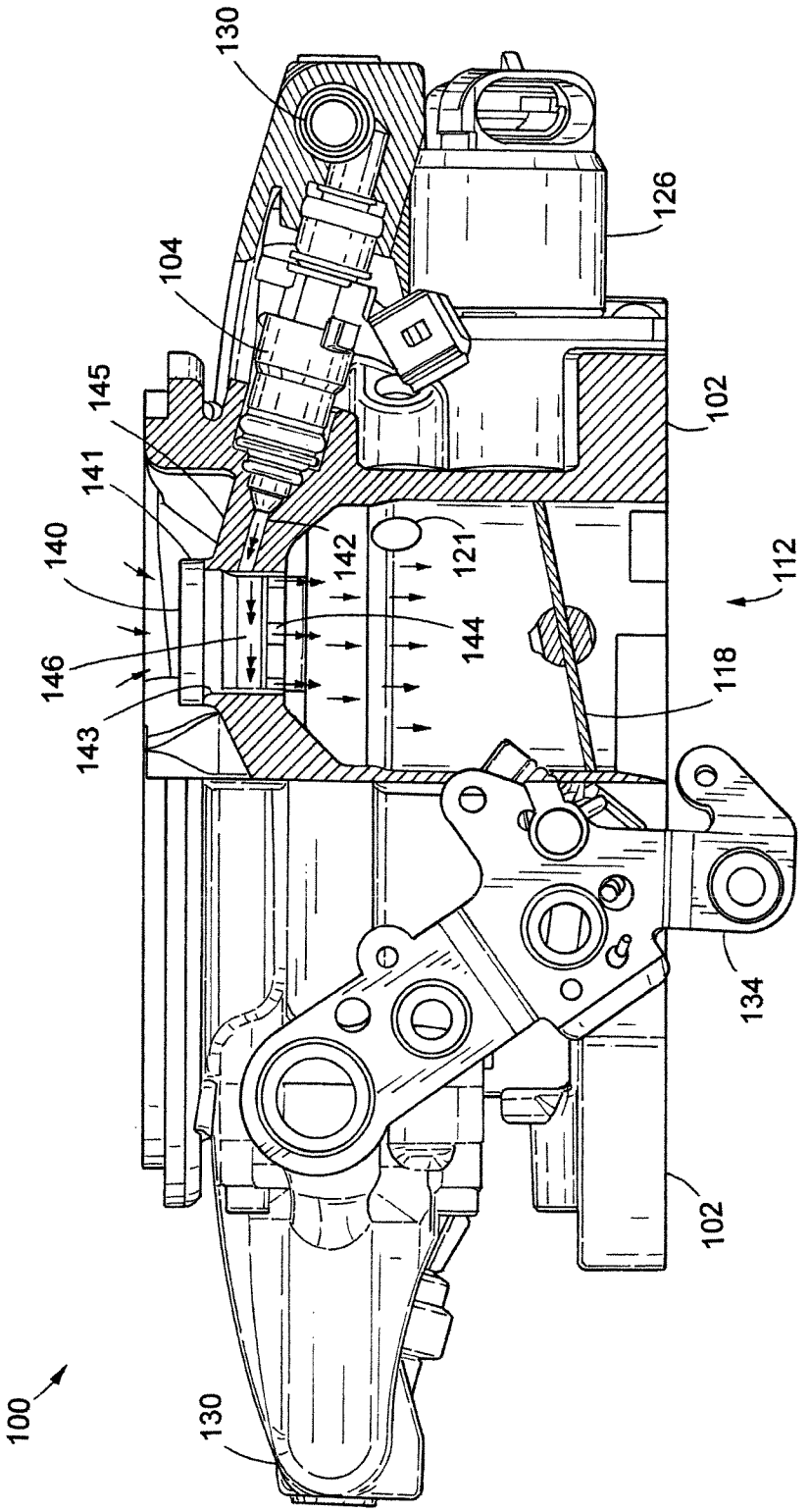
100
130
104
145
141
140
146
143
142
144
121
130
126
102
112
118
134
102

FIG.4

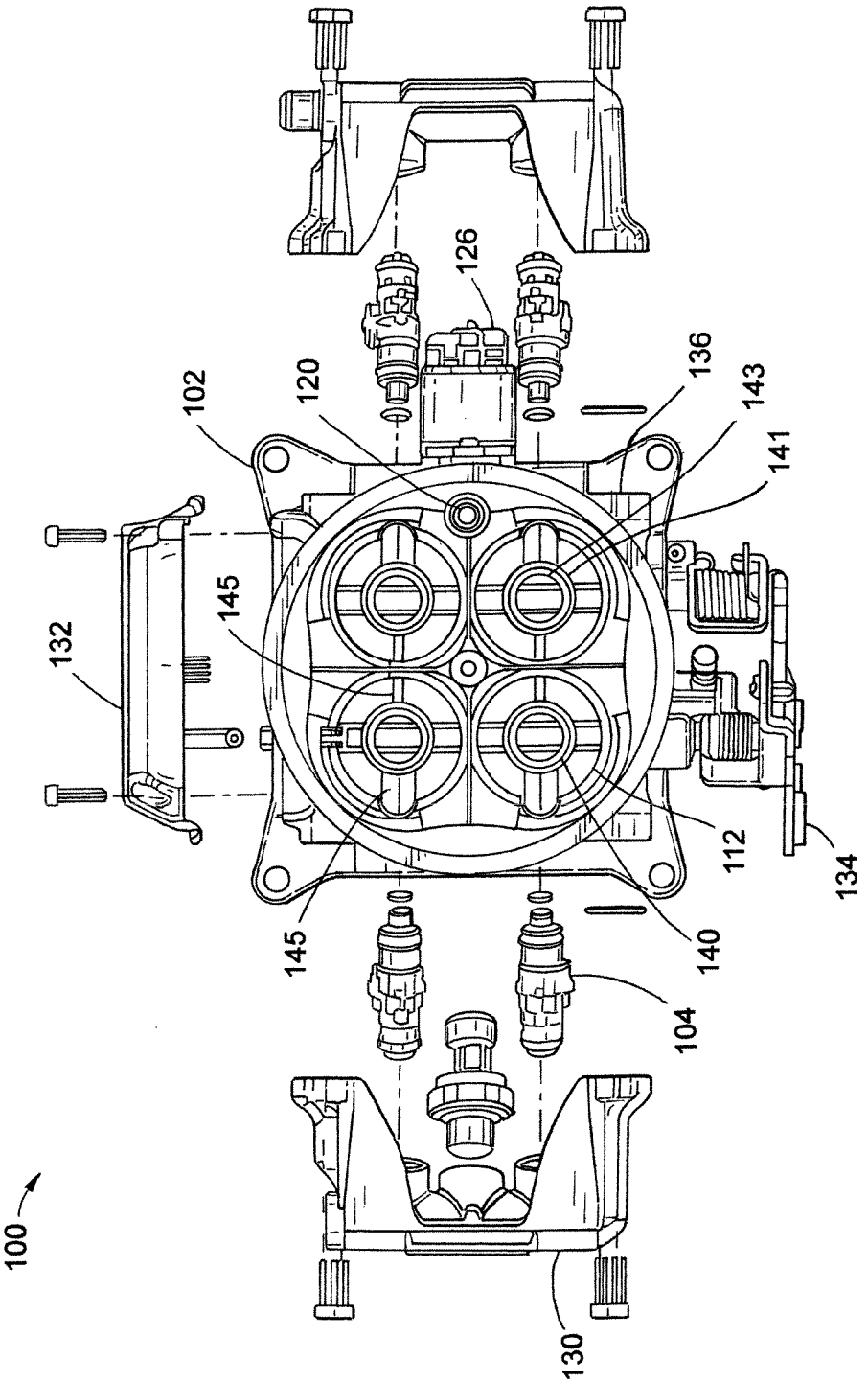

FIG.5

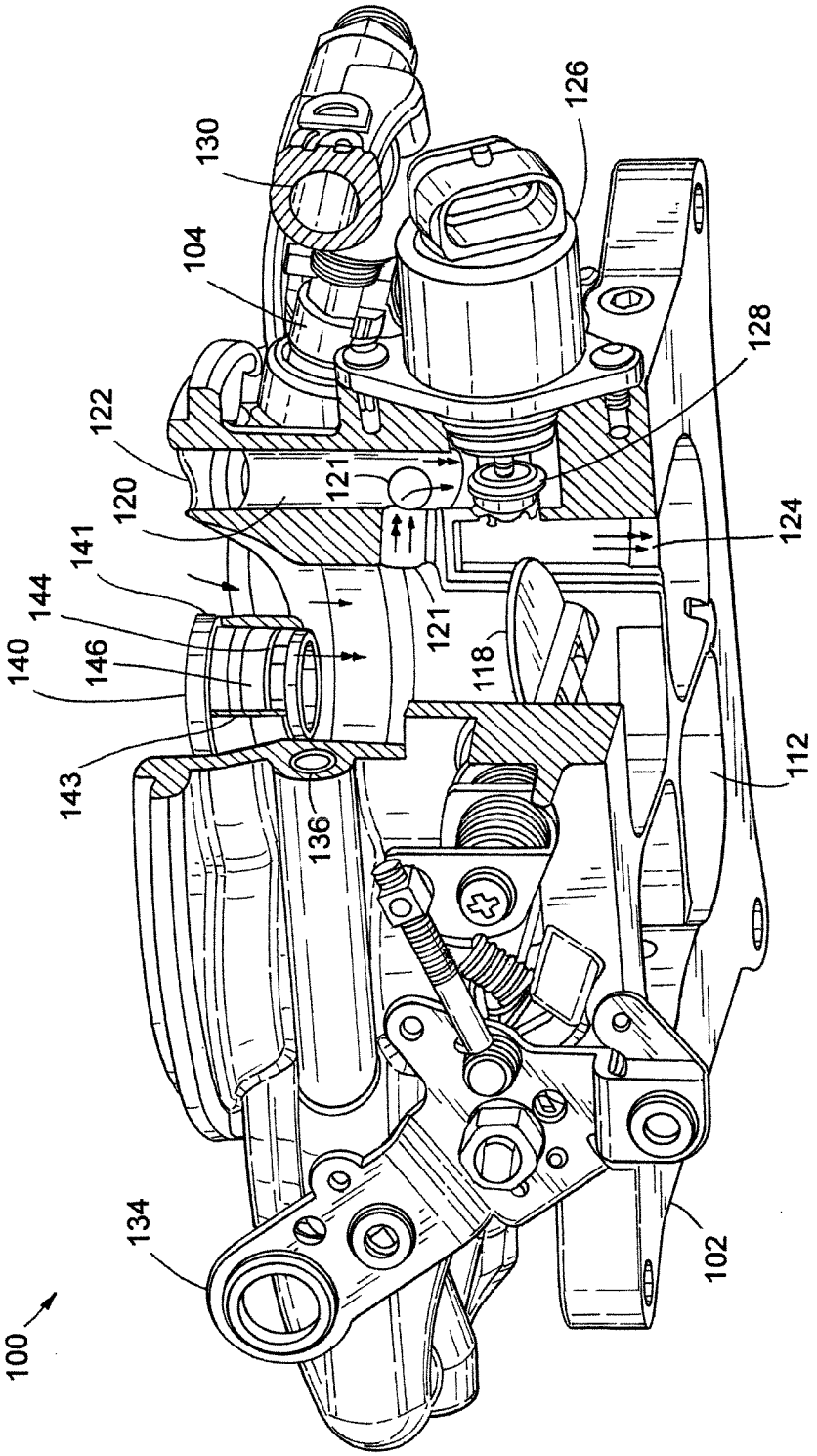
100
102
104
112
118
120
121
121
122
124
126
128
130
134
136
140
141
143
144
146

FIG.6

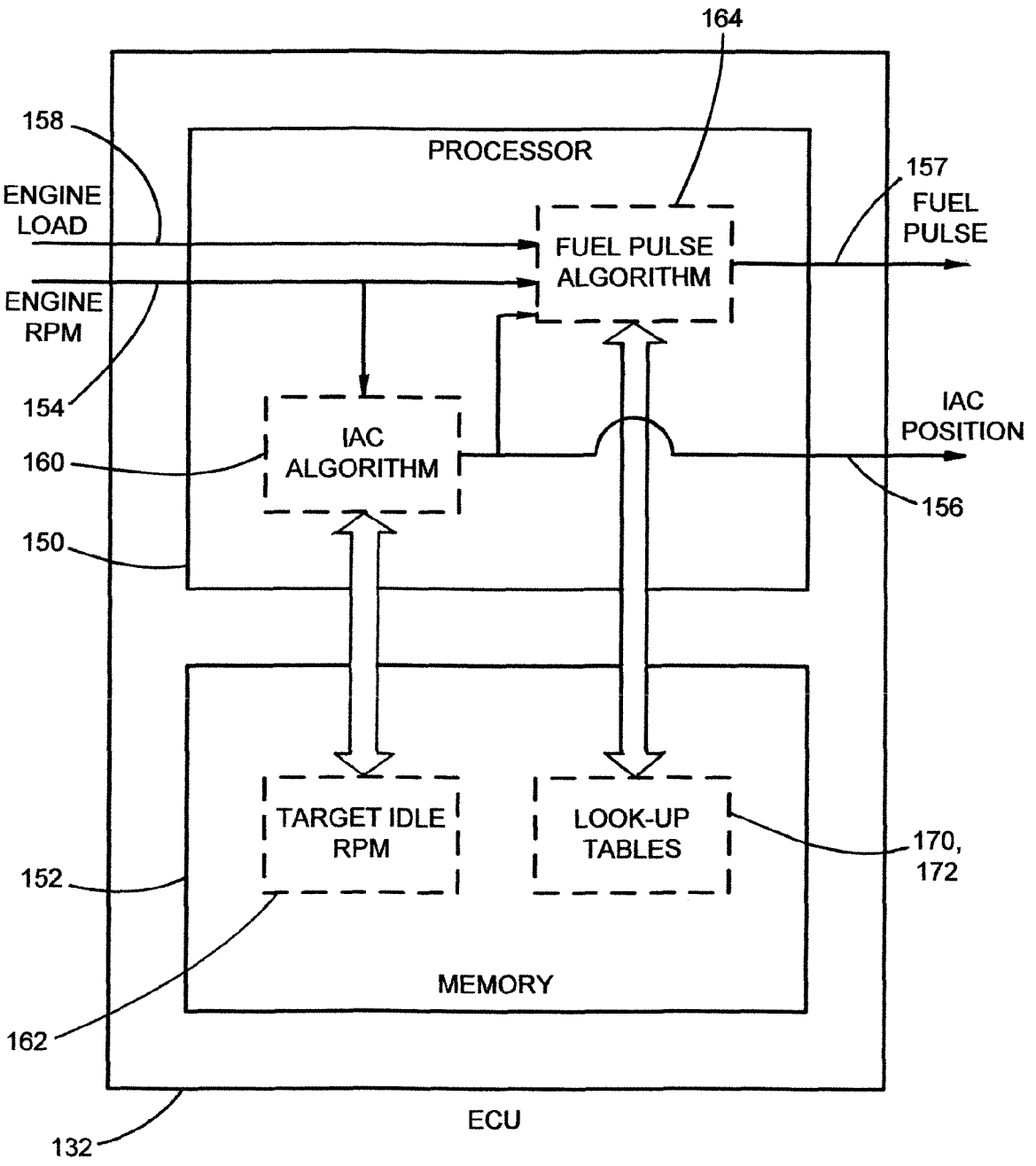
164
158
PROCESSOR
157
ENGINE LOAD
FUEL PULSE
FUEL PULSE ALGORITHM
ENGINE RPM
154
IAC POSITION
IAC ALGORITHM
160
156
150
TARGET IDLE RPM
LOOK-UP TABLES
170, 172
152
MEMORY
162
ECU
132

FIG.7

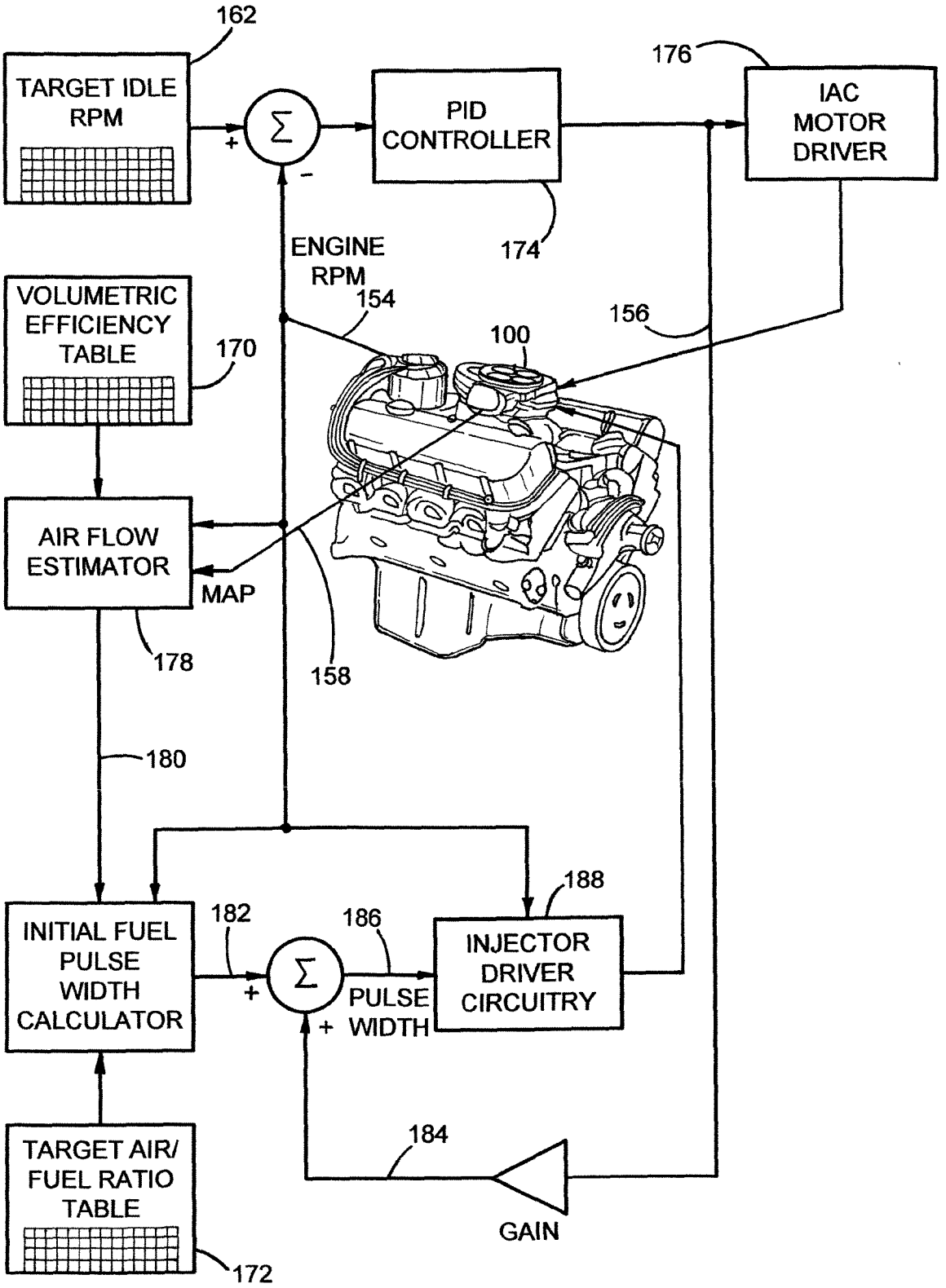
162
TARGET IDLE RPM
+
Σ
-
PID CONTROLLER
174
176
IAC MOTOR DRIVER
ENGINE RPM
154
156
100
VOLUMETRIC EFFICIENCY TABLE
170
AIR FLOW ESTIMATOR
MAP
178
158
180
188
182
186
INITIAL FUEL PULSE WIDTH CALCULATOR
+
Σ
PULSE WIDTH
+
INJECTOR DRIVER CIRCUITRY
184
TARGET AIR/ FUEL RATIO TABLE
GAIN
172

FIG.8

THROTTLE BODY FUEL INJECTION SYSTEM WITH IMPROVED IDLE AIR CONTROL

BACKGROUND OF THE INVENTION

1. Field of the Invention

This invention relates generally to fuel injection systems for internal combustion engines, and in particular to single point throttle body fuel injection systems designed for retrofitting vintage carburetion fuel delivery systems.

2. Background Art

A carburetion fuel delivery system uses a carburetor to supply and meter the mixture of fuel and air in relation to the speed and load of the engine. FIG. **1** illustrates a typical carburetor (**10**). Carburetor (**10**) includes one or more barrels (**12**). A butterfly-type throttle valve (**18**) is located near the bottom of the barrel (**12**), the opening and closing of which is controlled through a throttle linkage (not illustrated). Each barrel (**12**) includes a primary venturi (**14**) and an annular boost venturi (**16**), although additional venturis may be used to permit more precise metering of fuel and air under different conditions. Liquid fuel (**20**) is contained in a float bowl (**22**) and is in fluid communication with one or more orifices (**21**) located at the throat within the annular venturi (**16**). A jet (**24**) having a selectively sized port formed therethrough is disposed within the float bowl (**22**) at the entrance to the fluid passage (**25**) between the float bowl and the venturi (**16**). As air flows through the barrel (**12**) during operation of the engine (depicted using single-headed arrows), a low pressure develops at the throats of the venturis (**14**, **16**) according to Bernoulli's law. The difference in pressure at the fuel across fluid passage (**25**) causes fuel to flow into the air stream (depicted using double-headed arrows). Orifices (**21**) atomize the liquid fuel, and because of the low pressure created by venturis (**14**, **16**), the fuel is nearly instantaneously vaporized. The size of jet (**24**) determines the air/fuel ratio.

Variations in atmospheric temperature and pressure, engine temperature, load and speed make perfect carburetion nearly impossible to obtain under all driving conditions. A cold engine, an engine at idle, and an engine at wide-open throttle all require a rich fuel-air mixture, while a warm engine at cruise requires a lean fuel-air mixture. The airflow also varies greatly; the airflow through the carburetor at wide-open throttle may be 100 times greater than the airflow at idle. Complicating matters is the fact that gasoline has components with widely varying boiling points, which may result in less than fully vaporized fuel entering the engine cylinders under certain conditions, particularly when the intake manifold is cold.

In contrast, fuel injection systems meter fuel much more precisely than carburetors, thereby allowing optimal fuel-air mixture to be more consistently delivered across the full spectrum of driving conditions. Fuel injection provides increased horsepower, higher torque, improved fuel economy, quicker cold starting, and other benefits. As a result, fuel injection systems have largely replaced carburetion fuel delivery systems in automobiles manufactured after 1985.

Fuel injection systems use one or more fuel injectors, which are electromechanical devices that meter and atomize fuel. In each injector, application of an electrical current to a coil lifts a spring-loaded needle within a pintle valve off its seat, thereby allowing fuel under pressure to be sprayed through an injector nozzle to form a cone pattern of atomized fuel.

Fuel injection systems may be classified as single point, multi-point, or direct injection. As illustrated in FIG. **2**, single point injection, also known as throttle body injection, uses one or more fuel injectors (**64**) located generally in a single location the throttle body (**62**). Fuel is sprayed into throttle body (**62**) for delivery to the cylinders via the intake manifold (not illustrated). Fuel injectors (**64**) may be of the continuous injection variety, for which fuel is sprayed continuously and fuel delivery is controlled by adjusting fuel pressure, or of the intermittent injection variety, for which the injectors are rapidly cycled on and off and fuel delivery is controlled by the duration of the "on" pulse within a cycle. The latter variety is preferable for electronic control.

Although mechanical and hydraulic control systems are also known in the art, electronic control is the most common manner for governing the rate of fuel injection. A microprocessor- or microcontroller-based computer system is included within an engine control unit (ECU). The computer controls various engine and automotive systems as preprogrammed functions of numerous signals received from various sensors.

For control of fuel injection, the computer generates periodic pulse signals for each of the injectors, with "on" pulses for firing the fuel injectors. One or more driver circuits, located within the ECU, amplify and condition the pulse signals to be suitable for use with the fuel injectors. The cycle wavelength is a function of engine speed, and the pulse widths of the "on" pulses are a function of engine load. Engine speed is typically determined by a distributor output, a tachometer output, or a crankshaft sensor. Engine load is typically determined with either a mass airflow sensor or a manifold absolute pressure (MAP) sensor.

Based on the engine speed and load input signals, the computer generates the fuel injector pulse signals. The fuel injector pulse signals are initially based on target air-fuel ratio values, which are compensated for the volumetric efficiency of the engine at its operating speed and load. Target air-fuel ratios and volumetric efficiency coefficients may be stored in one or more look-up tables in volatile or non-volatile computer memory and are accessed using engine load and speed as input indices. The use of look-up tables allows for rapid response by the ECU to various vehicle operating conditions without the need for extensive time-consuming calculations. Controlling the fuel injection directly from the look-up tables is referred to as open-loop control.

However, when the ECU operates in a closed-loop control mode, the actual fuel injector pulse signals may vary from those derived directly from the look-up tables based on actual engine operating conditions. In closed-loop control, the amount of oxygen present in the exhaust gas is measured, which provides an indication of whether the engine is running too rich, too lean, or stoichiometrically. The fuel rate supplied to the engine is corrected by the ECU based on the input from an oxygen sensor so that the actual air-fuel ratio supplied to the engine equals the stored target air-fuel ratio under all conditions. In some ECU systems, one or more look-up tables may be updated based on the corrections derived during closed-loop control for better open-loop and closed-loop control. Closed-loop control is not used under some conditions, such as when the exhaust gas temperature is too cold for the oxygen sensor to provide reliable data.

There are a number of enthusiasts who operate vintage automobiles, often muscle cars, hotrods, and the like, who would benefit from upgrading the original carburetion fuel delivery systems with fuel injection systems. There is a desire, however, to maintain the traditional clean look, feel, and simplicity of a carburetor mounted atop the intake manifold. Throttle body fuel injection systems are ideal for such applications. Accordingly, a niche market has evolved for kits

to adapt existing carburetors with injection capability or to replace existing carburetors with bolt-in-place throttle body fuel injection systems. Although such retrofit products exist, which provide many benefits of fuel injection, there is room for improvement in the way that fuel and air are delivered and mixed within the throttle body assembly.

For example, FIG. **2** is a perspective view of a throttle body fuel injection system (**60**) of prior art for replacing a carburetor, such as that disclosed by U.S. Pat. No. 7,735,475 issued to Farrell et al. on Jun. 15, 2010. A section of the throttle body (**62**) is broken out to reveal the structure of one of the air intake barrels or bores (**72**), a throttle valve (**78**), and the idle air control (IAC) circuit (**80**). The fuel injectors (**64**) are positioned so as to inject the fuel just above the throttle valve blades (**78**). The idle air circuit intake (**82**) is located at the top of the throttle body (**62**), and the outlet (**84**) is located at the bottom of the throttle body (**62**). An idle air controller motor (**86**) is connected to an IAC valve assembly (**88**) so as to allow air flow through the IAC circuit (**80**).

The Farrell et al. device positions the fuel injectors (**64**) just above the throttle blades (**78**) "to direct fuel to cover the upper surface of the throttle blade to improve fuel atomization." U.S. Pat. No. 7,735,475, col. 3 ll. 58-59. Other designs, such as those disclosed by U.S. Pat. No. 5,809,972 issued to Grant on Sep. 22, 1998 or U.S. Pat. No. 4,348,338 issued to Martinez et al. on Sep. 7, 1982, utilize venturis akin to carburetor annular boost venturis (**16**) of FIG. **1** to create low pressure zones to improve atomization and vaporization of injected fuel. However, these designs may not provide optimal atomization and mixture delivery to each engine cylinder. Indeed, the use of venturis with concomitant low pressure zones in fuel injection systems has disadvantages, including imprecise fuel delivery due to the propensity to draw fuel out of the fuel passages downstream of the injectors during "off" periods in the fuel injection cycle and a greater risk for the accumulation of icing within the throttle body under certain conditions.

As another example, the Farrell et al. IAC circuit (**80**) is completely separate from the intake barrels (**72**). As a result, idle air flowing through the IAC circuit (**80**) is not mixed with fuel. For this reason, the mixture tends to be too lean during idle conditions, causing rough unstable idle. Analogously, in ECU systems of prior art, fuel injection and IAC algorithms are also independent of one another. IAC motor position is controlled primarily as a function of engine speed, and sometimes, coolant temperature. Additional inputs, such as manifold absolute pressure or throttle position, may also be considered to ensure that the engine is actually in an idle condition prior to actuating the IAC motor. Fuel injector pulsing is controlled primarily as a function of engine speed, engine load, exhaust oxygen levels, and sometimes manifold air temperature (for air density compensation), coolant temperature (i.e., for simulating carburetor choke function) or throttle position (i.e., for simulating carburetor accelerator pump circuit operation). Fuel injector pulsing is not a function of IAC motor position. As the IAC opens when the engine begins to idle, the fuel delivered to the engine, initially based on the open-loop look-up tables, becomes too lean. The ECU compensates for the lean idle condition during closed-loop control by measuring post-combustion oxygen levels, but any corrective feedback necessarily lags engine operation under undesirably lean conditions.

3. Identification of Objects of the Invention

A primary object of the invention is to provide a fuel injection system for internal combustion engines that provides superior performance with optimal fuel distribution and idle control circuitry.

Another object of the invention is to provide an electronic fuel injection control system that provides superior performance during idle conditions.

Another object of the invention is to provide a fuel injection system for retrofitting carbureted engines that installs easily with minimal external connections.

SUMMARY OF THE INVENTION

The objects described above and other advantages and features of the invention are incorporated in a throttle body fuel injection system and method that is designed and arranged to easily replace four-barrel carburetors. The system preferably includes a throttle body assembly with four main bores, each with a throttle plate and an associated fuel injector, left and right fuel rails, and an engine control unit that is integrated into the side of throttle body. Each injector feeds fuel into a circular fuel distribution ring via a fuel injection conduit, which introduces pressurized fuel into the air stream. Both the main bores and the fuel distribution rings have profiles that avoid constrictions to prevent low pressure zones according to the Venturi effect. That is, the throttle body according preferred embodiments of the invention avoids using a venturi or the venturi effect to accomplish fuel distribution. Fuel is injected through downward-facing outlets at or near the bottom end of the ring.

In a preferred embodiment, the fuel distribution ring is a two-piece ring formed of a ring-shaped insert pressed into a ring-shaped outer housing. The outer housing is ideally integrally formed with the throttle body casting and includes one or more radial spokes to connect to the walls of the bore. At least one spoke for each ring includes a fuel injection conduit that supplies the ring with fuel from an injector. The insert includes axial grooves intervaled about its exterior circumference of insert that are joined by a circumferential groove formed about the insert. The grooves are in fluid communication with the fuel injection conduit.

The throttle body assembly includes an idle air control circuit that bypasses throttle blades. The idle air control circuit has an inlet port at the top of the throttle body and an outlet port at the bottom of throttle body. A cross-over port joins the idle air control circuit to one or more bores within the throttle body below the fuel distribution ring. An idle air control motor is used to throttle the amount of air that flows through the idle air control bypass circuit by varying the stem of an idle air control valve between open and shut positions. When the idle air control valve is open, an air/fuel mixture is drawn into the into the intake manifold through the idle air control circuit from the region of the throttle body bores downstream of the fuel injection rings. Because an air fuel mixture rather than air is supplied at idle, the tendency for a lean idle fuel mixture is minimized.

Additionally, a unique engine control unit "feed forward" algorithm controls the fuel injection as a function of the position of the idle air control motor so that as the IAC valve is opened, the pulse widths of the fuel injector signals are increased. This feature allows the initial open-loop-based fuel mixture supplied by system to be more accurate and eliminates rough unstable idle associated with closed-loop control lag times.

BRIEF DESCRIPTION OF THE DRAWINGS

The invention is described in detail hereinafter on the basis of the embodiments represented in the accompanying figures, in which:

FIG. **1** is an axial cross-section of the barrel of a typical carburetor of prior art, showing primary and annular booster venturis for drawing fuel from a float bowl into the air stream;

FIG. **2** is a perspective view of a throttle body fuel injection system of prior art with a broken-out section to reveal the detail of the idle air control circuit;

FIG. **3** is a perspective view of a throttle body fuel injection system with a broken-out section to reveal the detail of an annular fuel distribution ring according to a preferred embodiment of the invention;

FIG. **4** is a side elevation of the throttle body fuel injection system of FIG. **3**;

FIG. **5** is a top plan view exploded diagram of the throttle body fuel injection system of FIG. **3**;

FIG. **6** is a perspective view of the throttle body fuel injection system of FIG. **3** shown with a larger broken-out section to reveal the detail of an idle air control arrangement according to a preferred embodiment of the invention;

FIG. **7** is a block level schematic diagram of the engine control unit of the fuel injection system according to a preferred embodiment of the invention; and

FIG. **8** is a flowchart diagram of the control system algorithm implemented by the engine control unit of FIG. **7** according to a preferred embodiment of the invention.

DESCRIPTION OF THE PREFERRED EMBODIMENT OF THE INVENTION

FIGS. **3-5** illustrate a throttle body fuel injection system **100** according to a preferred embodiment of the invention. Throttle body fuel injection system **100** is a preferably an electronic fuel injection system that is designed and arranged to easily replace four-barrel carburetors. Throttle body **100** is designed to bolt on to any square-bore, four-barrel intake, including the common **4150** and **4160** designs. These intake manifold configurations are found on numerous engines for muscle cars and hot rods, including small and big block engines manufactured by Ford, General Motors, and Mopar. There are also aftermarket intake manifolds available to convert LS engines.

System **100** includes a throttle body **102** with four main bores **112** (each with a throttle plate **118**), left and right fuel rails **130**, and an engine control unit (ECU) **132** that is integrated into the side of throttle body **102** opposite the throttle linkage (**134**). The fuel is fed into one of the fuel rails **130**, which is connected to the opposite fuel rail via a passage **136** formed within the throttle body. The fuel rails **130** provide fuel to four fuel injectors **104**, which are preferably located above the throttle plates **118**. Ideally, there is one fuel injector **104** per bore **112**.

Each injector **104** feeds fuel into a circular fuel distribution ring **140** via a fuel injection conduit **142**. Fuel distribution ring **140** introduces pressurized fuel into the air stream. Note that unlike the carburetor annular booster venturis **16** of FIG. **1**, fuel distribution rings **140** have profiles that do not form constrictions for creating low pressure zones according to the Venturi effect. Indeed, the inner and outer diameters of fuel distribution rings **140** have substantially straight sides for minimal pressure drop. Also unlike the carburetor annular booster venturis **16** of FIG. **1**, in which the fuel is introduced into the air stream through orifices **21** located in the interior side wall of the ring, fuel is injected through downward-facing outlets at or near the bottom end of ring **140**.

In a preferred embodiment, ring **140** is a two-piece ring formed of a ring-shaped insert **141** pressed into a ring-shaped outer housing **143**. Outer housing **143** is ideally integrally formed with the throttle body casting and includes one or more radial spokes **145** protruding therefrom that connect to the walls of bore **112** for securing outer ring housing **143** within bore **112**. At least one spoke **145** for each ring **140** includes a fuel injection conduit **142** that supplies ring **140** with fuel from an injector **104**. Insert **141** fits within outer housing **143**. Insert **141** includes axial grooves **144** intervaled about the exterior circumference of insert **141**. A circumferential groove **146** formed about insert **141** fluidly connects axial outlet grooves **144** with fuel injection conduit **142**, thereby allowing fuel to flow from injector **104** through conduit **142**, through circumferential groove **146**, and through axial grooves **144** to discharge downwardly at or near the bottom end of ring **140**. Although axial grooves **144** and circumferential groove **146** are shown formed in insert **141**, in an alternative embodiment either the axial grooves, the circumferential groove, or both, may be formed within the interior of outer housing **143**.

The design of annular injection ring **140** produces an air/fuel charge with superior mixing for even distribution to the cylinders. Better air-fuel mixing provides for better idle quality, better starting, and better overall drivability throughout the engine rpm range. According to a preferred embodiment of the invention, each injection ring **140** includes six axial outlets **144**, although a greater or lesser number can be used as desired. However, it is desirable that the total cross-sectional area of axial grooves **144** within each injection ring **140** be larger than the total cross-sectional area exiting the corresponding fuel injector **104** so as to lower the kinetic energy of the fuel droplets entering the air stream. In a preferred embodiment, the total cross-sectional area of axial grooves **144** is approximately fifty percent larger than the area exiting fuel injector **104**.

FIG. **6** illustrates the idle air control (IAC) circuitry **120** of fuel injection system **100** according to a preferred embodiment of the invention. Like the IAC circuitry **80** of the prior art throttle body fuel injection system of FIG. **2**, IAC circuitry **120** bypasses throttle blades, which are shut when the engine is idling (although a closed throttle still allows a small amount of air to enter the manifold). IAC circuitry **120** is formed with an opening **122** at the top of the throttle body **102** and an outlet port **124** at the bottom of throttle body **102**. An idle air control motor **126** is used to throttle the amount of air that flows through the bypass circuit **120** by varying the stem of an IAC valve **128** between open and shut positions.

However, unlike the IAC circuitry **80** of the prior art throttle body fuel injection system of FIG. **2**, IAC circuitry **120** includes one or more crossover inlet ports **121** that open between bores **112** below fuel injection ring **140** and IAC bypass circuit **120**. Accordingly, when IAC circuit **80** is bypassing air around throttle plates **118**, an air/fuel mixture is drawn from the region of bores **112** downstream of fuel injection rings **140** through ports **121** into the intake manifold (rather than drawing air only from upstream of the fuel injectors as is done in the prior art injection system of FIG. **2**). By drawing an air fuel mixture into the IAC circuit **80**, the propensity for a lean fuel mixture while idling is lessened. Opening **122** may be left open or may alternatively be plugged.

The tendency for a lean idle fuel mixture is also minimized by a unique ECU algorithm according to a preferred embodiment of the invention. ECU **132** (visible in FIG. **5**) controls the position of IAC motor **126** as a function of one or more inputs, which may include engine rpm, engine load, throttle position, and coolant temperature, so that engine rpm at idle is maintained at a constant desired value regardless of engine load or temperature, for example. For instance, when the vehicle is idling at a traffic signal, if the air conditioning compressor is engaged, the IAC valve **128** may need to be

nearly fully open in order to maintain desired engine speed, but if the air conditioning compressor is disengaged, the IAC valve may only need to be open twenty percent.

In prior art control systems, IAC motor position is not an input variable used in the determination of fuel injection levels. However, as illustrated in the block level schematic diagram of FIG. **7**, ECU **132** employs a unique feed-forward algorithm that increases the pulse widths of the fuel injector signals based on the controlled movement of the IAC motor. This feature allows the initial open-loop-based fuel mixture supplied by system **100** to be more accurate than the initial open-loop-based fuel mixture supplied by prior art system **60** and eliminates rough unstable idle associated with the closed-loop lag times.

A computer processor **150**, such as a microprocessor or microcontroller, is included within ECU **132**. The computer processor **150** controls various engine and automotive systems as preprogrammed functions of numerous signals received from various sensors. Computer memory **152**, which may include both random access memory (RAM) and non-volatile memory such as Flash memory or electrically erasable programmable read-only memory (EEPROM), is in electrical communication with computer processor **150** as is well known to those of ordinary skill in the art of computer system design. Discrete electronic components may be combined in an application-specific integrated circuit (ASIC) as appropriate.

As described in greater detail with respect to FIG. **8**, processor **150** executes an algorithm **160** for controlling the position of IAC motor **126** (FIG. **5**) so as to maintain actual engine idle speed at specified idle target speed. Target idle RPM data **162** are stored in memory **152** and may provide specified idle target speeds as a function of coolant temperature, throttle position, air conditioner settings, or similar inputs. Processor **150** receives an engine speed input **154** and whatever other inputs (not illustrated) are appropriate for the particular IAC algorithm **160** that is implemented. Based on IAC algorithm **160**, processor **150** generates an IAC position output signal **156**, which is proportional to the shaft position of IAC motor **126**. IAC position output signal is thereafter formatted and conditioned for actuating IAC motor **126** as appropriate.

Fuel injector pulsing is controlled by algorithm **164** primarily as a function of engine speed **154** and engine load **158** (e.g., MAP or mass air flow), as is known in the art. Other inputs (not illustrated) including exhaust oxygen levels, manifold air temperature, coolant temperature, and throttle position, may be used, depending on the control system topology. According to a preferred embodiment of the invention, fuel pulse algorithm **164** is unique in that it includes the IAC position output signal **156** as an input. Accordingly, processor **150** generates a fuel pulse width output signal **157** that in open-loop control immediately increases the fuel pulse width output signal **157** as the IAC valve **128** (FIG. **6**) is opened without the lag time associated with closed-loop control based on oxygen sensor readings. The fuel pulse width output signal **157** is thereafter formatted and conditioned for actuating fuel injectors **104** (FIG. **6**) as appropriate.

FIG. **8** is a flowchart diagram of the open-loop control system algorithm implemented by ECU **132** according to a preferred embodiment of the invention. Target idle speed data **162**, volumetric efficiency data **170**, and target air/fuel ratio data **172** are stored in memory **152** of ECU **132** (FIG. **7**). According to IAC algorithm **160** (FIG. **7**), the appropriate target idle rpm value from target idle speed data **162** is summed with the negative feedback of the actual engine rpm value **154**, the result of which comprises the input to a proportional-integral-derivative (PID) controller algorithm **174**. As PID controllers are well known in the art, no further details are provided herein. However, controller topologies other than PID may be used as appropriate. The output of PID controller **174** is a signal **156** that is proportional to the position of IAC motor **126** (FIG. **6**). IAC position signal **156** is converted by an IAC motor driver circuit **176** into an appropriate signal that actuates IAC motor **126**.

An airflow estimator algorithm **178** determines the mass air flow rate into the engine from engine speed **154** and manifold absolute pressure **158** based on the engine's volumetric efficiency factors **170**. Other inputs (not illustrated), such as induction air temperature in the engine's intake manifold and barometric pressure may be used to more accurately determine mass air flow, as is known to routineers of ordinary skill in the art. Next, a fuel pulse width calculation algorithm **184** calculates from the mass air flow rate signal **180** and the target air/fuel ratio table **172** the fuel injection pulse width **182** required to add the required fuel mass to achieve the target air/fuel ratio for that engine speed and load.

According to a preferred embodiment of the invention, a "feed forward" signal **184** that is proportional to IAC position signal **156** is summed with the initial fuel injection pulse width signal **182** so as to add more fuel as the IAC valve **128** (FIG. **6**) is opened. The combined fuel injection pulse width signal **186** is converted into a period waveform having a frequency based on the engine rpm signal **154** with suitable electrical characteristics to actuate fuel injectors **104** (FIG. **6**) by injector driver circuitry **188**.

The Abstract of the disclosure is written solely for providing the United States Patent and Trademark Office and the public at large with a way by which to determine quickly from a cursory reading the nature and gist of the technical disclosure, and it represents solely a preferred embodiment and is not indicative of the nature of the invention as a whole.

While some embodiments of the invention have been illustrated in detail, the invention is not limited to the embodiments shown; modifications and adaptations of the above embodiment may occur to those skilled in the art. Such modifications and adaptations are in the spirit and scope of the invention as set forth herein:

What is claimed is:

1. A fuel injection system (**100**) comprising:

a throttle body assembly (**102**) defining an outlet side that is dimensioned to mount atop an intake manifold of an internal combustion engine, said throttle body assembly having a bore (**112**) formed therethrough opening into said outlet side and including a throttle valve (**118**) disposed in said bore;

a fuel injector (**104**) mounted to said throttle body assembly so as to inject fuel into said bore at a first point upstream of said throttle valve;

an idle air control passage (**120**) formed through said throttle body defining an outlet port (**124**) in fluid communication with said bore at said outlet side, an opening (**122**) at a top of the throttle body opposite said outlet side, and an inlet port (**121**) in fluid communication with said bore at a second point that is downstream of said first point and upstream of said throttle valve; and

an idle air control valve (**128**) disposed within said idle air control passage for selectively isolating said inlet port from said outlet port.

2. The fuel injection system of claim **1** further comprising:

a controller (**132**) operatively coupled to said fuel injector and arranged for increasing an amount of fuel injected by said fuel injector as a function of a position of said idle air control valve.

3. The fuel injection system of claim 2 wherein:

said controller (132) includes driver circuitry (188) for creating a periodic pulse signal to actuate said fuel injector; and

said controller (132) includes a first algorithm for determining a pulse width (186) of said periodic pulse signal as a function of the sum of a first value (182) that is representative of an initial fuel pulse width and a second value (184) that is representative of a position of said idle air control valve.

4. The fuel injection system of claim 3 wherein:

said controller (132) includes a second algorithm for determining said first value from a third value (180) that is representative of an air flow into said internal combustion engine and a fourth value (172) that is representative of a target air/fuel ratio.

5. The fuel injection system of claim 4 wherein:

said controller (132) includes a third algorithm for determining said third value from a fifth value (154) that is representative of a rotational speed of said internal combustion engine, a sixth value (158) that is representative of a load imposed on said internal combustion engine, and a seventh value (170) that is representative of a volumetric efficiency of said internal combustion engine.

6. A fuel injection system (100) comprising:

a throttle body assembly (102) defining an outlet side that is dimensioned to mount atop an intake manifold of an internal combustion engine, said throttle body assembly having a bore (112) formed therethrough opening into said outlet side and including a throttle valve (118) disposed in said bore;

a fuel injector (104) mounted to said throttle body assembly so as to inject fuel into said bore at a first point upstream of said throttle valve; and

an idle air control circuit (120) formed through said throttle body so as to selectively bypass said throttle valve, said idle air control circuit having an inlet opening (121) in said bore at a location downstream of said first point and an opening (122) at a top of said throttle body assembly opposite said outlet side.

7. The fuel injection system of claim 6 further comprising:

an idle air control valve (128) disposed within said idle air control circuit for selectively bypassing said throttle valve.

8. The fuel injection system of claim 7 further comprising:

an idle air control motor (126) connected to said idle air control valve for actuating said idle air control valve; and

a controller (132) operatively coupled to said fuel injector and arranged for increasing an amount of fuel injected by said fuel injector as a function of a position of said idle air control valve.

9. The fuel injection system of claim 8 wherein:

said controller (132) includes driver circuitry (188) for creating a periodic pulse signal to actuate said fuel injector; and

said controller (132) includes a first algorithm for determining a pulse width (186) of said periodic pulse signal as a function of the sum of a first value (182) that is representative of an initial fuel pulse width and a second value (184) that is representative of a position of said idle air control valve.

10. The fuel injection system of claim 9 wherein:

said controller (132) includes a second algorithm for determining said first value from a third value (180) that is representative of an air flow into said internal combustion engine and a fourth value (172) that is representative of a target air/fuel ratio.

11. The fuel injection system of claim 10 wherein:

said controller (132) includes a third algorithm for determining said third value from a fifth value (154) that is representative of a rotational speed of said internal combustion engine, a sixth value (158) that is representative of a load imposed on said internal combustion engine, and a seventh value (170) that is representative of a volumetric efficiency of said internal combustion engine.

12. A fuel injection system (100) comprising:

a throttle body assembly (102) defining an outlet side that is dimensioned to mount atop an intake manifold of an internal combustion engine, said throttle body assembly having a bore (112) formed therethrough opening into said outlet side and including a throttle valve (118) disposed in said bore;

a fuel injector (104) mounted to said throttle body assembly so as to inject fuel into said bore at a first point upstream of said throttle valve having first axial distance from said outlet side;

an idle air control passage (120) formed through said throttle body defining an outlet port (124) in fluid communication with said bore at said outlet side, an opening (122) at a top of said throttle body assembly opposite said outlet side and an inlet port (121) in fluid communication with said bore at a second point that is downstream of said first point and upstream of said throttle valve;

an idle air control valve (128) disposed within said idle air control passage; and

a controller (132) operatively coupled to said fuel injector and arranged for increasing an amount of fuel injected by said fuel injector as a function of a position of said idle air control valve.

13. The fuel injection system of claim 12 wherein:

said controller (132) includes driver circuitry (188) for creating a periodic pulse signal to actuate said fuel injector; and

said controller (132) includes a first algorithm for determining a pulse width (186) of said periodic pulse signal as a function of the sum of a first value (182) that is representative of an initial fuel pulse width and a second value (184) that is representative of a position of said idle air control valve.

14. The fuel injection system of claim 13 wherein:

said controller (132) includes a second algorithm for determining said first value from a third value (180) that is representative of an air flow into said internal combustion engine and a fourth value (172) that is representative of a target air/fuel ratio.

15. The fuel injection system of claim 14 wherein:

said controller (132) includes a third algorithm for determining said third value from a fifth value (154) that is representative of a rotational speed of said internal combustion engine, a sixth value (158) that is representative of a load imposed on said internal combustion engine, and a seventh value (170) that is representative of a volumetric efficiency of said internal combustion engine.

* * * * *