US 20100100849A1

(19) United States

(12) Patent Application Publication

Fram

(10) Pub. No.: US 2010/0100849 A1

(43) Pub. Date: Apr. 22, 2010

(54) USER INTERFACE SYSTEMS AND METHODS

(75) Inventor: **Evan K. Fram**, Paradise Valley, AZ (US)

Correspondence Address:
KNOBBE MARTENS OLSON & BEAR LLP
2040 MAIN STREET, FOURTEENTH FLOOR
IRVINE, CA 92614 (US)

(73) Assignee: **DR SYSTEMS, INC.**, San Diego, CA (US)

(21) Appl. No.: **12/577,949**

(22) Filed: **Oct. 13, 2009**

Related U.S. Application Data

(60) Provisional application No. 61/107,621, filed on Oct. 22, 2008.

Publication Classification

(51) **Int. Cl.**
G06F 3/048 (2006.01)

(52) **U.S. Cl.** **715/835**; 715/856; 715/702; 715/814

(57) **ABSTRACT**

Systems and methods for providing user interfaces are disclosed. In certain embodiments, a menu having a number of icons can be provided on a display device such that the icons are arranged around an initial cursor position, or an area that is touched by a user's finger or stylus, for example. Due to the icons being arranged around the initial cursor position, any one of the icons from the menu can be chosen with relatively small cursor movement. In certain embodiments, the menu can be divided into regions that overlap with the icons, such that cursor movement from the initial cursor position into a given region has a similar effect as movement into the corresponding icon itself (without actually moving the cursor onto the desired icon).

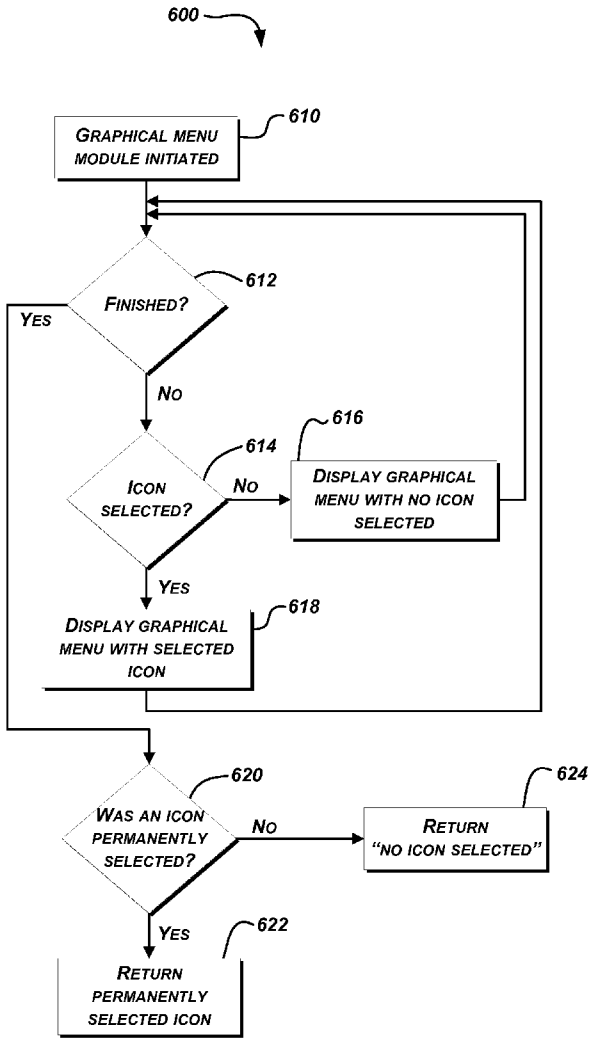

APPLE EXHIBIT 1017

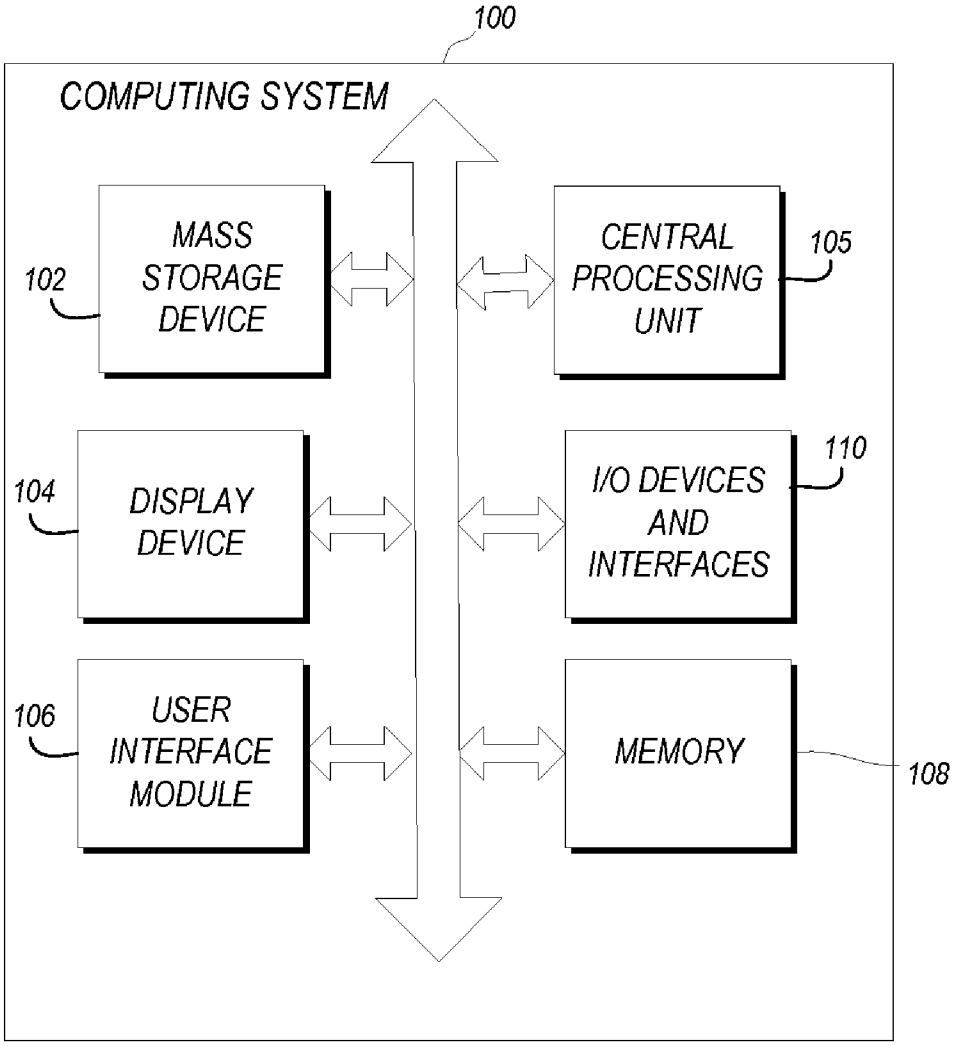
100
COMPUTING SYSTEM
MASS STORAGE DEVICE
102
CENTRAL PROCESSING UNIT
105
DISPLAY DEVICE
104
I/O DEVICES AND INTERFACES
110
USER INTERFACE MODULE
106
MEMORY
108

Fig. 1a

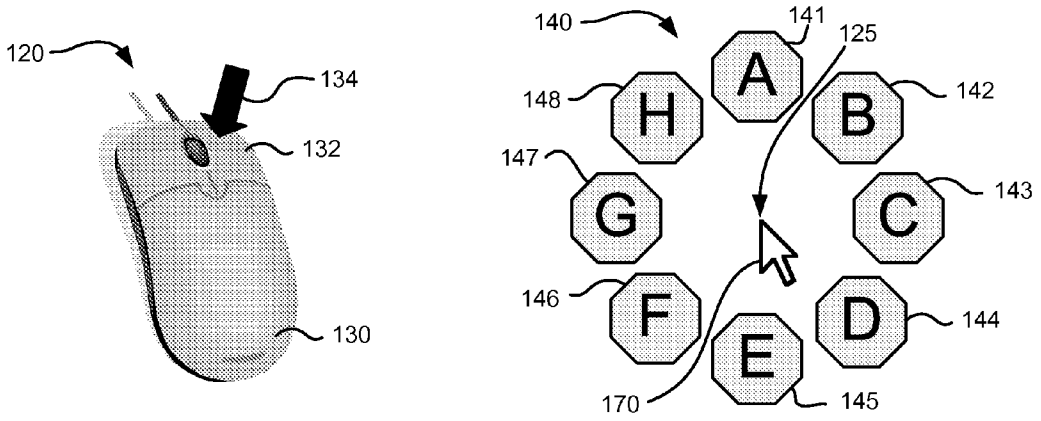

Fig. 1b

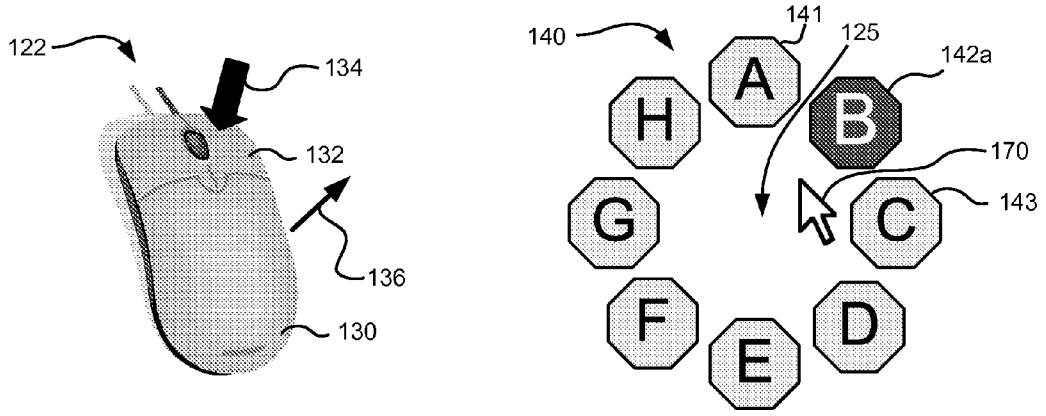

Fig. 1c

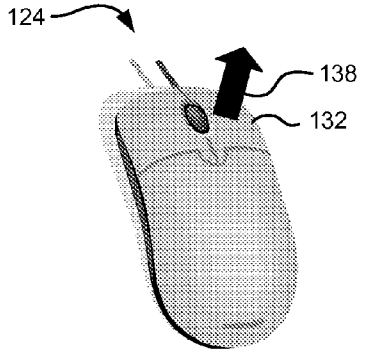

Fig. 1d

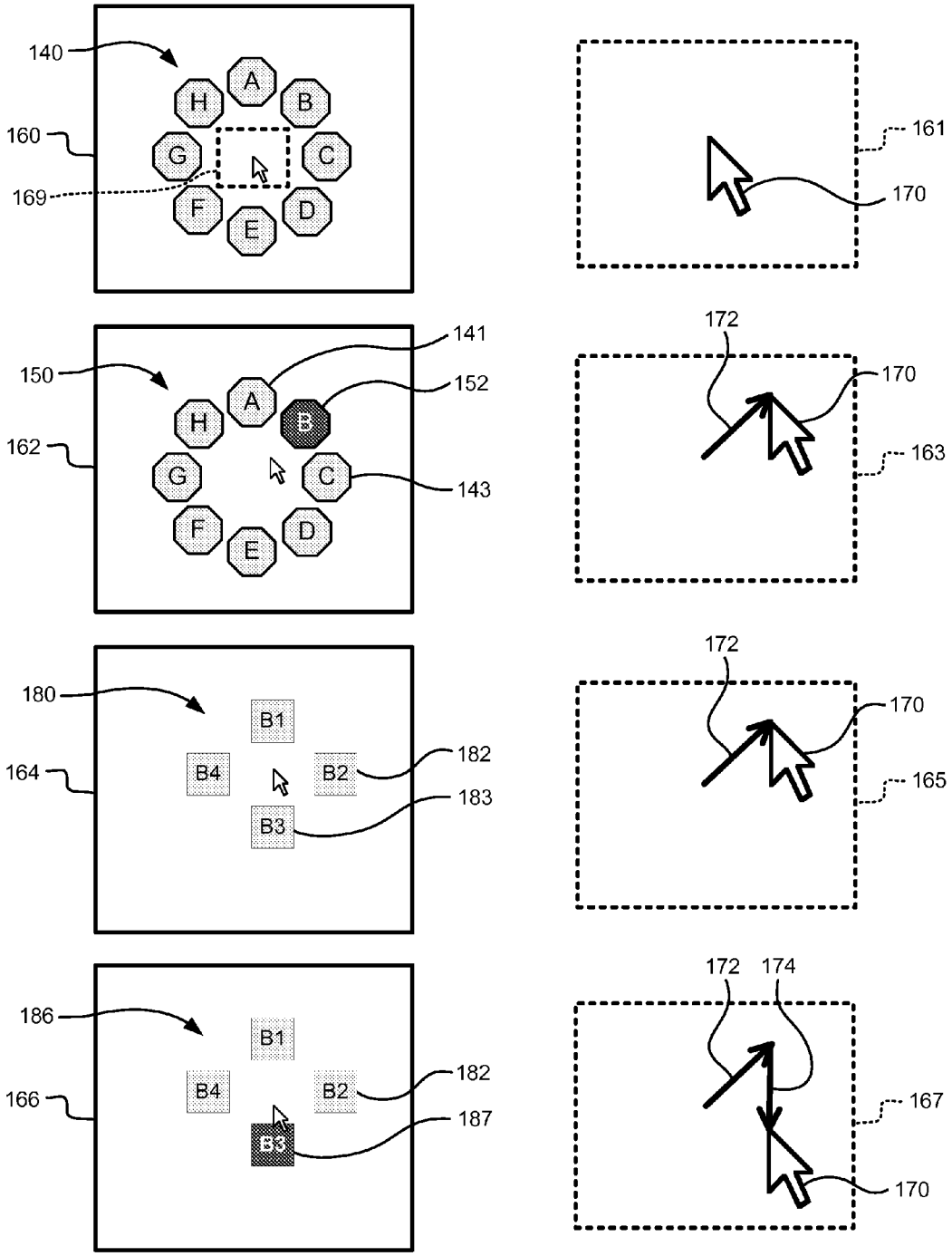
140
160
169
A
B
C
D
E
F
G
H
161
170
150
162
141
152
143
172
163
180
164
B1
B2
B3
B4
182
183
165
186
166
187
174
167

Fig. 1e

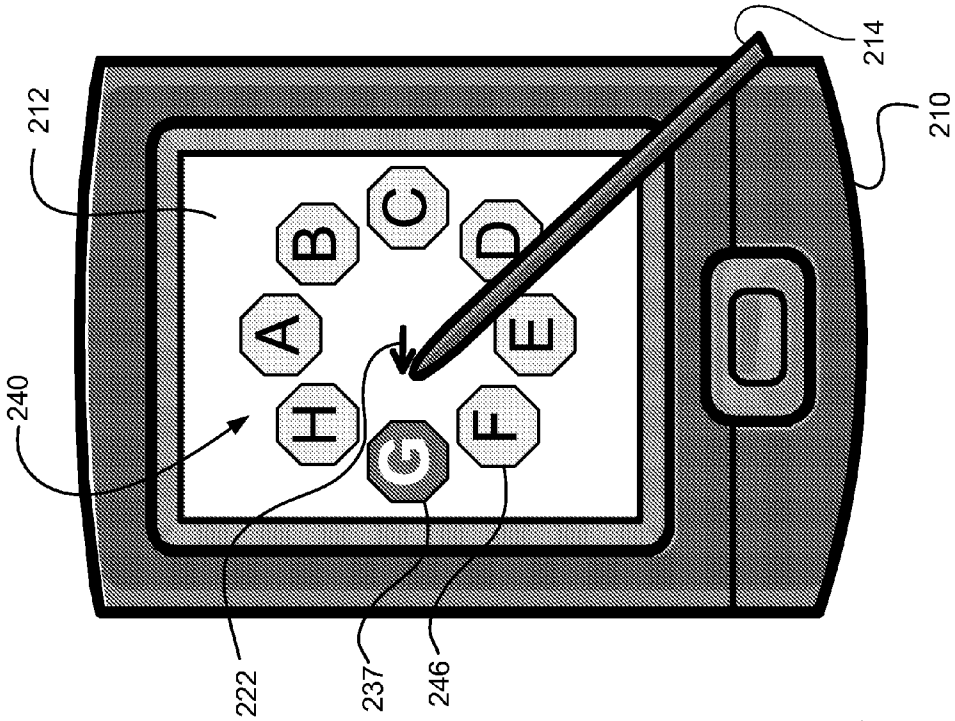
212
240
A
B
C
D
E
F
G
H
222
237
246
214
210

Fig. 2b

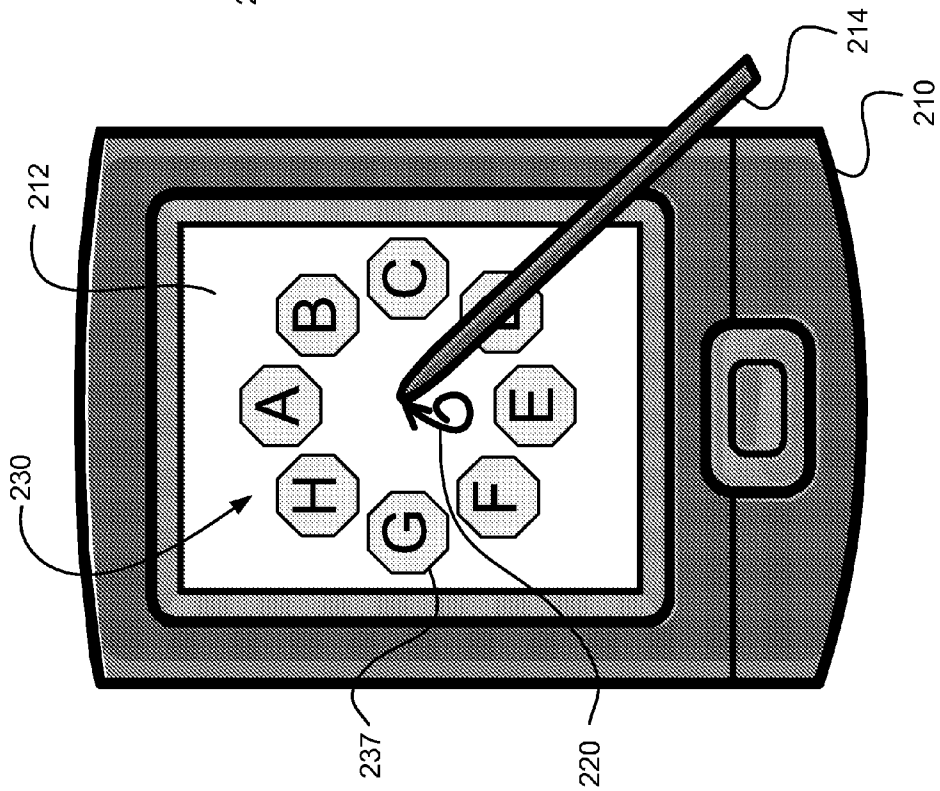
212
230
A
B
C
E
F
G
H
237
220
214
210

Fig. 2a

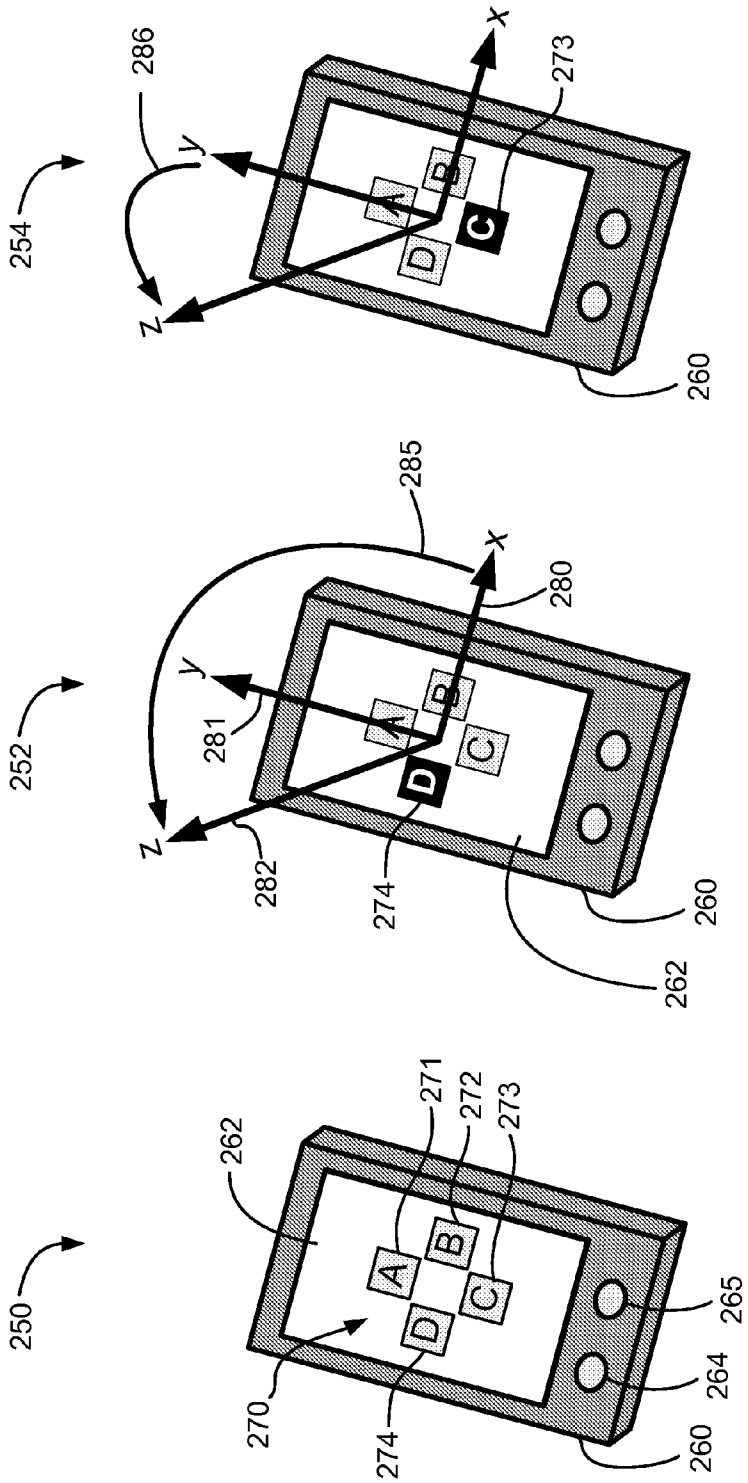
250
252
254
262
270
271
272
273
274
260
264
265
280
281
282
285
286
x
y
z
A
B
C
D

Fig. 2c

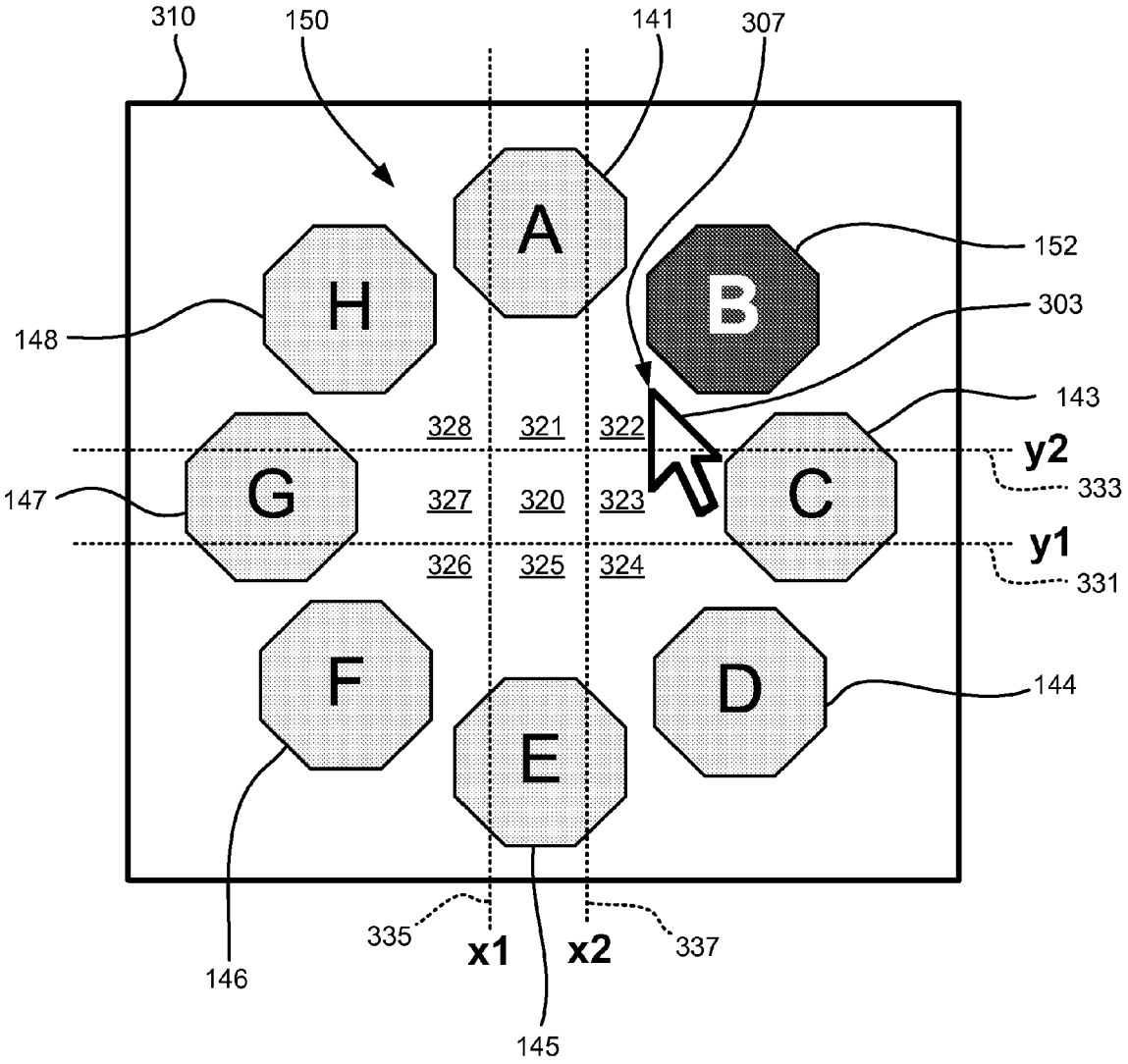
310
150
141
307
A
B
H
152
303
148
143
328
321
322
y2
333
G
C
147
327
320
323
y1
326
325
324
331
F
D
144
E
335
x1
x2
337
146
145

Fig. 3

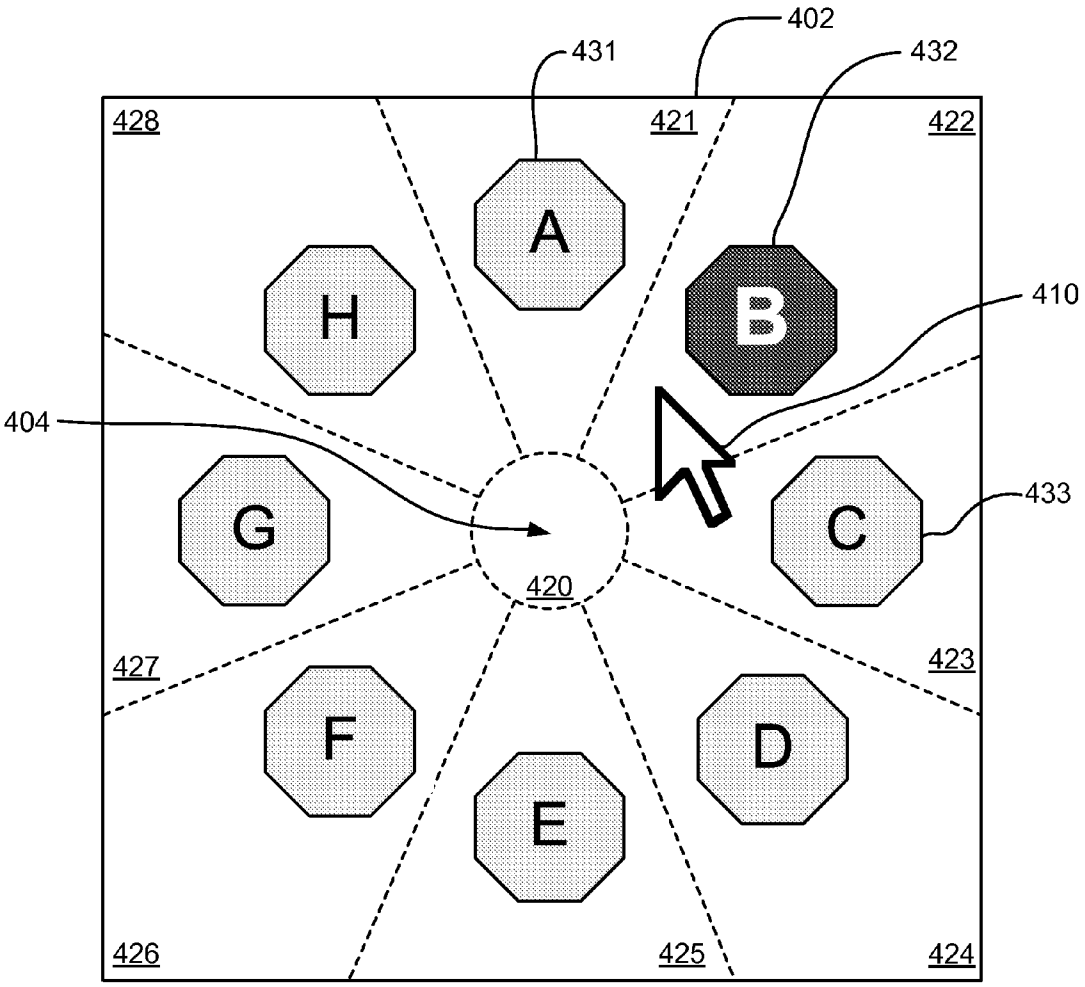
402
431
432
428
421
422
A
H
B
410
404
G
C
433
420
427
423
F
D
E
426
425
424

Fig. 4a

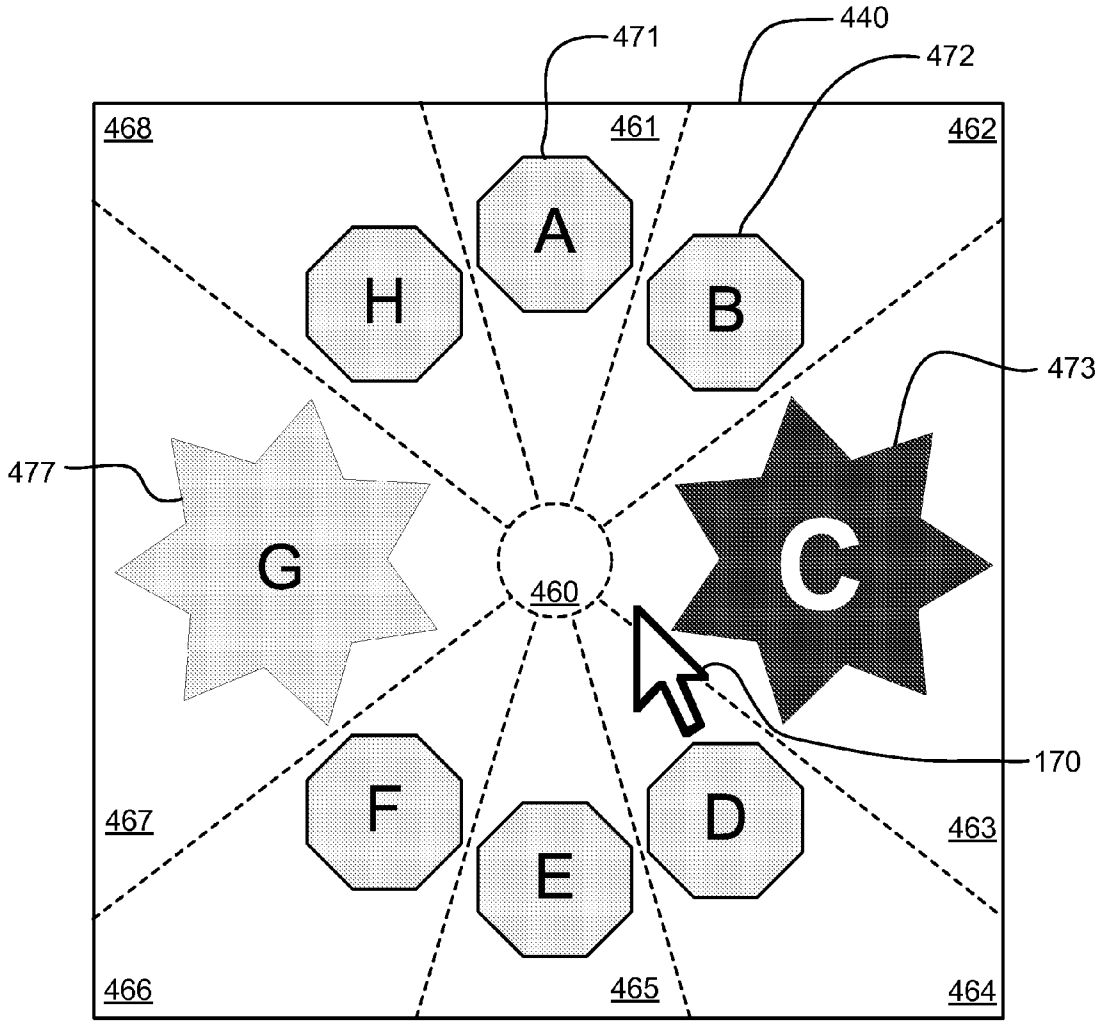
471
440
472
468
461
462
A
H
B
473
477
G
460
C
170
F
D
467
463
E
466
465
464

Fig. 4b

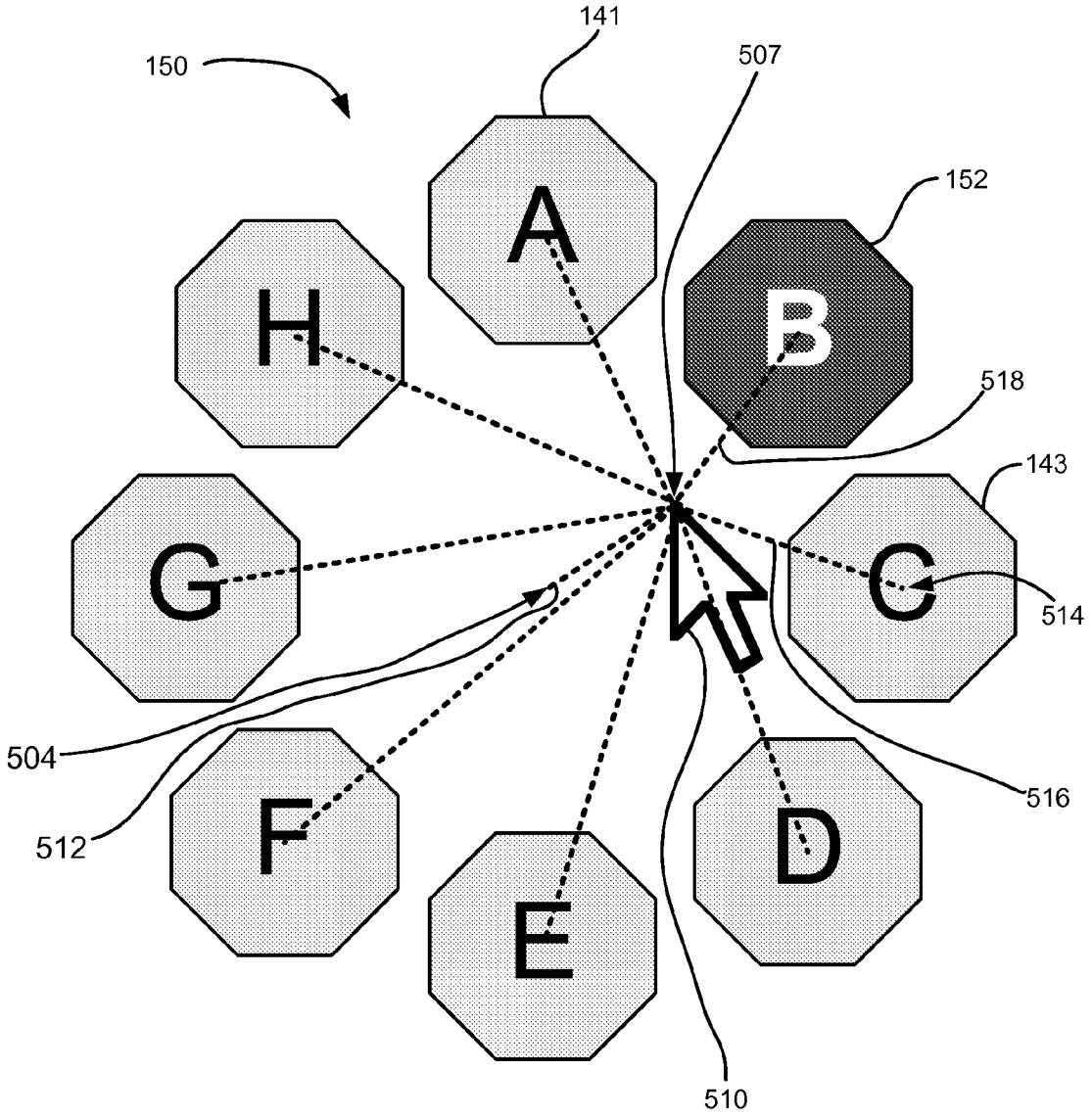

Fig. 5a

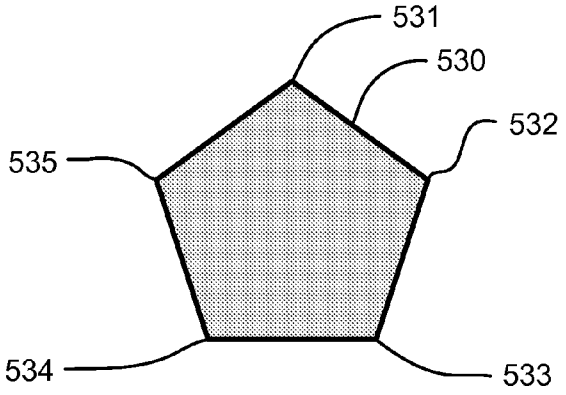

Fig. 5b

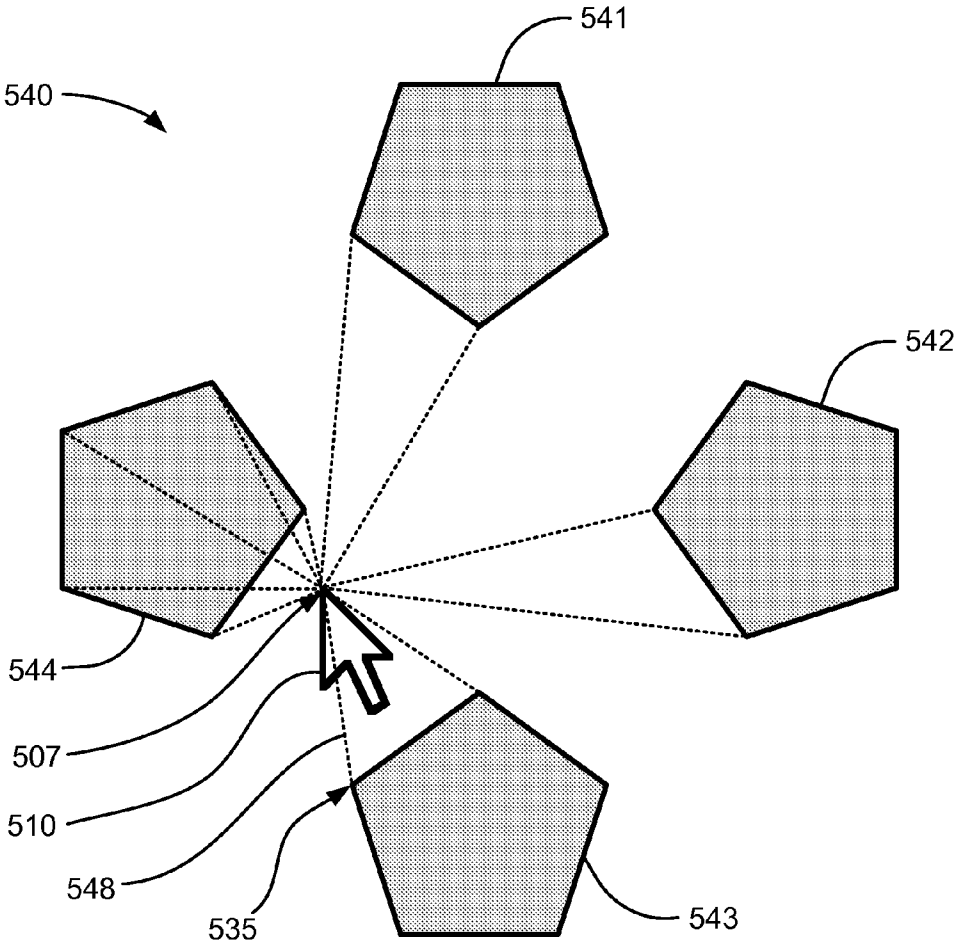

Fig. 5c

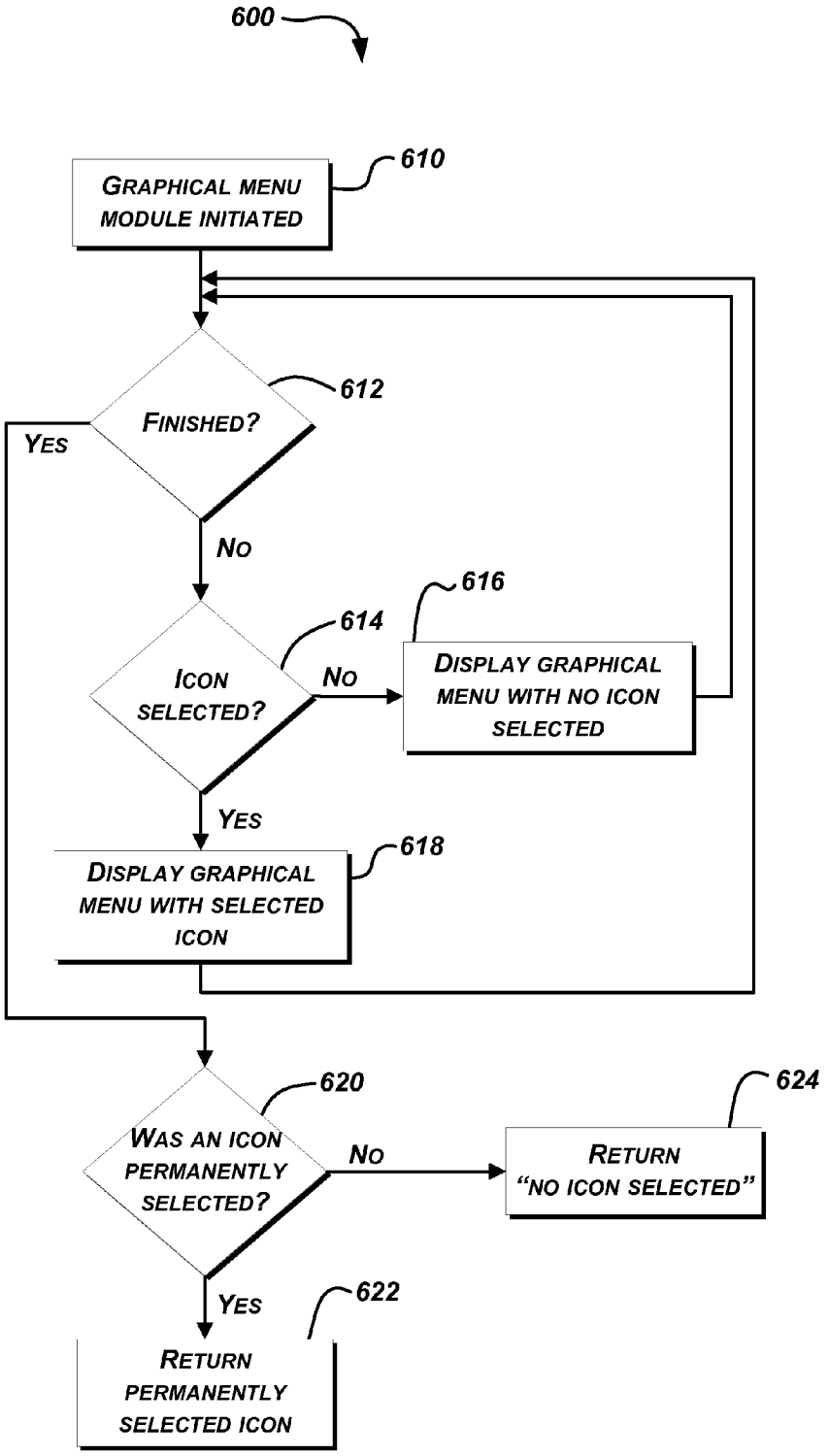
600
GRAPHICAL MENU MODULE INITIATED
610
FINISHED?
612
YES
NO
ICON SELECTED?
614
NO
DISPLAY GRAPHICAL MENU WITH NO ICON SELECTED
616
YES
DISPLAY GRAPHICAL MENU WITH SELECTED ICON
618
WAS AN ICON PERMANENTLY SELECTED?
620
NO
RETURN "NO ICON SELECTED"
624
YES
RETURN PERMANENTLY SELECTED ICON
622

Fig. 6a

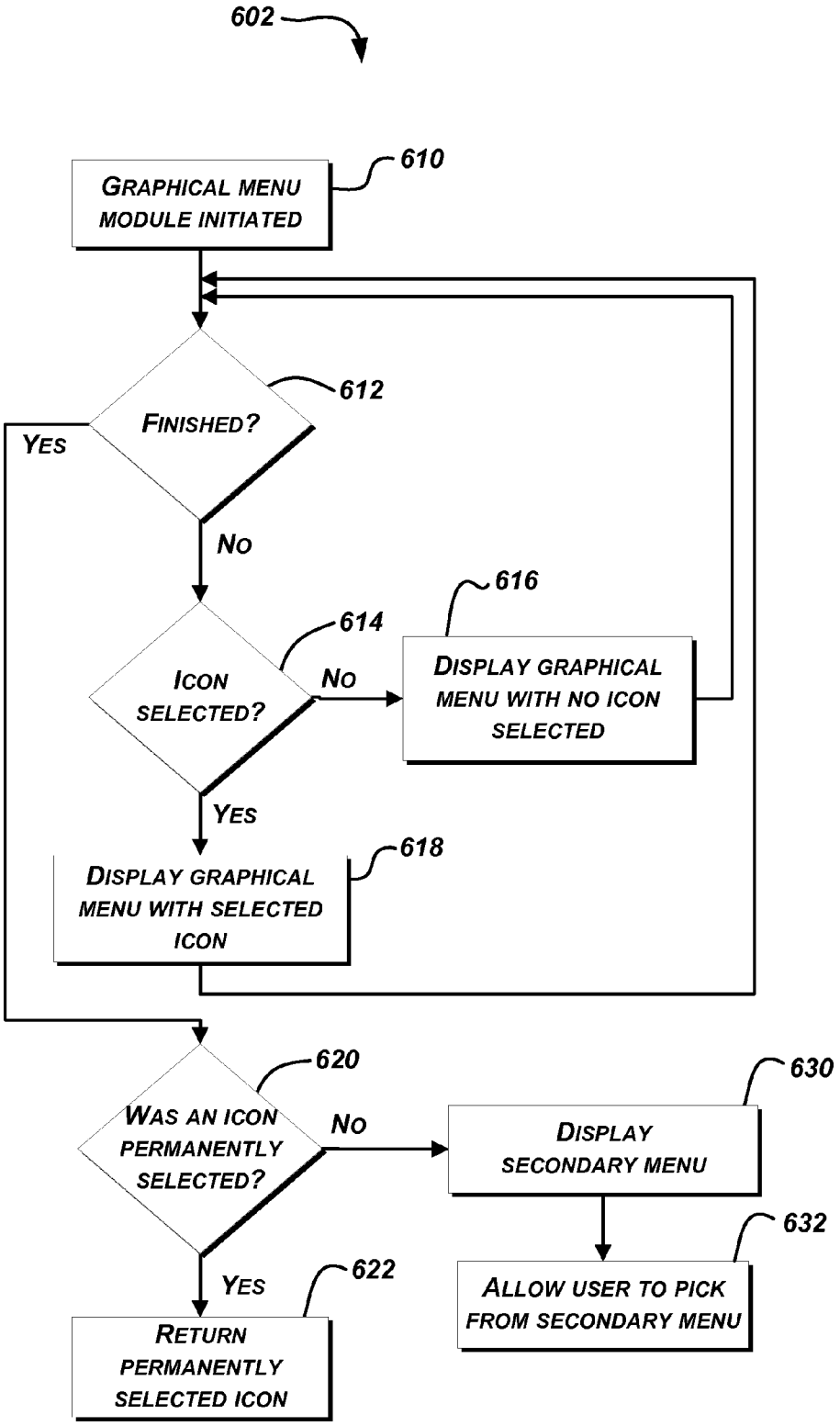
602
610
GRAPHICAL MENU MODULE INITIATED
612
FINISHED?
YES
NO
614
ICON SELECTED?
NO
616
DISPLAY GRAPHICAL MENU WITH NO ICON SELECTED
YES
618
DISPLAY GRAPHICAL MENU WITH SELECTED ICON
620
WAS AN ICON PERMANENTLY SELECTED?
NO
630
DISPLAY SECONDARY MENU
632
ALLOW USER TO PICK FROM SECONDARY MENU
YES
622
RETURN PERMANENTLY SELECTED ICON

Fig. 6b

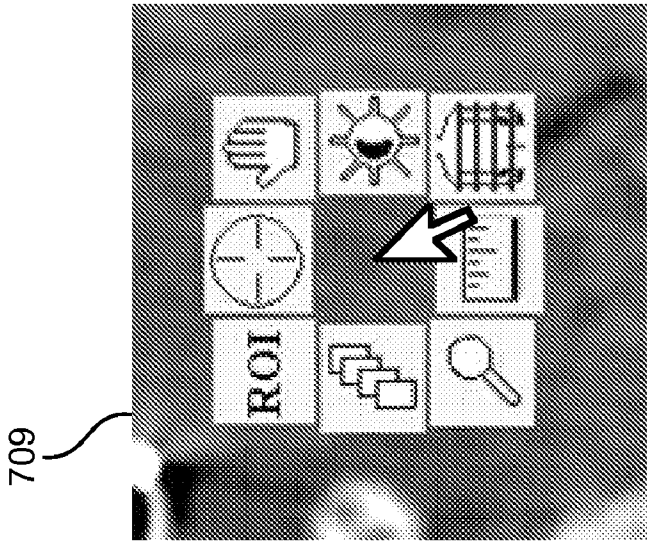

Fig. 7b

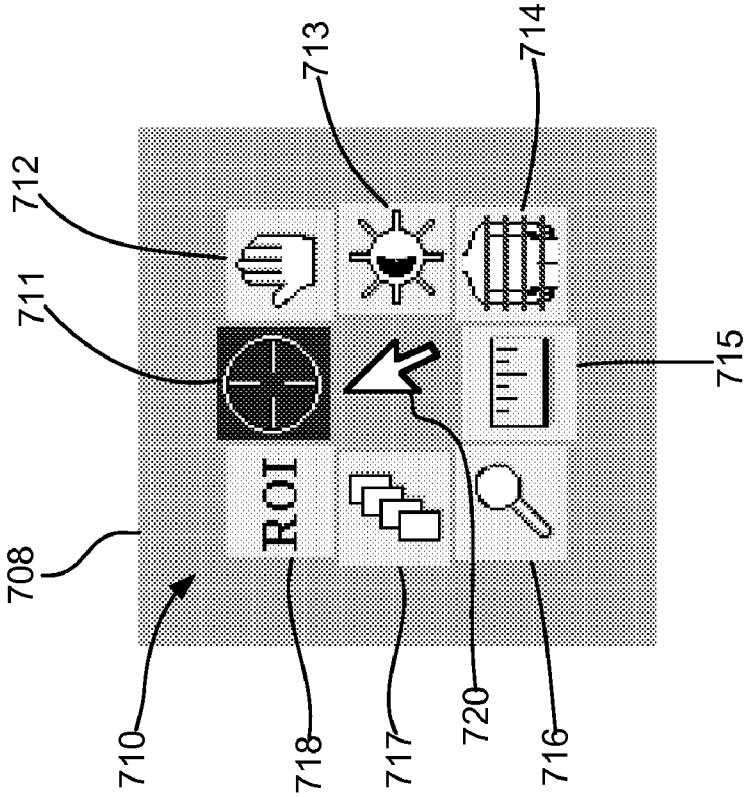

Fig. 7a

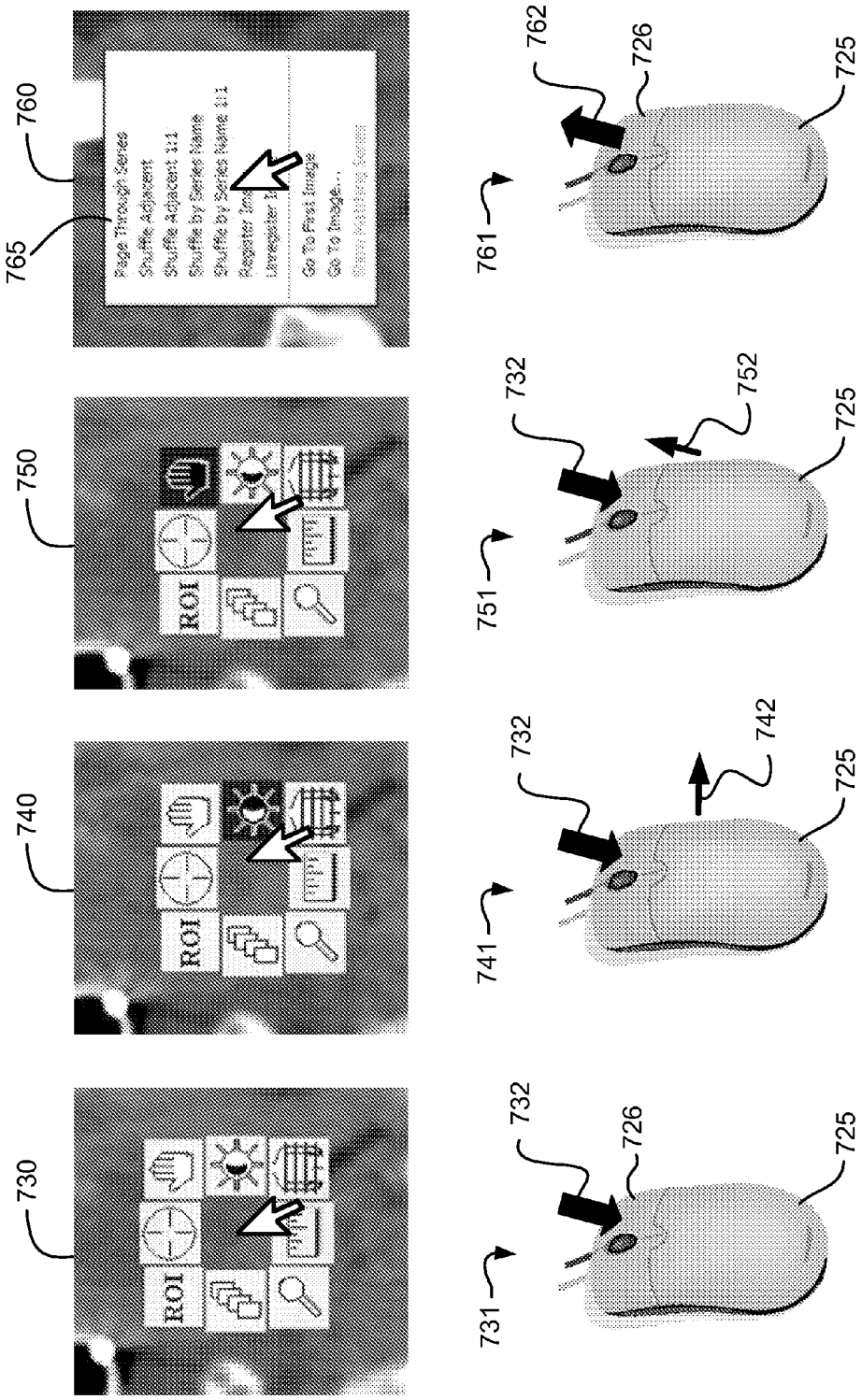
730
ROI
731
732
726
725
740
ROI
741
732
742
725
750
ROI
751
732
752
725
760
765
Page Through Series
Shuffle Adjacent
Shuffle Adjacent 1:1
Shuffle by Series Name
Shuffle by Series Name 1:1
Go To First Image
Go To Image...
761
762
726
725

Fig. 7c

USER INTERFACE SYSTEMS AND METHODS

CROSS-REFERENCE TO RELATED APPLICATIONS

[0001] This application claims priority under 35 U.S.C. §119(e) to U.S. Provisional Application Ser. No. 61/107,621, filed on Oct. 22, 2008, which is hereby expressly incorporated by reference in its entirety.

BACKGROUND

[0002] 1. Field

[0003] This invention relates to computing devices and, more particularly, to systems and methods of providing user interface for computing devices.

[0004] 2. Description of the Related Art

[0005] In many computer uses, a user selects from a menu displayed on an interface such as a screen. Such selection can be achieved by, for example, a cursor based input. An interface device such as a mouse can move the cursor to a desired location for activating an icon of the menu.

[0006] In many situations, such cursor movement can cover significant distances on the screen. Repetition of cursor movements can result in user fatigue, frustration, and repetitive motion injury. Additionally, while each individual movement to a menu of a software application may require little time, repeated use of the menu over time results in a significant amount of cumulative time spent, reducing user productivity and efficiency.

SUMMARY

[0007] In one embodiment, a method for providing a user interface on a computing device comprises displaying a first menu on a display of a computing device, the first menu having a first plurality of icons arranged in an icon region that extends substantially around an initial position of a cursor, wherein the icon region defines a central region within the icon region that includes the initial cursor position. In one embodiment, the method further comprises detecting movement of the cursor to a second position within the central region, wherein the second position of the cursor is near a first icon of the first plurality of icons or includes at least a portion of the first icon, changing an appearance of the first icon in response to detecting movement of the cursor to the second position, wherein the change in appearance indicates that the icon is temporarily selected, initiating a first action associated with the first icon in response to detecting an input from the user indicating that the first icon should be permanently selected, wherein at least some of the method is performed by the computing device.

[0008] In one embodiment, a method for providing a user interface on a computing device comprises displaying a first menu on a display of the computing device, the first menu having a plurality of icons arranged substantially around a current position of a cursor, the plurality of icons defining a central region of the display between the plurality of icons and including the current position of the cursor, receiving a first input indicative of movement of the cursor, determining which of the plurality of icons is to be temporarily selected based at least in part on a pattern of the first input within the central region, and temporarily selecting the determined icon.

[0009] In one embodiment, a computing system comprises a display screen, an input device configured to facilitate interaction with a user, and a processor configured to execute software code that causes the computing system to display a menu on the display screen, the menu having a plurality of icons arranged about a home region, detect an input facilitated by the input device and indicative of the user's desire to at least temporarily select one of the icons, and determine which of the icons is to be at least temporarily selected based at least in part on a pattern of the input, the pattern involving at least a part of the home region.

[0010] In one embodiment, a method for providing a user interface on a computing device comprises displaying a first menu on a display of a computing device, the first menu having a first plurality of icons arranged in an icon region that extends substantially around an interaction position, wherein the interaction position comprises an area of the display where a user or an apparatus controlled by a user touched the display, a current position of a cursor, or a predetermined position on the display. In one embodiment, the method further comprising receiving a first user-initiated input indicative of movement from the interaction position, and in response to the movement, selecting an icon associated with a direction of the first user-initiated input, wherein at least some of the method is performed by the computing device.

BRIEF DESCRIPTION OF THE DRAWINGS

[0011] FIG. **1***a* is a block diagram illustrating one embodiment of a computing system that may be used to implement certain systems and methods described herein.

[0012] FIG. **1***b* illustrates an example of a graphical menu and an example of mouse activity that could be used to initiate its display.

[0013] FIG. **1***c* illustrates mouse activity that could be used to temporality select an icon within the graphical menu of FIG. **1***b*.

[0014] FIG. **1***d* illustrates mouse activity that could be used to permanently select the temporarily selected icon of FIG. **1***c*.

[0015] FIG. **1***e* illustrates how icons within a graphical menu, and icons of a second graphical menu, can be selected in response to exemplary movements of a cursor.

[0016] FIG. **2***a* illustrates an example use of a graphical menu on a handheld device, such as a cellular phone, PDA, or tablet computer.

[0017] FIG. **2***b* further illustrates the use of a graphical menu on a handheld device, such as a cellular phone, PDA, or tablet computer.

[0018] FIG. **2***c* illustrates an example use of a graphical menu on another handheld device that has the ability to monitor its position or movement.

[0019] FIG. **3** is a diagram illustrating screen regions of a sample graphical menu, where movement of the cursor between the screen regions in certain manners may be used to determine which icon within the graphical menu has been temporarily and/or permanently selected by the user.

[0020] FIG. **4***a* is a diagram illustrating another embodiment of a graphical menu including screen regions that may be used to determine which icon within the graphical menu has been selected by the user.

[0021] FIG. **4***b* is a diagram illustrating another embodiment of a graphical menu including screen regions that may be used to determine which icon within the graphical menu has been selected by the user.

[0022] FIG. **5***a* is a diagram illustrating another embodiment of a graphical menu.

[0023] FIG. **5***b* illustrates an icon with multiple icon location points.

[0024] FIG. **5***c* illustrates a graphical menu including icons with multiple icon location points.

[0025] FIG. **6***a* is a flowchart illustrating one embodiment of a method for operating a graphical menu.

[0026] FIG. **6***b* is a flowchart illustrating another embodiment of a method for operating a graphical menu.

[0027] FIG. **7***a* illustrates an exemplary graphical menu superimposed on a homogenous screen.

[0028] FIG. **7***b* illustrates an exemplary graphical menu superimposed on a complex screen output of a program that called the graphical menu.

[0029] FIG. **7***c* illustrates sample user interactions with the graphical menu illustrated in FIG. **7***b*.

DETAILED DESCRIPTION OF CERTAIN EMBODIMENTS

[0030] Embodiments of the user interface will now be described with reference to the accompanying figures, wherein like numerals refer to like elements throughout. The terminology used in the description presented herein is not intended to be interpreted in any limited or restrictive manner, simply because it is being utilized in conjunction with a detailed description of certain specific embodiments of the invention. Furthermore, embodiments of the user interface may include several novel features, no single one of which is solely responsible for its desirable attributes or which is essential to practicing the inventions herein described.

[0031] People spend large amounts of time interacting with computers and computer like devices such as cell phones, PDAs, gaming devices and portable media players. There is a need for improved ways of interacting with these and other devices that: improves speed and efficiency; reduces repetitive motion injury; is more intuitive; and/or operates well on small display screens.

[0032] Various systems and methods described herein address some or all of these issues with embodiments of a flexible graphical menu and an efficient method of interacting with it. While embodiments of the user interface will be illustrated using display of a graphical menu, sound could be used as a supplement or replacement for display of the graphical menu, as will be discussed below.

User Interfaces and Menus

[0033] User interfaces are described herein for depicting data on a display device of a computer, where the term "computer" is meant to include any of the computing devices described above, as well as any other electronic device that includes a display and/or other audio output device. Depending on the embodiment, the user interfaces described herein may provide one or more of several advantages. For example, a user interface may include a graphical menu that appears on demand so it does not take up room on the display screen until it is needed. This reduces screen clutter and is especially useful with small screens as there is no need to devote screen pixels to display the menu until it is needed. In another example, the user does not have to move the screen cursor large distances to initiate display of the graphical menu.

[0034] In yet another example, the graphical menu appears in a home region, which includes an area surrounding a current cursor position in one embodiment, or other area with which the user is likely interfacing with. Therefore, the user does not need to direct his attention to other areas of the screen, which may provide a particular advantage when users are concentrating on analyzing content of screen. In yet another example, the user can pick an icon (e.g., that is representative of a function that may be performed by a software application) within a graphical menu with only minimal mouse movement. In some embodiments, it is not necessary for the user to position the cursor over an icon or click on it, but only move slightly toward it. This may increase user speed and efficiency. In addition, the reduction in mouse movement has the potential to reduce repetitive motion injury, particularly in applications where users interface with computers for many hours per days, for example: radiologists reading medical imaging exams on Picture Archive and Communication Systems; office workers who spend hours per day with email, word processing, and spreadsheet applications, for example; web surfing; and/or computer gaming.

[0035] In another example, the systems and methods described herein may provide visual and/or auditory feedback as to which of the items in a graphical menu has been chosen and the user can vary mouse position and dynamically change the selected icon. In yet another example, once a user learns the relative positions of icons within a graphical menu, there is no need for the user to visually examine the presented menu; rather, the user may rapidly choose the desired icon by moving the mouse (or other input device) in the remembered direction (or pattern of directions) of the desired icon(s).

[0036] The present disclosure is presented generally in the following structure. Some terms as used herein are defined for clarity. An embodiment of an exemplary computing system, which is actually representative of any computing system on which user interfaces may be display and interfaced with by a user, is described with reference to FIG. **1***a*. FIGS. **1***b*-**1***e* illustrate sample conceptual configurations of menus, and exemplary navigation thereof. Embodiments of the user interface systems and methods for use on computing devices with small screens or other systems without a mouse, such as a cell phone, PDA, gaming device, MP3 or media player, or tablet PC, are described in conjunction with FIG. **2***a* and FIG. **2***b*. An example embodiment on a handheld device that can sense movement or position, such as an Apple iPhone or iTouch, will be described in conjunction with FIG. **2***c*. Methods for determining icon selection within a graphical menu based on cursor position will be described in conjunction with FIGS. **3**, **4***a*-**4***b*, and **5***a*-**5***c*. FIGS. **6***a* and **6***b* are flowcharts illustrating operation of a computing device according to embodiments. Another embodiment including computer screen examples is discussed in conjunction with FIGS. **7***a*-**7***c*. Other contemplated embodiments are discussed, including use of sound as a supplement to or replacement for display of a graphical menu.

DEFINITIONS OF CERTAIN TERMS

[0037] A "graphical menu" can include one or more graphical or textual objects, such as icons, where each of the objects is representative of a particular menu option.

[0038] An "icon" can be a component of a graphical menu that could be anything displayed on the screen that is visually distinguishable, such as a picture, button, frame, drawing, text, etc.

[0039] An "initial cursor position" can include a screen location of a cursor at the time the graphical menu system is initiated. The graphical menu is typically displayed around

the initial cursor position and sufficient movement from this position is typically required for an icon to be selected.

[0040] A "home region" is the region around the initial cursor position, and including the initial cursor position. The home region may extend different distances from the initial cursor position, such as just a distance of a few millimeters on the display device to a few centimeters or more on the display device. Depending on the embodiment, the home region may be centered around the initial cursor position or may be offset such that the initial cursor position is closer to one edge (e.g., a top edge) of the home region than to an opposite edge (e.g., the bottom edge) of the home region. A home region may also be determined based on a location where a user has interfaced with a display device, where there may not be a cursor at all, such as a location where a touchscreen was touched by a finger or stylus of the user or where the finger or stylus moved in a predetermined pattern on the touchscreen.

[0041] A "temporarily selected icon" can include an icon within a graphical menu that has been temporarily chosen by the user, but has not yet been selected such that the particular menu option associated with the temporarily selected icon has not yet been initiated. Rather, the graphical menu is displayed so that the user can confirm that the temporarily selected icon is the desired icon. If the user is not satisfied with the indicated temporary selection, the user can choose a different icon within the graphical menu or choose no icon. A temporarily selected icon may be displayed in such a way as to allow the user to visually distinguish it from icons that are not temporarily selected.

[0042] A "permanently selected icon" (or simply "selected icon") can include an icon that has been selected by the user. When an icon is permanently selected, a software function associated with the icon is initiated by the program or operating system. An icon may be permanently selected in various manners, depending on the embodiment, some of which are described in further detail below.

Computing Systems

[0043] In some embodiments, the computing devices, computing systems, mobile devices, workstations, computer clients and/or servers described herein may comprise various combinations of components, such as the exemplary combinations of components illustrated in FIG. **1***a*-**1***e*. Discussion herein of one or more specific types of computing devices should be construed to include any other type of computing device. Thus, a discussion of a method performed by a mobile computing device is also contemplated for performance on a desktop workstation, for example.

[0044] FIG. **1***a* is a block diagram illustrating one embodiment of a computing system **100** that may be used to implement certain systems and methods described herein. For example, the computing system **100** may be configured to execute software modules that cause the display of a menu around an area of focus (e.g., a current cursor position or a position on a touch screen that is touched by a finger or stylus) on a display device **104**. Below is a description of exemplary components of the computing system **100**.

[0045] The computing system **100** includes, for example, a personal computer that is IBM, Macintosh, or Linux/Unix compatible. In one embodiment, the computing system **100** comprises a server, a desktop computer, a laptop computer, a mobile computer, a cell phone, a personal digital assistant, a gaming system, a kiosk, an audio player, any other device that utilizes a graphical user interface (including office equipment, automobiles, airplane cockpits, household appliances, automated teller machines, self-service checkouts at stores, information and other kiosks, ticketing kiosks, vending machines, industrial equipment, etc.) and/or a television, for example. In one embodiment, the exemplary computing system **100** includes a central processing unit ("CPU") **105**, which may include one or more conventional or proprietary microprocessor. The computing system **100** further includes a memory **108**, such as one or more random access memories ("RAM") for temporary storage of information, a read only memory ("ROM") for permanent storage of information, and a mass storage device **102**, such as a hard drive, diskette, flash memory drive, or optical media storage device. The modules of the computing system **100** may be connected using a standard based bus system. In different embodiments, the standard based bus system could be Peripheral Component Interconnect ("PCI"), PCI Express, Accelerated Graphics Port ("ACP"), Microchannel, Small Computer System Interface ("SCSI"), Industrial Standard Architecture ("ISA") and Extended ISA ("EISA") architectures, for example. In addition, the functionality provided for in the components and modules of computing system **100** may be combined into fewer components and modules or further separated into additional components and modules.

[0046] The computing system **100** is generally controlled and coordinated by operating system software, such as Windows 95, Windows 98, Windows NT, Windows 2000, Windows XP, Windows Vista, Windows 7, Windows Mobile, Unix, Linux (including any of the various variants thereof), SunOS, Solaris, mobile phone operating systems, or other compatible operating systems. In Macintosh systems, the operating system may be any available operating system, such as MAC OS X or iPhone OS. In other embodiments, the computing system **100** may be controlled by a proprietary operating system. Conventional operating systems control and schedule computer processes for execution, perform memory management, provide file system, networking, I/O services, and provide a user interface, such as a graphical user interface ("GUI"), among other things.

[0047] The exemplary computing system **100** includes one or more input/output (I/O) devices and interfaces **110**, such as a keyboard, trackball, mouse, drawing tablet, joystick, game controller, touchscreen (e.g., capacitive or resistive touchscreen) touchpad, accelerometer, and printer, for example. The computing system also includes a display device **104** (also referred to herein as a display screen), which may also be one of the I/O device **110** in the case of a touchscreen, for example. In other embodiments, the display device **104** may include an LCD, OLED, or other thin screen display surface, a monitor, television, projector, or any other device that visual depicts user interfaces and data to viewers. The display device **104** provides for the presentation of GUIs, application software data, and multimedia presentations, for example. The computing system **100** may also include one or more multimedia devices, such as speakers, video cards, graphics accelerators, and microphones, for example.

[0048] In the embodiment of FIG. **1**, the I/O devices and interfaces **110** may provide a communication interface to various external devices. For example, the computing system **100** may be electronically coupled to a network, such as one or more of a LAN, WAN, or the Internet, for example, via a wired, wireless, or combination of wired and wireless, communication link(s). Such a network may allow communica-

tion with various other computing devices and/or other electronic devices via wired or wireless communication links.

[0049] In the embodiment of FIG. **1**, the computing system **100** also includes a user interface module **106** that may be executed by the CPU **105**. This module may include, by way of example, components, such as software components, object-oriented software components, class components and task components, processes, functions, attributes, procedures, subroutines, segments of program code, drivers, firmware, microcode, circuitry, data, databases, data structures, tables, arrays, and variables. In the embodiment shown in FIG. **1**, the computing system **100** is configured to execute the user interface module **106**, among others, in order to provide user interfaces to the user, such as via the display device **104**, and monitor input from the user, such as via a touchscreen sensor of the display device **104** and/or one or more I/O devices **110**, in order to navigate through various menus of a software application menu, for example.

[0050] In general, the word "module," as used herein, refers to logic embodied in hardware or firmware, or to a collection of software instructions, possibly having entry and exit points, written in a programming language, such as, for example, Java, Javascript, ActionScript, Visual Basic, Lua, C, C++, or C#. A software module may be compiled and linked into an executable program, installed in a dynamic link library, or may be written in an interpreted programming language such as, for example, BASIC, Perl, or Python. It will be appreciated that software modules may be callable from other modules or from themselves, and/or may be invoked in response to detected events or interrupts. Software instructions may be embedded in firmware, such as an EPROM. It will be further appreciated that hardware modules may be comprised of connected logic units, such as gates and flip-flops, and/or may be comprised of programmable units, such as programmable gate arrays or processors. The modules described herein are preferably implemented as software modules, but may be represented in hardware or firmware. Generally, the modules described herein refer to logical modules that may be combined with other modules or divided into sub-modules despite their physical organization or storage.

[0051] In other embodiments, the computing system may include fewer or additional components than are illustrated in FIG. **1***a*. For example, a mobile computing device may not include a mass storage device **102** and the display device **104** may also be the I/O device **110** (e.g., a capacitive touchscreen). In some embodiments, two or more of the components of the computing system **100** may be implement in one or more field programmable gate array (FPGA) or application specific integrated circuit (ASIC), for example.

Examples of Systems and Methods

[0052] In FIG. **1***b*, view **120** illustrates a mouse **130** comprising a right button **132**. In view **120**, a user depresses right mouse button **132** of mouse **130**, with depression of the right mouse button illustrated with arrow **134**. In one embodiment, depressing the right mouse button **132** initiates display of a graphical menu **140** on the display screen centered around initial cursor position **125** on the display device. In other embodiments, other operations may be performed on the mouse **120** (or other input device) in order to initiate display of the graphical menu **140**. In the embodiment of FIG. **1***b*, the graphical menu **140** comprises one or more icons (in this example, eight octagonal icons labeled **141-148**). Graphical menus and their component icons can vary in appearance and functionality, as will be described below.

[0053] The example graphical menu **140** may be displayed on top of whatever else might be displayed on the display screen, with some portions of the graphical menu transparent in some embodiments. In the example of FIG. **1***b*, the graphical menu **140** is displayed so that it is centered around the initial cursor position **125**.

[0054] For the purposes of the series of events illustrated in FIG. **1***b*, FIG. **1***c*, and FIG. **1***d*, it is assumed that by default, display of the graphical menu **140** is centered on initial cursor position **125** (e.g., the cursor position when the user initiated displayed of the graphical menu, such as by right clicking the mouse **130**).

[0055] FIG. **1***c* illustrates in view **122** a mouse movement that could be used to temporality select the icon **142** (FIG. **1***b*), such that the icon **142***a* (FIG. **1***c*) is temporarily selected. As illustrated in view **122**, the user continues action **134** of depressing the right mouse button **132** and, in this example, moves the mouse **130** superiorly and to the right, along the path depicted by arrow **136**. This movement of the mouse causes cursor **170** to move superiorly and to the right on the display device on which the graphical menu **140** is displayed. Thus, FIG. **1***c* illustrates cursor **170** moved from the initial cursor position **125** towards icon **142***a*.

[0056] As the cursor **170** approaches a portion of the graphical menu, an icon within the graphical menu is temporarily chosen and displayed in such a way as to visually distinguish it from unselected icons within the graphical menu. Thus, the graphical menu **140** shows the temporarily selected icon **142***a* displayed in a way that differentiates it from its original appearance as icon **142** (FIG. **1***b*). In the example of FIGS. **1***b* and **1***c*, icon **142** in FIG. **1***b* has changed to icon **142***a* in FIG. **1***c* by changing background and font colors of the icon **142**, in order to indicate that icon **142** has been temporarily selected. There are many ways that an icon could change to depict that it is temporarily selected and differentiate it from icons that are not chosen. For example, an icon may become animated when temporarily selected, may display a modified or different image or text, or may be transformed in any other manner.

[0057] As noted above, in this exemplary embodiment the user is not required to position the cursor **170** directly over an icon in order to select that icon. As will be discussed in more detail below, only minimal movement toward an icon may be required to select it, increasing efficiency and decreasing necessary mouse movement and the potential for repetitive motion injury.

[0058] FIG. **1***d* demonstrates how the user indicates that the temporarily selected icon **142***a* (FIG. **1***c*) is permanently selected, which represents a final choice for this interaction with the graphical menu and the graphical menu is no longer displayed. As illustrated in view **124**, the user releases mouse button **132** such that the button moves in a direction depicted by arrow **138** (e.g., releasing the right button **132**). Thus, in the embodiment of FIGS. **1***b*, **1***c*, and **1***d*, an icon is temporarily selected by depressing the right button **132** in order to initiate display of the graphical menu, moving the cursor **170** towards (and/or partially or fully over) a desired icon in order to temporarily select the icon, and releasing the right button **132** to permanently select the desired icon in order to initiate execution of an operation associated with the selected icon.

[0059] In the embodiment illustrated in FIG. **1***b*, graphical menu **140** is displayed symmetrically around initial cursor

position **125**. However, in another embodiment where there is a default icon choice, for example, the graphical menu could be asymmetrically positioned around the initial cursor position such that an icon is chosen by default. In one embodiment, the graphical menu **140** may be positioned such that a default icon is closer to the initial cursor position when the graphical menu **140** is initially displayed. With reference to FIG. **1***c*, for example, if the initial cursor position is the position of cursor **170** shown in FIG. **1***c*, rather than position **125** indicated in the figure, the menu **140** may be initially displayed so that icon **142***a* is temporarily selected as a default. Depending on the embodiment, any of the icons in the graphical menu may be chosen by default, such as in response to options established by a user or based on frequency of use of respective icons, for example.

[0060] FIG. **1***e* illustrates how icons within a graphical menu, and display of a second graphical menu, can be selected in response to movements of a cursor. There is no limit to the number of choices that can be presented to the user using the graphical menus discussed herein. For example, the permanent selection of an icon in one graphical menu could initiate display of another graphical menu, as will be discussed in further detail with reference to FIG. **1***e*. This could be repeated so that selection of an icon in a second graphical menu could open a third graphical menu, and the process may be repeated ad infinitum to present further graphical menus. One of the selections in a graphical menu could be to return to a previous graphical menu.

[0061] In FIG. **1***e*, screen regions **160**, **162**, **164** and **166** represent the same physical screen region but at different stages in the navigation of a primary graphical menu (stages **160**, **162**) and a secondary graphical menu (stages **164**, **166**). Region **161** is a magnification of central region **169** of screen region **160**, with its approximate size and location illustrated by a dashed rectangle **169** within region **160**. Magnified central regions **163**, **165**, and **167** of screen regions **162**, **164**, and **166**, respectively, are also shown, with the corresponding magnified regions having the same relationship as region **161** to screen region **160**.

[0062] In FIG. **1***e*, screen region **160** shows display of graphical menu **140** including icons labeled A-H that are arranged in an icon region surrounding the initial cursor position of cursor **170**, depicted in both the dashed rectangle **169** and the magnified region **161** that represents the content of the same dashed rectangle **169**. In one embodiment, display of the graphical menu **140** was initiated by user actions.

[0063] In screen region **162**, the user has moved the cursor **170** superiorly and to the right along path **172**, depicted in magnified region **163**. In this embodiment, movement of cursor **170** toward icon **152** has caused icon **152** to be temporarily selected and its appearance has changed so that it can be visually differentiated from unselected icons, such as icons **141** and **143**. As illustrated, icon **152** is temporarily selected before the cursor reaches the icon **152**. In other embodiments, temporary selection of an icon may not occur until at least a predetermined portion of the cursor covers an icon. Various criteria for determining when icons are temporarily and/or permanently selected are discussed below.

[0064] In the example shown in FIG. **1***e*, permanent selection of icon **152**, such as by releasing the right mouse button when icon **152** is temporarily selected, for example, results in display of a new graphical menu **180**. Depending on the embodiment, the display of graphical menu **180** shown in screen region **164** could be configured to occur in the following example circumstances: (1) Display of the second graphical menu **180** could occur as soon as the icon **152** (or other icon associated with display of the graphical menu **180**) in the first graphical menu **150** is temporarily selected, (2) display of the second graphical menu **180** could occur after the icon **152** is permanently selected, such as by releasing the right mouse button or with one of the other techniques describe herein, or (3) display of the graphical menu **180** could occur after a time delay. This would allow the user to reposition the cursor **170** if an undesired icon is temporarily selected (e.g., rather than immediately replacing graphical menu **150** with graphical menu **180** when the undesired icon is temporarily selected). A selected time delay, such as 100 milliseconds, for example, could be set such that permanent selection of an icon, and display of a second menu in this example, would occur after an icon is temporarily selected for at least 100 milliseconds.

[0065] The screen region **164** depicts display of the secondary graphical menu **180** and removal of graphical menu **150**, such as in response to one of the above-indicated interactions with icon **152**. In this embodiment, the secondary graphical menu **180** is centered around a new initial cursor position, the position of the cursor in screen region **162** at the time that icon **152** was permanently selected. As discussed elsewhere herein, graphical menus can vary in their appearance and graphical menu **180** happens to have 4 square icons. Screen region **165** depicts a magnification of screen region **164**, as described above.

[0066] Screen regions **166** and **167** illustrate what happens when the user moves the cursor inferiorly from the position illustrated in screen regions **164** and **165** along the path illustrated by arrow **174**. Cursor movement inferiorly has caused the temporary selection of an icon **187** within graphical menu **186**. Graphical menu **186** is the same as graphical menu **180** except that an icon has been temporarily selected. Specifically, graphical menu **186** has a temporarily selected icon **187** displayed in a way that differentiates it from unselected icons such as **182** and **183**.

Implementation on Cell Phones, PDAs, Tablet PCs

[0067] Some computing systems with displays do not utilize a mouse for navigation and the user interfaces described herein can be implemented with other forms of navigation. For example, FIGS. **2***a* and **2***b* illustrate the implementation of an enhanced user interface using a stylus, but other navigation devices could be utilized, such as a finger controlled touch screen or directional navigation buttons, for example. In the description below, the device in FIG. **2***a* and FIG. **2***b* will be referred to as a cell phone, but it could be a PDA, tablet PC, or other device with a display screen **212**. While the pointing device illustrated is a stylus **214**, it could alternatively be the user's finger or other object.

[0068] In FIG. **2***a*, the user initiates an action that causes display of graphical menu **230**. In this implementation, display of the graphical menu **230** is initiated by detection of a particular motion path **220** on the input screen **212**. In this embodiment, motion path **220** comprises roughly the path that the user would use to draw the number "6" using the stylus **214**. The user interface software that executes on the cell phone **210** could be configured to display other graphical display menus for other input tracings. For example, the interface software could be configured to display a different graphical menu in response to the user tracing a path similar

to the letter "L" or any other pattern. Display of graphical menus could be initiated in many other ways, as will be described herein.

[0069] In this example, graphical menu **230** has eight hexagonal icons and is displayed centered about where the input pattern was completed on the display screen. Thus, in the embodiment of FIG. **2***a*, the initial cursor position is a terminal position of tracing **220**. In other embodiments, the graphical menu **230** may be centered elsewhere, such as a start position of the tracing **220** or some intermediate position of the tracing **220**, for example. Icon **237** is one of the eight icons within graphical menu **230**.

[0070] The user can temporarily select an icon within the graphical menu **230** by moving the stylus **214** toward the desired icon. FIG. **2***b* shows an example where the user has moved the stylus **214** towards the left along path **222**. This movement causes temporary selection of the closest icon, in this case the icon **237**, which changes appearance in FIG. **2***b* in response to being temporarily selected, in order to allow it to be visually differentiated from the other unselected icons in the graphical menu **240**, for example unselected icon **246**.

[0071] FIG. **2***c* illustrates the use of a graphical menu **270** on another handheld device **260** that has the ability to monitor its position (e.g., orientation) or movement. The device **260** is a handheld device such as a cell phone (e.g., iPhone), PDA, tablet PC, portable music or media player, gaming device or other handheld device with a display screen. In another embodiment, device **260** could be an input device, such as a Wii controller or 3D mouse, where the screen is on another device.

[0072] In order to use this graphical menu system in the way that will be described in FIG. **2***c*, device **260** includes technology that allows it to sense its position and/or motion, such as one or more accelerometers. Device **260** has display screen **270** and may have one or more input devices **264** and **265**, that could include buttons or other input devices. Device **260** is depicted in view **250** in an arbitrary orientation (e.g., position held by the user). As will be described, its position will be changed by the user in views **252** and **254** in order to indicate selection of icons.

[0073] In view **250** of FIG. **2***c*, graphical menu **270** is displayed on screen **262** and includes icons **271-274**. The user initiated some action to cause the graphical menu to be displayed, for example one of the other techniques described herein. Additional ways the user could initiate display of graphical menu **270** include the pressing of a button, for example button **264**, voice or other audible commands, touching the screen with two fingers in a predetermined pattern and/or location, or some positioning of device **260**, such as shaking it side to side.

[0074] In view **252** of FIG. **2***c*, x, y, and z axes are illustrated to indicate repositioning of the device by the user. The x axis and y axis are in the plane of screen **262** of device **260**, along its short and long axis respectively, and the z axis is perpendicular to the screen. Motion path **285** illustrates that the user is physically rotating the device toward his left along the y axis. Device **260** detects movement of the device **260** along motion path **285** and temporarily selects the icon within the graphical menu that is positioned in the detected direction from the point of view of the center of the graphical menu. In this case, because the motion path **285** comprises rotation of the device **260** towards the left, the left icon **274** of the graphical menu **270** is temporarily selected. Once temporarily selected, one or more characteristics of icon **274** are changed (as shown by the dark background of icon **274** in view **252**) in order to allow it to be visually differentiated from the remaining unselected icons.

[0075] In view **254** of FIG. **2***c*, x, y, and z axes are again illustrated as in view **252**. As illustrated by motion path **286**, the user is rotating the device downward (toward him, rotating about the x axis). In response to this movement, the computing device temporarily selects the icon **273** at the bottom of the graphical menu **270**. In this case, selected icon **273** is illustrated in a way to differentiate it from the remaining unselected icons. While views **252** and **254** illustrate rotation around specific axes, the user may rotate the device in any arbitrary direction to allow temporary selection of an icon at any position on the screen.

[0076] In one embodiment, an icon that is temporarily selected may be permanently selected without further user interaction (e.g., there really is no temporary selection, by maintaining the device **260** in an orientation to temporarily select an icon for a predetermined time period), by pressing a button, such as one of buttons **264**, **265**, or by any other input that may be provided by the user of the device **260**.

[0077] In the example depicted in FIG. **2***c*, detection of "pouring" motions (e.g., motion **252** shows the device being tilted as if the user is pouring into icon **274**) can be facilitated by tilt sensor(s) and/or accelerometer(s). In certain embodiments, sufficient number of such detection components can be provided so as to allow motion-based temporary selection and/or permanent selection of icons having both x and y components. For example, suppose than a fifth icon is provided between icons A and B (in first quadrant of the x-y plane). Then, a tilting motion towards such an icon can be detected by sensing a combination of motions about y and x axes (motions opposite to **285** and **286**).

[0078] There are a number of other motion-based user inputs that can be implemented to achieve similar results. For example, a device can be jerked slightly towards an icon that the user wants to temporarily (or permanently) select. For such motions, one or more accelerometers can be provided and configured to detect two-dimensional motion along a plane such as a plane substantially parallel to the device screen.

Methods for Determining Icon Selection

[0079] There are many possible methods for determining if a user has selected an icon within a graphical menu. Several will be described herein, but others are contemplated that would provide the same or similar functionality.

[0080] FIG. **3** is a diagram illustrating screen regions **320-328** of a graphical menu **150**, where movement of a cursor **303** onto certain screen regions may be used to determine which icon within the graphical menu has been selected (or temporarily selected) by the user. Using such a mapping scheme, an icon within the graphical menu may be selected when the user positions the cursor **303** within a screen region corresponding to an icon.

[0081] In this example, graphical menu **150** depicts eight icons, **141**, **152**, **143**, **144**, **145**, **146**, **147**, and **148**. The screen is divided into multiple regions **320-328**, with regions **321-328** corresponding to respective icons and region **320** centered on the initial cursor position, around which the graphical menu is displayed. In this embodiment, each of the regions **321-328** includes at least a portion of its respective icon. In this example, region **320** is centered about the initial cursor position at the time the graphical menu was displayed. In the

example shown, region **321** corresponds to icon **141**, region **322** to icon **152**, region **323** to icon **143**, region **324** to icon **144**, region **325** to icon **145**, region **326** to icon **146**, region **327** to icon **147**, and region **328** to icon **148**.

[0082] Determining whether the cursor falls within a region is straightforward in this example as the regions are bounded by horizontal lines **331** and **333** and vertical lines **335** and **337** which may be represented by x and y coordinates in a computer system. For the purposes of illustration, lines **335**, **337**, **331** and **333** are labeled with "x**1**", "x**2**", "y**1**", and "y**2**", respectively, in order to indicate their positions in the coordinate system of screen **310** as follows:

[0083] Vertical line **335** is at position x**1**.

[0084] Vertical line **337** is at position x**2**.

[0085] Horizontal line **331** is at position y**1**.

[0086] Horizontal line **333** is at position y**2**.

[0087] In this embodiment, if the position of cursor **303** at any given time is represent by coordinates (x,y), determining the region that the cursor is positioned can be accomplished as follows:

[0088] If $x>x1$ and $x<x2$ and $y\geqq y2$ then in region **321**.

[0089] If $x>x1$ and $x<x2$ and $y>y1$ and $y<y2$ then in region **320**.

[0090] If $x>x1$ and $x<x2$ and $y\leqq y1$ then in region **325**.

[0091] If $x\geqq x2$ and $y\geqq y2$ then in region **322**.

[0092] If $x\geqq x2$ and $y>y1$ and $y<y2$ then in region **323**.

[0093] If $x\geqq x2$ and $y\leqq y1$ then in region **324**.

[0094] If $x\leqq x1$ and $y\geqq y2$ then in region **328**.

[0095] If $x\leqq x1$ and $y>y1$ and $y<y2$ then in region **327**.

[0096] If $x\leqq x1$ and $y\leqq y1$ then in region **326**.

[0097] FIG. **4***a* is a diagram illustrating another embodiment of a graphical menu including screen regions that may be used to determine which icon within a graphical menu has been selected by the user. In this embodiment, screen **402** includes a graphical menu having 8 hexagonal icons. Position **404** indicates the initial cursor position when the graphical menu was rendered at its current position on the screen.

[0098] In this example, the screen **402** is divided into radial regions **421**-**428** and a central home region **420** centered in the graphical menu. In this embodiment, radial regions **421**-**428** each correspond to a respective icon in the graphical menu. For example, region **421** corresponds to icon **431**, region **422** corresponds to icon **432**, and region **423** corresponds to icon **433**.

[0099] When cursor **410** is positioned within home region **420**, no icon is selected. When the user moves the cursor out of home region **420** and into another region, the icon within that region is temporarily selected. In this case, cursor **410** has been moved by the user into region **422**. This has caused temporary selection of the corresponding icon **432** which is displayed in such a way as to differentiate it from the unselected icons within the graphical menu. In this example the temporarily selected icon is displayed as darker and the letter inside it displayed with a different font and color, but there are many other ways that a temporarily selected icon could be visually distinguished from unselected icons.

[0100] FIG. **4***b* is a diagram illustrating another embodiment of a user interface including screen regions **461**-**468** that may be used to determine which icon within a graphical menu has been selected by the user, where the user interface includes asymmetric icons and asymmetric screen regions used for detection of icon selection. In the embodiment of FIG. **4***b*, the graphical menu comprises eight icons within screen region **440**. This example demonstrates that unselected icons within a graphical menu may differ in appearance, including features such as size and shape. In addition, the size and/or shape of the screen regions associated with each icon in a graphical menu may differ.

[0101] The screen regions associated with each icon can differ in size and shape. This may be advantageous in cases where some icons are more commonly chosen than other. More commonly selected icons might be assigned larger associated screen regions to make it easier for the user to select those areas and therefore the respective icon. While the relative size of the various screen regions could vary independently of the size of the icons in the function menu, in this example icons **473** and **477** are larger than the other icons in the graphical menu, and their associated screen regions **463** and **467** are also larger than the other screen regions.

[0102] As in a previous example, home region **460** is centered where the cursor was positioned at the time the graphical menu was displayed. When cursor **170** is positioned within the home region, no icon is selected. In other embodiments, however, a default icon may be temporarily selected even when the cursor **170** is initially positioned within the home region **460**.

[0103] The remainder of screen region **440** is divided into eight regions, one each corresponding to the icons within the graphical menu, with screen regions **461**-**468** depicted using underlined text in the figure. For example, region **461** is associated with unselected icon **471**, region **462** with unselected icon **472**, region **463** with selected icon **473**, and region **467** with unselected icon **477**.

[0104] In this example, the user has positioned cursor **170** in region **463**, causing temporary selection of icon **473**. In this example, icon **473** had an appearance similar to **477** when it was unselected, but upon temporary selection of the icon **473**, the icon **473** changed its appearance to allow it to be differentiated from the unselected ions. Temporarily selected icon **473** is darker than the unselected icons and the letter within it has a different font, larger, bold, and white instead of black color.

[0105] FIG. **5***a* is a diagram illustrating another embodiment of a graphical menu. In this embodiment, instead of dividing the screen into regions, this technique uses distance between the cursor and icons to determine whether and which icon is selected.

[0106] For the purposes of describing this technique, the initial cursor position **504** is the screen position at which the graphical menu was initially displayed.

[0107] In the technique depicted in FIG. **5***a*, each icon is associated with a single position (icon location point). In the example shown, graphical menu **150** has eight hexagonal icons, including icons **141**, **152**, and **143**. In this example, each icon's location point is at the icon center. However, an icon's location point could be assigned to any position within the icon or even outside of the icon. In the example shown, the icon location point for icon **143** is at position **514**.

[0108] The location of user controlled cursor **510** is screen position **507** in the figure. In the figure, the distance between each icon's location point and the cursor position **507** is depicted by a dashed line. For example, dashed line **516**, which would be invisible to the user of the graphical menu, represents the distance between cursor position **507** and icon location point **514** of icon **143**.

[0109] Determining whether an icon has been selected and if so, which one, can be accomplished by using the distances between the cursor position and icon location points. Deter-

mining whether any icon has been selected can be determined in a number of ways. Two non-limiting examples are described below.

[0110] With one technique, the distance between the cursor position **507** and initial cursor position **504** is determined, depicted in the figure as dashed line **512**. This distance is compared to a threshold distance, wherein when the distance is above the threshold distance (e.g., the cursor is close enough to an icon), an icon is temporarily selected. Thus, once it is determined that the cursor is positioned such that an icon should be temporarily selected, the computing system determines which of the icons is the selected icon. In one embodiment, a particular icon is identified for temporary selection by assessing the distances between the cursor location **507** and icon location points, and then selecting the icon with the smallest cursor to icon location point distance. It is possible that two or more icons might have equal cursor to icon location point distances. This situation may be resolved in several ways, such as (1) no icon would be selected until the user repositions the cursor so that the choice is unique, (2) icons could be assigned priorities so that the highest priority icon is chosen in the case of distance ties, or (3) an icon is randomly chosen from among this group, for example.

[0111] In the example shown, distance **518** is the smallest cursor position to icon location distance, causing icon **152** to be temporarily selected. Note that appearance of selected icon **152** differs from the other unselected icons in graphical menu **150**.

[0112] In another embodiment, rather that performing the step of first determining whether an icon is selected, such as based on a distance between the cursor and an initial cursor position, and then determine which specific icon has been selected, the computing device may repeatedly recalculate distances between the cursor position **507** and one or more icon locations until one of the distances falls below a threshold.

[0113] FIG. **5***b* and FIG. **5***c* illustrate another technique in which distance is used to determine whether an icon is temporarily or permanently selected and, if so, which one. The technique illustrated in FIG. **5***a* utilizes a single icon location point of each icon. However, multiple icon location points can be utilized for icons.

[0114] FIG. **5***b* illustrates icon **530** with multiple icon location points **531-535** positioned at its vertices. However, icon location points can be assigned at any positions within an icon, along its edge or outside of it.

[0115] FIG. **5***c* illustrates a graphical menu **540** having four icons, **541-544**. As in FIG. **5***b*, each of these icons has 5 icon location points, one at each of its vertices. The position **507** of cursor **510** is illustrated in the figure. Dashed line **548** depicts the distance between cursor position **507** and one of the icon location positions, **535** of icon **543**. The figure illustrates dashed lines between cursor position **507** and several of the other icon location points of the icons in the graphical menu. In practice, the distance from the cursor location to every icon location point may be determined.

[0116] The process of determining whether and which icon would be selected with multiple icon locations per icon may be similar to that used with a single icon location per icon. In the case of multiple icons locations per icon, the cursor to icon location distance for each icon is the minimum distance of its icon location points to the cursor location.

Flowcharts

[0117] FIG. **6***a* is a flowchart **600** illustrating one embodiment of a method that could be used for display and interaction of a user with a graphical menu. As discussed above with FIG. **1***e*, graphical menus can be cascaded, as discussed in reference to the flowchart in FIG. **6***b*. There is no limit to the number of levels that could be implemented in such a cascade or tree of graphical menus. The method of FIG. **6***a* may be performed on any suitable computing device, such as one of the computing devices discussed above with reference to FIG. **1***a*. Depending on the embodiment, the method of FIGS. **6***a* and **6***b* may include fewer or additional blocks and the blocks may be performed in a different order than is illustrated.

[0118] In flowchart **600**, a graphical menu module that is configured to display graphical menus is first initiated in block **610**. The graphical menu module may include software code that is executed by a computing device, such as a mobile or desktop computing device. The graphical menu module is configured to cause the computing device to display the graphical menu and detect interactions of the user (e.g., a cursor controlled by the user or a stylus or finger touching the display screen). In one embodiment, the graphical menu module comprises a standalone software application that interfaces with other software applications on a computing device. Alternatively, the graphical menu module may be incorporated into another software application, such as a word processor, graphic application, image viewing application, or any other software application. Alternatively, the graphical menu module could be part of the operating system. Depending on the embodiment, the initiation of the graphical menu module might occur as a result of a user's action, for example depression of the right mouse button, or could occur automatically as a result a program or the operating system initiating the system to obtain user input. In response to initiation of the graphical menu module, a graphical menu is provided via a display device, such as a monitor or screen of a mobile computing device.

[0119] In block **612**, the graphical menu module determines whether the user has finished using the displayed graphical menu. For example, by releasing the right mouse button (possibly indicating a desire to permanently select a temporarily selected icon and initiate execution of a process associated with the icon), the user may indicate that he has finished with the current instance of the graphical menu system. Alternatively, a user may indicate that he is finished with a graphical menu by moving a cursor off of the graphical menu, such as outside an area of the screen where the graphical menu is displayed. In one embodiment, certain graphical menus may "time out," so that if no user input is received for a predetermined time period, the user is considered to be finished with the graphical menu and the method continues to block **620**.

[0120] If the user is not finished using the displayed graphical menu, in block **614** the system determines whether an icon is temporarily selected using, for example, one of the techniques described herein.

[0121] If no icon has been temporarily selected, in block **616** the graphical menu is displayed with no icon selected (e.g., shaded or otherwise distinguished from other icons) in block **616**. The method then loops back to block **612** and again senses whether the user is finished with the graphical menu.

[0122] If an icon has been temporarily selected, in block **618** the graphical menu is displayed with the selected icon displayed in a way that differentiates it from the unselected

icons, as described herein. The method then loops back to block **612** and again senses whether the user is finished with the graphical menu.

[0123] If the graphical menu module determines that that the user is finished in block **612**, the method branches to block **620** and determines whether an icon was permanently selected. If an icon is determined to have been permanently selected, the method branches to block **622** where the graphical menu module returns the identity of the permanently selected icon to the program or operating system that the graphical menu module is configured to interact with. In another embodiment, permanent selection of an icon initiates display of a secondary menu comprising a plurality of icons about the current cursor position. Thus, blocks **612-624** may be repeated with respect to the secondary menu in order to determine if an icon of the second memory is selected. The process may be repeated any number of times in relation to any number of different menus that may be navigated to via other graphical menus.

[0124] At block **620** if no icon has been permanently selected, the method branches to block **624** where the graphical menu module returns an indication that no icon of the graphical menu was permanently selected to the program or operating system that the graphical menu module is configured to interact with.

[0125] FIG. **6***b* is a flowchart **602** with logic similar to FIG. **6***a*, except for blocks **630** and **632**. In the case that no icon was selected, a secondary menu is displayed in block **630**. The user can pick from this secondary menu in block **632**. This secondary menu could be a graphical menu, as described herein, or could be a conventional menu, as illustrated in FIG. **7***c*.

[0126] FIG. **7***a* illustrates a graphical menu superimposed on a homogenous screen. In this embodiment, the graphical menu **710** comprises eight square icons, **711-718**. Cursor **720** is positioned near icon **711** causing icon **711** to be selected, using one of the techniques described herein. The selected icon **711** appears color inverted with respect to the other unselected icons in the graphical menu, allowing the user to easily differentiate the selected icon from unselected icons.

[0127] FIG. **7***b* illustrates a graphical menu superimposed on a complex screen output of a program that called the graphical menu. In particular, the graphical menu is superimposed on the contents of the screen **709**, in this case a gray scale image. In addition, the cursor is superimposed on top of both the graphical menu and the underlying image on the screen. In this example, the cursor position is near the initial cursor position and no icon within the graphical menu is selected. In one embodiment, the graphical menu may have some transparency, as illustrated in this figure. In one embodiment, a level of transparency can be selected by the user.

[0128] FIG. **7***c* illustrates user interactions with the graphical menu illustrated in FIG. **7***a* or FIG. **7***b*. A screen region **730** on which the graphical menu is superimposed is similar to screen regions **708** and **709** in FIG. **7***a* and FIG. **7***b*, respectively. For clarity, the various components of screen region **730** are not annotated as they are analogous to those illustrated in FIG. **7***a* and FIG. **7***b*. Screen region **730** illustrates a graphical menu having eight unselected icons superimposed on a screen region that in this case is a grayscale image. The cursor is displayed as well, as previously. In this case the cursor is positioned in a region within the graphical menu and no icon within the graphical menu has yet been temporarily selected.

[0129] View **731**, which is associated with screen region **730**, illustrates mouse activity that could have been used to initiate display of the graphical menu within screen region **730**. Exemplary mouse **725** includes one or more buttons. In this example, depression of the right mouse button **726** causes display of the graphical menu. Depression of button **726** is illustrated by arrow **732**.

[0130] View **741** is similar to view **731**. While continuing to depress the right mouse button, illustrated by arrow **732**, the user moves the mouse to the right, illustrated by motion path **742**. This causes rightward motion of the cursor, repositioning it from its position in screen view **730** to that in screen view **740**. This causes selection of an icon, as described previously. In comparing the graphical menu in screen view **740** to that in screen view **730**, it can be seen that an icon has changed its appearance, indicating to the user that it has been temporarily selected.

[0131] View **751** is similar to view **741** but illustrates further mouse movement. In view **751**, the user moves mouse **725** superiorly, illustrated by mouse path **752**. As in the example illustrated in **740** and **741**, this results in repositioning of the cursor and selection of a different icon within the graphical menu.

[0132] View **761** illustrates the case where there is little or no cursor repositioning compared to the original position of the cursor in view **730**. In this case, net movement of the mouse is insufficient for an icon to be selected within the graphical menu, as discussed previously. In this example, release of mouse button **726**, illustrated by arrow **762**, results in the display of a different menu from which the user can choose. Thus, the user may be presented with a first graphical menu in response to a first action (e.g., depressing the mouse button) and may be presented with a second menu in response to a second action that follows the first action (e.g., releasing the mouse button without temporarily selecting an icon).

Other Contemplated Embodiments

[0133] For some of the embodiments illustrated herein, the user input device is a mouse. However, any input device or combination of input devices could be used to control the graphical menus described herein, including: mouse, trackball, keyboard, touch screen, 3d mice, foot controls, pointing sticks, touchpad, graphics tablet, joystick, brain-computer interfaces, eye-tracking systems, Wii remote, jog dial, and/or steering wheel.

[0134] A graphical menu module could be implemented in many situations. For example, a graphical menu module can be implemented within a computer program where the user might use it to choose among options. For example, in a word processing program it might be used to allow the user to choose font options, such as bold, italic, and underline. In a PACS system it might be used to allow users to choose various predefined display settings for an image.

[0135] In another example, a graphical menu module can be implemented within a computer program to allow selection of various operations. For example, in a word processing program it could be used to choose among operations like copy, paste, delete, and indent. In a PACS system it could be used to choose among different operations such as window/level, choose series, region of interest, zoom, pan, and others.

[0136] In another example, a graphical menu module can be implemented within an operating system where it could be

used to choose among operations like "launch web browser," "launch word processing program," "launch spreadsheet program," and so on.

[0137] In another example, a graphical menu module can be implemented as an add-in program or standalone driver, such as a mouse driver, that would allow the use of the system in cases where it had not been directly implemented within a program or operating system. The system may be configured to send key strokes or other inputs to the program or operating system for which it was configured.

[0138] The appearance and operation of graphical menus used in the system could vary in many ways. For example, the graphical menu, the icons it includes, and how it operates could vary depending on the context in which it was launched. Graphical menus could differ depending on the program or operating system that utilized the system. In addition they could be configurable by the user. In another example, graphical menus could contain one or more icons. In another example, icons within graphical menus could take many forms, including a computer graphic, a picture, and/or text. In another example, icons within a graphical menu could vary in appearance and size. In another example, different methods could be used to allow a user to visually differentiate selected from unselected icons within a graphical menu. For example, the icons could be differentiated by icon appearance, size, color, brightness, features of text font (such as size, bold, italics), and/or motion or blinking (e.g., the selected icon could blink or shake back and forth on the display).

[0139] While depression of the right button of a mouse is used in several examples to initiate display of a graphical menu, many other ways are contemplated to initiate display of a graphical menu. For example, such initiation can be via a key on a keyboard, a button on any input device (with example input devices listed herein), a mouse gesture, a gesture on a touch screen with a finger or stylus, physical motion of the device (for example, shaking a handheld device), a result of picking an icon on another graphical menu, and/or a result of a computer or system operation, rather than the result of the user initiating the action. For example, a computer program or operating system might require the user to provide input and in that case display a graphical menu. In another example, a computer with a battery that is running low might display a graphical menu allowing the user to choose among: continue working, shut down, save all open documents, and initiate hibernation.

[0140] After an icon is temporarily selected within a graphical menu, several examples herein illustrate the user permanently selecting that icon by releasing the right mouse button. However, they are many ways that a user could permanently select an icon from a graphical menu, including: removing a stylus or finger from a touch screen, pressing a button or key, a mouse gesture, sound input, cursor movement (for example, slight movement from the initial cursor position toward an icon might result in it being temporarily selected; and further movement toward the icon might result in the icon being permanently selected and termination of display of the graphical menu), time (the system could be configured such that a temporarily selected icon would be permanently selected after it was temporarily selected for a predetermined time duration, say for example 100 milliseconds), and/or if the user positioned the cursor over the icon or a predetermined portion of the icon.

Sound

[0141] Sound could be used in several ways with this technique to supplement the use of a graphical menu or substitute for the display of a graphical menu. For example, when any icon is temporarily selected, a sound could be played, for example a beep.

[0142] In another example, when no icon is temporality selected (e.g., when the user moves the cursor back toward its initial cursor position after temporarily selecting an icon), a sound could be played. This could be different than the sound played when an icon is selected (e.g., temporary selection of an icon could cause a single beep, and subsequent cursor movement that resulted in no icon selected could result in a double beep).

[0143] In another example, different sounds could be played for different icons, even spoken words. This could allow the user to accurately verify selection of an icon without the need for visual verification. For example, a graphical menu within a word processing program might have four choices: "cut", "copy", "paste", and "look up". As the user repositions the cursor, these options could be spoken. If one of these was chosen and the user repositioned to another, the sound associated with the new choice would be spoken. If he repositioned the cursor so that none were chosen, a different phase could be spoken, such as "no selection".

[0144] In another example, a system using sound could be constructed in which visual display of the graphical menu was not required. This might be helpful in situations such as: blind users and drivers or pilots where the user would want to choose from a menu of options but not want to direct his attention to a display screen.

SUMMARY

[0145] All of the processes described above may be embodied in, and fully automated via, software code modules executed by one or more general purpose or specially configured computers. The code modules may be stored in any type of computer-readable medium or other computer storage device. Some or all of the methods may alternatively be embodied in specialized computer hardware. In addition, the components referred to herein may be implemented in hardware, software, firmware, or a combination thereof.

[0146] Any process descriptions, elements, or blocks in the flow diagrams described herein and/or depicted in the attached figures should be understood as potentially representing modules, segments, or portions of code which include one or more executable instructions for implementing specific logical functions or steps in the process. Alternate implementations are included within the scope of the embodiments described herein in which elements or functions may be deleted, executed out of order from that shown or discussed, including substantially concurrently or in reverse order, depending on the functionality involved, as would be understood by those skilled in the art.

[0147] One skilled in the relevant art will appreciate that the methods and systems described above may be implemented by one or more computing devices, such as a memory for storing computer executable components for implementing the processes shown, as well as a process unit for executing such components. It will further be appreciated that the data and/or components described above may be stored on a computer readable medium and loaded into a memory of a computer device using a drive mechanism, such as a CD-ROM, DVD-ROM, or network interface, for reading such computer readable medium. Further, the components and/or data can be included in a single device or distributed in any manner.

[0148] The foregoing description details certain embodiments of the invention. It will be appreciated, however, that no matter how detailed the foregoing appears in text, the invention can be practiced in many ways. As is also stated above, it should be noted that the use of particular terminology when describing certain features or aspects of the invention should not be taken to imply that the terminology is being re-defined herein to be restricted to including any specific characteristics of the features or aspects of the invention with which that terminology is associated.

What is claimed is:

1. A method for providing a user interface on a computing device, the method comprising:

displaying a first menu on a display of a computing device, the first menu having a first plurality of icons arranged in an icon region that extends substantially around an initial position of a cursor, wherein the icon region defines a central region within the icon region that includes the initial cursor position;

detecting movement of the cursor to a second position within the central region, wherein the second position of the cursor is near a first icon of the first plurality of icons or includes at least a portion of the first icon;

changing an appearance of the first icon in response to detecting movement of the cursor to the second position, wherein the change in appearance indicates that the icon is temporarily selected;

initiating a first action associated with the first icon in response to detecting an input from the user indicating that the first icon should be permanently selected,

wherein at least some of the method is performed by the computing device.

2. The method of claim **1**, further comprising displaying information associated with the temporarily selected icon.

3. The method of claim **2**, wherein the information comprises a second menu comprising a second plurality of icons that are displayed in the icon region.

4. The method of claim **3**, wherein at least some of the first plurality of icons are replaced by at least some of the second plurality of icons in response to temporary selection of the first icon.

5. The method of claim **1**, wherein the cursor comprises a cursor that is controlled by an input device coupled to the computing system.

6. The method of claim **1**, wherein the cursor comprises a position at which an input device interfaced with a display device of the computing system.

7. The method of claim **6**, wherein the input device comprises a stylus or finger.

8. A method for providing a user interface on a computing device, the method comprising:

displaying a first menu on a display of the computing device, the first menu having a plurality of icons arranged substantially around a current position of a cursor, the plurality of icons defining a central region of the display between the plurality of icons and including the current position of the cursor;

receiving a first input indicative of movement of the cursor;

determining which of the plurality of icons is to be temporarily selected based at least in part on a pattern of the first input within the central region; and

temporarily selecting the determined icon.

9. The method of claim **8**, wherein the icons are arranged such that the current position of the cursor is generally centered within the icons, such that the pattern of the first input can be used to indicate temporary selection of any of the icons in a relatively quick manner.

10. The method of claim **8**, wherein one or more of the icons are displayed differently than others and/or one of the icons is temporarily selected before receiving the first input, based on likelihoods of selection of respective icons, a user preference, or a default setting.

11. The method of claim **8**, wherein the first input comprises a motion of the computing device.

12. The method of claim **8**, wherein the first input comprises an input from an input device interfaced with the display of the computing device.

13. The method of claim **12**, wherein the input device comprises a mouse.

14. The method of claim **12**, wherein the input device comprises a touch screen sensor configured to sense contact with a stylus or finger.

15. The method of claim **12**, wherein an area corresponding to the first menu is divided into a plurality of selectable regions about the central region so that selectable regions at least partially overlap with respective icons, wherein the pattern of the first input comprises movement of the cursor to a selectable region of an icon that is to be temporarily selected.

16. The method of claim **15**, wherein each of the icons is substantially within its corresponding selectable region.

17. The method of claim **15**, wherein at least one of the selectable regions includes its corresponding icon and a portion of one or more neighboring icons.

18. The method of claim **15**, wherein at least one selectable region is larger than other selectable regions and includes one or more portions of neighboring icons in response to a predetermined likelihood of use of the icon corresponding to the at least one selectable region or the user's preference.

19. The method of claim **15**, wherein at least one selectable region is larger than other selectable regions.

20. The method of claim **8**, wherein the pattern of the first input comprises a beginning position within the central region and an ending position that defines a parameter that is usable in the determining of which of the plurality of icons is to be temporarily selected.

21. The method of claim **20**, wherein the parameter comprises a direction parameter that is usable in the determining of which of the plurality of icons is to be temporarily selected.

22. The method of claim **20**, wherein the parameter comprises a distance parameter that is usable in the determining of which of the plurality of icons is to be temporarily selected.

23. The method of claim **22**, wherein the distance parameter comprises a closest distance between the ending position and an icon.

24. The method of claim **22**, wherein the distance parameter comprises a distance between the ending position and a center of an icon.

25. The method of claim **22**, wherein the distance parameter comprises an average distance between the ending position and one or more features on an icon.

26. A computing system, comprising:

a display screen;

an input device configured to facilitate interaction with a user; and

a processor configured to execute software code that causes the computing system to

display a menu on the display screen, the menu having a plurality of icons arranged about a home region;

detect an input facilitated by the input device and indicative of the user's desire to at least temporarily select one of the icons; and

determine which of the icons is to be at least temporarily selected based at least in part on a pattern of the input, the pattern involving at least a part of the home region.

27. The system of claim **26**, wherein the icons are arranged such that the home region is approximately centered relative to the icons.

28. The system of claim **26**, wherein the input comprises a motion of the computing system.

29. The system of claim **28**, wherein the motion comprises a tilt towards an icon to be temporarily selected.

30. The system of claim **29**, wherein the input device comprises one or more accelerometers to detect the tilt.

31. A method for providing a user interface on a computing device, the method comprising:

displaying a first menu on a display of a computing device, the first menu having a first plurality of icons arranged in an icon region that extends substantially around an interaction position, wherein the interaction position comprises an area of the display where a user or an apparatus controlled by a user touched the display, a current position of a cursor, or a predetermined position on the display;

receiving a first user-initiated input indicative of movement from the interaction position; and

in response to the movement, selecting an icon associated with a direction of the first user-initiated input,

wherein at least some of the method is performed by the computing device.

32. The method of claim **31**, wherein selecting the icon comprises one or more of emitting an audible sound or changing an appearance of the icon.

33. The method of claim **32**, further comprising initiating a software process associated with the icon in response to one or more of

receiving a second user-initiated input indicative of permanent selection of the icon; or

receiving no user-initiated input for at least a predetermined time period.

34. The method of claim **33**, wherein the predetermined time period is selected from the group comprising about 50, 100, 200, 500, or 1000 milliseconds.

35. The method of claim **33**, wherein the software process comprises displaying a second menu on the display or performing one or more functions of a software application on the computing device.

36. The method of claim **31**, wherein selecting the icon comprises:

initiating a software process associated with the icon.

37. The method of claim **36**, wherein the software process comprises displaying a second menu on the display or performing one or more functions of a software application on the computing device.

38. The method of claim **31**, wherein the first user-initiated input comprises a motion by the user or the apparatus controlled by the user, movement of an input device, or movement of the computing device.

39. The method of claim **38**, wherein movement of the input device is detected by one or more accelerometers of the computing device.

* * * * *