US011405429B2

(12) **United States Patent**
Raleigh

(10) **Patent No.: US 11,405,429 B2**
(45) **Date of Patent: *Aug. 2, 2022**

(54) **SECURITY TECHNIQUES FOR DEVICE ASSISTED SERVICES**

(71) Applicant: **Headwater Research LLC**, Tyler, TX (US)

(72) Inventor: **Gregory G. Raleigh**, Woodside, CA (US)

(73) Assignee: **HEADWATER RESEARCH LLC**, Tyler, TX (US)

(*) Notice: Subject to any disclaimer, the term of this patent is extended or adjusted under 35 U.S.C. 154(b) by 0 days.

This patent is subject to a terminal disclaimer.

(21) Appl. No.: **16/907,887**

(22) Filed: **Jun. 22, 2020**

(65) **Prior Publication Data**

US 2020/0322802 A1 Oct. 8, 2020

Related U.S. Application Data

(63) Continuation of application No. 16/034,362, filed on Jul. 13, 2018, now Pat. No. 10,694,385, which is a (Continued)

(51) **Int. Cl.**
H04L 9/40 (2022.01)
G06Q 10/06 (2012.01)
(Continued)

(52) **U.S. Cl.**
CPC ***H04L 63/20*** (2013.01); ***G06F 15/177*** (2013.01); ***G06Q 10/06315*** (2013.01);
(Continued)

(58) **Field of Classification Search**
CPC G06F 15/177; G06Q 10/06315; G06Q 10/06375; G06Q 20/102; G06Q 20/20;
(Continued)

(56) **References Cited**

U.S. PATENT DOCUMENTS

5,131,020 A 7/1992 Liebesny et al.
5,283,904 A 2/1994 Carson et al.
(Continued)

FOREIGN PATENT DOCUMENTS

CA 2688553 A1 12/2008
CN 1310401 A 8/2001
(Continued)

OTHER PUBLICATIONS

"Ads and movies on the run," the Gold Coast Bulletin, Southport, Qld, Jan. 29, 2008.
(Continued)

Primary Examiner — Benjamin A Kaplan
(74) *Attorney, Agent, or Firm* — Farjami & Farjami LLP

(57) **ABSTRACT**

Security techniques for device assisted services are provided. In some embodiments, secure service measurement and/or control execution partition is provided. In some embodiments, implementing a service profile executed at least in part in a secure execution environment of a processor of a communications device for assisting control of the communications device use of a service on a wireless network, in which the service profile includes a plurality of service policy settings, and wherein the service profile is associated with a service plan that provides for access to the service on the wireless network; monitoring use of the service based on the service profile; and verifying the use of the service based on the monitored use of the service.

12 Claims, 11 Drawing Sheets

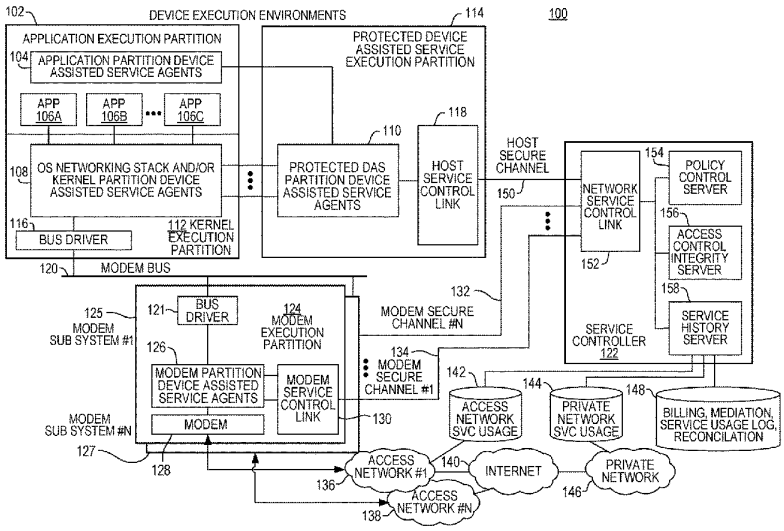

GOOGLE EXHIBIT 1028
Google v. Headwater
IPR2026-00441

Related U.S. Application Data

continuation of application No. 14/948,065, filed on Nov. 20, 2015, now Pat. No. 10,028,144, which is a continuation of application No. 13/737,748, filed on Jan. 9, 2013, now Pat. No. 9,198,042, which is a continuation of application No. 12/694,445, filed on Jan. 27, 2010, now Pat. No. 8,391,834, which is a continuation-in-part of application No. 12/380,780, filed on Mar. 2, 2009, now Pat. No. 8,839,388.

(60) Provisional application No. 61/252,151, filed on Oct. 15, 2009, provisional application No. 61/207,739, filed on Feb. 13, 2009, provisional application No. 61/207,393, filed on Feb. 10, 2009, provisional application No. 61/206,944, filed on Feb. 4, 2009, provisional application No. 61/206,354, filed on Jan. 28, 2009.

(51) **Int. Cl.**

G06Q 20/10	(2012.01)
G06Q 20/20	(2012.01)
G06Q 20/40	(2012.01)
G06Q 30/02	(2012.01)
G06Q 30/04	(2012.01)
G06Q 30/06	(2012.01)
G06Q 40/00	(2012.01)
H04L 12/14	(2006.01)
H04L 41/0893	(2022.01)
H04M 15/00	(2006.01)
H04L 67/63	(2022.01)
H04L 67/55	(2022.01)
H04W 88/08	(2009.01)
H04L 67/306	(2022.01)
H04W 4/50	(2018.01)
H04W 12/037	(2021.01)
H04L 41/5003	(2022.01)
H04W 4/24	(2018.01)
G06F 15/177	(2006.01)
H04L 9/32	(2006.01)
H04W 28/02	(2009.01)
H04W 12/08	(2021.01)
H04L 47/2408	(2022.01)
H04W 8/20	(2009.01)
H04W 28/12	(2009.01)
H04W 48/14	(2009.01)
H04W 4/20	(2018.01)
H04W 12/00	(2021.01)
H04W 24/08	(2009.01)
H04W 12/02	(2009.01)
H04L 51/046	(2022.01)
H04W 4/12	(2009.01)
H04W 4/18	(2009.01)
H04W 8/18	(2009.01)
H04W 72/04	(2009.01)
H04L 47/20	(2022.01)
H04W 4/02	(2018.01)
H04L 41/0806	(2022.01)
H04L 41/5054	(2022.01)
H04L 67/145	(2022.01)
H04W 12/06	(2021.01)
H04W 48/16	(2009.01)
H04L 41/5025	(2022.01)
H04L 67/00	(2022.01)
H04L 67/564	(2022.01)
H04W 8/02	(2009.01)
H04W 84/04	(2009.01)
H04W 84/12	(2009.01)
H04W 88/06	(2009.01)
H04L 41/08	(2022.01)

(52) **U.S. Cl.**

CPC ***G06Q 10/06375*** (2013.01); ***G06Q 20/102*** (2013.01); ***G06Q 20/20*** (2013.01); ***G06Q 20/40*** (2013.01); ***G06Q 30/0207*** (2013.01); ***G06Q 30/0241*** (2013.01); ***G06Q 30/0283*** (2013.01); ***G06Q 30/0284*** (2013.01); ***G06Q 30/04*** (2013.01); ***G06Q 30/0601*** (2013.01); ***G06Q 40/00*** (2013.01); ***G06Q 40/12*** (2013.12); ***H04L 9/32*** (2013.01); ***H04L 9/3247*** (2013.01); ***H04L 12/14*** (2013.01); ***H04L 41/0806*** (2013.01); ***H04L 41/0893*** (2013.01); ***H04L 41/5003*** (2013.01); ***H04L 41/5054*** (2013.01); ***H04L 47/20*** (2013.01); ***H04L 47/2408*** (2013.01); ***H04L 51/046*** (2013.01); ***H04L 63/0236*** (2013.01); ***H04L 63/04*** (2013.01); ***H04L 63/0428*** (2013.01); ***H04L 63/08*** (2013.01); ***H04L 63/0853*** (2013.01); ***H04L 63/0892*** (2013.01); ***H04L 63/10*** (2013.01); ***H04L 67/145*** (2013.01); ***H04L 67/26*** (2013.01); ***H04L 67/306*** (2013.01); ***H04L 67/327*** (2013.01); ***H04M 15/00*** (2013.01); ***H04M 15/58*** (2013.01); ***H04M 15/61*** (2013.01); ***H04M 15/80*** (2013.01); ***H04M 15/88*** (2013.01); ***H04W 4/02*** (2013.01); ***H04W 4/12*** (2013.01); ***H04W 4/18*** (2013.01); ***H04W 4/20*** (2013.01); ***H04W 4/24*** (2013.01); ***H04W 4/50*** (2018.02); ***H04W 8/18*** (2013.01); ***H04W 8/20*** (2013.01); ***H04W 12/00*** (2013.01); ***H04W 12/02*** (2013.01); ***H04W 12/037*** (2021.01); ***H04W 12/06*** (2013.01); ***H04W 12/08*** (2013.01); ***H04W 24/08*** (2013.01); ***H04W 28/02*** (2013.01); ***H04W 28/0215*** (2013.01); ***H04W 28/0268*** (2013.01); ***H04W 28/12*** (2013.01); ***H04W 48/14*** (2013.01); ***H04W 48/16*** (2013.01); ***H04W 72/0453*** (2013.01); ***H04W 88/08*** (2013.01); *H04L 41/0876* (2013.01); *H04L 41/5025* (2013.01); *H04L 67/2819* (2013.01); *H04L 67/34* (2013.01); *H04M 2215/0188* (2013.01); *H04W 8/02* (2013.01); *H04W 84/04* (2013.01); *H04W 84/042* (2013.01); *H04W 84/12* (2013.01); *H04W 88/06* (2013.01); *Y02P 90/80* (2015.11)

(58) **Field of Classification Search**

CPC G06Q 20/32; G06Q 20/40; G06Q 30/0207; G06Q 30/0241; G06Q 30/0283; G06Q 30/0284; G06Q 30/04; G06Q 30/0601; G06Q 40/00; G06Q 40/12; H04L 12/14; H04L 12/1407; H04L 41/0806; H04L 41/0876; H04L 41/0893; H04L 41/5003; H04L 41/5025; H04L 41/5054; H04L 47/20; H04L 47/2408; H04L 51/046; H04L 63/0236; H04L 63/04; H04L 63/0428; H04L 63/08; H04L 63/0853; H04L 63/0892; H04L 63/10; H04L 63/20; H04L 67/145; H04L 67/26; H04L 67/2819; H04L 67/306; H04L 67/327; H04L 67/34; H04L 9/32; H04L 9/3247; H04M 15/00; H04M 15/49; H04M 15/58; H04M 15/61; H04M 15/66; H04M 15/80; H04M 15/8055; H04M 15/88; H04M

2215/0188; H04W 12/00; H04W 12/02; H04W 12/037; H04W 12/06; H04W 12/08; H04W 24/08; H04W 28/02; H04W 28/0215; H04W 28/0268; H04W 28/12; H04W 4/02; H04W 4/12; H04W 4/18; H04W 4/20; H04W 4/24; H04W 4/50; H04W 48/14; H04W 48/16; H04W 72/0453; H04W 8/02; H04W 8/18; H04W 8/20; H04W 84/04; H04W 84/042; H04W 84/12; H04W 88/06; H04W 88/08; Y02P 90/80

USPC 726/1

See application file for complete search history.

(56) **References Cited**

U.S. PATENT DOCUMENTS

5,325,532 A 6/1994 Crosswy et al.
5,572,528 A 11/1996 Shuen
5,577,100 A 11/1996 McGregor et al.
5,594,777 A 1/1997 Makkonen et al.
5,617,539 A 4/1997 Ludwig et al.
5,630,159 A 5/1997 Zancho
5,633,484 A 5/1997 Zancho et al.
5,633,868 A 5/1997 Baldwin et al.
5,754,953 A 5/1998 Briancon et al.
5,774,532 A 6/1998 Gottlieb et al.
5,794,142 A 8/1998 Vanttila et al.
5,814,798 A 9/1998 Zancho
5,889,477 A 3/1999 Fastenrath
5,892,900 A 4/1999 Ginter et al.
5,903,845 A 5/1999 Buhrmann et al.
5,915,008 A 6/1999 Dulman
5,915,226 A 6/1999 Martineau
5,933,778 A 8/1999 Buhrmann et al.
5,940,472 A 8/1999 Newman et al.
5,974,439 A 10/1999 Bollella
5,983,270 A 11/1999 Abraham et al.
6,035,281 A 3/2000 Crosskey et al.
6,038,452 A 3/2000 Strawczynski et al.
6,038,540 A 3/2000 Krist et al.
6,047,268 A 4/2000 Bartoli et al.
6,058,434 A 5/2000 Wilt et al.
6,061,571 A 5/2000 Tamura
6,064,878 A 5/2000 Denker et al.
6,078,953 A 6/2000 Vaid et al.
6,081,591 A 6/2000 Skoog
6,098,878 A 8/2000 Dent et al.
6,104,700 A 8/2000 Haddock et al.
6,115,823 A 9/2000 Velasco et al.
6,119,933 A 9/2000 Wong et al.
6,125,391 A 9/2000 Meltzer et al.
6,141,565 A 10/2000 Feuerstein et al.
6,141,686 A 10/2000 Jackowski et al.
6,148,336 A 11/2000 Thomas et al.
6,154,738 A 11/2000 Call
6,157,636 A 12/2000 Voit et al.
6,185,576 B1 2/2001 Mcintosh
6,198,915 B1 3/2001 McGregor et al.
6,219,786 B1 4/2001 Cunningham et al.
6,226,277 B1 5/2001 Chuah
6,246,870 B1 6/2001 Dent et al.
6,263,055 B1 7/2001 Garland et al.
6,292,828 B1 9/2001 Williams
6,317,584 B1 11/2001 Abu-Amara et al.
6,370,139 B2 4/2002 Redmond
6,381,316 B2 4/2002 Joyce et al.
6,393,014 B1 5/2002 Daly et al.
6,397,259 B1 5/2002 Lincke et al.
6,401,113 B2 6/2002 Lazaridis et al.
6,418,147 B1 7/2002 Wiedeman
6,438,575 B1 8/2002 Khan et al.
6,445,777 B1 9/2002 Clark
6,449,479 B1 9/2002 Sanchez
6,466,984 B1 10/2002 Naveh et al.
6,477,670 B1 11/2002 Ahmadvand
6,502,131 B1 12/2002 Vaid et al.
6,505,114 B2 1/2003 Luciani
6,510,152 B1 1/2003 Gerszberg et al.
6,522,629 B1 2/2003 Anderson, Sr.
6,532,235 B1 3/2003 Benson et al.
6,532,579 B2 3/2003 Sato et al.
6,535,855 B1 3/2003 Cahill et al.
6,535,949 B1 3/2003 Parker
6,539,082 B1 3/2003 Lowe et al.
6,542,500 B1 4/2003 Gerszberg et al.
6,542,992 B1 4/2003 Peirce et al.
6,546,016 B1 4/2003 Gerszberg et al.
6,563,806 B1 5/2003 Yano et al.
6,570,974 B1 5/2003 Gerszberg et al.
6,574,321 B1 6/2003 Cox et al.
6,574,465 B2 6/2003 Marsh et al.
6,578,076 B1 6/2003 Putzolu
6,581,092 B1 6/2003 Motoyama
6,591,098 B1 7/2003 Shieh et al.
6,598,034 B1 7/2003 Kloth
6,601,040 B1 7/2003 Kolls
6,603,969 B1 8/2003 Vuoristo et al.
6,603,975 B1 8/2003 Inouchi et al.
6,606,744 B1 8/2003 Mikurak
6,628,934 B2 9/2003 Rosenberg et al.
6,631,122 B1 10/2003 Arunachalam et al.
6,636,721 B2 10/2003 Threadgill et al.
6,639,975 B1 10/2003 O'Neal et al.
6,640,097 B2 10/2003 Corrigan et al.
6,640,334 B1 10/2003 Rasmussen
6,650,887 B2 11/2003 McGregor et al.
6,651,101 B1 11/2003 Gai et al.
6,654,786 B1 11/2003 Fox et al.
6,654,814 B1 11/2003 Britton et al.
6,658,254 B1 12/2003 Purdy et al.
6,662,014 B1 12/2003 Walsh
6,678,516 B2 1/2004 Nordman et al.
6,683,853 B1 1/2004 Kannas et al.
6,684,244 B1 1/2004 Goldman et al.
6,690,918 B2 2/2004 Evans et al.
6,694,362 B1 2/2004 Secor et al.
6,697,821 B2 2/2004 Ziff et al.
6,725,031 B2 4/2004 Watler et al.
6,725,256 B1 4/2004 Albal et al.
6,732,176 B1 5/2004 Stewart et al.
6,735,206 B1 5/2004 Oki et al.
6,748,195 B1 6/2004 Phillips
6,748,437 B1 6/2004 Mankude et al.
6,751,296 B1 6/2004 Albal et al.
6,754,470 B2 6/2004 Hendrickson et al.
6,757,717 B1 6/2004 Goldstein
6,760,417 B1 7/2004 Wallenius
6,763,000 B1 7/2004 Walsh
6,763,226 B1 7/2004 McZeal, Jr.
6,765,864 B1 7/2004 Natarajan et al.
6,765,925 B1 7/2004 Sawyer et al.
6,782,412 B2 8/2004 Brophy et al.
6,785,889 B1 8/2004 Williams
6,792,461 B1 9/2004 Hericourt
6,829,596 B1 12/2004 Frazee
6,829,696 B1 12/2004 Balmer et al.
6,839,340 B1 1/2005 Voit et al.
6,842,628 B1 1/2005 Arnold et al.
6,873,988 B2 3/2005 Herrmann et al.
6,876,653 B2 4/2005 Ambe et al.
6,879,825 B1 4/2005 Daly
6,882,718 B1 4/2005 Smith
6,885,997 B1 4/2005 Roberts
6,901,440 B1 5/2005 Bimm et al.
6,920,455 B1 7/2005 Weschler
6,922,562 B2 7/2005 Ward et al.
6,928,280 B1 8/2005 Xanthos et al.
6,934,249 B1 8/2005 Bertin et al.
6,934,751 B2 8/2005 Jayapalan et al.
6,947,723 B1 9/2005 Gumani et al.
6,947,985 B2 9/2005 Hegli et al.
6,952,428 B1 10/2005 Necka et al.
6,957,067 B1 10/2005 Iyer et al.

(56) **References Cited**

U.S. PATENT DOCUMENTS

6,959,202	B2	10/2005	Heinonen et al.
6,959,393	B2	10/2005	Hollis et al.
6,965,667	B2	11/2005	Trabandt et al.
6,965,872	B1	11/2005	Grdina
6,967,958	B2	11/2005	Ono et al.
6,970,692	B2	11/2005	Tysor
6,970,927	B1	11/2005	Stewart et al.
6,982,733	B1	1/2006	McNally et al.
6,983,370	B2	1/2006	Eaton et al.
6,996,062	B1	2/2006	Freed et al.
6,996,076	B1	2/2006	Forbes et al.
6,996,393	B2	2/2006	Pyhalammi et al.
6,998,985	B2	2/2006	Reisman et al.
7,002,920	B1	2/2006	Ayyagari et al.
7,007,295	B1	2/2006	Rose et al.
7,013,469	B2	3/2006	Smith et al.
7,017,189	B1	3/2006	DeMello et al.
7,024,200	B2	4/2006	McKenna et al.
7,024,460	B2	4/2006	Koopmas et al.
7,027,055	B2	4/2006	Anderson et al.
7,027,408	B2	4/2006	Nabkel et al.
7,031,733	B2	4/2006	Alminana et al.
7,032,072	B1	4/2006	Quinn et al.
7,039,027	B2	5/2006	Bridgelall
7,039,037	B2	5/2006	Wang et al.
7,039,403	B2	5/2006	Wong
7,039,713	B1	5/2006	Van Gunter et al.
7,042,988	B2	5/2006	Juitt et al.
7,043,225	B1	5/2006	Patel et al.
7,043,226	B2	5/2006	Yamauchi
7,043,268	B2	5/2006	Yukie et al.
7,047,276	B2	5/2006	Liu et al.
7,058,022	B1	6/2006	Carolan et al.
7,058,968	B2	6/2006	Rowland et al.
7,068,600	B2	6/2006	Cain
7,069,248	B2	6/2006	Huber
7,082,422	B1	7/2006	Zirngibl et al.
7,084,775	B1	8/2006	Smith
7,092,696	B1	8/2006	Hosain et al.
7,095,754	B2	8/2006	Benveniste
7,102,620	B2	9/2006	Harries et al.
7,110,753	B2	9/2006	Campen
7,113,780	B2	9/2006	McKenna et al.
7,113,997	B2	9/2006	Jayapalan et al.
7,120,133	B1	10/2006	Joo et al.
7,133,386	B2	11/2006	Holur et al.
7,133,695	B2	11/2006	Beyda
7,136,361	B2	11/2006	Benveniste
7,139,569	B2	11/2006	Kato
7,142,876	B2	11/2006	Trossen et al.
7,149,229	B1	12/2006	Leung
7,149,521	B2	12/2006	Sundar et al.
7,151,764	B1	12/2006	Heinonen et al.
7,158,792	B1	1/2007	Cook et al.
7,162,237	B1	1/2007	Silver et al.
7,165,040	B2	1/2007	Ehrman et al.
7,167,078	B2	1/2007	Pourchot
7,174,156	B1	2/2007	Mangal
7,174,174	B2	2/2007	Boris et al.
7,177,919	B1	2/2007	Truong et al.
7,180,855	B1	2/2007	Lin
7,181,017	B1	2/2007	Nagel et al.
7,191,248	B2	3/2007	Chattopadhyay et al.
7,197,321	B2	3/2007	Erskine et al.
7,200,112	B2	4/2007	Sundar et al.
7,200,551	B1	4/2007	Senez
7,203,169	B1	4/2007	Okholm et al.
7,203,721	B1	4/2007	Ben-Efraim et al.
7,203,752	B2	4/2007	Rice et al.
7,212,491	B2	5/2007	Koga
7,219,123	B1	5/2007	Fiechter et al.
7,222,190	B2	5/2007	Klinker et al.
7,222,304	B2	5/2007	Beaton et al.
7,224,968	B2	5/2007	Dobson et al.
7,228,354	B2	6/2007	Chambliss et al.
7,236,780	B2	6/2007	Benco
7,242,668	B2	7/2007	Kan et al.
7,242,920	B2	7/2007	Morris
7,245,901	B2	7/2007	McGregor et al.
7,248,570	B2	7/2007	Bahl et al.
7,251,218	B2	7/2007	Jorgensen
7,260,382	B1	8/2007	Lamb et al.
7,266,371	B1	9/2007	Amin et al.
7,269,157	B2	9/2007	Klinker et al.
7,271,765	B2	9/2007	Stilp et al.
7,272,660	B1	9/2007	Powers et al.
7,280,816	B2	10/2007	Fratti et al.
7,280,818	B2	10/2007	Clayton
7,283,561	B1	10/2007	Picher-Dempsey
7,283,963	B1	10/2007	Fitzpatrick et al.
7,286,834	B2	10/2007	Walter
7,286,848	B2	10/2007	Vireday et al.
7,289,489	B1	10/2007	Kung et al.
7,290,283	B2	10/2007	Copeland, III
7,310,424	B2	12/2007	Gehring et al.
7,313,237	B2	12/2007	Bahl et al.
7,315,892	B2	1/2008	Freimuth et al.
7,317,699	B2	1/2008	Godfrey et al.
7,318,111	B2	1/2008	Zhao
7,320,029	B2	1/2008	Rinne et al.
7,322,044	B2	1/2008	Hrastar
7,324,447	B1	1/2008	Morford
7,325,037	B2	1/2008	Lawson
7,336,960	B2	2/2008	Zavalkovsky et al.
7,340,772	B2	3/2008	Panasyuk et al.
7,346,410	B2	3/2008	Uchiyama
7,349,695	B2	3/2008	Oommen et al.
7,353,533	B2	4/2008	Wright et al.
7,356,011	B1	4/2008	Waters et al.
7,356,337	B2	4/2008	Florence
7,366,497	B2	4/2008	Nagata
7,366,654	B2	4/2008	Moore
7,366,934	B1	4/2008	Narayan et al.
7,369,848	B2	5/2008	Jiang
7,369,856	B2	5/2008	Ovadia
7,373,136	B2	5/2008	Watler et al.
7,373,179	B2	5/2008	Stine et al.
7,379,731	B2	5/2008	Natsuno et al.
7,388,950	B2	6/2008	Elsey et al.
7,389,412	B2	6/2008	Sharma et al.
7,391,724	B2	6/2008	Alakoski et al.
7,395,056	B2	7/2008	Petermann
7,395,244	B1	7/2008	Kingsford
7,401,338	B1	7/2008	Bowen et al.
7,403,763	B2	7/2008	Maes
7,409,447	B1	8/2008	Assadzadeh
7,409,569	B2	8/2008	Illowsky et al.
7,411,930	B2	8/2008	Montojo et al.
7,418,253	B2	8/2008	Kavanah
7,418,257	B2	8/2008	Kim
7,421,004	B2	9/2008	Feher
7,423,971	B1	9/2008	Mohaban et al.
7,428,750	B1	9/2008	Dunn et al.
7,433,362	B2	10/2008	Mallya et al.
7,436,816	B2	10/2008	Mehta et al.
7,440,433	B2	10/2008	Rink et al.
7,444,669	B1	10/2008	Bahl et al.
7,450,591	B2	11/2008	Korling et al.
7,450,927	B1	11/2008	Creswell et al.
7,454,191	B2	11/2008	Dawson et al.
7,457,265	B2	11/2008	Julka et al.
7,457,870	B1	11/2008	Lownsbrough et al.
7,460,837	B2	12/2008	Diener
7,466,652	B2	12/2008	Lau et al.
7,467,160	B2	12/2008	McIntyre
7,472,189	B2	12/2008	Mallya et al.
7,478,420	B2	1/2009	Wright et al.
7,486,185	B2	2/2009	Culpepper et al.
7,486,658	B2	2/2009	Kumar
7,493,659	B1	2/2009	Wu et al.
7,496,652	B2	2/2009	Pezzutti
7,499,438	B2	3/2009	Hinman et al.
7,499,537	B2	3/2009	Elsey et al.
7,502,672	B1	3/2009	Kolls

(56) **References Cited**

U.S. PATENT DOCUMENTS

7,505,756	B2	3/2009	Bahl
7,505,795	B1	3/2009	Lim et al.
7,508,799	B2	3/2009	Sumner et al.
7,512,128	B2	3/2009	DiMambro et al.
7,512,131	B2	3/2009	Svensson et al.
7,515,608	B2	4/2009	Yuan et al.
7,515,926	B2	4/2009	Bu et al.
7,516,219	B2	4/2009	Moghaddam et al.
7,522,549	B2	4/2009	Karaoguz et al.
7,522,576	B2	4/2009	Du et al.
7,526,541	B2	4/2009	Roese et al.
7,529,204	B2	5/2009	Bourlas et al.
7,535,880	B1	5/2009	Hinman et al.
7,536,695	B2	5/2009	Alam et al.
7,539,132	B2	5/2009	Werner et al.
7,539,862	B2	5/2009	Edgett et al.
7,540,408	B2	6/2009	Levine et al.
7,545,782	B2	6/2009	Rayment et al.
7,546,460	B2	6/2009	Maes
7,546,629	B2	6/2009	Albert et al.
7,548,875	B2	6/2009	Mikkelsen et al.
7,548,976	B2	6/2009	Bahl et al.
7,551,921	B2	6/2009	Petermann
7,551,922	B2	6/2009	Roskowski et al.
7,554,983	B1	6/2009	Muppala
7,555,757	B2	6/2009	Smith et al.
7,561,899	B2	7/2009	Lee
7,562,213	B1	7/2009	Timms
7,564,799	B2	7/2009	Holland et al.
7,565,141	B2	7/2009	Macaluso
7,574,509	B2	8/2009	Nixon et al.
7,574,731	B2	8/2009	Fascenda
7,577,431	B2	8/2009	Jiang
7,580,356	B1	8/2009	Mishra et al.
7,580,857	B2	8/2009	VanFleet et al.
7,583,964	B2	9/2009	Wong
7,584,298	B2	9/2009	Klinker et al.
7,585,217	B2	9/2009	Lutnick et al.
7,586,871	B2	9/2009	Hamilton et al.
7,593,417	B2	9/2009	Wang et al.
7,593,730	B2	9/2009	Khandelwal et al.
7,596,373	B2	9/2009	Mcgregor et al.
7,599,288	B2	10/2009	Cole et al.
7,599,714	B2	10/2009	Kuzminskiy
7,602,746	B2	10/2009	Calhoun et al.
7,606,918	B2	10/2009	Holzman et al.
7,607,041	B2	10/2009	Kraemer et al.
7,609,650	B2	10/2009	Roskowski et al.
7,609,700	B1	10/2009	Ying et al.
7,610,047	B2	10/2009	Hicks, III et al.
7,610,057	B2	10/2009	Bahl et al.
7,610,328	B2	10/2009	Haase et al.
7,610,396	B2	10/2009	Taglienti et al.
7,614,051	B2	11/2009	Glaum et al.
7,616,962	B2	11/2009	Oswal et al.
7,617,516	B2	11/2009	Huslak et al.
7,620,041	B2	11/2009	Dunn et al.
7,620,065	B2	11/2009	Falardeau
7,620,162	B2	11/2009	Aaron et al.
7,620,383	B2	11/2009	Taglienti et al.
7,627,314	B2	12/2009	Carlson et al.
7,627,600	B2	12/2009	Citron et al.
7,627,767	B2	12/2009	Sherman et al.
7,627,872	B2	12/2009	Hebeler et al.
7,633,438	B2	12/2009	Tysowski
7,634,388	B2	12/2009	Archer et al.
7,636,574	B2	12/2009	Poosala
7,636,626	B2	12/2009	Oesterling et al.
7,643,411	B2	1/2010	Andreasen et al.
7,644,151	B2	1/2010	Jerrim et al.
7,644,267	B2	1/2010	Ylikoski et al.
7,644,414	B2	1/2010	Smith et al.
7,647,047	B2	1/2010	Moghaddam et al.
7,650,137	B2	1/2010	Jobs et al.
7,653,394	B2	1/2010	McMillin
7,656,271	B2	2/2010	Ehrman et al.
7,657,920	B2	2/2010	Arseneau et al.
7,660,419	B1	2/2010	Ho
7,661,124	B2	2/2010	Ramanathan et al.
7,664,494	B2	2/2010	Jiang
7,668,176	B2	2/2010	Chuah
7,668,612	B1	2/2010	Okkonen
7,668,903	B2	2/2010	Edwards et al.
7,668,966	B2	2/2010	Klinker et al.
7,676,673	B2	3/2010	Weller et al.
7,680,086	B2	3/2010	Eglin
7,681,226	B2	3/2010	Kraemer et al.
7,684,370	B2	3/2010	Kezys
7,685,131	B2	3/2010	Batra et al.
7,685,254	B2	3/2010	Pandya
7,685,530	B2	3/2010	Sherrard et al.
7,688,792	B2	3/2010	Babbar et al.
7,693,107	B2	4/2010	De Froment
7,693,720	B2	4/2010	Kennewick et al.
7,697,540	B2	4/2010	Haddad et al.
7,710,932	B2	5/2010	Muthuswamy et al.
7,711,848	B2	5/2010	Maes
7,719,966	B2	5/2010	Luft et al.
7,720,206	B2	5/2010	Devolites et al.
7,720,464	B2	5/2010	Batta
7,720,505	B2	5/2010	Gopi et al.
7,720,960	B2	5/2010	Pruss et al.
7,721,296	B2	5/2010	Ricagni
7,724,716	B2	5/2010	Fadell
7,725,570	B1	5/2010	Lewis
7,729,326	B2	6/2010	Sekhar
7,730,123	B1	6/2010	Erickson et al.
7,734,784	B1	6/2010	Araujo et al.
7,742,406	B1	6/2010	Muppala
7,746,854	B2	6/2010	Ambe et al.
7,747,240	B1	6/2010	Briscoe et al.
7,747,699	B2	6/2010	Prueitt et al.
7,747,730	B1	6/2010	Harlow
7,752,330	B2	7/2010	Olsen et al.
7,756,056	B2	7/2010	Kim et al.
7,756,534	B2	7/2010	Anupam et al.
7,756,757	B1	7/2010	Oakes, III
7,760,137	B2	7/2010	Martucci et al.
7,760,711	B1	7/2010	Kung et al.
7,760,861	B1	7/2010	Croak et al.
7,765,294	B2	7/2010	Edwards et al.
7,769,397	B2	8/2010	Funato et al.
7,770,785	B2	8/2010	Jha et al.
7,774,323	B2	8/2010	Helfman
7,774,412	B1	8/2010	Schnepel
7,774,456	B1	8/2010	Lownsbrough et al.
7,778,176	B2	8/2010	Morford
7,778,643	B2	8/2010	Laroia et al.
7,792,257	B1	9/2010	Vanier et al.
7,792,538	B2	9/2010	Kozisek
7,792,708	B2	9/2010	Alva
7,797,019	B2	9/2010	Friedmann
7,797,060	B2	9/2010	Grgic et al.
7,797,204	B2	9/2010	Balent
7,797,401	B2	9/2010	Stewart et al.
7,801,523	B1	9/2010	Kenderov
7,801,783	B2	9/2010	Kende et al.
7,801,985	B1	9/2010	Pitkow et al.
7,802,724	B1	9/2010	Nohr
7,805,140	B2	9/2010	Friday et al.
7,805,522	B2	9/2010	Schlüter et al.
7,805,606	B2	9/2010	Birger et al.
7,809,351	B1	10/2010	Panda et al.
7,809,372	B2	10/2010	Rajaniemi
7,813,746	B2	10/2010	Rajkotia
7,817,615	B1	10/2010	Breau et al.
7,817,983	B2	10/2010	Cassett et al.
7,822,837	B1	10/2010	Urban et al.
7,822,849	B2	10/2010	Titus
7,826,427	B2	11/2010	Sood et al.
7,826,607	B1	11/2010	de Carvalho Resende et al.
7,835,275	B1	11/2010	Swan et al.
7,843,831	B2	11/2010	Morrill et al.
7,843,843	B1	11/2010	Papp, III et al.

(56) **References Cited**

U.S. PATENT DOCUMENTS

7,844,034	B1	11/2010	Oh et al.
7,844,728	B2	11/2010	Anderson et al.
7,848,768	B2	12/2010	Omori et al.
7,849,161	B2	12/2010	Koch et al.
7,849,170	B1	12/2010	Hargens et al.
7,849,477	B2	12/2010	Cristofalo et al.
7,853,255	B2	12/2010	Karaoguz et al.
7,853,656	B2	12/2010	Yach et al.
7,856,226	B2	12/2010	Wong et al.
7,860,088	B2	12/2010	Lioy
7,865,182	B2	1/2011	Macaluso
7,865,187	B2	1/2011	Ramer et al.
7,868,778	B2	1/2011	Kenwright
7,873,001	B2	1/2011	Silver
7,873,344	B2	1/2011	Bowser et al.
7,873,346	B2	1/2011	Petersson et al.
7,873,540	B2	1/2011	Arumugam
7,873,705	B2	1/2011	Kalish
7,877,090	B2	1/2011	Maes
7,881,199	B2	2/2011	Krstulich
7,881,697	B2	2/2011	Baker et al.
7,882,029	B2	2/2011	White
7,882,247	B2	2/2011	Sturniolo et al.
7,882,560	B2	2/2011	Kraemer et al.
7,886,047	B1	2/2011	Potluri
7,889,384	B2	2/2011	Armentrout et al.
7,890,084	B1	2/2011	Dudziak et al.
7,890,111	B2	2/2011	Bugenhagen
7,894,431	B2	2/2011	Goring et al.
7,899,039	B2	3/2011	Andreasen et al.
7,899,438	B2	3/2011	Baker et al.
7,903,553	B2	3/2011	Liu
7,907,970	B2	3/2011	Park et al.
7,908,358	B1	3/2011	Prasad et al.
7,911,975	B2	3/2011	Droz et al.
7,912,025	B2	3/2011	Pattenden et al.
7,912,056	B1	3/2011	Brassem
7,920,529	B1	4/2011	Mahler et al.
7,921,463	B2	4/2011	Sood et al.
7,925,740	B2	4/2011	Nath et al.
7,925,778	B1	4/2011	Wijnands et al.
7,929,959	B2	4/2011	DeAtley et al.
7,929,960	B2	4/2011	Martin et al.
7,929,973	B2	4/2011	Zavalkovsky et al.
7,930,327	B2	4/2011	Craft et al.
7,930,446	B2	4/2011	Kesselman et al.
7,930,553	B2	4/2011	Satarasinghe et al.
7,933,274	B2	4/2011	Verma et al.
7,936,736	B2	5/2011	Proctor, Jr. et al.
7,937,069	B2	5/2011	Rassam
7,937,450	B2	5/2011	Janik
7,940,685	B1	5/2011	Breslau et al.
7,940,751	B2	5/2011	Hansen
7,941,184	B2	5/2011	Prendergast et al.
7,944,948	B2	5/2011	Chow et al.
7,945,238	B2	5/2011	Baker et al.
7,945,240	B1	5/2011	Klock et al.
7,945,945	B2	5/2011	Graham et al.
7,948,952	B2	5/2011	Hurtta et al.
7,948,953	B2	5/2011	Melkote et al.
7,948,968	B2	5/2011	Voit et al.
7,949,529	B2	5/2011	Weider et al.
7,953,808	B2	5/2011	Sharp et al.
7,953,877	B2	5/2011	Vemula et al.
7,957,020	B2	6/2011	Mine et al.
7,957,381	B2	6/2011	Clermidy et al.
7,957,511	B2	6/2011	Drudis et al.
7,958,029	B1	6/2011	Bobich et al.
7,962,622	B2	6/2011	Friend et al.
7,965,983	B1	6/2011	Swan et al.
7,966,405	B2	6/2011	Sundaresan et al.
7,969,950	B2	6/2011	Iyer et al.
7,970,350	B2	6/2011	Sheynman
7,970,426	B2	6/2011	Poe et al.
7,974,624	B2	7/2011	Gallagher et al.
7,975,184	B2	7/2011	Goff et al.
7,978,627	B2	7/2011	Taylor et al.
7,978,686	B2	7/2011	Goyal et al.
7,979,069	B2	7/2011	Hupp et al.
7,979,889	B2	7/2011	Gladstone et al.
7,979,896	B2	7/2011	McMurtry et al.
7,984,130	B2	7/2011	Bogineni et al.
7,984,511	B2	7/2011	Kocher et al.
7,986,935	B1	7/2011	D'Souza et al.
7,987,496	B2	7/2011	Bryce et al.
7,987,510	B2	7/2011	Kocher et al.
7,990,049	B2	8/2011	Shioya
8,000,276	B2	8/2011	Scherzer et al.
8,000,318	B2	8/2011	Wiley et al.
8,005,009	B2	8/2011	McKee et al.
8,005,459	B2	8/2011	Balsillie
8,005,726	B1	8/2011	Bao
8,005,913	B1	8/2011	Carlander
8,005,988	B2	8/2011	Maes
8,010,080	B1	8/2011	Thenthiruperai et al.
8,010,081	B1	8/2011	Roskowski
8,010,082	B2	8/2011	Sutaria et al.
8,010,990	B2	8/2011	Ferguson et al.
8,015,133	B1	9/2011	Wu et al.
8,015,234	B2	9/2011	Lum et al.
8,015,249	B2	9/2011	Nayak et al.
8,019,687	B2	9/2011	Wang et al.
8,019,820	B2	9/2011	Son et al.
8,019,846	B2	9/2011	Roelens et al.
8,019,868	B2	9/2011	Rao et al.
8,019,886	B2	9/2011	Harrang et al.
8,023,425	B2	9/2011	Raleigh
8,024,397	B1	9/2011	Erickson et al.
8,024,424	B2	9/2011	Freimuth et al.
8,027,339	B2	9/2011	Short et al.
8,031,601	B2	10/2011	Feroz et al.
8,032,168	B2	10/2011	Ikaheimo
8,032,409	B1	10/2011	Mikurak
8,032,899	B2	10/2011	Archer et al.
8,036,387	B2	10/2011	Kudelski et al.
8,036,600	B2	10/2011	Garrett et al.
8,044,792	B2	10/2011	Orr et al.
8,045,973	B2	10/2011	Chambers
8,046,449	B2	10/2011	Yoshiuchi
8,050,275	B1	11/2011	Iyer
8,050,690	B2	11/2011	Neeraj
8,050,705	B2	11/2011	Sicher et al.
8,059,530	B1	11/2011	Cole
8,060,017	B2	11/2011	Schlicht et al.
8,060,463	B1	11/2011	Spiegel
8,060,603	B2	11/2011	Caunter et al.
8,064,418	B2	11/2011	Maki
8,064,896	B2	11/2011	Bell et al.
8,065,365	B2	11/2011	Saxena et al.
8,068,824	B2	11/2011	Shan et al.
8,068,829	B2	11/2011	Lemond et al.
8,073,427	B2	12/2011	Koch et al.
8,073,721	B1	12/2011	Lewis
8,078,140	B2	12/2011	Baker et al.
8,078,163	B2	12/2011	Lemond et al.
8,085,808	B2	12/2011	Brusca et al.
8,086,398	B2	12/2011	Sanchez et al.
8,086,497	B1	12/2011	Oakes, III
8,086,791	B2	12/2011	Caulkins
8,090,359	B2	1/2012	Proctor, Jr. et al.
8,090,361	B2	1/2012	Hagan
8,090,616	B2	1/2012	Proctor, Jr. et al.
8,091,087	B2	1/2012	Ali et al.
8,094,551	B2	1/2012	Huber et al.
8,095,112	B2	1/2012	Chow et al.
8,095,124	B2	1/2012	Balia
8,095,640	B2	1/2012	Guingo et al.
8,095,666	B2	1/2012	Schmidt et al.
8,098,579	B2	1/2012	Ray et al.
8,099,077	B2	1/2012	Chowdhury et al.
8,099,517	B2	1/2012	Jia et al.
8,102,814	B2	1/2012	Rahman et al.
8,103,285	B2	1/2012	Kalhan
8,104,080	B2	1/2012	Burns et al.

(56) **References Cited**

U.S. PATENT DOCUMENTS

8,107,953 B2 1/2012 Zimmerman et al.
8,108,520 B2 1/2012 Ruutu et al.
8,108,680 B2 1/2012 Murray
8,112,435 B2 2/2012 Epstein et al.
8,116,223 B2 2/2012 Tian et al.
8,116,749 B2 2/2012 Proctor, Jr. et al.
8,116,781 B2 2/2012 Chen et al.
8,122,128 B2 2/2012 Burke, II et al.
8,122,249 B2 2/2012 Falk et al.
8,125,897 B2 2/2012 Ray et al.
8,126,123 B2 2/2012 Cai et al.
8,126,396 B2 2/2012 Bennett
8,126,476 B2 2/2012 Vardi et al.
8,126,722 B2 2/2012 Robb et al.
8,130,793 B2 3/2012 Edwards et al.
8,131,256 B2 3/2012 Martti et al.
8,131,281 B1 3/2012 Hildner et al.
8,131,840 B1 3/2012 Denker
8,131,858 B2 3/2012 Agulnik et al.
8,132,256 B2 3/2012 Bari
8,134,954 B2 3/2012 Godfrey et al.
8,135,388 B1 3/2012 Gailloux et al.
8,135,392 B2 3/2012 Marcellino et al.
8,135,657 B2 3/2012 Kapoor et al.
8,140,690 B2 3/2012 Ly et al.
8,144,591 B2 3/2012 Ghai et al.
8,145,194 B2 3/2012 Yoshikawa et al.
8,146,142 B2 3/2012 Lortz et al.
8,149,748 B2 4/2012 Bata et al.
8,149,823 B2 4/2012 Turcan et al.
8,150,394 B2 4/2012 Bianconi et al.
8,150,431 B2 4/2012 Wolovitz et al.
8,151,205 B2 4/2012 Follmann et al.
8,155,155 B1 4/2012 Chow et al.
8,155,620 B2 4/2012 Wang et al.
8,155,666 B2 4/2012 Alizadeh-Shabdiz
8,155,670 B2 4/2012 Fullam et al.
8,156,206 B2 4/2012 Kiley et al.
8,159,520 B1 4/2012 Dhanoa et al.
8,160,015 B2 4/2012 Rashid et al.
8,160,056 B2 4/2012 Van der Merwe et al.
8,160,598 B2 4/2012 Savoor
8,165,576 B2 4/2012 Raju et al.
8,166,040 B2 4/2012 Brindisi et al.
8,166,554 B2 4/2012 John
8,170,553 B2 5/2012 Bennett
8,174,378 B2 5/2012 Richman et al.
8,174,970 B2 5/2012 Adamczyk et al.
8,175,574 B1 5/2012 Panda et al.
8,180,333 B1 5/2012 Wells et al.
8,180,881 B2 5/2012 Seo et al.
8,180,886 B2 5/2012 Overcash et al.
8,184,530 B1 5/2012 Swan et al.
8,184,590 B2 5/2012 Rosenblatt
8,185,088 B2 5/2012 Klein et al.
8,185,093 B2 5/2012 Jheng et al.
8,185,127 B1 5/2012 Cai et al.
8,185,152 B1 5/2012 Goldner
8,185,158 B2 5/2012 Tamura et al.
8,190,087 B2 5/2012 Fisher et al.
8,190,122 B1 5/2012 Alexander et al.
8,190,675 B2 5/2012 Tribbett
8,191,106 B2 5/2012 Choyi et al.
8,191,116 B1 5/2012 Gazzard
8,191,124 B2 5/2012 Wynn et al.
8,194,549 B2 6/2012 Huber et al.
8,194,553 B2 6/2012 Liang et al.
8,194,572 B2 6/2012 Horvath et al.
8,194,581 B1 6/2012 Schroeder et al.
8,195,093 B2 6/2012 Garrett et al.
8,195,153 B1 6/2012 Frencel et al.
8,195,163 B2 6/2012 Gisby et al.
8,195,661 B2 6/2012 Kalavade
8,196,199 B2 6/2012 Hrastar et al.
8,200,163 B2 6/2012 Hoffman
8,200,200 B1 6/2012 Belser et al.
8,200,509 B2 6/2012 Kenedy et al.
8,200,775 B2 6/2012 Moore
8,200,818 B2 6/2012 Freund et al.
8,204,190 B2 6/2012 Bang et al.
8,204,505 B2 6/2012 Jin et al.
8,208,788 B2 6/2012 Ando et al.
8,208,919 B2 6/2012 Kotecha
8,213,296 B2 7/2012 Shannon et al.
8,213,363 B2 7/2012 Ying et al.
8,214,536 B2 7/2012 Zhao
8,214,890 B2 7/2012 Kirovski et al.
8,219,134 B2 7/2012 Maharajh et al.
8,223,655 B2 7/2012 Heinz et al.
8,223,741 B1 7/2012 Bartlett et al.
8,224,382 B2 7/2012 Bultman
8,224,773 B2 7/2012 Spiegel
8,228,818 B2 7/2012 Chase et al.
8,229,394 B2 7/2012 Karlberg
8,229,914 B2 7/2012 Ramer et al.
8,233,433 B2 7/2012 Kalhan
8,233,883 B2 7/2012 De Froment
8,233,895 B2 7/2012 Tysowski
8,234,583 B2 7/2012 Sloo et al.
8,238,287 B1 8/2012 Gopi et al.
8,238,913 B1 8/2012 Bhattacharyya et al.
8,239,520 B2 8/2012 Grah
8,242,959 B2 8/2012 Mia et al.
8,244,241 B2 8/2012 Montemurro
8,249,601 B2 8/2012 Emberson et al.
8,254,880 B2 8/2012 Aaltonen et al.
8,254,915 B2 8/2012 Kozisek
8,255,515 B1 8/2012 Melman et al.
8,255,534 B2 8/2012 Assadzadeh
8,255,689 B2 8/2012 Kim et al.
8,259,692 B2 9/2012 Bajko
8,260,252 B2 9/2012 Agarwal
8,264,965 B2 9/2012 Dolganow et al.
8,265,004 B2 9/2012 Toutonghi
8,266,249 B2 9/2012 Hu
8,266,681 B2 9/2012 Deshpande et al.
8,270,955 B2 9/2012 Ramer et al.
8,270,972 B2 9/2012 Otting et al.
8,271,025 B2 9/2012 Brisebois et al.
8,271,045 B2 9/2012 Parolkar et al.
8,271,049 B2 9/2012 Silver et al.
8,271,992 B2 9/2012 Chatley et al.
8,275,415 B2 9/2012 Huslak
8,275,830 B2 9/2012 Raleigh
8,279,067 B2 10/2012 Berger et al.
8,279,864 B2 10/2012 Wood
8,280,354 B2 10/2012 Smith et al.
8,284,740 B2 10/2012 O'Connor
8,285,249 B2 10/2012 Baker et al.
8,285,992 B2 10/2012 Mathur et al.
8,290,820 B2 10/2012 Plastina et al.
8,291,238 B2 10/2012 Ginter et al.
8,291,439 B2 10/2012 Jethi et al.
8,296,404 B2 10/2012 McDysan et al.
8,300,575 B2 10/2012 Willars
8,306,518 B1 11/2012 Gailloux
8,306,741 B2 11/2012 Tu
8,307,067 B2 11/2012 Ryan
8,310,943 B2 11/2012 Mehta et al.
8,315,198 B2 11/2012 Corneille et al.
8,315,593 B2 11/2012 Gallant et al.
8,315,594 B1 11/2012 Mauser et al.
8,315,718 B2 11/2012 Caffrey et al.
8,315,999 B2 11/2012 Chatley et al.
8,320,244 B2 11/2012 Muqattash et al.
8,320,949 B2 11/2012 Matta
8,325,638 B2 12/2012 Jin et al.
8,325,906 B2 12/2012 Fullarton et al.
8,326,319 B2 12/2012 Davis
8,326,828 B2 12/2012 Zhou et al.
8,331,223 B2 12/2012 Hill et al.
8,331,293 B2 12/2012 Sood
8,332,375 B2 12/2012 Chatley et al.
8,339,991 B2 12/2012 Biswas et al.

(56) **References Cited**

U.S. PATENT DOCUMENTS

8,340,625	B1	12/2012	Johnson et al.
8,340,628	B2	12/2012	Taylor et al.
8,340,678	B1	12/2012	Pandey
8,340,718	B2	12/2012	Colonna et al.
8,346,210	B2	1/2013	Balsan et al.
8,346,225	B2	1/2013	Raleigh
8,346,923	B2	1/2013	Rowles et al.
8,347,104	B2	1/2013	Pathiyal
8,347,362	B2	1/2013	Cai et al.
8,347,378	B2	1/2013	Merkin et al.
8,350,700	B2	1/2013	Fast et al.
8,351,592	B2	1/2013	Freeny, Jr. et al.
8,351,898	B2	1/2013	Raleigh
8,352,360	B2	1/2013	De Judicibus et al.
8,352,980	B2	1/2013	Howcroft
8,353,001	B2	1/2013	Herrod
8,355,570	B2	1/2013	Karsanbhai et al.
8,355,696	B1	1/2013	Olding et al.
8,356,336	B2	1/2013	Johnston et al.
8,358,638	B2	1/2013	Scherzer et al.
8,358,975	B2	1/2013	Bahl et al.
8,363,658	B1	1/2013	Delker et al.
8,363,799	B2	1/2013	Gruchala et al.
8,364,089	B2	1/2013	Phillips
8,364,806	B2	1/2013	Short et al.
8,369,274	B2	2/2013	Sawai
8,370,477	B2	2/2013	Short et al.
8,370,483	B2	2/2013	Choong et al.
8,374,090	B2	2/2013	Morrill et al.
8,374,592	B2	2/2013	Proctor, Jr. et al.
8,375,128	B2	2/2013	Tofighbakhsh et al.
8,375,136	B2	2/2013	Roman et al.
8,380,247	B2	2/2013	Engstrom
8,385,199	B1	2/2013	Coward et al.
8,385,896	B2	2/2013	Proctor, Jr. et al.
8,385,964	B2	2/2013	Haney
8,385,975	B2	2/2013	Forutanpour et al.
8,386,386	B1	2/2013	Zhu
8,391,262	B2	3/2013	Maki et al.
8,391,834	B2	3/2013	Raleigh
8,392,982	B2	3/2013	Harris et al.
8,396,458	B2	3/2013	Raleigh
8,396,929	B2	3/2013	Helfman et al.
8,401,968	B1	3/2013	Schattauer et al.
8,402,165	B2	3/2013	Deu-Ngoc et al.
8,402,540	B2	3/2013	Kapoor et al.
8,406,427	B2	3/2013	Chand et al.
8,406,736	B2	3/2013	Das et al.
8,407,763	B2	3/2013	Weller et al.
8,411,587	B2	4/2013	Curtis et al.
8,411,691	B2	4/2013	Aggarwal
8,412,798	B1	4/2013	Wang
8,413,245	B2	4/2013	Kraemer et al.
8,418,168	B2	4/2013	Tyhurst et al.
8,422,988	B1	4/2013	Keshav
8,423,016	B2	4/2013	Buckley et al.
8,429,403	B2	4/2013	Moret et al.
8,437,734	B2	5/2013	Ray et al.
8,442,015	B2	5/2013	Behzad et al.
8,446,831	B2	5/2013	Kwan et al.
8,447,324	B2	5/2013	Shuman et al.
8,447,607	B2	5/2013	Weider et al.
8,447,980	B2	5/2013	Godfrey et al.
8,448,015	B2	5/2013	Gerhart
8,452,858	B2	5/2013	Wu et al.
8,457,603	B2	6/2013	El-Kadri et al.
8,461,958	B2	6/2013	Saenz et al.
8,463,194	B2	6/2013	Erlenback et al.
8,463,232	B2	6/2013	Tuli et al.
8,468,337	B2	6/2013	Gaur et al.
8,472,371	B1	6/2013	Bari et al.
8,477,778	B2	7/2013	Lehmann, Jr. et al.
8,478,840	B2	7/2013	Skutela et al.
8,483,057	B2	7/2013	Cuervo
8,483,135	B2	7/2013	Cai et al.
8,483,694	B2	7/2013	Lewis et al.
8,484,327	B2	7/2013	Werner et al.
8,488,597	B2	7/2013	Nie et al.
8,489,110	B2	7/2013	Frank et al.
8,489,720	B1	7/2013	Morford et al.
8,494,559	B1	7/2013	Malmi
8,495,181	B2	7/2013	Venkatraman et al.
8,495,207	B2	7/2013	Lee
8,495,227	B2	7/2013	Kaminsky et al.
8,495,360	B2	7/2013	Falk et al.
8,495,700	B2	7/2013	Shahbazi
8,495,743	B2	7/2013	Kraemer et al.
8,499,087	B2	7/2013	Hu
RE44,412	E	8/2013	Naqvi et al.
8,500,533	B2	8/2013	Lutnick et al.
8,503,358	B2	8/2013	Hanson et al.
8,503,455	B2	8/2013	Heikens
8,504,032	B2	8/2013	Lott et al.
8,504,574	B2	8/2013	Dvorak et al.
8,504,687	B2	8/2013	Maffione et al.
8,504,690	B2	8/2013	Shah et al.
8,504,729	B2	8/2013	Pezzutti
8,505,073	B2	8/2013	Taglienti et al.
8,509,082	B2	8/2013	Heinz et al.
8,514,927	B2	8/2013	Sundararajan et al.
8,516,552	B2	8/2013	Raleigh
8,520,589	B2	8/2013	Bhatt et al.
8,520,595	B2	8/2013	Yadav et al.
8,521,110	B2	8/2013	Rofougaran
8,521,775	B1	8/2013	Poh et al.
8,522,039	B2	8/2013	Hyndman et al.
8,522,249	B2	8/2013	Beaule
8,522,337	B2	8/2013	Adusumilli et al.
8,523,547	B2	9/2013	Pekrul
8,526,329	B2	9/2013	Mahany et al.
8,526,350	B2	9/2013	Xue et al.
8,527,013	B2	9/2013	Guba et al.
8,527,410	B2	9/2013	Markki et al.
8,527,662	B2	9/2013	Biswas et al.
8,528,068	B1	9/2013	Weglein et al.
8,531,954	B2	9/2013	McNaughton et al.
8,531,995	B2	9/2013	Khan et al.
8,532,610	B2	9/2013	Manning Cassett et al.
8,533,775	B2	9/2013	Alcorn et al.
8,535,160	B2	9/2013	Lutnick et al.
8,538,394	B2	9/2013	Zimmerman et al.
8,538,421	B2	9/2013	Brisebois et al.
8,538,458	B2	9/2013	Haney
8,539,544	B2	9/2013	Garimella et al.
8,543,265	B2	9/2013	Ekhaguere et al.
8,543,814	B2	9/2013	Laitinen et al.
8,544,105	B2	9/2013	Mclean et al.
8,548,427	B2	10/2013	Chow et al.
8,549,173	B1	10/2013	Wu et al.
8,554,876	B2	10/2013	Winsor
8,559,369	B2	10/2013	Barkan
8,561,138	B2	10/2013	Rothman et al.
8,565,746	B2	10/2013	Hoffman
8,566,236	B2	10/2013	Busch
8,571,474	B2	10/2013	Chavez et al.
8,571,501	B2	10/2013	Miller et al.
8,571,598	B2	10/2013	Valavi
8,571,993	B2	10/2013	Kocher et al.
8,572,117	B2	10/2013	Rappaport
8,572,256	B2	10/2013	Babbar
8,583,499	B2	11/2013	De Judicibus et al.
8,588,240	B2	11/2013	Ramankutty et al.
8,589,955	B2	11/2013	Roundtree et al.
8,594,665	B2	11/2013	Anschutz
8,595,186	B1	11/2013	Mandyam et al.
8,600,895	B2	12/2013	Felsher
8,601,125	B2	12/2013	Huang et al.
8,605,691	B2	12/2013	Soomro et al.
8,615,507	B2	12/2013	Varadarajulu et al.
8,619,735	B2	12/2013	Montemurro et al.
8,620,257	B2	12/2013	Qiu et al.
8,630,630	B2	1/2014	Raleigh
8,630,925	B2	1/2014	Bystrom et al.
8,631,428	B2	1/2014	Scott et al.

(56) **References Cited**

U.S. PATENT DOCUMENTS

8,634,425	B2	1/2014	Gorti et al.
8,635,164	B2	1/2014	Rosenhaft et al.
8,639,215	B2	1/2014	McGregor et al.
8,644,702	B1	2/2014	Kalajan
8,644,813	B1	2/2014	Gailloux et al.
8,645,518	B2	2/2014	David
8,655,357	B1	2/2014	Gazzard et al.
8,656,472	B2	2/2014	McMurtry et al.
8,660,853	B2	2/2014	Robb et al.
8,666,395	B2	3/2014	Silver
8,667,542	B1	3/2014	Bertz et al.
8,670,334	B2	3/2014	Keohane et al.
8,675,852	B2	3/2014	Maes
8,676,682	B2	3/2014	Kalliola
8,676,925	B1	3/2014	Liu et al.
8,693,323	B1	4/2014	McDysan
8,694,772	B2	4/2014	Kao et al.
8,700,729	B2	4/2014	Dua
8,701,015	B2	4/2014	Bonnat
8,705,361	B2	4/2014	Venkataraman et al.
8,706,863	B2	4/2014	Fadell
8,713,535	B2	4/2014	Malhotra et al.
8,713,641	B1	4/2014	Pagan et al.
8,719,397	B2	5/2014	Levi et al.
8,719,423	B2	5/2014	Wyld
8,724,486	B2	5/2014	Seto et al.
8,725,899	B2	5/2014	Short et al.
8,730,842	B2	5/2014	Collins et al.
8,731,519	B2	5/2014	Flynn et al.
8,732,808	B2	5/2014	Sewall et al.
8,739,035	B2	5/2014	Trethewey
8,744,339	B2	6/2014	Halfmann et al.
8,761,711	B2	6/2014	Grignani et al.
8,780,857	B2	7/2014	Balasubramanian et al.
8,787,249	B2	7/2014	Giaretta et al.
8,792,857	B2	7/2014	Cai et al.
8,793,304	B2	7/2014	Lu et al.
8,798,610	B2	8/2014	Prakash et al.
8,799,440	B2	8/2014	Zhou et al.
8,804,695	B2	8/2014	Branam
8,811,338	B2	8/2014	Jin et al.
8,811,991	B2	8/2014	Jain et al.
8,818,394	B2	8/2014	Bienas et al.
8,819,253	B2	8/2014	Simeloff et al.
8,825,109	B2	9/2014	Montemurro et al.
8,826,411	B2	9/2014	Moen et al.
8,831,561	B2	9/2014	Sutaria et al.
8,838,752	B2	9/2014	Lor et al.
8,843,849	B2	9/2014	Neil et al.
8,845,415	B2	9/2014	Lutnick et al.
8,849,297	B2	9/2014	Balasubramanian
8,855,620	B2	10/2014	Sievers et al.
8,862,751	B2	10/2014	Faccin et al.
8,863,111	B2	10/2014	Selitser et al.
8,875,042	B2	10/2014	LeJeune et al.
8,880,047	B2	11/2014	Konicek et al.
8,891,483	B2	11/2014	Connelly et al.
8,898,748	B2	11/2014	Burks et al.
8,908,516	B2	12/2014	Tzamaloukas et al.
8,929,374	B2	1/2015	Tönsing et al.
8,930,238	B2	1/2015	Coffman et al.
8,930,551	B2	1/2015	Pandya et al.
8,943,551	B2	1/2015	Ganapathy et al.
8,948,726	B2	2/2015	Smith et al.
8,949,382	B2	2/2015	Cornett et al.
8,949,597	B1	2/2015	Reeves et al.
8,955,038	B2	2/2015	Nicodemus et al.
8,966,018	B2	2/2015	Bugwadia et al.
8,971,912	B2	3/2015	Chou et al.
8,977,284	B2	3/2015	Reed
8,995,952	B1	3/2015	Baker et al.
9,002,342	B2	4/2015	Tenhunen et al.
9,014,973	B2	4/2015	Ruckart
9,015,331	B2	4/2015	Lai et al.
9,026,100	B2	5/2015	Castro et al.
9,030,934	B2	5/2015	Shah et al.
9,049,010	B2	6/2015	Jueneman et al.
9,064,275	B1	6/2015	Lu et al.
9,105,031	B2	8/2015	Shen et al.
9,111,088	B2	8/2015	Ghai et al.
9,137,286	B1	9/2015	Yuan
9,172,553	B2	10/2015	Dawes et al.
9,177,455	B2	11/2015	Remer
9,204,282	B2	12/2015	Raleigh
9,282,460	B2	3/2016	Souissi
9,286,469	B2	3/2016	Kraemer et al.
9,286,604	B2	3/2016	Aabye et al.
9,313,708	B2	4/2016	Nam et al.
9,325,737	B2	4/2016	Gutowski et al.
9,326,173	B2	4/2016	Luft
9,344,557	B2	5/2016	Gruchala et al.
9,363,285	B2	6/2016	Kitamura
9,367,680	B2	6/2016	Mahaffey et al.
9,413,546	B2	8/2016	Meier et al.
9,418,381	B2	8/2016	Ahuja et al.
9,459,767	B2	10/2016	Cockcroft et al.
9,501,803	B2	11/2016	Bilac et al.
9,544,397	B2	1/2017	Raleigh et al.
9,589,117	B2	3/2017	Ali et al.
9,609,459	B2	3/2017	Raleigh
9,712,476	B2	7/2017	Boynton et al.
9,942,796	B2	4/2018	Raleigh
9,986,413	B2	5/2018	Raleigh
10,021,251	B2	7/2018	Aaron et al.
10,285,025	B1	5/2019	Baker et al.
10,326,800	B2	6/2019	Raleigh et al.
10,492,102	B2	11/2019	Raleigh et al.
10,582,375	B2	3/2020	Raleigh
2001/0048738	A1	12/2001	Baniak et al.
2001/0053694	A1	12/2001	Igarashi et al.
2002/0013844	A1	1/2002	Garrett et al.
2002/0022472	A1	2/2002	Watler et al.
2002/0022483	A1	2/2002	Thompson et al.
2002/0049074	A1	4/2002	Eisinger et al.
2002/0099848	A1	7/2002	Lee
2002/0116338	A1	8/2002	Gonthier et al.
2002/0120370	A1	8/2002	Parupudi et al.
2002/0120540	A1	8/2002	Kende et al.
2002/0131404	A1	9/2002	Mehta et al.
2002/0138599	A1	9/2002	Dilman et al.
2002/0138601	A1	9/2002	Piponius et al.
2002/0154751	A1	10/2002	Thompson et al.
2002/0161601	A1	10/2002	Nauer et al.
2002/0164983	A1	11/2002	Raviv et al.
2002/0176377	A1	11/2002	Hamilton
2002/0188732	A1	12/2002	Buckman et al.
2002/0191573	A1	12/2002	Whitehill et al.
2002/0199001	A1	12/2002	Wenocur et al.
2003/0004937	A1	1/2003	Salmenkaita et al.
2003/0005112	A1	1/2003	Krautkremer
2003/0013434	A1	1/2003	Rosenberg et al.
2003/0018524	A1	1/2003	Fishman et al.
2003/0028623	A1	2/2003	Hennessey et al.
2003/0046396	A1	3/2003	Richter et al.
2003/0050070	A1	3/2003	Mashinsky et al.
2003/0050837	A1	3/2003	Kim
2003/0084321	A1	5/2003	Tarquini et al.
2003/0088671	A1	5/2003	Klinker et al.
2003/0133408	A1	7/2003	Cheng et al.
2003/0134650	A1	7/2003	Sundar et al.
2003/0159030	A1	8/2003	Evans
2003/0161265	A1	8/2003	Cao et al.
2003/0171112	A1	9/2003	Lupper et al.
2003/0182420	A1	9/2003	Jones et al.
2003/0182435	A1	9/2003	Redlich et al.
2003/0184793	A1	10/2003	Pineau
2003/0188006	A1	10/2003	Bard
2003/0188117	A1	10/2003	Yoshino et al.
2003/0220984	A1	11/2003	Jones et al.
2003/0224781	A1	12/2003	Milford et al.
2003/0229900	A1	12/2003	Reisman
2003/0233332	A1	12/2003	Keeler et al.
2003/0236745	A1	12/2003	Hartsell et al.
2004/0019539	A1	1/2004	Raman et al.

(56) **References Cited**

U.S. PATENT DOCUMENTS

2004/0019564	A1	1/2004	Goldthwaite et al.
2004/0021697	A1	2/2004	Beaton et al.
2004/0024756	A1	2/2004	Rickard
2004/0030705	A1	2/2004	Bowman-Amuah
2004/0039792	A1	2/2004	Nakanishi
2004/0044623	A1	3/2004	Wake et al.
2004/0047358	A1	3/2004	Chen et al.
2004/0054779	A1	3/2004	Takeshima et al.
2004/0073672	A1	4/2004	Fascenda
2004/0082346	A1	4/2004	Skytt et al.
2004/0098715	A1	5/2004	Aghera et al.
2004/0102182	A1	5/2004	Reith et al.
2004/0103193	A1	5/2004	Pandya et al.
2004/0107360	A1	6/2004	Herrmann et al.
2004/0116140	A1	6/2004	Babbar et al.
2004/0127200	A1	7/2004	Shaw et al.
2004/0127208	A1	7/2004	Nair et al.
2004/0127256	A1	7/2004	Goldthwaite et al.
2004/0132427	A1	7/2004	Lee et al.
2004/0133668	A1	7/2004	Nicholas, III
2004/0137890	A1	7/2004	Kalke
2004/0165596	A1	8/2004	Garcia et al.
2004/0167958	A1	8/2004	Stewart et al.
2004/0168052	A1	8/2004	Clisham et al.
2004/0170191	A1	9/2004	Guo et al.
2004/0176104	A1	9/2004	Arcens
2004/0198331	A1	10/2004	Coward et al.
2004/0203755	A1	10/2004	Brunet et al.
2004/0203833	A1	10/2004	Rathunde et al.
2004/0225561	A1	11/2004	Hertzberg et al.
2004/0225898	A1	11/2004	Frost et al.
2004/0236547	A1	11/2004	Rappaport et al.
2004/0243680	A1	12/2004	Mayer
2004/0243992	A1	12/2004	Gustafson et al.
2004/0249918	A1	12/2004	Sunshine
2004/0255145	A1	12/2004	Chow
2004/0259534	A1	12/2004	Chaudhari et al.
2004/0260766	A1	12/2004	Barros et al.
2004/0267872	A1	12/2004	Serdy et al.
2005/0007993	A1	1/2005	Chambers et al.
2005/0009499	A1	1/2005	Koster
2005/0021995	A1	1/2005	Lal et al.
2005/0041617	A1	2/2005	Huotari et al.
2005/0048950	A1	3/2005	Morper
2005/0055291	A1	3/2005	Bevente et al.
2005/0055309	A1	3/2005	Williams et al.
2005/0055595	A1	3/2005	Frazer et al.
2005/0060266	A1	3/2005	Demello et al.
2005/0060525	A1	3/2005	Schwartz et al.
2005/0075115	A1	4/2005	Corneille et al.
2005/0079863	A1	4/2005	Macaluso
2005/0091505	A1	4/2005	Riley et al.
2005/0096024	A1	5/2005	Bicker et al.
2005/0097516	A1	5/2005	Donnelly et al.
2005/0107091	A1	5/2005	Vannithamby et al.
2005/0108075	A1	5/2005	Douglis et al.
2005/0111463	A1	5/2005	Leung et al.
2005/0128967	A1	6/2005	Scobbie
2005/0135264	A1	6/2005	Popoff et al.
2005/0163320	A1	7/2005	Brown et al.
2005/0166043	A1	7/2005	Zhang et al.
2005/0183143	A1	8/2005	Anderholm et al.
2005/0186948	A1	8/2005	Gallagher et al.
2005/0198377	A1	9/2005	Ferguson et al.
2005/0216421	A1	9/2005	Barry et al.
2005/0228985	A1	10/2005	Ylikoski et al.
2005/0238046	A1	10/2005	Hassan et al.
2005/0239447	A1	10/2005	Holzman et al.
2005/0245241	A1	11/2005	Durand et al.
2005/0246282	A1	11/2005	Naslund et al.
2005/0250508	A1	11/2005	Guo et al.
2005/0250536	A1	11/2005	Deng et al.
2005/0254435	A1	11/2005	Moakley et al.
2005/0266825	A1	12/2005	Clayton
2005/0266880	A1	12/2005	Gupta
2006/0014519	A1	1/2006	Marsh et al.
2006/0019632	A1	1/2006	Cunningham et al.
2006/0020787	A1	1/2006	Choyi et al.
2006/0026679	A1	2/2006	Zakas
2006/0030306	A1	2/2006	Kuhn
2006/0034256	A1	2/2006	Addagatla et al.
2006/0035631	A1	2/2006	White et al.
2006/0040642	A1	2/2006	Boris et al.
2006/0045245	A1	3/2006	Aaron et al.
2006/0048223	A1	3/2006	Lee et al.
2006/0068796	A1	3/2006	Millen et al.
2006/0072451	A1	4/2006	Ross
2006/0072550	A1	4/2006	Davis et al.
2006/0072646	A1	4/2006	Feher
2006/0075506	A1	4/2006	Sanda et al.
2006/0085543	A1	4/2006	Hrastar et al.
2006/0095517	A1	5/2006	O'Connor et al.
2006/0098627	A1	5/2006	Karaoguz et al.
2006/0099970	A1	5/2006	Morgan et al.
2006/0101507	A1	5/2006	Camenisch
2006/0112016	A1	5/2006	Ishibashi
2006/0114821	A1	6/2006	Willey et al.
2006/0114832	A1	6/2006	Hamilton et al.
2006/0126562	A1	6/2006	Liu
2006/0135144	A1	6/2006	Jothipragasam
2006/0136882	A1	6/2006	Noonan et al.
2006/0143066	A1	6/2006	Calabria
2006/0143098	A1	6/2006	Lazaridis
2006/0156398	A1	7/2006	Ross et al.
2006/0160536	A1	7/2006	Chou
2006/0165060	A1	7/2006	Dua
2006/0168128	A1	7/2006	Sistla et al.
2006/0173959	A1	8/2006	Mckelvie et al.
2006/0174035	A1	8/2006	Tufail
2006/0178917	A1	8/2006	Merriam et al.
2006/0178918	A1	8/2006	Mikurak
2006/0182137	A1	8/2006	Zhou et al.
2006/0183462	A1	8/2006	Kolehmainen
2006/0190314	A1	8/2006	Hernandez
2006/0190987	A1	8/2006	Ohta et al.
2006/0193280	A1	8/2006	Lee et al.
2006/0199608	A1	9/2006	Dunn et al.
2006/0200663	A1	9/2006	Thornton
2006/0206709	A1	9/2006	Labrou et al.
2006/0206904	A1	9/2006	Watkins et al.
2006/0218395	A1	9/2006	Maes
2006/0233108	A1	10/2006	Krishnan
2006/0233166	A1	10/2006	Bou-Diab et al.
2006/0236095	A1	10/2006	Smith et al.
2006/0242685	A1	10/2006	Heard et al.
2006/0258341	A1	11/2006	Miller et al.
2006/0274706	A1	12/2006	Chen et al.
2006/0277590	A1	12/2006	Limont et al.
2006/0291419	A1	12/2006	McConnell et al.
2006/0291477	A1	12/2006	Croak et al.
2007/0005795	A1	1/2007	Gonzalez
2007/0019670	A1	1/2007	Falardeau
2007/0022289	A1	1/2007	Alt et al.
2007/0025301	A1	2/2007	Petersson et al.
2007/0033194	A1	2/2007	Srinivas et al.
2007/0033197	A1	2/2007	Scherzer et al.
2007/0035390	A1	2/2007	Thomas et al.
2007/0036312	A1	2/2007	Cai et al.
2007/0055694	A1	3/2007	Ruge et al.
2007/0060200	A1	3/2007	Boris et al.
2007/0061243	A1	3/2007	Ramer et al.
2007/0061800	A1	3/2007	Cheng et al.
2007/0061878	A1	3/2007	Hagiu et al.
2007/0073899	A1	3/2007	Judge et al.
2007/0076616	A1	4/2007	Ngo et al.
2007/0093243	A1	4/2007	Kapadekar et al.
2007/0100981	A1	5/2007	Adamczyk et al.
2007/0101426	A1	5/2007	Lee et al.
2007/0104126	A1	5/2007	Calhoun et al.
2007/0104169	A1	5/2007	Polson
2007/0109983	A1	5/2007	Shankar et al.
2007/0111740	A1	5/2007	Wandel
2007/0130283	A1	6/2007	Klein et al.
2007/0130315	A1	6/2007	Friend et al.

(56) **References Cited**

U.S. PATENT DOCUMENTS

2007/0140113 A1 6/2007 Gemelos
2007/0140145 A1 6/2007 Kumar et al.
2007/0140275 A1 6/2007 Bowman et al.
2007/0143824 A1 6/2007 Shahbazi
2007/0147317 A1 6/2007 Smith et al.
2007/0147324 A1 6/2007 McGary
2007/0155365 A1 7/2007 Kim et al.
2007/0165630 A1 7/2007 Rasanen et al.
2007/0168499 A1 7/2007 Chu
2007/0171856 A1 7/2007 Bruce et al.
2007/0174490 A1 7/2007 Choi et al.
2007/0191006 A1 8/2007 Carpenter
2007/0192460 A1 8/2007 Choi et al.
2007/0198656 A1 8/2007 Mazzaferri et al.
2007/0201502 A1 8/2007 Abramson
2007/0213054 A1 9/2007 Han
2007/0220251 A1 9/2007 Rosenberg et al.
2007/0226225 A1 9/2007 Yiu et al.
2007/0226775 A1 9/2007 Andreasen et al.
2007/0234402 A1 10/2007 Khosravi et al.
2007/0243862 A1 10/2007 Coskun et al.
2007/0248100 A1 10/2007 Zuberi et al.
2007/0254646 A1 11/2007 Sokondar
2007/0254675 A1 11/2007 Zorlu Ozer et al.
2007/0255769 A1 11/2007 Agrawal et al.
2007/0255797 A1 11/2007 Dunn et al.
2007/0255848 A1 11/2007 Sewall et al.
2007/0257767 A1 11/2007 Beeson
2007/0259656 A1 11/2007 Jeong
2007/0259673 A1 11/2007 Willars et al.
2007/0263558 A1 11/2007 Salomone
2007/0266422 A1 11/2007 Germano et al.
2007/0274327 A1 11/2007 Kaarela et al.
2007/0280453 A1 12/2007 Kelley
2007/0282896 A1 12/2007 Wydroug et al.
2007/0293191 A1 12/2007 Mir et al.
2007/0294395 A1 12/2007 Strub et al.
2007/0294410 A1 12/2007 Pandya et al.
2007/0297378 A1 12/2007 Poyhonen et al.
2007/0298764 A1 12/2007 Clayton
2007/0299965 A1 12/2007 Nieh et al.
2007/0300252 A1 12/2007 Acharya et al.
2008/0005285 A1 1/2008 Robinson et al.
2008/0005561 A1 1/2008 Brown et al.
2008/0010379 A1 1/2008 Zhao
2008/0010452 A1 1/2008 Holtzman et al.
2008/0018494 A1 1/2008 Waite et al.
2008/0022354 A1 1/2008 Grewal et al.
2008/0025230 A1 1/2008 Patel et al.
2008/0032715 A1 2/2008 Jia et al.
2008/0034063 A1 2/2008 Yee
2008/0034419 A1 2/2008 Mullick et al.
2008/0039102 A1 2/2008 Sewall et al.
2008/0049630 A1 2/2008 Kozisek et al.
2008/0050715 A1 2/2008 Golczewski et al.
2008/0051076 A1 2/2008 O'Shaughnessy et al.
2008/0052387 A1 2/2008 Heinz et al.
2008/0056273 A1 3/2008 Pelletier et al.
2008/0059474 A1 3/2008 Lim
2008/0059743 A1 3/2008 Bychkov et al.
2008/0060066 A1 3/2008 Wynn et al.
2008/0062900 A1 3/2008 Rao
2008/0064367 A1 3/2008 Nath et al.
2008/0066149 A1 3/2008 Lim
2008/0066150 A1 3/2008 Lim
2008/0066181 A1 3/2008 Haveson et al.
2008/0070550 A1 3/2008 Hose
2008/0077705 A1 3/2008 Li et al.
2008/0080457 A1 4/2008 Cole
2008/0081606 A1 4/2008 Cole
2008/0082643 A1 4/2008 Storrie et al.
2008/0083013 A1 4/2008 Soliman et al.
2008/0085707 A1 4/2008 Fadell
2008/0089295 A1 4/2008 Keeler et al.
2008/0089303 A1 4/2008 Wirtanen et al.
2008/0095339 A1 4/2008 Elliott et al.
2008/0096559 A1 4/2008 Phillips et al.
2008/0098062 A1 4/2008 Balia
2008/0109679 A1 5/2008 Wright et al.
2008/0120129 A1 5/2008 Seubert et al.
2008/0120174 A1 5/2008 Li
2008/0120668 A1 5/2008 Yau
2008/0120688 A1 5/2008 Qiu et al.
2008/0125079 A1 5/2008 O'Neil et al.
2008/0126287 A1 5/2008 Cox et al.
2008/0127304 A1 5/2008 Ginter et al.
2008/0130534 A1 6/2008 Tomioka
2008/0130656 A1 6/2008 Kim et al.
2008/0132201 A1 6/2008 Karlberg
2008/0132268 A1 6/2008 Choi-Grogan et al.
2008/0134330 A1 6/2008 Kapoor et al.
2008/0139210 A1 6/2008 Gisby et al.
2008/0147454 A1 6/2008 Walker et al.
2008/0160958 A1 7/2008 Abichandani et al.
2008/0162637 A1 7/2008 Adamczyk et al.
2008/0162704 A1 7/2008 Poplett et al.
2008/0164304 A1 7/2008 Narasimhan et al.
2008/0166993 A1 7/2008 Gautier et al.
2008/0167027 A1 7/2008 Gautier et al.
2008/0167033 A1 7/2008 Beckers
2008/0168275 A1 7/2008 DeAtley et al.
2008/0168523 A1 7/2008 Ansari et al.
2008/0177998 A1 7/2008 Apsangi et al.
2008/0178300 A1 7/2008 Brown et al.
2008/0181117 A1 7/2008 Acke et al.
2008/0183812 A1 7/2008 Paul et al.
2008/0184127 A1 7/2008 Rafey et al.
2008/0189760 A1 8/2008 Rosenberg et al.
2008/0201266 A1 8/2008 Chua et al.
2008/0207167 A1 8/2008 Bugenhagen
2008/0212470 A1 9/2008 Castaneda et al.
2008/0212751 A1 9/2008 Chung
2008/0219268 A1 9/2008 Dennison
2008/0221951 A1 9/2008 Forth et al.
2008/0222692 A1 9/2008 Andersson et al.
2008/0225748 A1 9/2008 Khemani et al.
2008/0229385 A1 9/2008 Feder et al.
2008/0229388 A1 9/2008 Maes
2008/0235511 A1 9/2008 O'Brien et al.
2008/0240373 A1 10/2008 Wilhelm
2008/0250053 A1 10/2008 Aaltonen et al.
2008/0256593 A1 10/2008 Vinberg et al.
2008/0259924 A1 10/2008 Gooch et al.
2008/0262798 A1 10/2008 Kim et al.
2008/0263348 A1 10/2008 Zaltsman et al.
2008/0268813 A1 10/2008 Maes
2008/0270212 A1 10/2008 Blight et al.
2008/0279216 A1 11/2008 Sharif-Ahmadi et al.
2008/0282319 A1 11/2008 Fontijn et al.
2008/0291872 A1 11/2008 Henriksson
2008/0293395 A1 11/2008 Mathews et al.
2008/0298230 A1 12/2008 Luft et al.
2008/0305793 A1 12/2008 Gallagher et al.
2008/0311885 A1 12/2008 Dawson et al.
2008/0313315 A1 12/2008 Karaoguz et al.
2008/0313730 A1 12/2008 Iftimie et al.
2008/0316923 A1 12/2008 Fedders et al.
2008/0318547 A1 12/2008 Ballou et al.
2008/0318550 A1 12/2008 DeAtley
2008/0319879 A1 12/2008 Carroll et al.
2008/0320497 A1 12/2008 Tarkoma et al.
2009/0005000 A1 1/2009 Baker et al.
2009/0005005 A1 1/2009 Forstall et al.
2009/0006116 A1 1/2009 Baker et al.
2009/0006200 A1 1/2009 Baker et al.
2009/0006229 A1 1/2009 Sweeney et al.
2009/0013157 A1 1/2009 Beaule
2009/0016310 A1 1/2009 Rasal
2009/0017809 A1 1/2009 Jethi et al.
2009/0036111 A1 2/2009 Danford et al.
2009/0042536 A1 2/2009 Bernard et al.
2009/0044185 A1 2/2009 Krivopaltsev
2009/0046707 A1 2/2009 Smires et al.
2009/0046723 A1 2/2009 Rahman et al.

(56) **References Cited**

U.S. PATENT DOCUMENTS

2009/0047989	A1	2/2009	Harmon et al.
2009/0048913	A1	2/2009	Shenfield et al.
2009/0049156	A1	2/2009	Aronsson et al.
2009/0049518	A1	2/2009	Roman et al.
2009/0054030	A1	2/2009	Golds
2009/0065571	A1	3/2009	Jain
2009/0067372	A1	3/2009	Shah et al.
2009/0068984	A1	3/2009	Burnett
2009/0070379	A1	3/2009	Rappaport
2009/0077622	A1	3/2009	Baum et al.
2009/0079699	A1	3/2009	Sun
2009/0113514	A1	4/2009	Hu
2009/0125619	A1	5/2009	Antani
2009/0132860	A1	5/2009	Liu et al.
2009/0149154	A1	6/2009	Bhasin et al.
2009/0157792	A1	6/2009	Fiatal
2009/0163173	A1	6/2009	Williams
2009/0172077	A1	7/2009	Roxburgh et al.
2009/0180391	A1	7/2009	Petersen et al.
2009/0181662	A1	7/2009	Fleischman et al.
2009/0197585	A1	8/2009	Aaron
2009/0197612	A1	8/2009	Kiiskinen
2009/0203352	A1	8/2009	Fordon et al.
2009/0217065	A1	8/2009	Araujo, Jr.
2009/0217364	A1	8/2009	Salmela et al.
2009/0219170	A1	9/2009	Clark et al.
2009/0248883	A1	10/2009	Suryanarayana et al.
2009/0254857	A1	10/2009	Romine et al.
2009/0257379	A1	10/2009	Robinson et al.
2009/0262715	A1	10/2009	Juang
2009/0271514	A1	10/2009	Thomas et al.
2009/0282127	A1	11/2009	Leblanc et al.
2009/0286507	A1	11/2009	O'Neil et al.
2009/0287921	A1	11/2009	Zhu et al.
2009/0288140	A1	11/2009	Huber et al.
2009/0291665	A1	11/2009	Gaskarth et al.
2009/0299857	A1	12/2009	Brubaker
2009/0307696	A1	12/2009	Vals et al.
2009/0307746	A1	12/2009	Di et al.
2009/0315735	A1	12/2009	Bhavani et al.
2009/0320110	A1	12/2009	Nicolson et al.
2010/0017506	A1	1/2010	Fadell
2010/0020822	A1	1/2010	Zerillo et al.
2010/0027469	A1	2/2010	Gurajala et al.
2010/0027559	A1	2/2010	Lin et al.
2010/0030890	A1	2/2010	Dutta et al.
2010/0041364	A1	2/2010	Lott et al.
2010/0041365	A1	2/2010	Lott et al.
2010/0041391	A1	2/2010	Spivey et al.
2010/0042675	A1	2/2010	Fujii
2010/0043068	A1	2/2010	Varadhan et al.
2010/0069074	A1	3/2010	Kodialam et al.
2010/0071053	A1	3/2010	Ansari et al.
2010/0075666	A1	3/2010	Garner
2010/0077035	A1	3/2010	Li et al.
2010/0080202	A1	4/2010	Hanson
2010/0082431	A1	4/2010	Ramer et al.
2010/0088387	A1	4/2010	Calamera
2010/0103820	A1	4/2010	Fuller et al.
2010/0113020	A1	5/2010	Subramanian et al.
2010/0121744	A1	5/2010	Belz et al.
2010/0131584	A1	5/2010	Johnson
2010/0142478	A1	6/2010	Forssell et al.
2010/0144310	A1	6/2010	Bedingfield
2010/0151866	A1	6/2010	Karpov et al.
2010/0153781	A1	6/2010	Hanna
2010/0167696	A1	7/2010	Smith et al.
2010/0188975	A1	7/2010	Raleigh
2010/0188990	A1	7/2010	Raleigh
2010/0188992	A1	7/2010	Raleigh
2010/0188994	A1	7/2010	Raleigh
2010/0190469	A1	7/2010	Vanderveen et al.
2010/0191576	A1	7/2010	Raleigh
2010/0191612	A1	7/2010	Raleigh
2010/0191846	A1	7/2010	Raleigh
2010/0192170	A1	7/2010	Raleigh
2010/0192212	A1	7/2010	Raleigh
2010/0195503	A1	8/2010	Raleigh
2010/0197268	A1	8/2010	Raleigh
2010/0198698	A1	8/2010	Raleigh et al.
2010/0198939	A1	8/2010	Raleigh
2010/0235329	A1	9/2010	Koren et al.
2010/0241544	A1	9/2010	Benson et al.
2010/0248719	A1	9/2010	Scholaert
2010/0284327	A1	11/2010	Miklos
2010/0284388	A1	11/2010	Fantini et al.
2010/0287599	A1	11/2010	He et al.
2010/0311402	A1	12/2010	Srinivasan et al.
2010/0325420	A1	12/2010	Kanekar
2011/0004917	A1	1/2011	Saisa et al.
2011/0013569	A1	1/2011	Scherzer et al.
2011/0019574	A1	1/2011	Malomsoky et al.
2011/0081881	A1	4/2011	Baker et al.
2011/0082790	A1	4/2011	Baker et al.
2011/0110309	A1	5/2011	Bennett
2011/0126141	A1	5/2011	King et al.
2011/0145920	A1	6/2011	Mahaffey et al.
2011/0159818	A1	6/2011	Scherzer et al.
2011/0173678	A1	7/2011	Kaippallimalil et al.
2011/0177811	A1	7/2011	Heckman et al.
2011/0182220	A1	7/2011	Black et al.
2011/0185202	A1	7/2011	Black et al.
2011/0244837	A1	10/2011	Murata et al.
2011/0249668	A1	10/2011	Milligan et al.
2011/0264923	A1	10/2011	Kocher et al.
2011/0277019	A1	11/2011	Pritchard, Jr.
2012/0011017	A1	1/2012	Wolcott et al.
2012/0020296	A1	1/2012	Scherzer et al.
2012/0144025	A1	6/2012	Melander et al.
2012/0166364	A1	6/2012	Ahmad et al.
2012/0196644	A1	8/2012	Scherzer et al.
2012/0238287	A1	9/2012	Scherzer
2013/0029653	A1	1/2013	Baker et al.
2013/0058274	A1	3/2013	Scherzer et al.
2013/0065555	A1	3/2013	Baker et al.
2013/0072177	A1	3/2013	Ross et al.
2013/0084835	A1	4/2013	Scherzer et al.
2013/0144789	A1	6/2013	Aaltonen et al.
2013/0225151	A1	8/2013	King et al.
2013/0326356	A9	12/2013	Zheng et al.
2014/0073291	A1	3/2014	Hildner et al.
2014/0241342	A1	8/2014	Constantinof
2015/0181628	A1	6/2015	Haverinen et al.

FOREIGN PATENT DOCUMENTS

CN	1345154	A	4/2002
CN	1508734	A	6/2004
CN	1538730	A	10/2004
CN	1567818	A	1/2005
CN	101035308	A	3/2006
CN	1801829	A	7/2006
CN	1802839	A	7/2006
CN	1889777	A	7/2006
CN	101155343	B	9/2006
CN	1867024	A	11/2006
CN	1878160	A	12/2006
CN	1937511	A	3/2007
CN	101123553	A	9/2007
CN	101080055	A	11/2007
CN	101115248	A	1/2008
CN	101127988	A	2/2008
CN	101183958	A	5/2008
CN	101335666	A	12/2008
CN	101341764	A	1/2009
CN	101815275	A	8/2010
EP	1098490	A2	5/2001
EP	1289326	A1	3/2003
EP	1463238		9/2004
EP	1503548	A1	2/2005
EP	1545114	A1	6/2005
EP	1739518		1/2007
EP	1772988		4/2007
EP	1850575	A1	10/2007

(56) **References Cited**

FOREIGN PATENT DOCUMENTS

EP	1887732	A1	2/2008
EP	1942698	A1	7/2008
EP	1978772		10/2008
EP	2007065	A1	12/2008
EP	2026514	A1	2/2009
JP	3148713	B2	3/2001
JP	2005339247	A	12/2005
JP	2006041989		2/2006
JP	2006155263	A	6/2006
JP	2006197137		7/2006
JP	2006344007	A	12/2006
JP	2007318354	A	12/2007
JP	2008301121	A	12/2008
JP	2009111919		5/2009
JP	2009212707	A	9/2009
JP	2009218773		9/2009
JP	2009232107	A	10/2009
KR	20040053858	A	6/2004
WO	1998058505		12/1998
WO	1999027723		6/1999
WO	1999065185	A3	5/2001
WO	0208863		1/2002
WO	2002045315	A2	6/2002
WO	2002067616	A1	8/2002
WO	2002093877	A1	11/2002
WO	2003014891		2/2003
WO	2003017063	A2	2/2003
WO	2003017065	A2	2/2003
WO	2003058880	A1	7/2003
WO	2004028070	A1	4/2004
WO	2004064306	A2	7/2004
WO	2004095753	A3	1/2005
WO	2005008995		1/2005
WO	2005053335	A1	6/2005
WO	2005083934	A1	9/2005
WO	2006004467	A1	1/2006
WO	2006004784	A1	1/2006
WO	2006012610	A2	2/2006
WO	2006050758	A1	5/2006
WO	2006077481	A1	7/2006
WO	2006093961	A1	9/2006
WO	2006120558		11/2006
WO	2006130960	A1	12/2006
WO	2007001833	A2	1/2007
WO	2007014630	A1	2/2007
WO	2007018363	A1	2/2007
WO	2007053848	A1	5/2007
WO	2007068288		6/2007
WO	2007097786	A	8/2007
WO	2007107701	A2	9/2007
WO	2007120310		10/2007
WO	2007124279		11/2007
WO	2007126352		11/2007
WO	2007129180	A2	11/2007
WO	2007133844	A	11/2007
WO	2004077797	A3	2/2008
WO	2008017837	A1	2/2008
WO	2008051379	A2	5/2008
WO	2008066419	A1	6/2008
WO	2008080139	A1	7/2008
WO	2008080430	A1	7/2008
WO	2008099802	A1	8/2008
WO	2009008817	A1	1/2009
WO	2006073837	A3	4/2009
WO	2007069245	A3	4/2009
WO	2009091295	A1	7/2009
WO	2010088413	A1	8/2010
WO	2010128391	A2	11/2010
WO	2010128391	A3	1/2011
WO	2011002450	A1	1/2011

OTHER PUBLICATIONS

"ASA/PIX: Allow Split Tunneling for VPN Clients on the ASA Configuration Example," Document ID 70917, Jan. 10, 2008.

"Communication Concepts for Mobile Agent Systems," by Joachim Baumann et al.; Inst. of Parallel and Distributed High-Performance Systems, Univ, of Stuttgart, Germany, pp. 123-135, 1997.

"End to End QoS Solution for Real-time Multimedia Application;" Computer Engineering and Applications, 2007, 43(4):155-159, by Tan Zu-guo, Wang Wen-juan; Information and Science School, Zhanjian Normal College, Zhan jiang, Guangdong 524048, China.

"Jentro Technologies launches Zenlet platform to accelerate location-based content delivery to mobile devices," The Mobile Internet, Boston, MA, Feb. 2008.

"The Construction of Intelligent Residential District in Use of Cable Television Network," Shandong Science, vol. 13, No. 2, Jun. 2000.

3rd Generation Partnership Project, "Technical Specification Group Services and System Aspects; General Packet Radio Service (GPRS) Enhancements for Evolved Universal Terrestrial Radio Access Network (E-UTRAN) Access," Release 8, Document No. 3GPP Ts 23.401, V8.4.0, Dec. 2008.

3rd Generation Partnership Project, "Technical Specification Group Services and System Aspects; Policy and Charging Control Architecture," Release 8, Document No. 3GPP TS 23.203, V8.4.0, Dec. 2008.

Accuris Networks, "The Business Value of Mobile Data Offload—a White Paper", 2010.

Ahmed et al., "A Context-Aware Vertical Handover Decision Algorithm for Multimode Mobile Terminals and Its Performance," BenQ Mobile, Munich Germany; University of Klagenfurt, Klagenfurt, Austria; 2006.

Alonistioti et al., "Intelligent Architectures Enabling Flexible Service Provision and Adaptability," 2002.

Amazon Technologies, Inc., "Kindle™ User's Guide," 3rd Edition, Copyright 2004-2009.

Android Cupcake excerpts, The Android Open Source Project, Feb. 10, 2009.

Anton, B et al., "Best Current Practices for Wireless Internet Service Provider (WISP) Roaming"; Release Date Feb. 2003, Version 1.0; Wi-Fi Alliance—Wireless ISP Roaming (WISPr).

Blackberry Mobile Data System, version 4.1, Technical Overview, 2006.

Byrd, "Open Secure Wireless," May 5, 2010.

Chandrasekhar et al., "Femtocell Networks: A Survey," Jun. 28, 2008.

Chaouchi et al., "Policy Based Networking in the Integration Effort of 4G Networks and Services," 2004 IEEE.

Cisco Systems, Inc., "Cisco Mobile Exchange (CMX) Solution Guide: Chapter 2—Overview of GSM, GPRS, and UMTS," Nov. 4, 2008.

Client Guide for Symantec Endpoint Protection and Symantec Network Access Control, 2007.

Dikaiakos et al., "A Distributed Middleware Infrastructure for Personalized Services," Nov. 24, 2003.

Dixon et al., Triple Play Digital Services: Comcast and Verizon (Digital Phone, Television, and Internet), Aug. 2007.

Droid Wall 1.3.7 description Apr. 28, 2010 obtained from https://www.freewarelovers.com/android/apps/droid-wall.

Ehnert, "Small application to monitor IP trafic on a Blackberry—1.01.03 ", Mar. 27, 2008; http://www.ehnert.net/MiniMoni/.

European Commission, "Data Roaming Tariffs—Transparency Measures," obtained from EUROPA—Europe's Information Society Thematic Portal website, Jun. 24, 2011: "http://ec.europa.eu/information_society/activities/roaming/data/measures/index_en.htm."

Farooq et al., "An IEEE 802.16 WiMax Module for the NS-3 Simulator," Mar. 2-6, 2009.

Fujitsu, "Server Push Technology Survey and Bidirectional Communication in HTTP Browser," Jan. 9, 2008 (JP).

Han et al., "Information Collection Services for Qos-Aware Mobile Applications," 2005.

Hartmann et al., "Agent-Based Banking Transactions & Information Retrieval—What About Performance Issues?" 1999.

Hewlett-Packard Development Company, LP, "IP Multimedia Services Charging," white paper, Jan. 2006.

(56) **References Cited**

OTHER PUBLICATIONS

Hossain et al., "Gain-Based Selection of Ambient Media Services in Pervasive Environments," Mobile Networks and Applications. Oct. 3, 2008.
Jing et al., "Client-Server Computing in Mobile Environments," GTE Labs. Inc., Purdue University, ACM Computing Surveys, vol. 31, No. 2, Jun. 1999.
Kasper et al., "Subscriber Authentication in mobile cellular Networks with virtual software SIM Credentials using Trusted Computing," Fraunhofer-Institute for Secure Information Technology SIT, Darmstadt, Germany; ICACT 2008.
Kassar et al., "An overview of vertical handover decision strategies in heterogeneous wireless networks," ScienceDirect, University Pierre & Marie Curie, Paris, France, Jun. 5, 2007.
Kim, "Free wireless a high-wire act; MetroFi needs to draw enough ads to make service add profits," San Francisco Chronicle, Aug. 21, 2006.
Knight et al., "Layer 2 and 3 Virtual Private Networks: Taxonomy, Technology, and Standarization Efforts," IEEE Communications Magazine, Jun. 2004.
Koutsopoulou et al., "Charging, Accounting and Billing Management Schemes in Mobile Telecommunication Networks and the Internet," IEEE Communications Surveys & Tutorials, First Quarter 2004, vol. 6, No. 1.
Koutsopoulou et al., "Middleware Platform for the Support of Charging Reconfiguration Actions," 2005.
Kuntze et al., "Trustworthy content push," Fraunhofer-Institute for Secure Information Technology SIT; Germany WCNC 2007 proceedings, IEEE.
Kyriakakos et al., "Ubiquitous Service Provision in Next Generation Mobile Networks," Proceedings of the 13th IST Mobile and Wireless Communications Summit, Lyon, France, Jun. 2004.
Li, Yu, "Dedicated E-Reading Device: The State of the Art and the Challenges," Scroll, vol. 1, No. 1, 2008.
Loopt User Guide, metroPCS, Jul. 17, 2008.
Muntermann et al., "Potentiale und Sicherheitsanforderungen mobiler Finanzinformationsdienste und deren Systeminfrastrukturen," Chair of Mobile Commerce & Multilateral Security, Goethe Univ. Frankfurt, 2004.
NetLimiter Lite 4.0.19.0; http://www.heise.de/download/netlimiter-lite-3617703.html from vol. 14/2007.
Nilsson et al., "A Novel MAC Scheme for Solving the QoS Parameter Adjustment Problem in IEEE802.11e EDCA," Feb. 2006.
Nuzman et al., "A compund model for TCP connection arrivals for LAN and WAN applications," Oct. 22, 2002.
Open Mobile Alliance (OMA), Push Architecture, Candidate Version 2.2; Oct. 2, 2007; OMA-AD-Push-V2_2-20071002-C.
Oppliger, Rolf, "Internet Security: Firewalls and Bey," Communications of the ACM, May 1997, vol. 40. No. 5.
Rao et al., "Evolution of Mobile Location-Based Services," Communication of the ACM, Dec. 2003.
Richtel, "Cellphone consumerism; If even a debit card is too slow, now you have a new way to act on impulse: [National Edition]," National Post, Canada, Oct. 2, 2007.
Rivadeneyra et al., "A communication architecture to access data services through GSM," San Sebastian, Spain, 1998.
Ruckus Wireless—White Paper; "Smarter Wi-Fi for Mobile Operator Infrastructures" 2010.
Sabat, "The evolving mobile wireless value chain and market structure," Nov. 2002.
Sadeh et al., "Understanding and Capturing People's Privacy Policies in a Mobile Social Networking Application," ISR School of Computer Science, Carnegie Mellon University, 2007.
Schiller et al., "Location-Based Services," The Morgan Kaufmann Series in Data Management Systems, 2004.
Sharkey, "Coding for Life—Battery Life, That Is," May 27, 2009.
Steglich, Stephan, "I-Centric User Interaction," Nov. 21, 2003.
Sun et al., "Towards Connectivity Management Adaptability: Context Awareness in Policy Representation and End-to-end Evaluation Algorithm," Dept. of Electrical and Information Engineering, Univ of Oulu, Finland, 2004.
Van Eijk, et al., "GigaMobile, Agent Technology for Designing Personalized Mobile Service Brokerage," Jul. 1, 2002.
VerizonWireless.com news, "Verizon Wireless Adds to Portfolio of Cosumer-Friendly Tools With Introduction of Usage Controls, Usage Controls and Chaperone 2.0 Offer Parents Full Family Security Solution," Aug. 18, 2008.
Windows7 Power Management, published Apr. 2009.
Wireless Broadband Alliance, "WISPr 2.0, Apr. 8, 2010"; Doc. Ref. No.: WBA/RM/WISPr, Version 01.00.
Zhu et al., "A Survey of Quality of Service in IEEE 802.11 Networks," IEEE Wireless Communications, Aug. 2004.

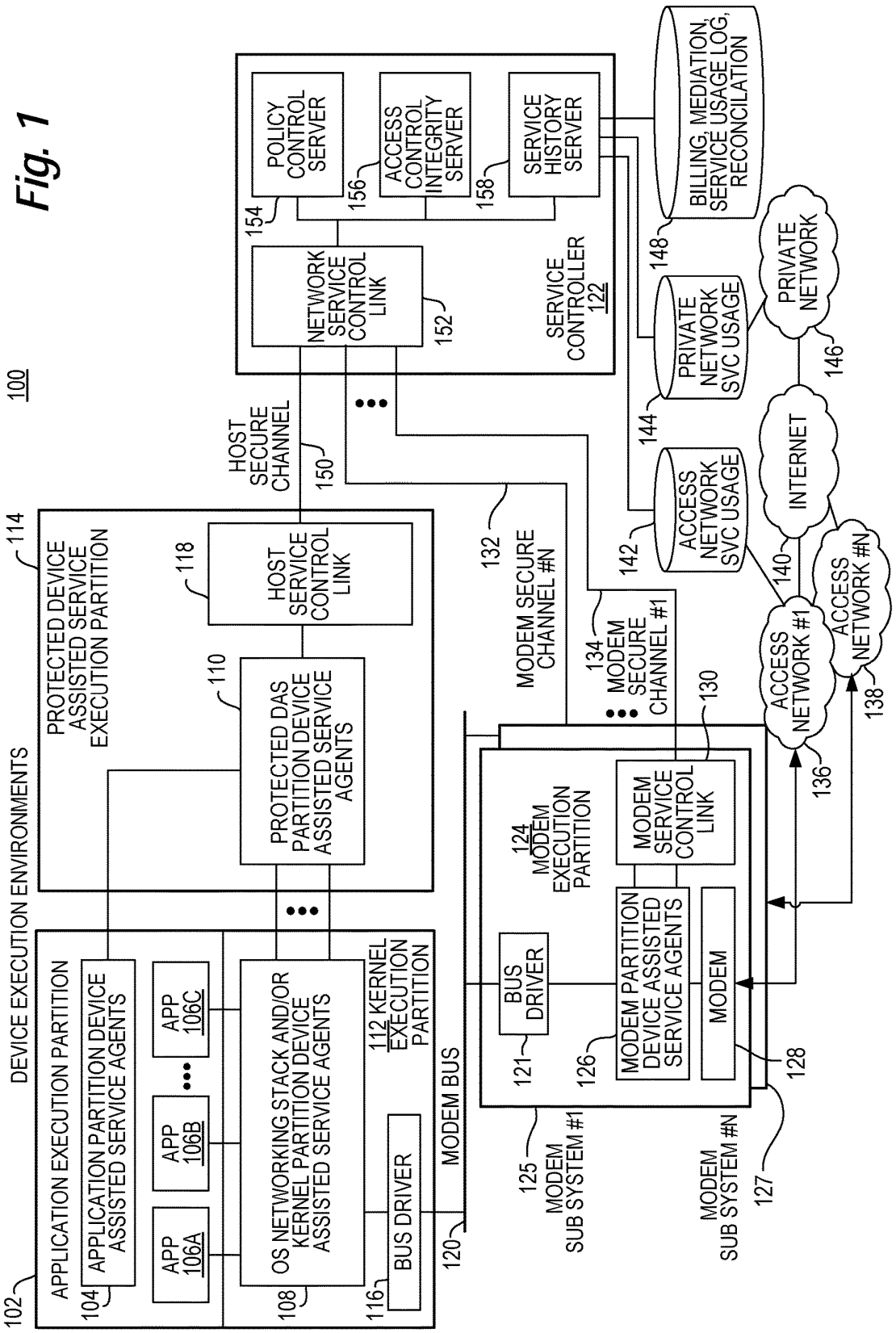
100
DEVICE EXECUTION ENVIRONMENTS
102
APPLICATION EXECUTION PARTITION
104
APPLICATION PARTITION DEVICE ASSISTED SERVICE AGENTS
APP 106A
APP 106B
APP 106C
108
OS NETWORKING STACK AND/OR KERNEL PARTITION DEVICE ASSISTED SERVICE AGENTS
112 KERNEL EXECUTION PARTITION
116
BUS DRIVER
114
PROTECTED DEVICE ASSISTED SERVICE EXECUTION PARTITION
118
HOST SERVICE CONTROL LINK
110
PROTECTED DAS PARTITION DEVICE ASSISTED SERVICE AGENTS
HOST SECURE CHANNEL
150
120
MODEM BUS
132
MODEM SECURE CHANNEL #N
134
MODEM SECURE CHANNEL #1
125
MODEM SUB SYSTEM #1
121
BUS DRIVER
124
MODEM EXECUTION PARTITION
126
MODEM PARTITION DEVICE ASSISTED SERVICE AGENTS
MODEM SERVICE CONTROL LINK
130
MODEM
128
MODEM SUB SYSTEM #N
127
154
POLICY CONTROL SERVER
156
ACCESS CONTROL INTEGRITY SERVER
158
SERVICE HISTORY SERVER
152
NETWORK SERVICE CONTROL LINK
SERVICE CONTROLLER 122
148
BILLING, MEDIATION, SERVICE USAGE LOG, RECONCILATION
144
PRIVATE NETWORK SVC USAGE
142
ACCESS NETWORK SVC USAGE
146
PRIVATE NETWORK
140
INTERNET
136
ACCESS NETWORK #1
138
ACCESS NETWORK #N

Fig. 1

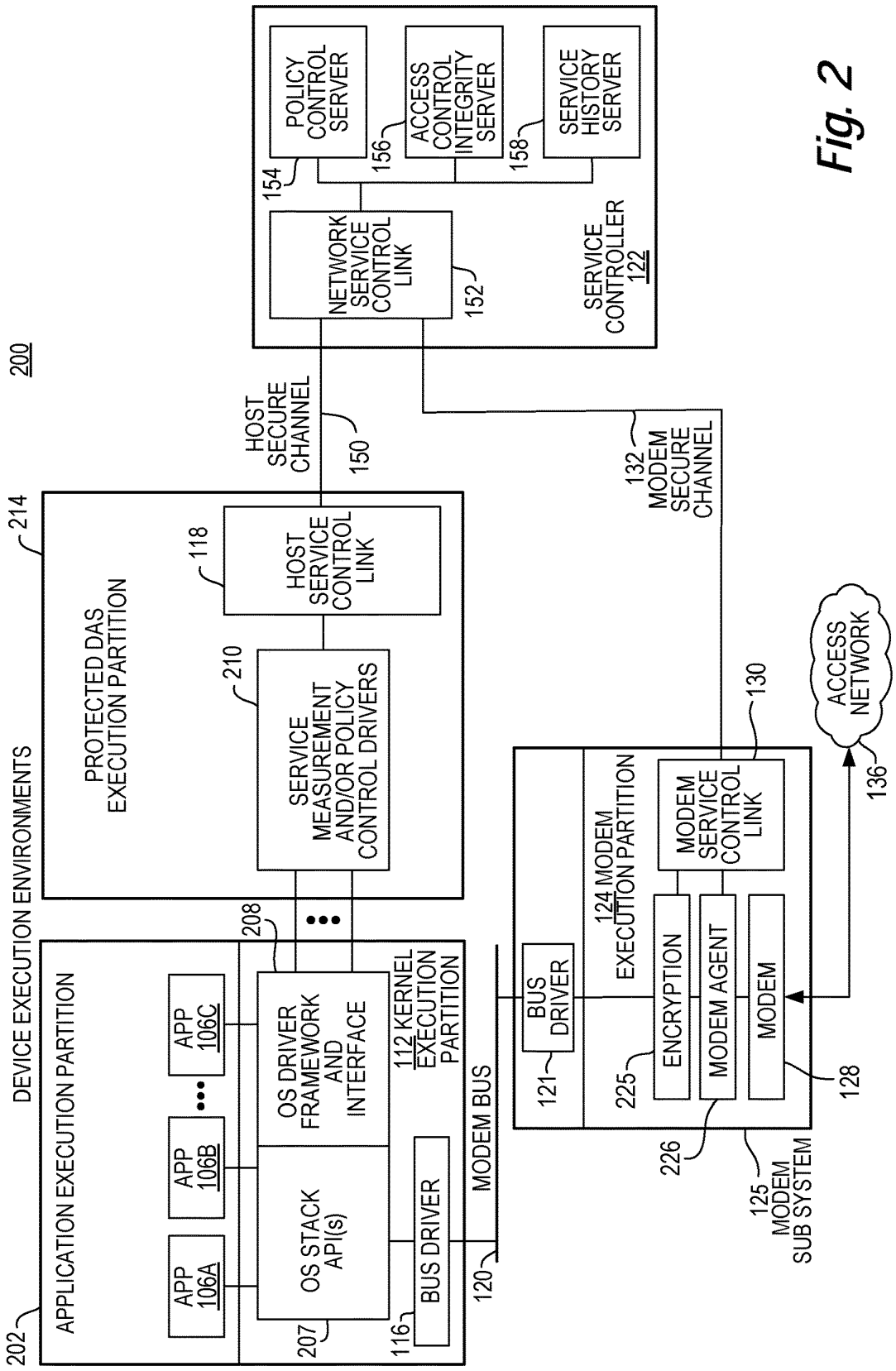
200
DEVICE EXECUTION ENVIRONMENTS
APPLICATION EXECUTION PARTITION
202
APP 106A
APP 106B
APP 106C
OS STACK API(s)
207
OS DRIVER FRAMEWORK AND INTERFACE
208
BUS DRIVER
116
112 KERNEL EXECUTION PARTITION
PROTECTED DAS EXECUTION PARTITION
214
HOST SERVICE CONTROL LINK
118
SERVICE MEASUREMENT AND/OR POLICY CONTROL DRIVERS
210
HOST SECURE CHANNEL
150
MODEM BUS
120
NETWORK SERVICE CONTROL LINK
152
POLICY CONTROL SERVER
154
ACCESS CONTROL INTEGRITY SERVER
156
SERVICE HISTORY SERVER
158
SERVICE CONTROLLER 122
132 MODEM SECURE CHANNEL
BUS DRIVER
121
124 MODEM EXECUTION PARTITION
ENCRYPTION
225
MODEM AGENT
226
MODEM
128
MODEM SERVICE CONTROL LINK
130
125 MODEM SUB SYSTEM
ACCESS NETWORK
136

Fig. 2

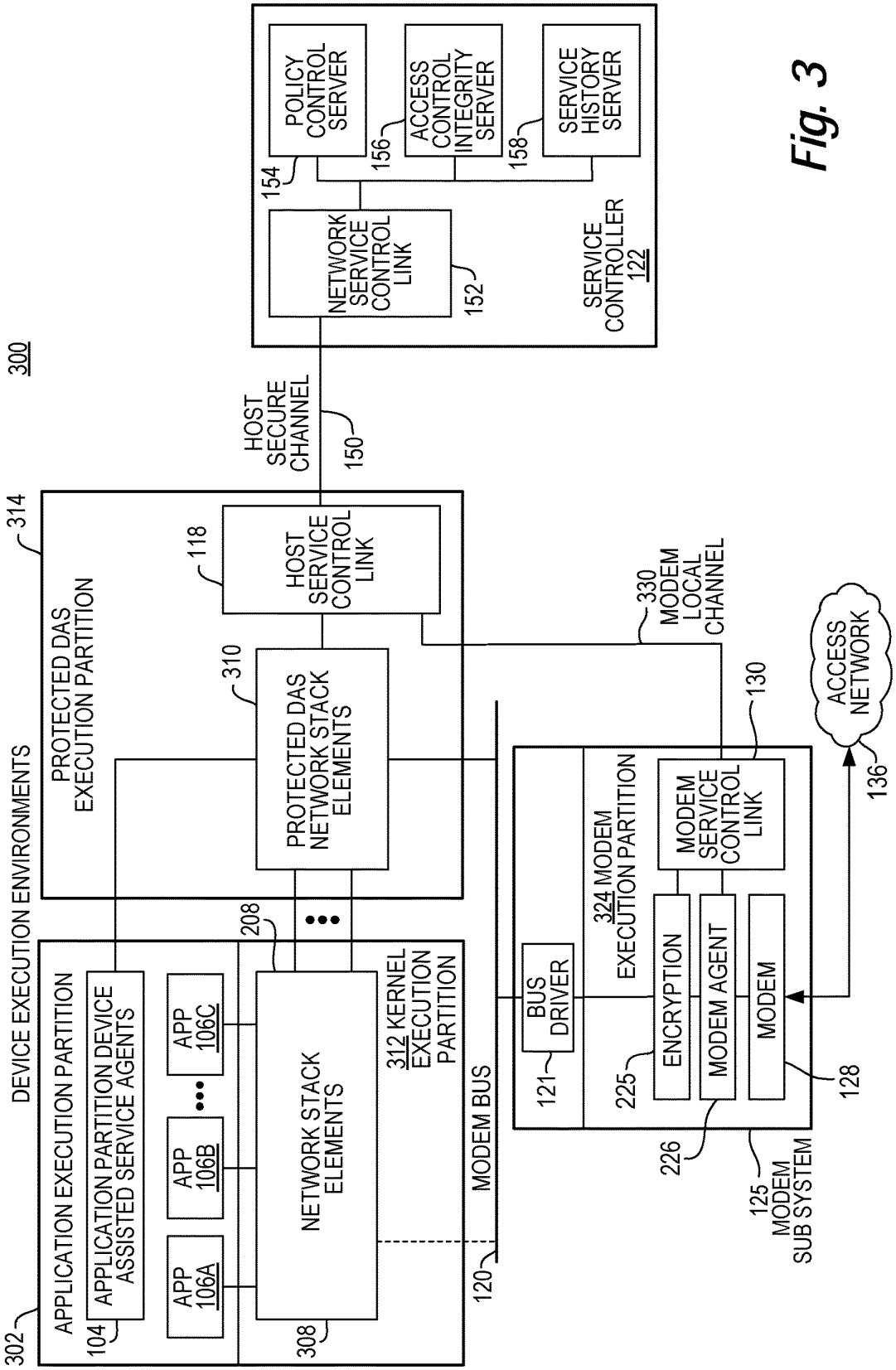
300
DEVICE EXECUTION ENVIRONMENTS
302
APPLICATION EXECUTION PARTITION
104
APPLICATION PARTITION DEVICE ASSISTED SERVICE AGENTS
APP 106A
APP 106B
APP 106C
208
NETWORK STACK ELEMENTS
308
312 KERNEL EXECUTION PARTITION
314
PROTECTED DAS EXECUTION PARTITION
118
HOST SERVICE CONTROL LINK
310
PROTECTED DAS NETWORK STACK ELEMENTS
HOST SECURE CHANNEL
150
NETWORK SERVICE CONTROL LINK
152
POLICY CONTROL SERVER
154
ACCESS CONTROL INTEGRITY SERVER
156
SERVICE HISTORY SERVER
158
SERVICE CONTROLLER 122
MODEM BUS
120
330 MODEM LOCAL CHANNEL
130
MODEM SERVICE CONTROL LINK
BUS DRIVER
121
324 MODEM EXECUTION PARTITION
ENCRYPTION
225
MODEM AGENT
226
MODEM
128
125 MODEM SUB SYSTEM
ACCESS NETWORK
136

Fig. 3

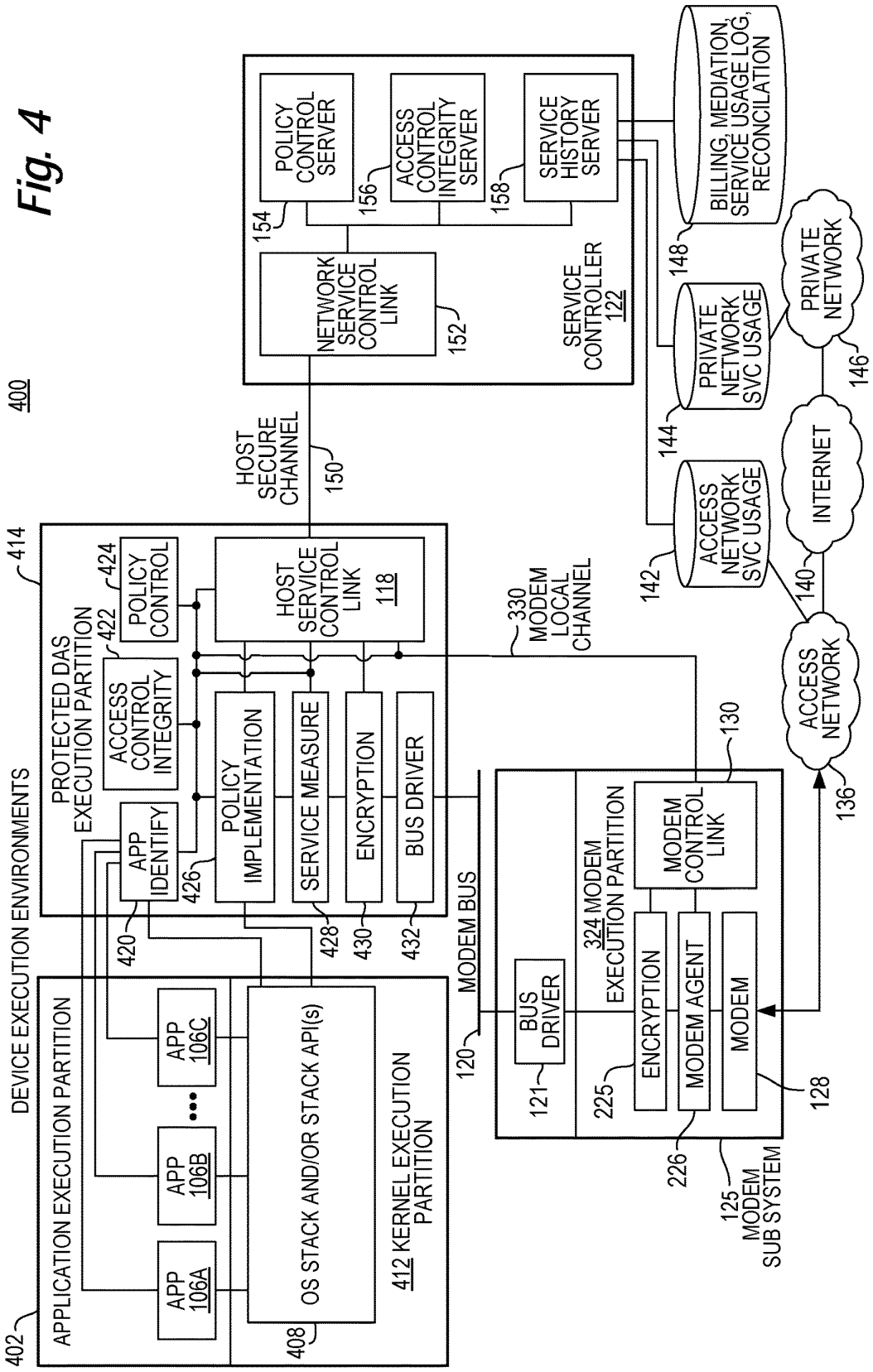
400
DEVICE EXECUTION ENVIRONMENTS
402
APPLICATION EXECUTION PARTITION
APP 106A
APP 106B
APP 106C
OS STACK AND/OR STACK API(s)
408
412 KERNEL EXECUTION PARTITION
414
PROTECTED DAS EXECUTION PARTITION
APP IDENTIFY
420
ACCESS CONTROL INTEGRITY
422
POLICY CONTROL
424
POLICY IMPLEMENTATION
426
SERVICE MEASURE
428
ENCRYPTION
430
BUS DRIVER
432
HOST SERVICE CONTROL LINK 118
HOST SECURE CHANNEL
150
NETWORK SERVICE CONTROL LINK
152
POLICY CONTROL SERVER
154
ACCESS CONTROL INTEGRITY SERVER
156
SERVICE HISTORY SERVER
158
SERVICE CONTROLLER 122
BILLING, MEDIATION, SERVICE USAGE LOG, RECONCILATION
148
PRIVATE NETWORK SVC USAGE
144
ACCESS NETWORK SVC USAGE
142
PRIVATE NETWORK
146
INTERNET
140
ACCESS NETWORK
136
330 MODEM LOCAL CHANNEL
MODEM BUS
120
BUS DRIVER
121
324 MODEM EXECUTION PARTITION
MODEM CONTROL LINK
130
ENCRYPTION
225
MODEM AGENT
226
MODEM
128
125 MODEM SUB SYSTEM

Fig. 4

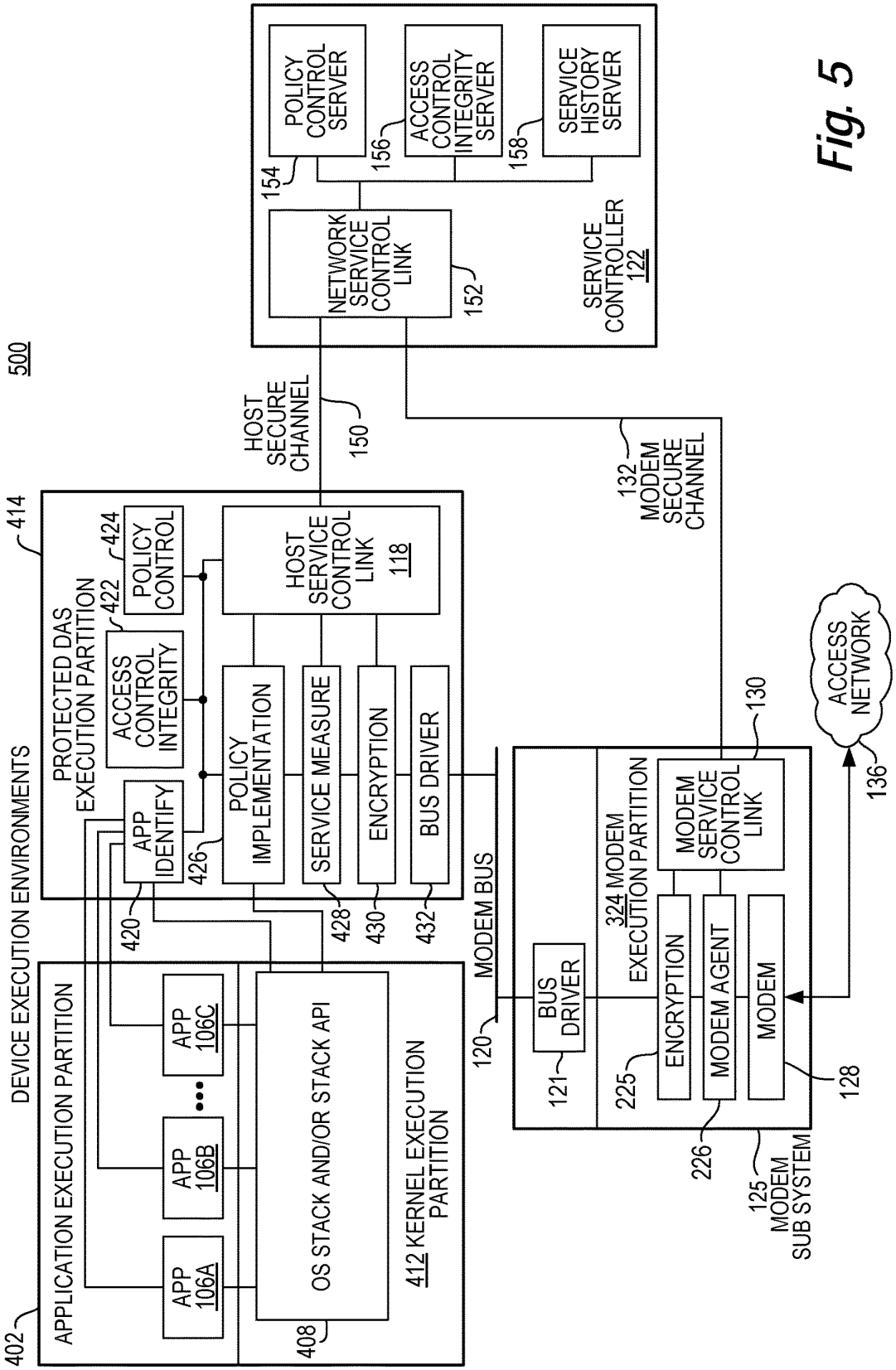
500
SERVICE CONTROLLER 122
NETWORK SERVICE CONTROL LINK
152
POLICY CONTROL SERVER
154
ACCESS CONTROL INTEGRITY SERVER
156
SERVICE HISTORY SERVER
158
HOST SECURE CHANNEL
150
132 MODEM SECURE CHANNEL
DEVICE EXECUTION ENVIRONMENTS
414
PROTECTED DAS EXECUTION PARTITION
POLICY CONTROL
424
ACCESS CONTROL INTEGRITY
422
APP IDENTIFY
420
HOST SERVICE CONTROL LINK 118
POLICY IMPLEMENTATION
426
SERVICE MEASURE
428
ENCRYPTION
430
BUS DRIVER
432
MODEM BUS
120
APPLICATION EXECUTION PARTITION
402
APP 106A
APP 106B
APP 106C
OS STACK AND/OR STACK API
408
412 KERNEL EXECUTION PARTITION
BUS DRIVER
121
324 MODEM EXECUTION PARTITION
MODEM SERVICE CONTROL LINK
130
ENCRYPTION
225
MODEM AGENT
226
MODEM
128
125 MODEM SUB SYSTEM
ACCESS NETWORK
136

Fig. 5

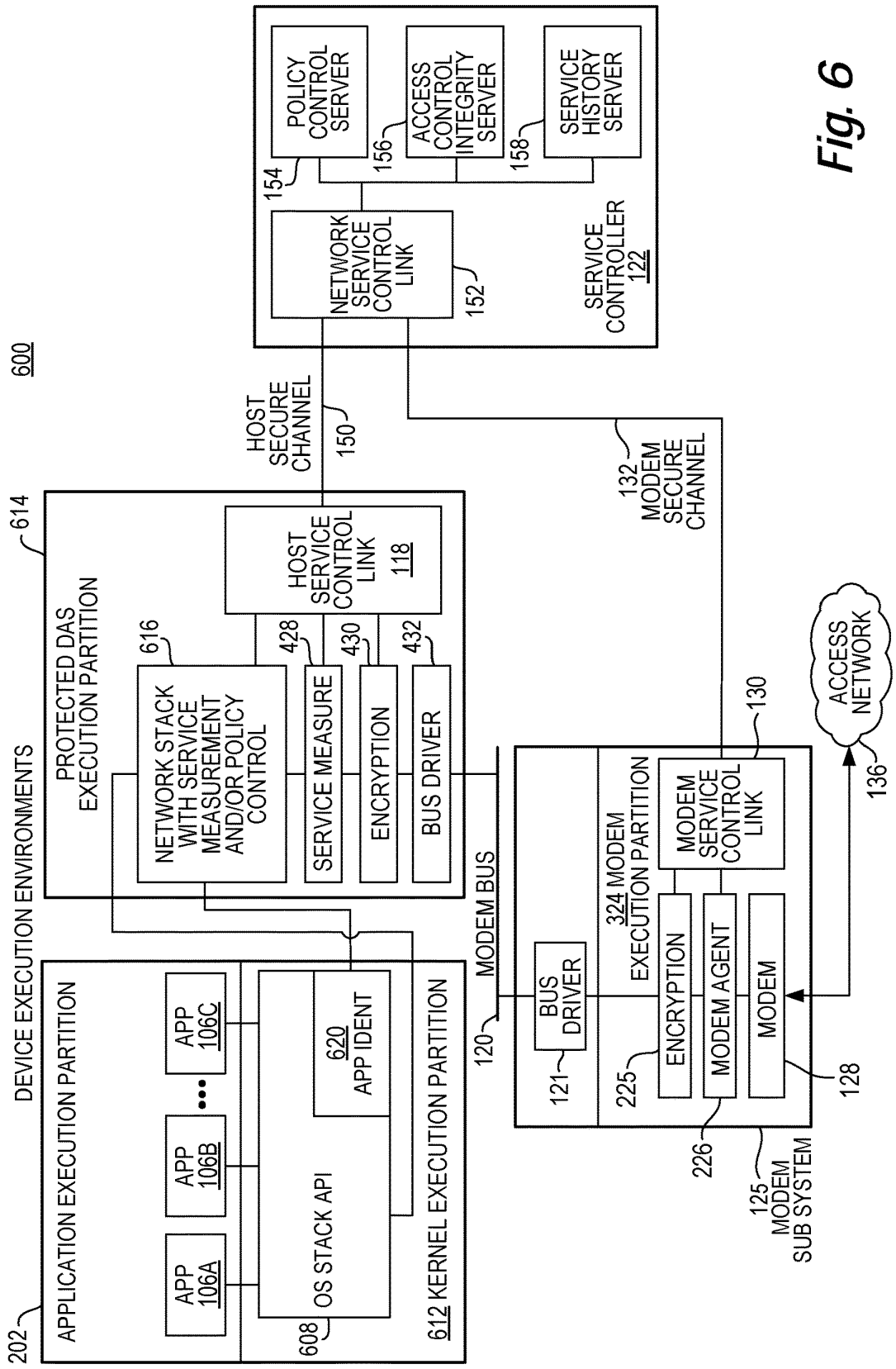
600
DEVICE EXECUTION ENVIRONMENTS
202
APPLICATION EXECUTION PARTITION
APP 106A
APP 106B
APP 106C
OS STACK API
608
620 APP IDENT
612 KERNEL EXECUTION PARTITION
614
PROTECTED DAS EXECUTION PARTITION
616
NETWORK STACK WITH SERVICE MEASUREMENT AND/OR POLICY CONTROL
428
SERVICE MEASURE
430
ENCRYPTION
432
BUS DRIVER
HOST SERVICE CONTROL LINK 118
HOST SECURE CHANNEL
150
MODEM BUS
120
121
BUS DRIVER
324 MODEM EXECUTION PARTITION
225
ENCRYPTION
226
MODEM AGENT
128
MODEM
130
MODEM SERVICE CONTROL LINK
125 MODEM SUB SYSTEM
132 MODEM SECURE CHANNEL
ACCESS NETWORK
136
154
POLICY CONTROL SERVER
156
ACCESS CONTROL INTEGRITY SERVER
158
SERVICE HISTORY SERVER
152
NETWORK SERVICE CONTROL LINK
SERVICE CONTROLLER 122

Fig. 6

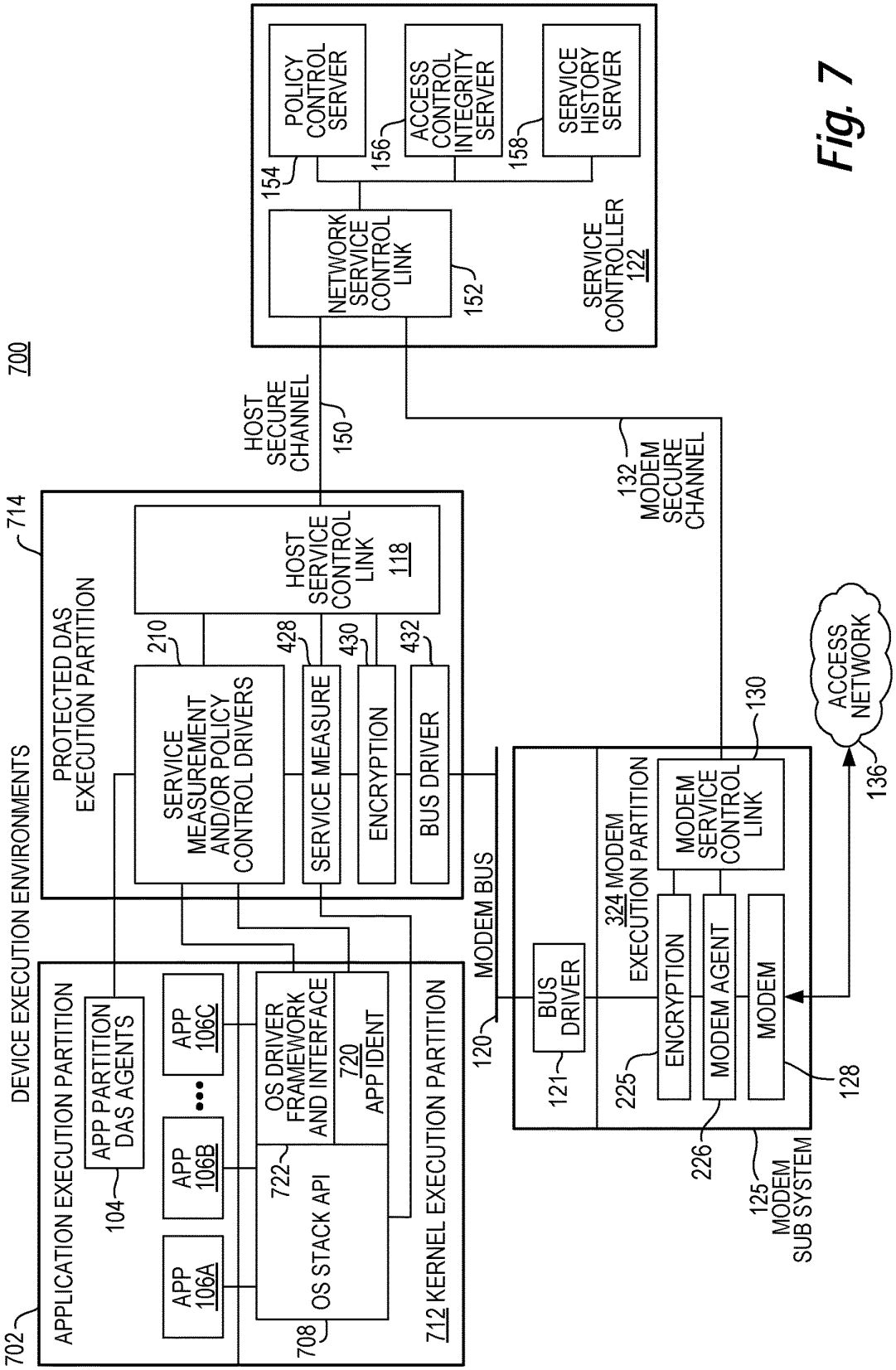
700
DEVICE EXECUTION ENVIRONMENTS
702
APPLICATION EXECUTION PARTITION
APP PARTITION DAS AGENTS
104
APP 106A
APP 106B
APP 106C
OS STACK API
722
OS DRIVER FRAMEWORK AND INTERFACE
720 APP IDENT
708
712 KERNEL EXECUTION PARTITION
714
PROTECTED DAS EXECUTION PARTITION
SERVICE MEASUREMENT AND/OR POLICY CONTROL DRIVERS
210
HOST SERVICE CONTROL LINK 118
SERVICE MEASURE
428
ENCRYPTION
430
BUS DRIVER
432
HOST SECURE CHANNEL
150
NETWORK SERVICE CONTROL LINK
152
POLICY CONTROL SERVER
154
ACCESS CONTROL INTEGRITY SERVER
156
SERVICE HISTORY SERVER
158
SERVICE CONTROLLER 122
132 MODEM SECURE CHANNEL
MODEM BUS
120
BUS DRIVER
121
324 MODEM EXECUTION PARTITION
MODEM SERVICE CONTROL LINK
130
ENCRYPTION
225
MODEM AGENT
226
MODEM
128
125 MODEM SUB SYSTEM
ACCESS NETWORK
136

Fig. 7

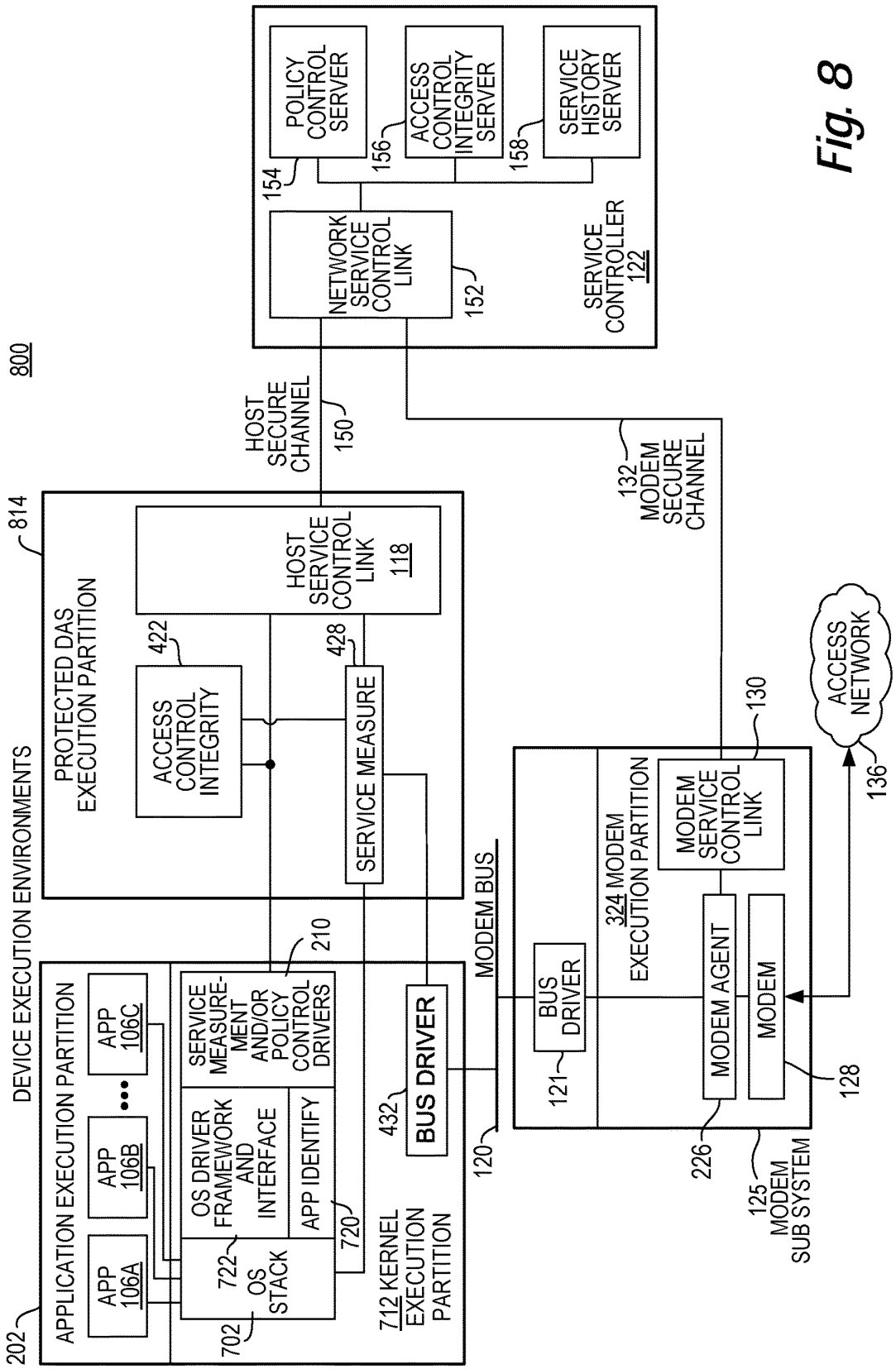
800
DEVICE EXECUTION ENVIRONMENTS
814
PROTECTED DAS EXECUTION PARTITION
ACCESS CONTROL INTEGRITY
422
HOST SERVICE CONTROL LINK
118
428
SERVICE MEASURE
HOST SECURE CHANNEL
150
NETWORK SERVICE CONTROL LINK
152
POLICY CONTROL SERVER
154
ACCESS CONTROL INTEGRITY SERVER
156
SERVICE HISTORY SERVER
158
SERVICE CONTROLLER 122
132 MODEM SECURE CHANNEL
ACCESS NETWORK
136
130
MODEM SERVICE CONTROL LINK
324 MODEM EXECUTION PARTITION
MODEM AGENT
MODEM
128
226
125 MODEM SUB SYSTEM
MODEM BUS
120
BUS DRIVER
121
202
APPLICATION EXECUTION PARTITION
APP 106A
APP 106B
APP 106C
SERVICE MEASURE-MENT AND/OR POLICY CONTROL DRIVERS
210
OS DRIVER FRAMEWORK AND INTERFACE
APP IDENTIFY
720
722 OS STACK
702
432
BUS DRIVER
712 KERNEL EXECUTION PARTITION

Fig. 8

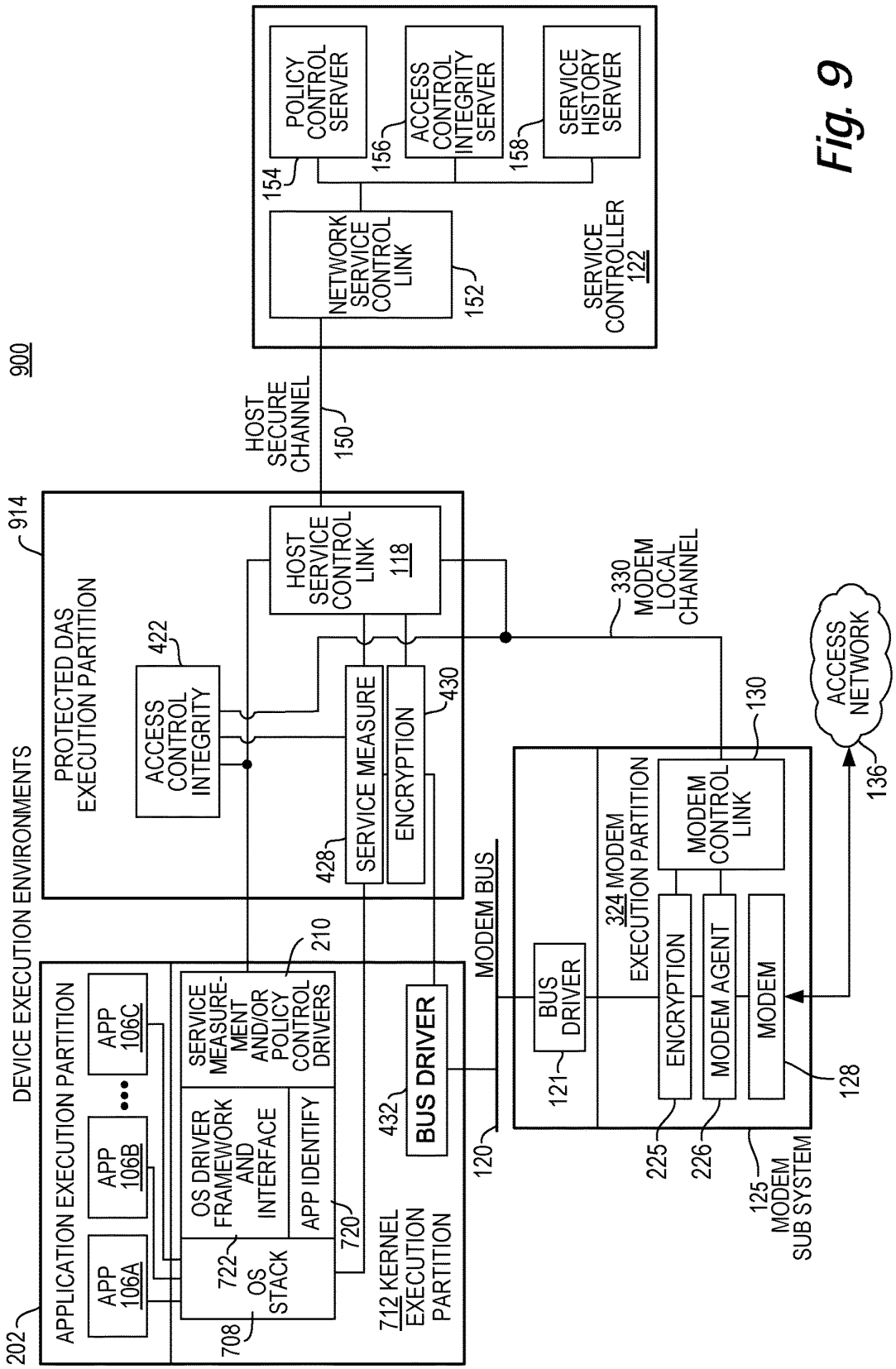
900
DEVICE EXECUTION ENVIRONMENTS
914
PROTECTED DAS EXECUTION PARTITION
ACCESS CONTROL INTEGRITY
422
HOST SERVICE CONTROL LINK
118
SERVICE MEASURE
428
ENCRYPTION
430
HOST SECURE CHANNEL
150
NETWORK SERVICE CONTROL LINK
152
POLICY CONTROL SERVER
154
ACCESS CONTROL INTEGRITY SERVER
156
SERVICE HISTORY SERVER
158
SERVICE CONTROLLER 122
330 MODEM LOCAL CHANNEL
ACCESS NETWORK
136
130
MODEM CONTROL LINK
324 MODEM EXECUTION PARTITION
ENCRYPTION
MODEM AGENT
MODEM
128
225
226
125 MODEM SUB SYSTEM
MODEM BUS
120
BUS DRIVER
121
202
APPLICATION EXECUTION PARTITION
APP 106A
APP 106B
APP 106C
SERVICE MEASURE-MENT AND/OR POLICY CONTROL DRIVERS
210
OS DRIVER FRAMEWORK AND INTERFACE
APP IDENTIFY
720
722 OS STACK
708
712 KERNEL EXECUTION PARTITION
432
BUS DRIVER

Fig. 9

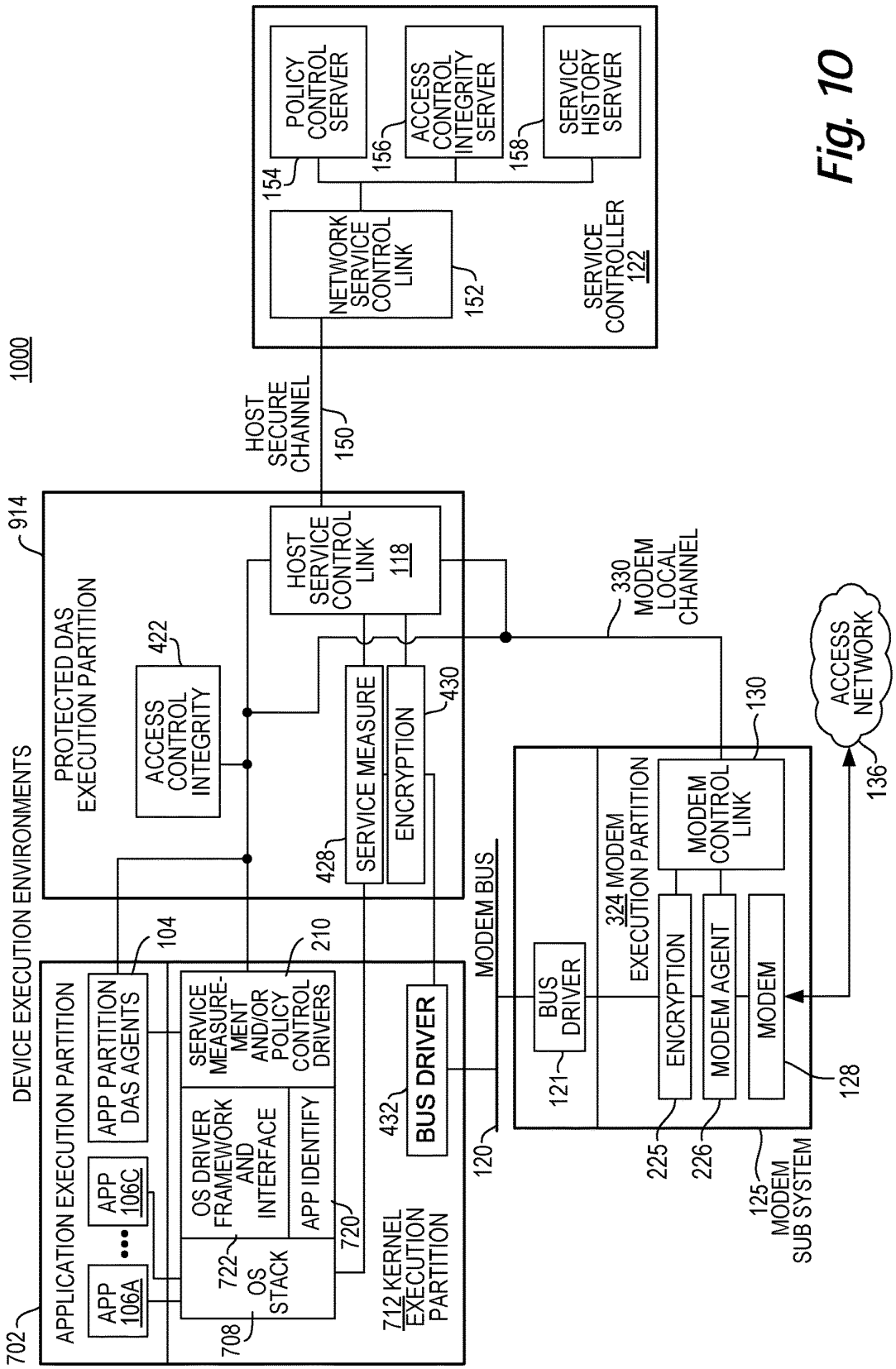
1000
DEVICE EXECUTION ENVIRONMENTS
914
PROTECTED DAS EXECUTION PARTITION
ACCESS CONTROL INTEGRITY
422
HOST SERVICE CONTROL LINK
118
SERVICE MEASURE
428
ENCRYPTION
430
HOST SECURE CHANNEL
150
NETWORK SERVICE CONTROL LINK
152
POLICY CONTROL SERVER
154
ACCESS CONTROL INTEGRITY SERVER
156
SERVICE HISTORY SERVER
158
SERVICE CONTROLLER 122
330 MODEM LOCAL CHANNEL
ACCESS NETWORK
136
702
APPLICATION EXECUTION PARTITION
APP 106A
APP 106C
APP PARTITION DAS AGENTS
104
SERVICE MEASURE-MENT AND/OR POLICY CONTROL DRIVERS
210
OS DRIVER FRAMEWORK AND INTERFACE
APP IDENTIFY
720
722 OS STACK
708
712 KERNEL EXECUTION PARTITION
BUS DRIVER
432
MODEM BUS
120
BUS DRIVER
121
324 MODEM EXECUTION PARTITION
MODEM CONTROL LINK
130
ENCRYPTION
MODEM AGENT
MODEM
128
225
226
125 MODEM SUB SYSTEM

Fig. 10

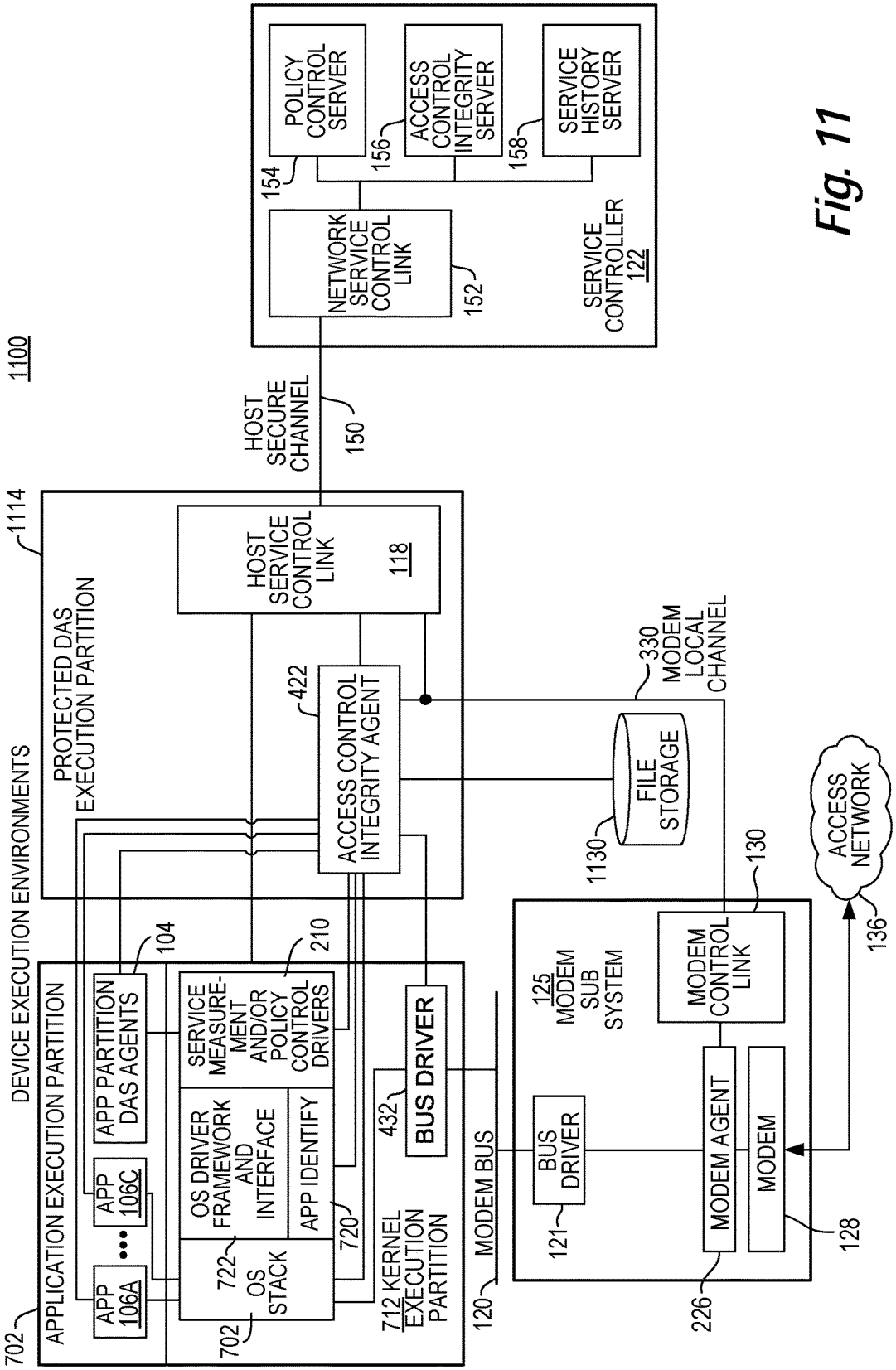
1100
DEVICE EXECUTION ENVIRONMENTS
1114
PROTECTED DAS EXECUTION PARTITION
HOST SECURE CHANNEL
150
NETWORK SERVICE CONTROL LINK
152
POLICY CONTROL SERVER
154
ACCESS CONTROL INTEGRITY SERVER
156
SERVICE HISTORY SERVER
158
SERVICE CONTROLLER 122
HOST SERVICE CONTROL LINK
118
422
ACCESS CONTROL INTEGRITY AGENT
330 MODEM LOCAL CHANNEL
FILE STORAGE
1130
ACCESS NETWORK
136
130
MODEM CONTROL LINK
125 MODEM SUB SYSTEM
BUS DRIVER
121
MODEM AGENT
MODEM
128
226
MODEM BUS
120
712 KERNEL EXECUTION PARTITION
432
BUS DRIVER
APPLICATION EXECUTION PARTITION
702
APP 106A
APP 106C
104
APP PARTITION DAS AGENTS
OS DRIVER FRAMEWORK AND INTERFACE
722
OS STACK
702
APP IDENTIFY
720
SERVICE MEASURE-MENT AND/OR POLICY CONTROL DRIVERS
210

Fig. 11

SECURITY TECHNIQUES FOR DEVICE ASSISTED SERVICES

BACKGROUND OF THE INVENTION

With the advent of mass market digital communications, applications and content distribution, many access networks such as wireless networks, cable networks and DSL (Digital Subscriber Line) networks are pressed for user capacity, with, for example, EVDO (Evolution-Data Optimized), HSPA (High Speed Packet Access), LTE (Long Term Evolution), WiMax (Worldwide Interoperability for Microwave Access), DOCSIS, DSL, and Wi-Fi (Wireless Fidelity) becoming user capacity constrained. In the wireless case, although network capacity will increase with new higher capacity wireless radio access technologies, such as MIMO (Multiple-Input Multiple-Output), and with more frequency spectrum and cell splitting being deployed in the future, these capacity gains are likely to be less than what is required to meet growing digital networking demand.

Similarly, although wire line access networks, such as cable and DSL, can have higher average capacity per user compared to wireless, wire line user service consumption habits are trending toward very high bandwidth applications and content that can quickly consume the available capacity and degrade overall network service experience. Because some components of service provider costs go up with increasing bandwidth, this trend will also negatively impact service provider profits.

BRIEF DESCRIPTION OF THE DRAWINGS

Various embodiments of the invention are disclosed in the following detailed description and the accompanying drawings.

FIG. **1** illustrates a secure execution environment for device assisted services in accordance with some embodiments.

FIG. **2** illustrates another secure execution environment for device assisted services in accordance with some embodiments.

FIG. **3** illustrates another secure execution environment for device assisted services in accordance with some embodiments.

FIG. **4** illustrates another secure execution environment for device assisted services in accordance with some embodiments.

FIG. **5** illustrates another secure execution environment for device assisted services in accordance with some embodiments.

FIG. **6** illustrates another secure execution environment for device assisted services in accordance with some embodiments.

FIG. **7** illustrates another secure execution environment for device assisted services in accordance with some embodiments.

FIG. **8** illustrates another secure execution environment for device assisted services in accordance with some embodiments.

FIG. **9** illustrates another secure execution environment for device assisted services in accordance with some embodiments.

FIG. **10** illustrates another secure execution environment for device assisted services in accordance with some embodiments.

FIG. **11** illustrates another secure execution environment for device assisted services in accordance with some embodiments.

DETAILED DESCRIPTION

The invention can be implemented in numerous ways, including as a process; an apparatus; a system; a composition of matter; a computer program product embodied on a computer readable storage medium; and/or a processor, such as a processor configured to execute instructions stored on and/or provided by a memory coupled to the processor. In this specification, these implementations, or any other form that the invention may take, may be referred to as techniques. In general, the order of the steps of disclosed processes may be altered within the scope of the invention. Unless stated otherwise, a component such as a processor or a memory described as being configured to perform a task may be implemented as a general component that is temporarily configured to perform the task at a given time or a specific component that is manufactured to perform the task. As used herein, the term 'processor' refers to one or more devices, circuits, and/or processing cores configured to process data, such as computer program instructions.

A detailed description of one or more embodiments of the invention is provided below along with accompanying figures that illustrate the principles of the invention. The invention is described in connection with such embodiments, but the invention is not limited to any embodiment. The scope of the invention is limited only by the claims and the invention encompasses numerous alternatives, modifications and equivalents. Numerous specific details are set forth in the following description in order to provide a thorough understanding of the invention. These details are provided for the purpose of example and the invention may be practiced according to the claims without some or all of these specific details. For the purpose of clarity, technical material that is known in the technical fields related to the invention has not been described in detail so that the invention is not unnecessarily obscured.

In some embodiments, security techniques for device assisted services are provided. In some embodiments, secure service measurement and/or control execution partition techniques for device assisted services are provided. In some embodiments, a secure execution environment for device assisted services is provided. In some embodiments, a secure stack for device assisted services is provided. In some embodiments, a secure memory for device assisted services is provided. In some embodiments, a secure modem for device assisted services is provided (e.g., providing a secure communication link between the modem/modem driver and a service processor and/or agent on the device, such as a communications device or an intermediate networking device). In some embodiments, one or more secure monitoring points for device assisted services are provided. In some embodiments, one or more secure monitoring points with verification for device assisted services are provided (e.g., a secured monitoring point can be provided in a modem, which communicates securely to a secured execution environment in a CPU/processor, which can then verify such service usage measures). In some embodiments, a secure bus for device assisted services is provided. In some embodiments, a secure execution environment in the CPU/processor for device assisted services is provided. In some embodiments, secure access to a secure execution environment(s) for device assisted services is provided (e.g., securing communication from a bottom of the stack, such as

modem drivers, which require credentials to access the bus as controlled by a service processor or secure agent on the device, and in which the traffic on the bus is encrypted). In some embodiments, various secure execution environments for device assisted services are provided using various hardware partition techniques (e.g., secure memory, secure modems, secure memory partition(s) in the CPU/processor), as described herein.

In some embodiments, device assisted services (DAS) provide for one or more of device based service usage measurements, service usage policy implementation, service usage accounting, service usage control, and any of the other functions described in various embodiments that assist, replace, and/or augment network based functions. For example, various DAS embodiments perform one or more of the following: facilitate and control activation to one or more access service networks; measure access and/or service usage on one or more access networks; control access and/or service usage on one or more access networks; account for different types of service usage on one or more access networks; implement quality of service (QOS) controls, collect and report QOS traffic demand, aggregate multiple device QOS demand reports to asses a measure of overall network QOS demand, and/or facilitate QOS resource allocation; and/or facilitate roaming between access networks. There are many more functions and embodiments for DAS as described with respect to various embodiments.

In some embodiments, various program/functional elements that perform the functions to implement various DAS embodiments are referred to herein as DAS agents or device assisted service agents, or in some embodiments, more specific terms are used to be more descriptive in specific examples. In some embodiments, device assisted service agent functions include service measurements and/or service measure recording and/or service measure reporting (e.g., to the service controller, the device, the user, or other device agents) and/or service measure synchronization (e.g., between device and network). In some embodiments, device assisted service agent functions include service usage controls and/or service usage control policy settings. In some embodiments, service usage controls include one or more of network authorization, network authentication, network admission, access control, service usage activity classification, allowing or disallowing one or more service usage activity and traffic shaping for one or more service usage activity.

In some embodiments, device assisted service agent functions include one or more of the following: reporting service usage to QOS control elements in the network, receiving QOS assignment from the network, reporting QOS assignments to the network, and/or communicating with QOS service reservation elements in the network. In some embodiments, device assisted service agent functions include one or more of implementing QOS service controls on the device based on one or more of the following criteria: fair queuing of service usage activities, differentiated QOS based on an assigned QOS hierarchy of service usage activities, service usage activity QOS assignments from the network for one or more service usage activities, service usage activity policy directives from the network for one or more service usage activities.

In some embodiments, a service control link is used for communication between the device assisted service agents and the service controller. In some embodiments, the service control link is a secure link (e.g., an encrypted communication link).

In some embodiments, the device assisted service agent functions include device assisted service system communication, measuring and/or recording and/or reporting and/or synchronizing service measures, observing communicating information for service control integrity, communicating information for service control policy instructions and/or settings, or updating device assisted software and/or agent settings.

In some embodiments, device assisted service on the device includes the following: service measurements, service controls, user interface and usage reporting, user policy options, accept policy instructions, protected execution partition provided to prevent hacking, malware, errors, and other security techniques. In some embodiments, device assisted service on the server includes one or more of the following: set policy, set configurations, install/update agents, check usage versus policy, check proper operation of agents, synchronize usage from network to device, and other verification techniques. For example, when errors in policy enforcement are detected, servers can perform actions to either further observe, quarantine, or suspend the device.

In some embodiments, a control server/control service network element receives service measures from the device. In some embodiments, the control server/control service network element receives service measures from the network. In some embodiments, the control server/control service network element sets policies and manages service across multiple networks (e.g., while one modem is shown in various figures, multiple modems can be employed for multiple networks with consistent service usage measures, service controls, QOS controls, UI (User Interface), user preferences, user usage reporting, and/or other settings/controls across different networks).

In some embodiments, traffic type refers to one or more of the following: best effort network traffic, real-time traffic (e.g., live voice such as VOIP, live video, etc.), streaming traffic, multi-cast traffic, uni-cast traffic, point to point traffic, file types, traffic associated with an application, real time traffic, traffic with an assigned priority, traffic without an assigned priority, and traffic for a certain network.

In some embodiments, service usage activity refers to a usage of service by a device. In some embodiments, service usage activity can be one or more of connection to an access network, connection to certain destinations, URLs or addresses on a network, connection to the network by one or more applications, transmission of certain types of traffic, a type of transaction based service, a type of advertising based services, or a combination of one or more of the following: an application type, a network destination/address/URL, a traffic type, and a transaction type.

In some embodiments, protection of the device assisted service agents/functional elements to protect the functions that perform the device assisted functions is provided with a protected execution partition on the CPU (Central Processor Unit), APU (Auxiliary Processor Unit), or another hardware based processor. For example, such hardware protected execution capabilities in the CPU, APU, or other processor can be combined in some embodiments with either OS software functions or other native mode software functions to create secure program execution partitions as described herein. In some embodiments, the term host is used to refer to the hardware and firmware and/or software system that executes the device applications and networking stack. In some embodiments, some of the device assisted service agents/functions are implemented in a modem execution partition environment.

FIG. **1** illustrates a secure execution environment **100** (e.g., for a communications device) for device assisted services in accordance with some embodiments. As shown in FIG. **1**, the device execution environments include program/functional elements for a communications (e.g., a communications device can be an intermediate networking device, such as 3G/4G WWAN to WLAN bridges/routers/gateways, femto cells, DOCSIS modems, DSL modems, remote access/backup routers, and other intermediate network devices, or a mobile communications device, such as a mobile phone, a PDA, an eBook reader, a music device, an entertainment/gaming device, a computer, laptop, a netbook, a tablet, a home networking system, and/or any other mobile communications device) device that utilizes the modem subsystems #**1** (**125**) through #N (**127**) to connect to one or more of the access networks #**1** (**136**) through #N (**138**). In some embodiments, a communications device includes multiple program execution partitions. As shown in FIG. **1**, four execution partitions are provided: an application execution partition **102** in which, for example, application programs execute, a kernel execution partition **112** in which, for example, the lower level drivers and basic low level OS programs execute, a protected device assisted service (DAS) execution partition **114** (also referred to as protected DAS partition) in which, in some embodiments, some or all of the device assisted service agents and/or functions execute, and a modem execution partition **124** in which, for example, the modem program elements execute and, in some embodiments, some or all of the device assisted service agents and/or functions execute. In some embodiments, each of these execution partitions are optimized for different software functions, each providing programs with the basic physical memory, data memory, CPU or APU or modem processor execution resources, high level and/or low level OS, memory management, file storage, I/O device resources (e.g., user interface (UI), peripherals, etc.), network communications stack, other device resources, and/or other resources that are required or used for operation of the programs. The collection of these hardware and software resources for the CPU or APU is sometimes referred to herein with the term host.

As shown, FIG. **1** illustrates an application execution partition **102** and a kernel execution partition **112**, which are shown as separate partitions within the device execution environments. For example, this separation is based on the manner in which "kernel programs" (e.g., drivers and network stack, etc.) are commonly supported as compared to "application programs" (e.g., browsers, word processors, user interfaces, etc.) within the context of several different popular operating systems (OS) (e.g., Windows, UNIX, Linux, MAC OS, certain mobile device OSs, certain embedded device OSs, etc.). In some embodiments, this functional separation is not required, and, in some embodiments, other functional separations are supported.

As shown in FIG. **1**, protected device assisted service agents, such as the protected DAS partition device assisted service agents **110**, execute in the protected DAS partition **114** while unprotected device assisted service agents and/or OS networking stack elements and applications (e.g., applications **106**A through **106**C) execute outside of the secure device assisted service execution partition **114**, such as the application partition device assisted service agents **104** and the OS networking stack and/or kernel partition device assisted service agents **108**. For example, the protected DAS partition **114** can make it more difficult for a hacker, malware or system errors to compromise, attack or modify the device assisted service measurements, service policy implementation or service usage control operations on the device (e.g., communications device). In some embodiments, the protected DAS partition **114** need not support open access to all programs and OS elements so that it can be easier to protect. Also, as shown, a bus driver **116** in the application execution partition **102** provides for communication with a modem bus **120**, which is in communication with a bus driver **121** in the modem execution partition **124**. The protected DAS partition also includes a host service control link **118**, which facilitates communication with a host secure channel **150** as shown.

In some embodiments, the protected DAS partition **114** is a protected execution partition on the main device that is supported by certain configurations in the host (e.g., a secure virtual execution environment or a separate hardware security function). For example, this protected execution partition can be used to provide added service measurement integrity and/or service control integrity for a device assisted service enabled device. In some embodiments, as described herein, the operating system (OS) also performs a role in establishing the protected execution partition for secure operation of device assisted services, and, in some embodiments, this role is performed by native software or firmware operating on secure hardware elements.

In some embodiments, the DAS agents responsible for maintaining service control integrity execute in the protected DAS partition **114**. For example, the protected DAS partition device assisted service agents **110** can include one or more of the following: one or more service usage measurement functions; some or all of the device networking stack functions that are monitored and/or controlled by the device assisted services system; device drivers that interface to an OS networking stack to observe or manipulate stack traffic; access control integrity functions; service policy control functions; service UI functions; application identification functions, and/or functions to classify service usage activities by combinations of application, address/URL and/or traffic type; modem bus driver functions; and/or modem data encryption functions to prevent other unauthorized programs from bypassing the device assisted service measurements and/or controls by directly accessing the modem around the stack. In some embodiments, the system designer or a given set of design criteria determine which of the various described device assisted agent functions should be executed in protected DAS partition **114** to strengthen the service control integrity for the system.

In some embodiments, the device operating system provides for the protected DAS partition **114** in addition to conventional security features available in the operating system. In some embodiments, the protected DAS partition **114** provides an execution partition with increased program execution protection in which, for example, service measurement and/or service control programs (agents) can execute in a mode that provides for higher access control integrity (e.g., proper service usage reporting and/or service measurement and/or service control system operation with increased protection from attacks, errors, malware, etc.). In some embodiments, a hardware assisted secure execution partition provides for increased program execution protection for device assisted service agent functions.

In some embodiments, a service control link (e.g., host service control link **118** via host secure channel **150** to network service control link **152**) is used for communication between the device assisted service agents and a service controller **122**. In some embodiments, the service control link is a secure link (e.g., an encrypted communications link). In some embodiments, an encrypted secure control

link can be implemented over the higher layers of the network stack (e.g., TCP, HTTP, TLS, etc.), and, in some embodiments, the encrypted link can be implemented over lower layers in the network stack, such as the IP layer or the access network layers (e.g., the WWAN device management channels or signaling layers). In some embodiments, service control link security is provided at least in part by encrypting link traffic between the device and the service controller **122**. In some embodiments, service control link security is provided at least in part by running the service control link device side program agents in the protected DAS partition **114**. In some embodiments, service control link security is achieved at least in part by restricting access to the service control link to certain device assisted service agents that are allowed to communicate with the service controller **122**. In some embodiments, the agents that are allowed to communicate with the service control link perform such communications using encrypted communications. In some embodiments, the encrypted communications is accomplished with a secure inter-agent communication bus on the device. In some embodiments, the only mechanism for modifying the configuration of the operation, execution code, execution instructions and/or settings of certain device assisted service processor agents executing in the protected DAS partition **114** is through the service control link. In some embodiments, the only mechanism for modifying any program elements executing inside the protected DAS partition **114** is through the service control link so that only the service controller **122** may modify the operation or service policy settings for the agents located in the service measurement and/or service control execution partition.

As shown in FIG. **1**, various server functions within the service controller **122** are provided. In some embodiments, a service history server **158** collects service usage measures from one or more of the device DAS agents and/or from various sources of potential network based service usage databases, such as the access network service usage **142** (e.g., carrier charging data record (CDR) systems), private network service usage **144** (e.g., MVNO or enterprise network service usage accounting system), and/or billing, mediation service usage log, reconciliation **148** (e.g., service provider billing or mediation system). In some embodiments, an access control integrity server **156** is used to compare various access control verification checks to ensure that the device assisted service agents have not been compromised. The various embodiments used in the access control integrity server **156** to perform these integrity checks are described with respect to various embodiments. Some embodiments include comparing device based service usage measures versus the service usage that should result if the desired service policy were properly implemented, comparing device based service usage measures versus the service usage that should result if the desired service policy were properly implemented with device based service usage measures that are executing in the protected DAS partition **114** and/or the modem execution partition **124**, comparing network based service usage measures versus the service usage that should result if the desired service policy were properly implemented, and comparing network based service usage measures with device based service usage measures. In some embodiments, a policy control server **154** stores policy settings for the various service plans that can be implemented on the device, and communicates the appropriate policy settings to the appropriate device DAS agents.

In some embodiments, the service controller **122** has secure access to service measures, service control settings, software images, software security state(s), and/or other settings/functions, for example, by virtue of the hardware enhanced execution partition and the secure channel into the protected DAS partition **114**. For example, the host secure channel **150** can be encrypted employing keys that are public/private or point to point private. Also, other link security, for example, can be implemented as described herein. For example, servers can ensure that the link remains authenticated and information is validated. For example, the service controller can perform one or more of the following verification techniques: compare the monitored service usage versus the policy, compare the monitored service usage versus other service usage measures and/or combined with various other network service usage measures.

In some embodiments, the protected DAS partition **114** includes a host service control link **118** as shown in FIG. **1** that works in combination, that is, in communication with a network service control link **152** to send and receive secure messages between the service controller and the host via a host secure channel **150**. In some embodiments, the protected DAS partition **114** only accepts new program images from the service controller **122** and not from local programs or disks. In some embodiments, the protected DAS partition **114** cannot communicate with other applications and/or kernel programs. In some embodiments, the protected DAS partition **114** can also communicate with other applications and/or kernel programs but only to gather information or to set settings. In some embodiments, the protected DAS partition **114** can also communicate with other applications and/or kernel programs but only through a restricted encrypted communication bus that restricts outside program access to protected programs or agent functions, and can also restrict the agents inside of the protected partition from accepting unauthorized information or code modifications from programs outside the protected partition. Various other security techniques can be provided for the DAS execution environments as will be apparent to one of ordinary skill in the art in view of the embodiments described herein.

In some embodiments, the protected DAS partition **114** is created by employing CPU or APU hardware security features in addition to or in alternative to other software security features (e.g., virtual execution partitions) that can be provided by the operating system and/or other software. In some embodiments, the host hardware security features are provided with the operating system secure kernel operating modes. In some embodiments, the host hardware security features used for secure device assisted service execution partition operation are independent of the operating system kernel (e.g., implemented in secure program partitions in a separate secure program area not directly controlled by the OS and/or software that does not have access to the partitions).

In some embodiments, the hardware security features that support the protected DAS partition **114** include preventing other elements on the device from writing and/or reading certain memory areas reserved for device assisted service agents and/or control link functions. In some embodiments, this memory protection function is accomplished by locating the memory in a secure hardware partition that cannot be accessed by unauthorized device program elements (e.g., a separate bank of isolated memory space within the host CPU). In some embodiments, this memory protection function includes encrypting traffic to and from memory so that only authorized device program elements posses the counterpart encryption capability to access the memory. In some embodiments, the mechanism to access device assisted service agent memory and/or certain data elements is restricted to authorized device assisted service agents and/or

the service controller via the service control link so that unauthorized program elements on the device cannot alter the device assisted service agent code and/or operation.

In some embodiments, the hardware security features that support the protected DAS partition **114** includes preventing unauthorized elements on the device from accessing the protected storage and/or file storage (e.g., "protected storage," such as disk storage, non-volatile memory, embedded non-volatile memory, such as NVRAM, flash or NVROM, securely embedded non-volatile memory, and/or other types of storage) that is used to store the device assisted service agent programs. In some embodiments, this protected storage is maintained within the secure hardware partitions that also execute one or more of the device assisted service agents so that only authorized device assisted service agents have access to the storage locations. In some embodiments, the images that are stored in such protected file storage must be properly encrypted and signed for a boot loader to authorize loading the device assisted service agent programs into execution memory, and in some embodiments, if the images are not properly signed then an access control integrity error is generated and/or the program is not loaded. In some embodiments, such properly signed DAS images can only be obtained from the service controller. In some embodiments, such DAS images can only be loaded into protected file storage by the service controller. In some embodiments, the hardware security features that prevent unauthorized elements on the device from accessing the protected file storage include encrypting all traffic to and from the secure storage so that only authorized device program elements possess the counterpart encryption capability to access the storage. In some embodiments, access or access rights to re-program a device assisted service agent program store is restricted to the service controller via the service control link so that unauthorized program elements on the device are not authorized to alter the device assisted service agent code and/or operation.

In some embodiments, the hardware security features that protect device assisted service agent storage include a protected DAS partition in which an access control integrity agent function is isolated from other device program elements, and a secure service control link is also isolated in a similar manner, and the access control integrity agent scans the execution memory, data memory and/or file storage used by one or more device assisted services agents to measure and/or control services. In some embodiments, the purpose of the scan is to detect changes to the device assisted service agent code and/or data. In some embodiments, the purpose of the scan is to detect other unauthorized program elements or data that may be present in reserved or protected areas used for device assisted service agent execution. In some embodiments, reports of such scan audits are reported over the service control link to the service controller for further processing by use of cloud based resources to identify access control integrity violations. In some embodiments, the access control integrity agent functions include one or more of hashing other device assisted security agents, querying other device assisted security agents, observing the operation of other device assisted security agents or monitoring service measures and then either evaluating the results locally on the device to determine if they are within predefined allowable parameters or sending at least some of the results to the service controller for further analysis via the service control link. In some embodiments, the scan audits are compared with earlier versions of the scans to compare code configuration or operational characteristics. In some embodiments, the scan audits are compared against known databases for the code or operational characteristics that should be present in the DAS agents.

In some embodiments, an access control integrity agent, or a new version of the access control integrity agent can be downloaded by the service controller over the secure service control link. For example, this technique provides for a real time assessment of device service control security state as described above in the event that corruption or compromise of the secure device assisted service agent(s) has occurred. In some embodiments, the access control integrity agent that is downloaded can have a different configuration and/or operation than any agent previously loaded onto the device so that it is difficult or impossible for a hacker or malware to spoof the operation of the agent in a short period of time. For example, by requiring the agent to report security assessments back to the server in a period of time that is typically less than what is required to spoof the agent, the agent will either report back an accurate assessment of device status or will be blocked by a hacker or malware, and both of these conditions can provide the information required to take action if the device assisted services system has been corrupted or compromised.

In some embodiments, the protected DAS partition and/or the modem execution partition can be used to securely store some or all of the device credentials that are used for one or more of device group association, activation, authorization to the access network and/or the DAS network, service level, and service usage accounting and/or billing.

In some embodiments, the modem subsystem also includes DAS elements that strengthen the access control integrity of the DAS system. As shown in FIG. **1**, one or more modems can include, in some embodiments, DAS agent functions labeled modem partition DAS agents **126**. The modem execution partition **124** of the modem sub system #**1** (**125**) of the modem execution partition **124** includes modem partition DAS agents **126** in communication (e.g., secure communication, such as using encrypted communications) with a modem **128** and a modem service control link **130**, which is in communication with the network service control link **152** via the modem secure channel #**1** (**132**), as shown. Also, the modem **128** is in communication (e.g., secure communication, such as using encrypted communications) with the access network #**1** (**136**), which is in communication with the access network service usage **142** and the Internet **140**, which is in communication with a private network **146**, which is in communication with the private network service usage **144**, as shown.

Example embodiments for DAS agent functions that execute in the modem execution partition include modem encryption and modem service usage measures. In other embodiments, the modem execution partition can also include higher level DAS agent functions, such as stack traffic classification, stack manipulation, access control, and/or traffic control. For example, the modem execution partition can also include a full service processor that is fully capable of managing all aspects of service usage measurement and/or service control. It will now be apparent to one of ordinary skill in the art that the modem execution partition can employ a number of the service security embodiments described in the context of the protected DAS partition, for example, to enhance the service integrity of the DAS system. For example, the DAS agents on the modem can be stored in an encrypted and signed format on non-volatile (NV) memory on the modem that is only accessible by the network service control link or by a local secure control link from the protected DAS partition to the modem execution

partition. As shown in FIG. **1**, a separate secure modem control channel (e.g., modem secure channel #**1** (**132**) through modem secure channel #N (**134**)) that is distinct from the host secure control channel **150** is provided. This separate modem control channel can either be implemented over the higher network layers of the device or over the lower access network layer so that special access to access network resources is required to even connect to the modem DAS agents **126** thereby further enhancing service control related security.

In some embodiments, the protected DAS partition provides for performing the DAS agent functions required for parental controls, enterprise WWAN management controls or roaming controls, and/or usage reporting in the protected execution space. In view of the DAS embodiments described herein, it will now be apparent to one of ordinary skill in the art how to implement such protected controls for these various and other application scenarios.

In some embodiments, a protected DAS partition provides for performing a virtual machine (VM) on top of a secure machine. The device application OS that is accessible by software that can be installed without special permissions can be isolated from the secure hardware and/or OS that is running under the VM. Using these techniques, malware can be "cocooned in" on the VM OS rather than "walled out" as discussed with respect to various embodiments described herein.

In some embodiments, communication between program/functional elements outside of the protected DAS partition to DAS agents inside the protected DAS partition is controlled by a secure encrypted channel. In some embodiments, only programs/functions that have access to communicate with DAS agents are allowed to do so, and, in some embodiments, even these outside programs are not allowed to modify the DAS agent configuration, only to report information and/or receive information.

For example, various embodiments can be used to connect to multiple access networks through multiple modems, with each modem potentially being associated with a different set of DAS service policies corresponding to the different types of access networks supported. In some embodiments, such as for 3G/4G modems, WWAN/WLAN modems, and various other multiple modem embodiments, the multiple modems can also be provided on the same multi-mode modem subsystem rather than on different modem subsystems.

In some embodiments, the various techniques and embodiments described herein can be readily applied to intermediate networking devices as will now be apparent to one of ordinary skill in the art. For example, an intermediate networking device can includes some or all of the DAS agents for managing, controlling, and/or measuring service usage for one or more devices in communication with a wireless network via the intermediate networking device, in which the DAS agents can be executed in secure execution environments or secure execution partitions using the various techniques described herein. In some embodiments, intermediate networking devices include, for example, WWAN/WLAN bridges, routers and gateways, cell phones with WWAN/WLAN or WWAN/Bluetooth, WWAN/LAN or WWAN/WPAN capabilities, femto cells, back up cards for wired access routers, and other forms/types of intermediate networking devices.

FIG. **2** illustrates another secure execution environment **200** for device assisted services in accordance with some embodiments. In particular, FIG. **2** illustrates an embodiment in which DAS agents do not actually replace the OS network stack elements, but instead one or more DAS agents include device driver programs that interface into the network stack and pass (e.g., securely communicate) traffic information or actual traffic back and forth with the stack. These device driver interface constructs are labeled OS driver framework and interface **208** as shown in FIG. **2**. Example OS system constructs that provide for this type of architecture for DAS agents include Windows NDIS and/or TDI drivers, Windows Filter Platform (WFP), Berkeley Packet Filter, ipfw (e.g., a BSD packet filter that can be used for various OSs, such as Unix, Linux, MAC OS), and/or other platforms/programs performing these or similar functions. While these OS stack options are not secure in themselves, if the drivers that interface with them are secured as illustrated in FIG. **2** by executing the drivers in the protected DAS partition **214**, then higher overall access control integrity/security levels can be achieved.

As shown in FIG. **2**, the service measurement and/or policy control drivers **210** executed in the protected DAS partition **214** represent the DAS drivers that interface to the OS stack device driver interface constructs labeled OS driver framework and interface **208** executed in the kernel execution partition **212**, which are in communication with/interface with OS Stack API(s) **207**. As also shown, applications, such as applications **106**A through **106**C execute in the application execution partition **202**. In some embodiments, service access control integrity is further enhanced by placing additional measurement points outside of the network stack, so that, for example, if the network stack service usage reporting is hacked, corrupted, and/or compromised, there is a secure additional or back-up service measure located on the device and/or in the network (e.g., modem agent **226** as shown in FIG. **2**, which provides a service measurement point in the modem for measuring service usage by the device, and as shown also provides for secure communication with the modem agent **226** using modem encryption **225**). For example, the service measure provided by the modem agent **226**, modem encryption **225**, and/or modem bus **120** functions shown in FIG. **2** can be executed in a protected partition (e.g., modem execution partition **124** as shown in FIG. **2** can be implemented as a secure or protected partition using the various techniques described herein).

FIG. **3** illustrates another secure execution environment **300** for device assisted services in accordance with some embodiments. As shown, some stack elements are executed in the kernel execution partition **312** and some stack elements are executed in the protected DAS execution partition **314**. In some embodiments, the DAS agents **104** executed in the application execution partition **302** are directly monitoring and/or controlling stack traffic by intercepting it and imposing additional traffic measurement and/or filtering. Examples of such techniques are described herein with respect to various embodiments. As shown in FIG. **3**, the network stack elements **308** are the OS stack elements that reside in the kernel execution partition **312** and the protected DAS network stack elements **310** are the stack elements that reside in protected DAS execution partition **314**. For example, as some or potentially all of the stack network traffic processing resides in the protected DAS execution partition **314**, a high level of service control integrity can be maintained using these techniques. For example, the modem bus driver **121** can be executed in a secure execution partition, such as modem execution partition **324**, which can be implemented as a secure execution partition using the various techniques described herein, or the modem bus driver **121** can be executed in the protected DAS execution

partition **314**, so that unauthorized programs can be blocked from accessing the access network through the modem.

In some embodiments, the entire stack is executed in the protected DAS execution partition **314** with only a stack API executing in kernel execution partition **312**. Various other embodiments involve implementing a minimum (e.g., in terms of a number of agents and/or functionality) in the protected DAS execution partition **314** required to secure a service measure that can be used to confirm the integrity of the service policy implementation (e.g., as described with respect to various other embodiments disclosed herein). As will now be apparent to one of ordinary skill in the art, various combinations of stack processing functions can be implemented in a secure host execution partition to strengthen the service measurement and/or service control integrity of the DAS system using the techniques and/or similar techniques to the various techniques described herein.

In some embodiments, the stack elements implemented in the protected DAS execution partition can include stack API, sockets layer, TCP, UDP, service measurements at one or more points in the stack, IP layer processing, VPN/IPSEC, PPP, access control, traffic classification, traffic queuing, traffic routing, traffic QOS, traffic demand reporting to QOS allocation servers, traffic statistics reporting to the QOS servers, traffic QOS reservation requests including by traffic type or app type or service priority to the servers, traffic throttling, traffic statistics gathering, traffic QOS priority identification, modem drivers, modem data encryption, and/or other stack element functionality or features.

In some embodiments, the above discussed service control mechanisms are controlled by policy commands received over the service control link from the servers or other authorized network elements. In some embodiments, the device also reports usage measures to servers or other authorized network elements. In some embodiments, the device also reports QOS demand to the servers or other authorized network elements and/or accepts QOS instructions from the servers or other authorized network elements. In some embodiments, the device reports traffic statistics, projected traffic demand, application usage, projected QOS demand can all be reported to the servers or other authorized network elements for the purpose of provisioning the right amount of data bandwidth and traffic priority to the device, and the servers or other authorized network elements aggregate such reports from many different devices to project needed allocations across the entire network and make global bearer channel level or base station level decisions bearer channel allocation and bearer channel QOS allocation decisions, which can also be tied into a bearer channel provisioning, or bearer channel QOS provisioning apparatus or other authorized network elements located in the access network.

For example, as will now be apparent to one of ordinary skill in the art in view of the various embodiments described herein, additional security measures, can be added in some embodiments to augment the secure service partitioning, including, for example, access control integrity checks. For example, in addition to the service control policy instructions that can be received from the servers or other authorized network elements, an intermediate policy control agent can be present to make additional higher level decisions on how instantaneous policy should be implemented.

As shown in FIG. **3**, the modem control link, shown as modem local channel **330**, provides a link from local connection to the host service control link **118**, which in turn connects through the host secure channel **150** to the service controller **152**. This communication channel can also be implemented or configured to provide for encrypted communication and, in some embodiments, can be used as an alternative to the direct connection from the modem service control link to the network service control link as disclosed with respect to other figures and various embodiments as described herein.

As shown in FIG. **3**, the final stack elements that feed or communicate with the modem bus driver **121** are the protected DAS network stack elements **310** located in the protected DAS execution partition **314** (illustrated as a solid line in FIG. **3**), or, in some embodiments, can be the network stack elements **308** located in the kernel execution partition **312** (illustrated as a dashed line in FIG. **3**). In some embodiments, these final stack elements feed or communicate with the modem subsystem **125**. In some embodiments, the modem subsystem **125** includes an encrypted link so that the stack elements **310** in the protected DAS execution partition **314** can communicate with the modem **128** but other software programs or hardware elements cannot, for example, thereby preventing the service measures and/or controls from being inappropriately bypassed or otherwise comprised. For example and as similarly discussed above, the modem subsystem **125**, for example, can include its own the protected execution partition using various techniques described herein. The modem protected execution partition, for example, can also include a service measure (e.g., modem agent **226** can provide such a service measurement point in the modem subsystem **125**, as similarly described above with respect to FIG. **2**) to increase service control integrity verification as depicted by service measure. The modem service measure can be included in protected execution partition that can only be accessed by the service controller **122** by way of the modem local channel **330**, or the modem service measure can only be accessed by another DAS agent **310** in protected execution partition **314**. In some embodiments, the modem local channel **330** is implemented as a secure channel (e.g., an encrypted communication channel between the modem service control link **130** and the host service control link **118**). As described herein, the modem driver can reside in protected service execution environment, or the modem traffic can be encrypted within service execution environment. For example, the encryption settings can be controlled by various secure control servers.

FIG. **4** illustrates another secure execution environment **400** for device assisted services in accordance with some embodiments. In particular, FIG. **4** illustrates a direct stack manipulation option performed by the DAS agents executed in the protected DAS execution partition **414**, including, as shown, an app(lication) identify agent **420**, an access control integrity agent **422**, a policy control agent **424**, a policy implementation agent **426**, a service measure/service monitoring agent **428**, a modem encryption agent **430**, and a bus driver **432**. For example, the policy implementation agent **426** performs access control and/or traffic shaping according a set of service control policies. The service control policies, for example, can be set by the service controller **122** or by the service controller **122** in coordination with the policy control agent **422**. As shown the app identify agent **420** is in communication with the various applications **106**A through **106**C executed in the application execution partition **402**. As also shown, the various applications **106**A through **106**C executed in the application execution partition **402** are in communication with the OS stack and/or stack API(s) **408** executed in the kernel execution partition **412**.

In some embodiments, the protected service measure agent **428**, the modem encryption agent **430**, the modem

driver agent **432**, the application identifier agent **420**, the access control integrity agent **422**, and the policy control agent **424** are all implemented in protected DAS partition **414**, as shown. In some embodiments, as will now be apparent to one of ordinary skill in the art, a subset of these functions can be implemented in a protected execution partition, such as the protected DAS partition, in various circumstances.

FIG. **4** also similarly shows various embodiments that are available for network based service usage measures and interfacing to the mediation and billing systems, and it should be understood that any or all of the embodiments and figures can be employed in the context of carrier networks, MVNOs, private networks, or open networks supporting enterprise IT manger controls, parental controls, multi-network controls, and/or roaming controls.

FIG. **5** illustrates another secure execution environment **500** for device assisted services in accordance with some embodiments. In particular, FIG. **5** is similar to that FIG. **4** except that FIG. **5** illustrates a modem service control link **132** that is connected directly to the service controller **122** via the network service control link **152** (e.g., via a modem secure channel). In some embodiments, a modem control link for DAS is established locally on the device or through an entirely different control channel, which, in some embodiments, provides enhanced security as discussed herein (e.g., it is very difficult to hack a service usage measure or service control that cannot be accessed on the device).

FIG. **6** illustrates another secure execution environment **600** for device assisted services in accordance with some embodiments. In particular, FIG. **6** illustrates a policy implementation agent **616** that includes the entire networking stack running in protected execution partition **614** and an OS stack API **608** that includes an application identifying function **620** in the kernel execution partition **612**.

FIG. **7** illustrates another secure execution environment **700** for device assisted services in accordance with some embodiments. In particular, FIG. **7** illustrates DAS agents that do not replace the OS network stack elements, but instead one or more DAS agents are comprised of device driver programs that interface into the network stack and pass traffic information or actual traffic back and forth with the stack. These device driver interface constructs are labeled OS driver framework and interface **722** in FIG. **7** as similarly shown in and described with respect to FIG. **2**, along with OS stack API **708**, which includes application identifier function **720** as similarly discussed above with respect to FIG. **6**, and are executed in kernel execution partition **712**. Also, as shown, application partition DAS agents **104** are executed in application execution partition **702**. The main difference between the embodiment in FIG. **7** and that shown in and described with respect to FIG. **2** is that the service measure agent **428**, modem encryption agent **430**, and modem driver agent **432** are executed in the protected DAS partition **714**, as shown in FIG. **7**. For example, this provides for enhanced service control security as described herein with respect to various embodiments.

FIG. **8** illustrates another secure execution environment **800** for device assisted services in accordance with some embodiments. In particular, FIG. **8** illustrates a more simplified embodiment that is similar to that of FIG. **7**. In FIG. **8**, only an access control integrity agent **422** and a service measure **428** are executed in protected DAS partition **814**, and the bus driver **432** and the service measurement and/or policy control drivers **210** are executed in the kernel execution partition **712**. This embodiment illustrates that provided that at least one protected service measure is provided on the device, then the DAS service control integrity can be very high. For example, if it is not possible to access the program code or control traffic for the service measure agent **428**, and the host service control link **118** except through the encrypted control channel from the service controller **122**, then this simplified configuration can be almost as secure as that possible with network based service measures. It will now be apparent to one of ordinary skill in the art that this technique similarly applies to a service measure and control link similarly implemented in a protected modem execution partition **324**. In some embodiments, the access control integrity agent **422** provides additional security, for example, in the event that the protected DAS partition **814** is breached or compromised.

FIG. **9** illustrates another secure execution environment **900** for device assisted services in accordance with some embodiments. In particular, FIG. **9** illustrates an embodiment similar to that of FIG. **8** except that, in particular, in addition to the service measure being executed in protected DAS partition **914**, the modem encryption agent **430** is also implemented in/executed in the protected DAS partition **914**. For example, this prevents unauthorized software from defeating the service measurements and/or service controls by going around the network stack directly to the modem.

FIG. **10** illustrates another secure execution environment **1000** for device assisted services in accordance with some embodiments. In particular, FIG. **10** illustrates an embodiment similar to that of FIG. **9** except that, in particular, there are additional app partition DAS agents **104** executing in the application execution partition **702**. For example, this illustrates that some DAS agents can be implemented in application space (e.g., UI agent, policy control agent, and various other DAS agents as described herein) while still maintaining a high level of service measurement and/or control security as long as there are a few key measures and/or controls implemented in protected execution partitions using the various techniques described herein.

FIG. **11** illustrates another secure execution environment **1100** for device assisted services in accordance with some embodiments. In particular, FIG. **11** illustrates how the server cloud can be assisted by the on board access control integrity agent to detect tampering with other service measurement(s) and/or control agent(s), or to protect the service measurement and/or control system from being attacked by malware and/or otherwise comprised. As shown, the access control integrity agent **422** executes inside the protected DAS partition **1114** and is in communication with file storage **1130** (e.g., for persistently maintaining device status and/or other settings or status or monitoring information). The access control integrity agent **422** performs the various access control integrity check functions as, for example, described herein with respect to various embodiments, and, in some embodiments, in coordination with the servers over the secure control channel (e.g., host secure channel **150**). In some embodiments, the access control integrity agent **422** can send the service controller **122** information about the other service measurements and/or control agents so that the service controller **122** can determine if the agents are working properly or have been tampered with or otherwise compromised. For example, such information can include sections of code, hashes, code segments, code variations from a previous image, code variations from a historical image, responses to queries, checksums, observations of operating behavior or patterns, service usage, policy implementation behavior, and/or other information that may be indicative of tampering, corruption, and/or a compromise of

any of the device agents/measures. In some embodiments, the access control integrity agent **422** checks the operating environment for signs of malware signatures, or sends application and/or driver information or other information about the operating environments to the servers for further processing to detect malware. In some embodiments, the access control integrity agent **422** performs basic operations on protected DAS partition memory, kernel execution partition memory areas, application execution partition memory areas, on disk storage areas or on other file storage areas to detect known malware hashes or signatures, etc., or the access control integrity agent **422** can send the hashes to the servers for comparison against malware databases (e.g., to compare against signatures for known malware or for further behavioral based or other security/malware detection techniques).

In some embodiments, the DAS system is implemented in a manner that is robust to losses in service control link (e.g., coverage outages on a WWAN link or loss of connection on a wired link). In some embodiments, the DAS system to be implemented in a manner that is robust to one or more server elements in the service controller going offline or failing for any reason. The following embodiments facilitate these techniques, as described below.

In some embodiments, it is advantageous for one or more of the device assisted service agents to maintain a record of the service usage reports and/or other reporting that is provided to the service controller regarding device service control state (e.g., present service plan settings, current service usage policy settings, current user preference settings, current DAS settings, current encrypted control channel and/or local encrypted communication channel key information, current DAS agent status reports, current DAS agent security state reports, current ambient service usage and/or transaction records, current service control integrity threat reports, user status information, device status information, application status information, device location, device QOS state, and/or other state and/or settings information). In addition to such information that exists on the device and is reported to the service controller, additional service information can be derived and recorded in the service controller, such as information received from outside the device and/or analysis of the device reported information (e.g., network based service usage measures, analysis of device service usage, comparison of device reports with other information, analysis of access control integrity agent reports, information received from roaming networks, information input to the service controller from parental control terminals, enterprise control terminals, virtual service provider control terminals, access network authorization information, service integrity violation level, and many other types of information used to properly measure and/or control the device services). For example, the information reported from the device and received or derived outside the device that is required to adequately define the actions needed from the service controller to maintain proper DAS system operation is sometimes referred to herein as the "device service state."

In some embodiments, the service controller functions are highly scalable and can be executed on a number of hardware and software platforms (e.g., different virtual machines in a server, different servers in a data center, or different servers located in different data centers). For example, in such embodiments the service controller can be designed so that the programs that execute the various service controller server functions can derive all of the information necessary to properly manage the device at any moment in time by knowing past device service state and current service state that adequately define the next set of actions the service controller needs to implement to properly maintain the DAS system operation. By designing the system in this way, if the server that is running the service controller server functions for any given device in question were to go down or become disconnected from the device, then another server could later resume proper operation of the DAS system by assigning another service controller server function to the device and recovering or restoring the necessary past device service state and the necessary current device service state.

For example, this can be accomplished in some embodiments as described below. The service controller saves the current device service state into a common database (e.g., which can be centralized or distributed) that is available to all service controller server functions. The device service state is saved each time the device communicates with the service controller, or at regular time intervals, or a combination of both. The device retains its current and past service state reports even after they are reported at least until the service controller sends the device a message confirming that the service controller has saved a given device service state. Once the device receives this save confirmation for a given device state report then it is no longer required to retain that particular device state report once the device has no further use for it. In this manner, if a service controller server function goes down then a save confirmation for one or more reported device states is not transmitted to the device by the service controller, and the device can retain that report. A server load balancer detects that a given service controller server function has gone down, looks up the devices that were being controlled by that service controller server function, finds that the device in question was one of those devices and re-assigns a new service controller server function (either in the same data center or in another data center) to control the device in question. The newly assigned service controller server function then recovers all past device states that were recorded in the service controller database and are required to properly manage the DAS system, and then asks the device to transmit or re-transmit all device state reports that were not saved in the service controller database. Once the device transmits or re-transmits the requested information, the newly assigned service controller function then has the information it needs to properly manage the DAS system, it saves all the reported device state information, and then sends save confirmations to the device so that the device need no longer retain the older service state reports. The newly assigned service controller server function can then resume the DAS system operation with a set of actions that are identical or very similar to the actions that would have been taken by the original service controller server function if it had not gone down. One of ordinary skill in the art will now appreciate that the above techniques can also be used to accommodate temporary losses in the connection between the device and the service controller. For example, such techniques provide for a highly scalable and robust approach to implement a distributed service controller across multiple data centers for reliable service redundancy. In some embodiments, the past device service state information is saved in the protected DAS execution partition and/or the modem execution partition, for example, so that it is protected from corruption.

Although the foregoing embodiments have been described in some detail for purposes of clarity of understanding, the invention is not limited to the details provided.

There are many alternative ways of implementing the invention. The disclosed embodiments are illustrative and not restrictive.

INCORPORATION BY REFERENCE

This application incorporates the following provisional and nonprovisional U.S. patent applications by reference: application Ser. No. 12/694,445, filed Jan. 27, 2010, entitled SECURITY TECHNIQUES FOR DEVICE ASSISTED SERVICES; application Ser. No. 12/380,780, filed Mar. 2, 2009, entitled AUTOMATED DEVICE PROVISIONING AND ACTIVATION; application Ser. No. 61/206,354, filed Jan. 28, 2009, entitled SERVICES POLICY COMMUNICATION SYSTEM AND METHOD; provisional Application No. 61/206,944, filed Feb. 4, 2009, entitled SERVICES POLICY COMMUNICATION SYSTEM AND METHOD; provisional Application No. 61/207,393, filed Feb. 10, 2009, entitled SERVICES POLICY COMMUNICATION SYSTEM AND METHOD; provisional Application No. 61/207,739, filed Feb. 13, 2009, entitled SERVICES POLICY COMMUNICATION SYSTEM AND METHOD; and provisional Application No. 61/252,151, filed on Oct. 15, 2009, entitled SECURITY TECHNIQUES FOR DEVICE ASSISTED SERVICES.

What is claimed is:

1. A method of operating a wireless end-user device, the method comprising:

connecting from a secure modem subsystem to a wireless cellular network;

connecting a first secure control channel from the secure modem subsystem through the wireless cellular network to a network service controller;

connecting a second secure control channel from a secure execution environment, separately secure from the secure modem subsystem, through the secure modem subsystem and the wireless cellular network to the network service controller;

receiving at the secure execution environment, via the second secure control channel, one or more messages from the network service controller, the one or more messages comprising one or more service policy settings;

storing the one or more service policy settings in a secure memory partition accessible only from the secure execution environment; and

enforcing, at least in part from the secure execution environment, a network service profile comprising the one or more service policy settings, to control the wireless end-user device use of a service on the wireless cellular network.

2. The method of claim **1**, wherein the network service profile is associated with a service plan that provides for access to the service on the wireless cellular network.

3. The method of claim **1**, wherein the secure modem subsystem comprises a modem control link and a modem local channel, and the first secure control channel connects the modem control link to the network service controller through the modem local channel, and wherein the secure execution environment comprises a host service control link, the second secure control channel coupled to the host service control link, the modem local channel providing secure communication between the modem control link and the host service control link.

4. The method of claim **1**, wherein the secure modem subsystem further comprises a modem agent accessible only by the network service controller through the first secure control channel.

5. The method of claim **4**, wherein the modem agent comprises a service measurement point for use of the service.

6. The method of claim **5**, further comprising the modem agent communicating a first report of the use of the service to the network service controller through the first secure control channel.

7. The method of claim **6**, further comprising the secure execution environment separately communicating a second report of the monitored use of the service through the second secure control channel.

8. The method of claim **1**, wherein the one or more service policy settings include an access control setting, a traffic control setting, and/or an admission control setting.

9. The method of claim **1**, wherein the one or more service policy settings include a network or device management communication setting.

10. The method of claim **1**, wherein the secure execution environment is implemented at least in part as a hardware partition.

11. The method of claim **1**, wherein the secure execution environment is implemented at least in part as a software partition.

12. The method of claim **1**, wherein the secure execution environment is implemented at least in part in a virtual machine executed on a processor.

* * * * *