IN THE UNITED STATES DISTRICT COURT
FOR THE WESTERN DISTRICT OF TEXAS
MIDLAND/ODESSA DIVISION

HEADWATER RESEARCH LLC, *Plaintiff*, v. GOOGLE LLC, *Defendant*.	Case No. 7:25-CV-00369 **JURY DEMANDED**

PLAINTIFF HEADWATER RESEARCH LLC'S
RESPONSIVE CLAIM CONSTRUCTION BRIEF

GOOGLE EXHIBIT 1014
Google v. Headwater
IPR2026-00442

TABLE OF CONTENTS

I. INTRODUCTION 1

II. ARGUMENT 1

A. "Subscriber [Information/Identity] Module (SIM)" (Patent 9,609,510 claims 22 and 24; Patent 8,639,935 claim 10; Patent 11,096,055 claim 11; Patent 11,985,155 claims 3, 12) 1

1. The Intrinsic Record Does Not Tie "SIM" to Any Particular Industry Standard or Standards Document 2

2. Google's Proposed Construction Runs Contrary to Established Case Law 4

3. Google's Extrinsic Evidence Cannot Supply a Standards-Compliance Limitation Missing from the Intrinsic Record 8

B. Preamble of Claim 10 of the '155 Patent 9

1. The Additional Descriptive Clause in the Preamble Is Not Limiting Because Claim 10's Body Is Structurally Complete and Never Uses That Characteristic 10

2. Google's "Structural Limitation" Theory Improperly Imports One Embodiment and Ignores the Patentee's Claim Drafting Choices 11

III. CONCLUSION 13

TABLE OF AUTHORITIES

Cases

Allen Eng'g Corp. v. Bartell Indus., Inc.,
299 F.3d 1336 (Fed. Cir. 2002) 10

Bio-Rad Labs., Inc. v. 10X Genomics Inc.,
967 F.3d 1353 (Fed. Cir. 2020) 11

Catalina Mktg. Int'l, Inc. v. Coolsavings.com, Inc.,
289 F.3d 801 (Fed. Cir. 2002) 1, 10

Cellspin Soft, Inc. v. Fitbit, Inc.,
No. 4:17-cv-05928, 2021 WL 1417419 (N.D. Cal. Apr. 14, 2021)..... 5, 6

Celltrace LLC v. AT & T Inc.,
No. 6:09-cv-294-LED-JDL, 2011 WL 738927 (E.D. Tex. Feb. 23, 2011) 5

Chrimar Sys, Inc. v. Alcatel-Lucent USA, Inc.,
No. 6:15-cv-163-JDL, 2016 WL 1228767 (E.D. Tex. Mar. 28, 2016)..... 7

Extreme Networks, Inc. v. Enterasys Networks, Inc.,
No. 07-C-229-C, 2007 WL 5601497 (W.D. Wis. Nov. 21, 2007) 8

Fundamental Innovation Sys. Int'l LLC v. Samsung Elecs. Co.,
No. 2:17-cv-145-JRG-RSP, 2018 WL 647734 (E.D. Tex. Jan. 31, 2018) 6, 7

Innogenetics N.V. v. Abbott Labs.,
512 F.3d 1363 (Fed. Cir. 2008) 5

Marrin v. Griffin,
599 F.3d 1290 (Fed. Cir. 2010) 11, 13

PC Connector Sol'ns LLC v. SmartDisk Corp.,
406 F.3d 1359 (Fed. Cir. 2005) 2, 7

Phillips v. AWH Corp.,
415 F.3d 1303 (Fed. Cir. 2005) 2, 8

Pitney Bowes, Inc. v. Hewlett-Packard Co.,
182 F.3d 1298 (Fed. Cir. 1999) 10

Soverain Software LLC v. Amazon.com, Inc.,
No. 6:04-cv-14, 2005 WL 6225276 (E.D. Tex. Apr. 7, 2005) 6

Symantec Corp. v. Computer Assocs. Int'l, Inc.,
522 F.3d 1279 (Fed. Cir. 2008) 1

TomTom, Inc. v. Adolph,
790 F.3d 1315 (Fed. Cir. 2015) 11

* All emphasis added unless otherwise specified.

I. INTRODUCTION

Google asks the Court to rewrite the claim term "SIM" by importing selected features from extrinsic ETSI/3GPP standards documents the patents never cite, incorporate, or adopt in the specification or claims. Google's proposed construction does not merely reflect claim meaning as of the relevant priority dates; it adds a standards-compliance limitation and "removability" and "portability" requirements not found in the claim language, the specifications, or the prosecution histories. *See, e.g.*, Dkt. 77 at 6-7. The proper inquiry is not whether the claims are time-fixed, as Google frames the issue, but whether Google may substitute extrinsic standards for the words in the patent. Google's construction should be rejected.

Google likewise seeks to convert an additional descriptive clause in the preamble of claim 10 of the '155 patent—"configured to be inaccessible to a user application software"—into a claim limitation. Dkt. 77-8 at claim 10. But claim 10's body already recites a structurally complete method and never invokes that additional descriptive clause. Under the settled rule that preamble language is not limiting where the claim body defines a complete invention and the preamble language merely supplies context, intended use, or other nonessential description, the disputed clause should not be treated as limiting. *See Catalina Mktg. Int'l, Inc. v. Coolsavings.com, Inc.*, 289 F.3d 801, 808 (Fed. Cir. 2002); *Symantec Corp. v. Computer Assocs. Int'l, Inc.*, 522 F.3d 1279, 1288 (Fed. Cir. 2008).

II. ARGUMENT

A. "Subscriber [Information/Identity] Module (SIM)" (Patent 9,609,510 claims 22 and 24; Patent 8,639,935 claim 10; Patent 11,096,055 claim 11; Patent 11,985,155 claims 3, 12)

Headwater's Proposed Construction	Google's Proposed Construction
No construction is necessary, the term should be given its plain and ordinary meaning	Subscriber Identity Module as described in the ETSI/3GPP standards in existence at the time of the claimed invention

Google attempts to frame the dispute as one of whether claim meaning is assessed as of the effective filing date. Dkt. 77 at 1, 3. There is no dispute in that regard, as Headwater agrees with the claim construction canon that claims are interpreted as of their filing date. But *PC Connector* does not authorize importing the contents of extrinsic standards documents found nowhere in the claims, specification, or prosecution history. *PC Connector Sol'ns LLC v. SmartDisk Corp.*, 406 F.3d 1359, 1363 (Fed. Cir. 2005). This is what Google seeks to do here, by relying on an expert declaration and other extrinsic evidence to depart from the plain meaning definition. Google's construction should be rejected as an improper importation of an extrinsic standard.

1. The Intrinsic Record Does Not Tie "SIM" to Any Particular Industry Standard or Standards Document

Across the four patents at issue, Google identifies no claim language, specification passage, or prosecution statement defining "SIM" by reference to any industry standard. Google instead relies on two extrinsic standard documents—ETSI/3GPP TS 31.101 ("UICC-terminal interface; physical and logical characteristics," Google Ex. 14 (Dkt. 77-15)) and TS 31.102 ("Characteristics of the universal subscriber (USIM) application," Google Ex. 15 (Dkt. 77-16))—that are nowhere cited in the asserted patents. Under Google's proposal, the claim term would be tied to extrinsic documents the patentees never mentioned. And even those documents address the UICC physical platform and the USIM application; they do not supply the clear intrinsic basis Google would need to redefine "SIM" as a standards-compliance term.

The Court should not jump directly to Google's extrinsic evidence because it is inherently biased, less reliable than intrinsic evidence, and not part of the patent history. *Phillips v. AWH Corp.*, 415 F.3d 1303, 1317 (Fed. Cir. 2005) ("However, while extrinsic evidence 'can shed useful light on the relevant art,' we have explained that it is 'less significant than the intrinsic record in determining 'the legally operative meaning of claim language.'"). The challenged claims do not

refer to any standard, standards document, or standards-setting body (e.g., ETSI, 3GPP). There is simply nothing in the claims indicating that the patentee intended to limit the claims to a particular standard. And to the extent Google's repeated reference to SIM *cards* in its brief is intended to imply that the claimed inventions should be limited to physical SIM cards, that is belied by the intrinsic record. The claims plainly do not recite any card, even though each patent's specification mentions SIM cards but describes SIM more broadly. *See, e.g.*, Dkt. 77-2 ('935 patent) at 31:11; Dkt. 77-3 ('510 patent) at 5:58; Dkt. 77-5 ('055 patent) at 31:31; Dkt. 77-8 ('155 patent) at 7:45. If the patentee had intended for the claim term "SIM" to refer to a physical SIM card, the claims would have said so. That they do not demonstrates that the claims are not limited as Google suggests.

Indeed, the intrinsic specifications use "SIM" in the ordinary technological sense, not as a defined reference to any particular standard or standards document. Like the claims, the specifications do not refer to any SIM-related standard, standards document, or standards-setting body. And in fact, the shared specification of the '935 patent (Dkt. 77-2) and '055 patent (Dkt. 77-5) refers to standards in other contexts, such as "standardized interfaces such as USB" but tellingly do not with respect to SIM. *See, e.g.*, Dkt. 77-2 ('935 patent) at 30:42-46 (describing how certain elements "can be packaged in a small form factor that may have standardized interfaces such as USB, PCIe, firewire, Display Port, GPIO, or other interface"). The fact that the asserted patents refer to standards in some contexts but specifically do not refer to any SIM standard only further shows that Google's proposal should be rejected. Rather than referring to any SIM-related standards, the asserted patents describe SIM more broadly. For example, "SIM" is referenced in the specification of the '155 patent (Dkt. 77-8) as "a system for secure DDRs [device data records that] includes … a secure execution environment," which in some embodiments "is located in an

application processor, in a modem processor, and/or in a subscriber identity module (SIM).” Dkt. 77-8 (’155 patent) at Abstract; *see also id.* at 4:12–16. “SIM” is also described “logically” by its security function as an “independent hardware module (e.g., a part of a secure execution environment),” and not by compliance with any particular standard. *Id.* at 38:16-20. SIM is also listed as an example of “any device processing element” such as a “video processor, audio processor, display processor, etc.” *Id.*

Google principally relies on the ’935 patent and the fact that it mentions both “SIM” and “USIM,” but it does not support the weight Google places on it. A reference to “Subscriber Identity Module (SIM) or Universal Subscriber Identity Module (USIM)” shows only that the patentees used familiar technological terminology; it does not show that they intended to tie the claim term to particular ETSI/3GPP specification documents or to a removability requirement. If anything, the patent family’s use of both “subscriber identity module (SIM)” and “subscriber information module (SIM)” underscores that the patents use “SIM” at a functional, technological level rather than as tied to any extrinsic standard. *See, e.g.*, ’510 patent (Dkt. 77-3) at 5:27-28, claims 22, 24.

Google also does not identify any prosecution history statement disclaiming claim scope or defining “SIM” by reference to ETSI/3GPP standards. The absence of any such statement further confirms that Google’s construction is not rooted in the intrinsic record.

2. Google’s Proposed Construction Runs Contrary to Established Case Law

Google’s cited cases do not even establish that a claim term should be interpreted in light of an industry standard if that standard is referenced in the specification—which is not even the case here. The relevant case law is on Headwater’s side, not Google’s.

For example, to the extent Google’s assertion is that eSIM is an after-arising technology that must fall outside the scope of the dependent claims reciting “SIM,” the Federal Circuit has

made clear that after-arising technologies can be "captured within the literal scope of valid claims that are drafted broadly-enough." *Innogenetics N.V. v. Abbott Labs*., 512 F.3d 1363, 1371-72 (Fed. Cir. 2008). For example, in *Celltrace*, the court rejected the argument that the claim term "GSM-compatible" should be limited to "the meaning that a person of ordinary skill in the art in question at the time of the invention … would interpret 'GSM-compatible' to mean." *Celltrace LLC v. AT&T Inc*., No. 6:09-cv-294-LED-JDL, 2011 WL 738927, at *15 (E.D. Tex. Feb. 23, 2011). The court explained:

> The claim language of the '933 patent is broad enough to include after-arising GSM standards because the patent does not recite any of the limitations found in the *KopyKake* patent. *See, e.g.,* '933 patent at 6:45 (Claim 1); 7:28 (Claim 9). The claims make no reference to "conventional means," nor do they contain language to indicate that the invention is limited to then-existing GSM standards. *See SuperGuide,* 358 F.3d at 879. Therefore, the language of the claims are sufficiently broad and may include after-arising GSM standards. Consequently, the term "GSM-compatible" is not limited to the GSM standards of 1993.

Id. at *16. The same is true here, because the patents at issue contain no limiting words like "conventional" or "traditional" that could restrict the meaning of "SIM" to only how that term was used in a particular standards document.

As another example, in *Cellspin*, the court rejected the defendant's argument that claim terms reciting "Bluetooth" (e.g., "Bluetooth enabled data capture device") were limited to versions of Bluetooth that were available at the time of invention. *Cellspin Soft, Inc. v. Fitbit, Inc.,* No. 4:17-cv-05928, 2021 WL 1417419, at *9-10 (N.D. Cal. Apr. 14, 2021). The court explained:

> On balance, the Court finds that the better view is to not limit technical standards to any version. Defendants seek, in effect, a "standards" exception where technologies described by a technical specification are limited to particular versions. They acknowledge, however, that this would not be appropriate for other terms. For instance, Defendants do not argue that a "mobile device" recited in the claims should be limited to devices that existed in 2007 (e.g., the original iPhone). (Tr. at 21:20-22:10.) That rule makes sense because limiting technologies to a specific time would defeat infringement through differences that have no bearing on a person of ordinary skill in the art's understanding of a term--e.g., a car is no less of a car because it uses ignition in place of the original crank.

Id. at *10. Likewise, the claims here should not be limited to a pre-patent standards document, especially given that the patents here do not even mention, much less claim, a standardized SIM.

As another example, in *Soverain Software LLC v. Amazon.com, Inc.*, No. 6:04-cv-14, 2005 WL 6225276, at *4-5 (E.D. Tex. Apr. 7, 2005), the court found "hypertext transfer protocol" to be "a generic term not limited to the version in use at the time the application was filed," because the plaintiff was "not claiming to have invented HTTP, but only that the methods described use HTTP." *Id.* at *5. As in *Soverain*, Headwater does not claim to have invented SIM but rather claims, as an additional limitation of the challenged dependent claims, that the claimed invention includes a "subscriber identity module" (or "subscriber information module" in the case of the '510 patent (Dkt. 77-3)).

Google's cited authorities only further confirm why its construction fails here. Google first refers to *Fundamental Innovation* (Dkt. 77 at 3), but in that case the patent repeatedly described the claim term "USB" as being tied to the industry-standard USB specification—so the court had intrinsic evidence tying the disputed term to a particular standard. *See, e.g.*, *Fundamental Innovation Sys. Int'l LLC v. Samsung Elecs. Co.*, No. 2:17-cv-145-JRG-RSP, 2018 WL 647734, at *10 (E.D. Tex. Jan. 31, 2018) ("the Summary section of the written description indicates that the patentee used the term 'USB' to refer to a particular 'industry standard'"). The court recited numerous specification excerpts providing intrinsic evidence that the claim term "USB" was intended to refer to a specific industry standard. *See, e.g.*, *id.* ("an exemplary mobile communication device 10 which has an *industry standard* interface," "*an industry standard interface 18 which in this example is a USB port*," "An adapter for providing a source of power to a mobile device through an *industry standard* port" (all emphasis in original)). The court further explained that "[t]he written description also provide[d] at least some indication that the patentee

was referring to the 'current' USB specification in existence at the time of the claimed invention," quoting excerpts from the specification that included "many mobile devices *presently* use USB (Universal Serial Bus) interfaces for communicating," "in order to be compliant with the *current USB specification*," and "[t]ypically when a mobile device 10 receives power over the USB from a USB host, it is required to draw power *in accordance with the USB specification*." *Id.* (all emphasis in original). These facts are very different from those here. Google notably identifies nothing in the specification stating that "SIM" was being used in the asserted patents to refer to a particular industry standard, much less a reference to a "current" standard as in *Fundamental Innovation*.

Google next refers to *PC Connector* (Dkt. 77 at 3-4), but that case addressed whether claim meaning is fixed at the time of filing, not whether courts may import extrinsic technical specifications into otherwise ordinary claim language. *PC Connector*, 406 F.3d at 1363 (construing the time-dependent terms "normally connectible," "conventional," "traditionally connectable," and "standard" input/output ports and whether they have "meanings specific to the time of filing" as opposed to non-time-related terms such as "dedicated"). The term "SIM" is not an inherently time-dependent term like those in *PC Connector*, so this case does not support Google's attempt to narrow the claim language here.

Google next relies upon *Chrimar* (Dkt. 77 at 4), but this case is likewise distinguishable. *Chrimar Sys, Inc. v. Alcatel-Lucent USA, Inc.*, No. 6:15-cv-163-JDL, 2016 WL 1228767, at *8-9 (E.D. Tex. Mar. 28, 2016). In *Chrimar*, the court addressed a coined standard-related claim term ("BaseT") and a specification that repeatedly invoked the relevant BaseT standards. *Id.* Here, by contrast, Google points to no patent language stating that SIM means "as described in ETSI/3GPP standards," no repeated reference to TS 31.101 or TS 31.102, and no prosecution statement

adopting that narrowing. This case does not support Google's rewrite of the "SIM" term.

Finally, Google makes a passing reference to *Extreme Networks* (Dkt. 77 at 4), but that case involved the claim term "IEEE 802 compliant device," and the parties *agreed* the term referred to an industry standard. *Extreme Networks, Inc. v. Enterasys Networks, Inc.*, No. 07-C-229-C, 2007 WL 5601497, at *16-17 (W.D. Wis. Nov. 21, 2007). And because the term included the word "compliant," the court noted that "[a]n invention cannot comply with standards not yet in existence." *Id.* at *17. There is no analogous language here and the *Extreme Networks* parties agreed the term referred to a standard, making the case readily distinguishable from the facts here.

3. Google's Extrinsic Evidence Cannot Supply a Standards-Compliance Limitation Missing from the Intrinsic Record

Google's SIM argument relies primarily on extrinsic sources: Dr. Jakobsson's declaration, textbooks, and 3GPP/ETSI materials the patents never cite. Dr. Jakobsson is a security expert, not an ETSI/3GPP standards drafter or participant, and his discussion of those materials is therefore offered only as background, not as evidence that the patentees incorporated those standards into the claims. Ex. A, Jakobsson Dep. Tr. at 18:13-20:10. This is important because while extrinsic evidence may illuminate how a POSITA understood a term, it cannot add a standards-compliance requirement the intrinsic record does not support. As the Federal Circuit warned, extrinsic evidence created for litigation suffers bias and is inherently less reliable than intrinsic evidence. *Phillips*, 415 F.3d at 1317.

Dr. Jakobsson likewise does not identify any patent passage defining SIM by reference to a particular ETSI or 3GPP document. Ex. A, Jakobsson Dep. Tr. At 32:8-33:20. And in any event, Google's own extrinsic sources do not compel Google's narrow reading. They repeatedly describe SIM by its identity and authentication function and acknowledge that, in ordinary usage, people often do not sharply distinguish between the card and application. *See, e.g.*, Google Ex. 10 (Dkt.

77-11) at 35 (In a 2002 reference entitled "GSM and UMTS," it states that: "When talking of the SIM, people usually do not distinguish between the hardware, the 'SIM card,' and the application itself. The SIM is just everything, the card and the application."); Google Ex. 8 (Dkt. 77-9) at 34 (In a 2002 reference entitled "Mobile Application Development," it states that: "Throughout its evolution the SIM has never lost sight of its primary function-to authenticate the subscriber to the network. At its heart, it is an identity token … Its unique ability to perform this authentication function is what has attracted applications to the SIM platform."). This cuts against Google's effort to turn "SIM" into a rigid, removability-focused standards term. It certainly does not justify replacing the claim language with Google's construction, especially when Dr. Jakobsson himself acknowledges that extrinsic evidence cannot override the intrinsic record. Jakobsson Decl. (Dkt. 77-10) at ¶ 38.

Ultimately, neither the extrinsic evidence nor the case law offered by Google supports its narrow reading of the claims, much less overcome the clear intrinsic record demonstrating that the challenged claims are not so limited. Google's proposed construction should be rejected.

B. Preamble of Claim 10 of the '155 Patent

Headwater's Proposed Construction	Google's Proposed Construction
Limiting except for "configured to be inaccessible to a user application software"	Limits the claim

The preamble of claim 10 of the '155 patent recites: "A method for use by a communications device including a wide area network port configured to connect the communications device to a wide area network, and further including a secure memory, a secure execution environment configured to be inaccessible to a user application software, and a secure data path processing agent, the method comprising." Dkt. 77-8 at claim 10. The parties agree that the claim requires a "secure execution environment" in the preamble. The sole dispute is whether

the additional descriptive clause following "a secure execution environment"—"configured to be inaccessible to a user application software"—also limits the claim. It does not. The body of claim 10 is structurally complete without that extra clause, and none of the recited method steps turns on that characteristic.

1. The Additional Descriptive Clause in the Preamble Is Not Limiting Because Claim 10's Body Is Structurally Complete and Never Uses That Characteristic

"Generally, the preamble does not limit the claims." *Allen Eng'g Corp. v. Bartell Indus., Inc.*, 299 F.3d 1336, 1346 (Fed. Cir. 2002) (citation omitted). Unless the preamble gives "life, meaning, and vitality" to a claim, it should not be construed as an affirmative limitation. *See Pitney Bowes, Inc. v. Hewlett-Packard Co.*, 182 F.3d 1298, 1305 (Fed. Cir. 1999). Under *Catalina*, preamble language is not limiting where, as here, "the claim body describes a structurally complete invention" and the additional preamble language merely states a "purpose or intended use." *Catalina Mktg.*, 289 F.3d at 809.

Claim 10's body confirms that the disputed clause is unnecessary to define the invention. The body recites a series of concrete method steps: executing the secure data path processing agent in the secure execution environment; generating a unique identifier; storing that identifier in secure memory; generating a data record; associating the identifier with the data record; and sending the identifier over a trusted communication link. None of these method steps depend on, refer back to, or are defined by the phrase "configured to be inaccessible to a user application software." The first step in the body refers back to "secure execution environment," so Headwater agrees that the claim requires a secure execution environment. But the additional descriptive characteristic of "inaccessibility" of the secure execution environment is not invoked by any step in the body. Thus, it is not necessary to give the claim life, meaning, or vitality.

Google's reliance on *Bio-Rad* does not change the analysis. *Bio-Rad* does not hold that

once one phrase in a preamble supplies antecedent basis, every descriptive modifier attached to it automatically becomes limiting. *Bio-Rad Labs., Inc. v. 10X Genomics Inc.*, 967 F.3d 1353, 1371 (Fed. Cir. 2020). To the contrary, the Federal Circuit has repeatedly recognized that one portion of a preamble may be limiting while additional descriptive language is not. *See Marrin v. Griffin*, 599 F.3d 1290, 1294-95 (Fed. Cir. 2010) (treating "scratch-off labels" as limiting while "for permitting a user to write thereon without the use of a marking implement" as non-limiting); *TomTom, Inc. v. Adolph*, 790 F.3d 1315, 1323 (Fed. Cir. 2015) (finding that the district court "erred in determining that it had to construe the entire preamble if it construed a portion of it"). That is exactly the proper result here: "secure execution environment" is limiting because the body refers back to it, but the additional phrase "configured to be inaccessible to a user application software" is not limiting, because the body never uses that characteristic.

The Court should therefore hold that claim 10 requires a secure execution environment, but the Court should not find limiting the separate descriptive phrase "configured to be inaccessible to a user application software."

2. Google's "Structural Limitation" Theory Improperly Imports One Embodiment and Ignores the Patentee's Claim Drafting Choices

Google's argument that the disputed phrase is "structural" depends on reading one embodiment into the claim. But the specification discusses secure execution environment in numerous places without making "inaccessible to a user application software" the universal defining feature of every secure execution environment. *See, e.g.*, Dkt. 77-8 ('155 patent) at 3:4-26; 3:53-4:16. Google's cited passages come from embodiment-specific discussions introduced with language such as "in some embodiments." *See, e.g.*, *id.* at 22:56-58, 56:40-43. That is not enough to transform an additional descriptive clause in the preamble into a mandatory claim limitation. At most, those passages describe one security model. They do not show that every

"secure execution environment" in claim 10 must be limited by the exact accessibility characteristics Google selects from those embodiments. While Google points to an embodiment depicted in Figure 16 as indicating there can be no communication between application programs and the secure execution environment (*see* Dkt. 77 at 9), the specification is not so limited. For example, Figure 3 (reproduced below) shows that the specification also contemplates communication paths involving application programs and the secure execution environment:

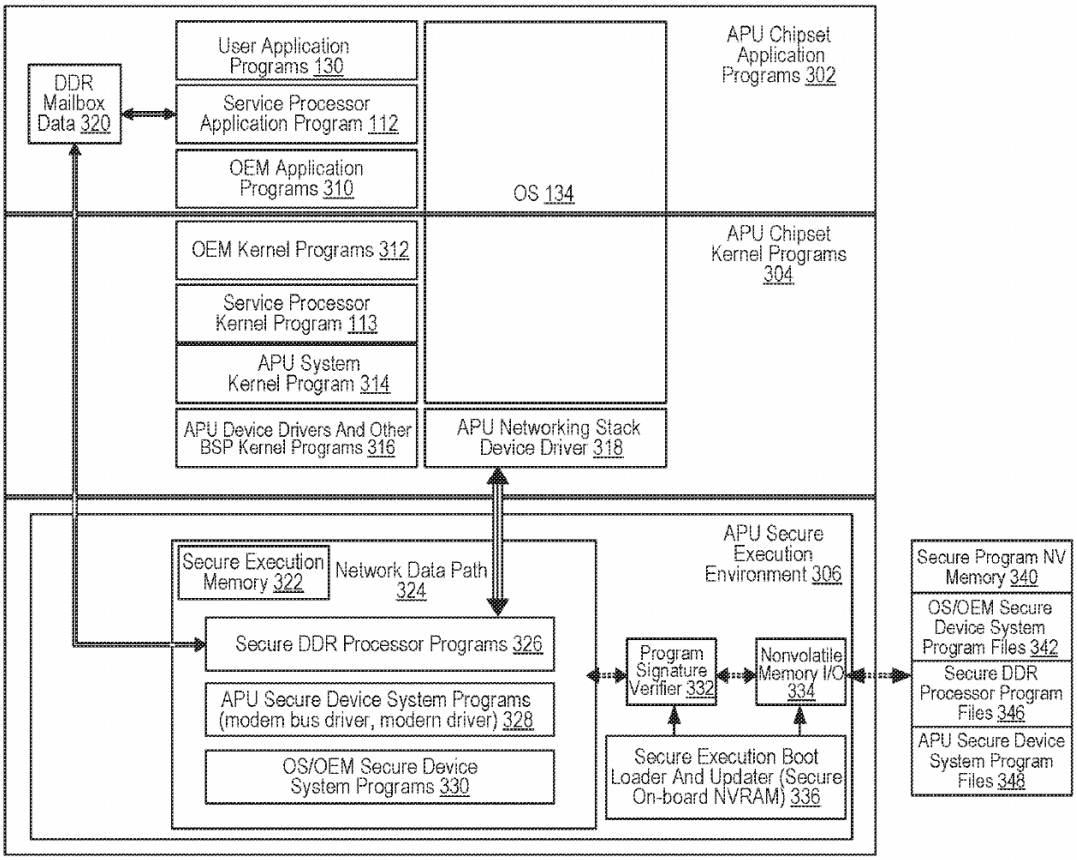

Id. at Fig. 3. The Figure 16 embodiment referenced by Google is not the only architectural model described.

Furthermore, Google's reliance on claim 1 proves the opposite of what Google argues. Claim 1 places the phrase "configured to be inaccessible to a user application software" in the body of the claim itself. That shows the patentee knew how to make that phrase an express claim

limitation when it intended to do so. In claim 10, however, the patentee did not place the phrase in the body. Instead, it appears only as additional contextual description in the preamble of claim 10. Where, as here, the method of claim 10 is a structurally complete invention without the "configured to be inaccessible to a user application software" description stated in the preamble, that language should not be read into the claim as a limitation. *Marrin*, 599 F.3d at 1294-95.

III. CONCLUSION

For these reasons, the Court should reject Google's efforts to import limitations from extrinsic standards materials and embodiment-specific disclosures. Instead, the Court should adopt Headwater's constructions for the disputed terms.

Dated: June 8, 2026

Respectfully submitted,

/s/ Kris Davis

Marc Fenster
CA State Bar No. 181067
Email: mfenster@raklaw.com
Reza Mirzaie
CA State Bar No. 246953
Email: rmirzaie@raklaw.com
Brian Ledahl
CA State Bar No. 186579
Email: bledahl@raklaw.com
Dale Chang
CA State Bar No. 248657
Email: dchang@raklaw.com
Kristopher Davis
CA State Bar No. 329627
Email: kdavis@raklaw.com
James S. Tsuei
CA State Bar No. 285530
Email: jtsuei@raklaw.com
James N. Pickens
CA State Bar No. 307474
Email: jpickens@raklaw.com
Jason M. Wietholter
CA State Bar No. 337139

Email: jwietholter@raklaw.com
RUSS AUGUST & KABAT
12424 Wilshire Blvd. 12th Floor
Los Angeles, CA 90025
Telephone: 310-826-7474

Qi (Peter) Tong
TX State Bar No. 24119042
Email: ptong@raklaw.com
RUSS AUGUST & KABAT
8080 N. Central Expy., Suite 1503
Dallas, TX 75206
Telephone: 310-826-7474

ATTORNEYS FOR PLAINTIFF,
Headwater Research LLC

CERTIFICATE OF SERVICE

I hereby certify that counsel of record who are deemed to have consented to electronic service are being served on June 8, 2026, with a copy of this document via the Court's CM/ECF.

/s/ Kris Davis
Kris Davis