US010771980B2

(12) **United States Patent**
Raleigh et al.

(10) **Patent No.: US 10,771,980 B2**
(45) **Date of Patent: Sep. 8, 2020**

(54) **COMMUNICATIONS DEVICE WITH SECURE DATA PATH PROCESSING AGENTS**

(71) Applicant: **Headwater Research LLC**, Tyler, TX (US)

(72) Inventors: **Gregory G. Raleigh**, Woodside, CA (US); **James Lavine**, Corte Madera, CA (US); **Alireza Raissinia**, Monte Sereno, CA (US); **Michael J. Sabin**, Sunnyvale, CA (US)

(73) Assignee: **Headwater Research LLC**, Tyler, TX (US)

(*) Notice: Subject to any disclaimer, the term of this patent is extended or adjusted under 35 U.S.C. 154(b) by 0 days.

(21) Appl. No.: **15/977,731**

(22) Filed: **May 11, 2018**

(65) **Prior Publication Data**

US 2019/0132739 A1 May 2, 2019

Related U.S. Application Data

(60) Continuation of application No. 15/158,522, filed on May 18, 2016, now Pat. No. 9,980,146, which is a

(Continued)

(51) **Int. Cl.**
H04W 12/12 (2009.01)
H04L 29/06 (2006.01)

(Continued)

(52) **U.S. Cl.**
CPC ***H04W 12/12*** (2013.01); ***H04L 41/046*** (2013.01); ***H04L 63/1425*** (2013.01); *G06F 21/575* (2013.01)

(58) **Field of Classification Search**
CPC .. H04W 12/12; H04L 63/1425; H04L 41/046; G06F 21/575

(Continued)

(56) **References Cited**

U.S. PATENT DOCUMENTS

5,131,020 A 7/1992 Liebesny et al.
5,283,904 A 2/1994 Carson et al.

(Continued)

FOREIGN PATENT DOCUMENTS

CA 2688553 A1 12/2008
CN 1310401 A 8/2001

(Continued)

OTHER PUBLICATIONS

"Ads and movies on the run," the Gold Coast Bulletin, Southport, Qld, Jan. 29, 2008.

(Continued)

Primary Examiner — Andrew Joseph Rudy
(74) *Attorney, Agent, or Firm* — James E. Harris

(57) **ABSTRACT**

Secure device data records (DDRs) are provided. In some embodiments, a system for secure DDRs includes a processor of a wireless communication device for wireless communication with a wireless network, in which the processor is configured with a secure execution environment, and in which the secure execution environment is configured to: monitor service usage of the wireless communication device with the wireless network; and generate a plurality of device data records of the monitored service usage of the wireless communication device with the wireless network, in which each device data record is associated with a unique sequence order identifier; and a memory coupled to the processor and configured to provide the processor with instructions. In some embodiments, the secure execution environment is located in an application processor, in a modem processor, and/or in a subscriber identity module (SIM).

10 Claims, 16 Drawing Sheets

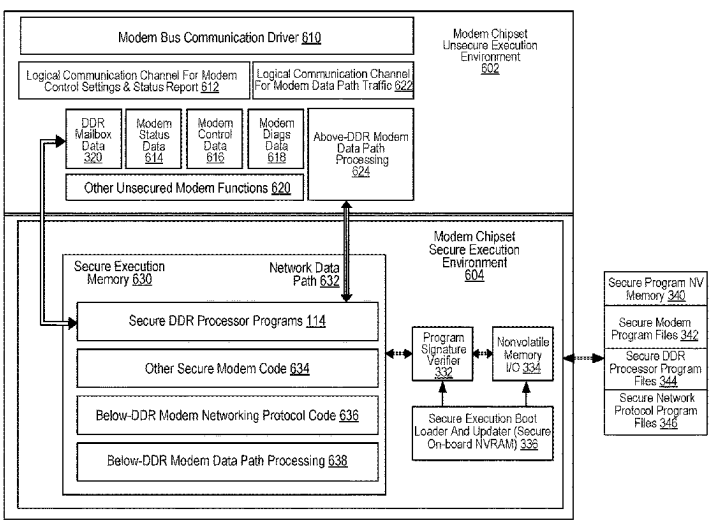

GOOGLE EXHIBIT 1022
Google v. Headwater
IPR2026-00442

Related U.S. Application Data

continuation of application No. 14/272,274, filed on May 7, 2014, now abandoned, which is a division of application No. 13/247,998, filed on Sep. 28, 2011, now Pat. No. 8,725,123, which is a continuation-in-part of application No. 13/134,028, filed on May 25, 2011, now Pat. No. 8,589,541, which is a continuation-in-part of application No. 12/695,019, filed on Jan. 27, 2010, now Pat. No. 8,275,830, and a continuation-in-part of application No. 12/695,020, filed on Jan. 27, 2010, now Pat. No. 8,406,748, and a continuation-in-part of application No. 12/694,455, filed on Jan. 27, 2010, now Pat. No. 8,402,111, and a continuation-in-part of application No. 13/134,005, filed on May 25, 2011, now Pat. No. 8,635,335, and a continuation-in-part of application No. 12/695,021, filed on Jan. 27, 2010, now Pat. No. 8,346,225, and a continuation-in-part of application No. 12/380,780, filed on Mar. 2, 2009, now Pat. No. 8,839,388.

(60) Provisional application No. 61/389,547, filed on Oct. 4, 2010, provisional application No. 61/387,243, filed on Sep. 28, 2010, provisional application No. 61/387,247, filed on Sep. 28, 2010, provisional application No. 61/407,358, filed on Oct. 27, 2010, provisional application No. 61/418,507, filed on Dec. 1, 2010, provisional application No. 61/418,509, filed on Dec. 1, 2010, provisional application No. 61/420,727, filed on Dec. 7, 2010, provisional application No. 61/422,565, filed on Dec. 13, 2010, provisional application No. 61/422,572, filed on Dec. 13, 2010, provisional application No. 61/422,574, filed on Dec. 13, 2010, provisional application No. 61/435,564, filed on Jan. 24, 2011, provisional application No. 61/472,606, filed on Apr. 6, 2011, provisional application No. 61/348,022, filed on May 25, 2010, provisional application No. 61/381,159, filed on Sep. 9, 2010, provisional application No. 61/381,162, filed on Sep. 9, 2010, provisional application No. 61/384,456, filed on Sep. 20, 2010, provisional application No. 61/385,020, filed on Sep. 21, 2010, provisional application No. 61/264,126, filed on Nov. 24, 2009, provisional application No. 61/270,353, filed on Jul. 6, 2009, provisional application No. 61/275,208, filed on Aug. 25, 2009, provisional application No. 61/237,753, filed on Aug. 28, 2009, provisional application No. 61/264,120, filed on Nov. 24, 2009, provisional application No. 61/252,151, filed on Oct. 15, 2009, provisional application No. 61/252,153, filed on Oct. 15, 2009, provisional application No. 61/206,354, filed on Jan. 28, 2009, provisional application No. 61/206,944, filed on Feb. 4, 2009, provisional application No. 61/207,393, filed on Feb. 10, 2009, provisional application No. 61/207,739, filed on Feb. 13, 2009.

(51) **Int. Cl.**
H04L 12/24 (2006.01)
G06F 21/57 (2013.01)

(58) **Field of Classification Search**
USPC 705/28–32; 340/5.1; 709/217–223; 455/405, 406, 414.1, 432.1, 456.1
See application file for complete search history.

(56) **References Cited**

U.S. PATENT DOCUMENTS

5,325,532	A	6/1994	Crosswy et al.
5,572,528	A	11/1996	Shuen
5,577,100	A	11/1996	McGregor et al.
5,594,777	A	1/1997	Makkonen et al.
5,617,539	A	4/1997	Ludwig et al.
5,630,159	A	5/1997	Zancho
5,633,484	A	5/1997	Zancho et al.
5,633,868	A	5/1997	Baldwin et al.
5,751,719	A	5/1998	Chen et al.
5,754,953	A	5/1998	Briancon et al.
5,774,532	A	6/1998	Gottlieb et al.
5,794,142	A	8/1998	Vanttila et al.
5,814,798	A	9/1998	Zancho
5,889,477	A	3/1999	Fastenrath
5,892,900	A	4/1999	Ginter et al.
5,903,845	A	5/1999	Buhrmann et al.
5,915,008	A	6/1999	Dulman
5,915,226	A	6/1999	Martineau
5,933,778	A	8/1999	Buhrmann et al.
5,940,472	A	8/1999	Newman et al.
5,974,439	A	10/1999	Bollella
5,983,270	A	11/1999	Abraham et al.
6,035,281	A	3/2000	Crosskey et al.
6,038,452	A	3/2000	Strawczynski et al.
6,038,540	A	3/2000	Krist et al.
6,047,268	A	4/2000	Bartoli et al.
6,058,434	A	5/2000	Wilt et al.
6,061,571	A	5/2000	Tamura
6,064,878	A	5/2000	Denker et al.
6,078,953	A	6/2000	Vaid et al.
6,081,591	A	6/2000	Skoog
6,098,878	A	8/2000	Dent et al.
6,104,700	A	8/2000	Haddock et al.
6,115,823	A	9/2000	Velasco et al.
6,119,933	A	9/2000	Wong et al.
6,125,391	A	9/2000	Meltzer et al.
6,141,565	A	10/2000	Feuerstein et al.
6,141,686	A	10/2000	Jackowski et al.
6,148,336	A	11/2000	Thomas et al.
6,154,738	A	11/2000	Call
6,157,636	A	12/2000	Voit et al.
6,185,576	B1	2/2001	Mcintosh
6,198,915	B1	3/2001	McGregor et al.
6,219,786	B1	4/2001	Cunningham et al.
6,226,277	B1	5/2001	Chuah
6,246,870	B1	6/2001	Dent et al.
6,263,055	B1	7/2001	Garland et al.
6,292,828	B1	9/2001	Williams
6,317,584	B1	11/2001	Abu-Amara et al.
6,370,139	B2	4/2002	Redmond
6,381,316	B2	4/2002	Joyce et al.
6,393,014	B1	5/2002	Daly et al.
6,397,259	B1	5/2002	Lincke et al.
6,401,113	B2	6/2002	Lazaridis et al.
6,418,147	B1	7/2002	Wiedeman
6,438,575	B1	8/2002	Khan et al.
6,445,777	B1	9/2002	Clark
6,449,479	B1	9/2002	Sanchez
6,466,984	B1	10/2002	Naveh et al.
6,477,670	B1	11/2002	Ahmadvand
6,502,131	B1	12/2002	Vaid et al.
6,505,114	B2	1/2003	Luciani
6,510,152	B1	1/2003	Gerszberg et al.
6,522,629	B1	2/2003	Anderson, Sr.
6,526,066	B1	2/2003	Weaver
6,532,235	B1	3/2003	Benson et al.
6,532,579	B2	3/2003	Sato et al.
6,535,855	B1	3/2003	Cahill et al.
6,535,949	B1	3/2003	Parker
6,539,082	B1	3/2003	Lowe et al.
6,542,465	B1	4/2003	Wang
6,542,500	B1	4/2003	Gerszberg et al.
6,542,992	B1	4/2003	Peirce et al.
6,546,016	B1	4/2003	Gerszberg et al.
6,563,806	B1	5/2003	Yano et al.

(56) **References Cited**

U.S. PATENT DOCUMENTS

6,570,974 B1 5/2003 Gerszberg et al.
6,574,321 B1 6/2003 Cox et al.
6,574,465 B2 6/2003 Marsh et al.
6,578,076 B1 6/2003 Putzolu
6,581,092 B1 6/2003 Motoyama
6,591,098 B1 7/2003 Shieh et al.
6,598,034 B1 7/2003 Kloth
6,601,040 B1 7/2003 Kolls
6,603,969 B1 8/2003 Vuoristo et al.
6,603,975 B1 8/2003 Inouchi et al.
6,606,744 B1 8/2003 Mikurak
6,628,934 B2 9/2003 Rosenberg et al.
6,631,122 B1 10/2003 Arunachalam et al.
6,636,721 B2 10/2003 Threadgill et al.
6,639,975 B1 10/2003 O'Neal et al.
6,640,097 B2 10/2003 Corrigan et al.
6,640,334 B1 10/2003 Rasmussen
6,650,887 B2 11/2003 McGregor et al.
6,651,101 B1 11/2003 Gai et al.
6,654,786 B1 11/2003 Fox et al.
6,654,814 B1 11/2003 Britton et al.
6,658,254 B1 12/2003 Purdy et al.
6,662,014 B1 12/2003 Walsh
6,678,516 B2 1/2004 Nordman et al.
6,683,853 B1 1/2004 Kannas et al.
6,684,244 B1 1/2004 Goldman et al.
6,690,918 B2 2/2004 Evans et al.
6,697,821 B2 2/2004 Ziff et al.
6,725,031 B2 4/2004 Watler et al.
6,725,256 B1 4/2004 Albal et al.
6,732,176 B1 5/2004 Stewart et al.
6,735,206 B1 5/2004 Oki et al.
6,748,195 B1 6/2004 Phillips
6,748,437 B1 6/2004 Mankude et al.
6,751,296 B1 6/2004 Albal et al.
6,754,470 B2 6/2004 Hendrickson et al.
6,757,717 B1 6/2004 Goldstein
6,760,417 B1 7/2004 Wallenius
6,763,000 B1 7/2004 Walsh
6,763,226 B1 7/2004 McZeal, Jr.
6,765,864 B1 7/2004 Natarajan et al.
6,765,925 B1 7/2004 Sawyer et al.
6,782,412 B2 8/2004 Brophy et al.
6,785,889 B1 8/2004 Williams
6,792,461 B1 9/2004 Hericourt
6,823,273 B2 * 11/2004 Ouellette G06F 21/71 324/110
6,829,596 B1 12/2004 Frazee
6,829,696 B1 12/2004 Balmer et al.
6,839,340 B1 1/2005 Voit et al.
6,842,628 B1 1/2005 Arnold et al.
6,873,988 B2 3/2005 Herrmann et al.
6,876,653 B2 4/2005 Ambe et al.
6,879,825 B1 4/2005 Daly
6,882,718 B1 4/2005 Smith
6,885,997 B1 4/2005 Roberts
6,901,440 B1 5/2005 Bimm et al.
6,920,455 B1 7/2005 Weschler
6,922,562 B2 7/2005 Ward et al.
6,928,280 B1 8/2005 Xanthos et al.
6,934,249 B1 8/2005 Bertin et al.
6,934,751 B2 8/2005 Jayapalan et al.
6,947,723 B1 9/2005 Gurnani et al.
6,947,985 B2 9/2005 Hegli et al.
6,952,428 B1 10/2005 Necka et al.
6,957,067 B1 10/2005 Iyer et al.
6,959,202 B2 10/2005 Heinonen et al.
6,959,393 B2 10/2005 Hollis et al.
6,965,667 B2 11/2005 Trabandt et al.
6,965,872 B1 11/2005 Grdina
6,967,958 B2 11/2005 Ono et al.
6,970,692 B2 11/2005 Tysor
6,970,927 B1 11/2005 Stewart et al.
6,982,733 B1 1/2006 McNally et al.
6,983,370 B2 1/2006 Eaton et al.
6,996,062 B1 2/2006 Freed et al.
6,996,076 B1 2/2006 Forbes et al.
6,996,393 B2 2/2006 Pyhalammi et al.
6,998,985 B2 2/2006 Reisman et al.
7,000,001 B2 2/2006 Lazaridis
7,002,920 B1 2/2006 Ayyagari et al.
7,007,295 B1 2/2006 Rose et al.
7,013,469 B2 3/2006 Smith et al.
7,017,189 B1 3/2006 DeMello et al.
7,020,781 B1 3/2006 Saw et al.
7,024,200 B2 4/2006 McKenna et al.
7,024,460 B2 4/2006 Koopmas et al.
7,027,055 B2 4/2006 Anderson et al.
7,027,408 B2 4/2006 Nabkel et al.
7,031,733 B2 4/2006 Alminana et al.
7,032,072 B1 4/2006 Quinn et al.
7,039,027 B2 5/2006 Bridgelall
7,039,037 B2 5/2006 Wang et al.
7,039,403 B2 5/2006 Wong
7,039,713 B1 5/2006 Van Gunter et al.
7,042,988 B2 5/2006 Juitt et al.
7,043,225 B1 5/2006 Patel et al.
7,043,226 B2 5/2006 Yamauchi
7,043,268 B2 5/2006 Yukie et al.
7,047,276 B2 5/2006 Liu et al.
7,058,022 B1 6/2006 Carolan et al.
7,058,968 B2 6/2006 Rowland et al.
7,068,600 B2 6/2006 Cain
7,069,248 B2 6/2006 Huber
7,082,422 B1 7/2006 Zirngibl et al.
7,084,775 B1 8/2006 Smith
7,092,696 B1 8/2006 Hosain et al.
7,095,754 B2 8/2006 Benveniste
7,102,620 B2 9/2006 Harries et al.
7,110,753 B2 9/2006 Campen
7,113,780 B2 9/2006 Mckenna et al.
7,113,997 B2 9/2006 Jayapalan et al.
7,120,133 B1 10/2006 Joo et al.
7,131,578 B2 11/2006 Paschini et al.
7,133,386 B2 11/2006 Holur et al.
7,133,695 B2 11/2006 Beyda
7,136,361 B2 11/2006 Benveniste
7,139,569 B2 11/2006 Kato
7,142,876 B2 11/2006 Trossen et al.
7,149,229 B1 12/2006 Leung
7,149,521 B2 12/2006 Sundar et al.
7,151,764 B1 12/2006 Heinonen et al.
7,158,792 B1 1/2007 Cook et al.
7,162,237 B1 1/2007 Silver et al.
7,165,040 B2 1/2007 Ehrman et al.
7,167,078 B2 1/2007 Pourchot
7,174,156 B1 2/2007 Mangal
7,174,174 B2 2/2007 Boris et al.
7,177,919 B1 2/2007 Truong et al.
7,180,855 B1 2/2007 Lin
7,181,017 B1 2/2007 Nagel et al.
7,191,248 B2 3/2007 Chattopadhyay et al.
7,197,321 B2 3/2007 Erskine et al.
7,200,112 B2 4/2007 Sundar et al.
7,200,551 B1 4/2007 Senez
7,203,169 B1 4/2007 Okholm et al.
7,203,721 B1 4/2007 Ben-Efraim et al.
7,203,752 B2 4/2007 Rice et al.
7,209,664 B1 4/2007 McNicol et al.
7,212,491 B2 5/2007 Koga
7,219,123 B1 5/2007 Fiechter et al.
7,222,190 B2 5/2007 Klinker et al.
7,222,304 B2 5/2007 Beaton et al.
7,224,968 B2 5/2007 Dobson et al.
7,228,354 B2 6/2007 Chambliss et al.
7,236,780 B2 6/2007 Benco
7,242,668 B2 7/2007 Kan et al.
7,242,920 B2 7/2007 Morris
7,245,901 B2 7/2007 McGregor et al.
7,248,570 B2 7/2007 Bahl et al.
7,251,218 B2 7/2007 Jorgensen
7,260,382 B1 8/2007 Lamb et al.
7,266,371 B1 9/2007 Amin et al.
7,269,157 B2 9/2007 Klinker et al.

(56) **References Cited**

U.S. PATENT DOCUMENTS

7,271,765	B2	9/2007	Stilp et al.
7,272,660	B1	9/2007	Powers et al.
7,280,816	B2	10/2007	Fratti et al.
7,280,818	B2	10/2007	Clayton
7,283,561	B1	10/2007	Picher-Dempsey
7,283,963	B1	10/2007	Fitzpatrick et al.
7,286,834	B2	10/2007	Walter
7,286,848	B2	10/2007	Vireday et al.
7,289,489	B1	10/2007	Kung et al.
7,290,283	B2	10/2007	Copeland, III
7,310,424	B2	12/2007	Gehring et al.
7,313,237	B2	12/2007	Bahl et al.
7,315,892	B2	1/2008	Freimuth et al.
7,317,699	B2	1/2008	Godfrey et al.
7,318,111	B2	1/2008	Zhao
7,320,029	B2	1/2008	Rinne et al.
7,320,781	B2	1/2008	Lambert et al.
7,322,044	B2	1/2008	Hrastar
7,324,447	B1	1/2008	Morford
7,325,037	B2	1/2008	Lawson
7,336,960	B2	2/2008	Zavalkovsky et al.
7,340,772	B2	3/2008	Panasyuk et al.
7,346,410	B2	3/2008	Uchiyama
7,349,695	B2	3/2008	Oommen et al.
7,353,533	B2	4/2008	Wright et al.
7,356,011	B1	4/2008	Waters et al.
7,356,337	B2	4/2008	Florence
7,366,497	B2	4/2008	Nagata
7,366,654	B2	4/2008	Moore
7,366,934	B1	4/2008	Narayan et al.
7,369,848	B2	5/2008	Jiang
7,369,856	B2	5/2008	Ovadia
7,373,136	B2	5/2008	Watler et al.
7,373,179	B2	5/2008	Stine et al.
7,379,731	B2	5/2008	Natsuno et al.
7,388,950	B2	6/2008	Elsey et al.
7,389,412	B2	6/2008	Sharma et al.
7,391,724	B2	6/2008	Alakoski et al.
7,395,056	B2	7/2008	Petermann
7,395,244	B1	7/2008	Kingsford
7,401,338	B1	7/2008	Bowen et al.
7,403,763	B2	7/2008	Maes
7,409,447	B1	8/2008	Assadzadeh
7,409,569	B2	8/2008	Illowsky et al.
7,411,930	B2	8/2008	Montojo et al.
7,418,253	B2	8/2008	Kavanah
7,418,257	B2	8/2008	Kim
7,421,004	B2	9/2008	Feher
7,423,971	B1	9/2008	Mohaban et al.
7,428,750	B1	9/2008	Dunn et al.
7,433,362	B2	10/2008	Mallya et al.
7,436,816	B2	10/2008	Mehta et al.
7,440,433	B2	10/2008	Rink et al.
7,444,669	B1	10/2008	Bahl et al.
7,450,591	B2	11/2008	Korling et al.
7,450,927	B1	11/2008	Creswell et al.
7,454,191	B2	11/2008	Dawson et al.
7,457,265	B2	11/2008	Julka et al.
7,457,870	B1	11/2008	Lownsbrough et al.
7,460,837	B2	12/2008	Diener
7,466,652	B2	12/2008	Lau et al.
7,467,160	B2	12/2008	McIntyre
7,472,189	B2	12/2008	Mallya et al.
7,478,420	B2	1/2009	Wright et al.
7,486,185	B2	2/2009	Culpepper et al.
7,486,658	B2	2/2009	Kumar
7,489,918	B2	2/2009	Zhou et al.
7,493,659	B1	2/2009	Wu et al.
7,496,652	B2	2/2009	Pezzutti
7,499,438	B2	3/2009	Hinman et al.
7,499,537	B2	3/2009	Elsey et al.
7,502,672	B1	3/2009	Kolls
7,505,756	B2	3/2009	Bahl
7,505,795	B1	3/2009	Lim et al.
7,508,794	B2	3/2009	Feather et al.
7,508,799	B2	3/2009	Sumner et al.
7,512,128	B2	3/2009	DiMambro et al.
7,512,131	B2	3/2009	Svensson et al.
7,515,608	B2	4/2009	Yuan et al.
7,515,926	B2	4/2009	Bu et al.
7,516,219	B2	4/2009	Moghaddam et al.
7,522,549	B2	4/2009	Karaoguz et al.
7,522,576	B2	4/2009	Du et al.
7,526,541	B2	4/2009	Roese et al.
7,529,204	B2	5/2009	Bourlas et al.
7,533,158	B2	5/2009	Grannan et al.
7,535,880	B1	5/2009	Hinman et al.
7,536,695	B2	5/2009	Alam et al.
7,539,132	B2	5/2009	Werner et al.
7,539,862	B2	5/2009	Edgett et al.
7,540,408	B2	6/2009	Levine et al.
7,545,782	B2	6/2009	Rayment et al.
7,546,460	B2	6/2009	Maes
7,546,629	B2	6/2009	Albert et al.
7,548,875	B2	6/2009	Mikkelsen et al.
7,548,976	B2	6/2009	Bahl et al.
7,551,921	B2	6/2009	Petermann
7,551,922	B2	6/2009	Roskowski et al.
7,554,983	B1	6/2009	Muppala
7,555,757	B2	6/2009	Smith et al.
7,561,899	B2	7/2009	Lee
7,562,213	B1	7/2009	Timms
7,564,799	B2	7/2009	Holland et al.
7,565,141	B2	7/2009	Macaluso
7,565,328	B1	7/2009	Donner
7,574,509	B2	8/2009	Nixon et al.
7,574,731	B2	8/2009	Fascenda
7,577,431	B2	8/2009	Jiang
7,580,356	B1	8/2009	Mishra et al.
7,580,857	B2	8/2009	VanFleet et al.
7,583,964	B2	9/2009	Wong
7,584,298	B2	9/2009	Klinker et al.
7,586,871	B2	9/2009	Hamilton et al.
7,593,417	B2	9/2009	Wang et al.
7,593,730	B2	9/2009	Khandelwal et al.
7,596,373	B2	9/2009	Mcgregor et al.
7,599,288	B2	10/2009	Cole et al.
7,599,714	B2	10/2009	Kuzminskiy
7,602,746	B2	10/2009	Calhoun et al.
7,603,710	B2	10/2009	Harvey et al.
7,606,357	B2	10/2009	Daigle
7,606,918	B2	10/2009	Holzman et al.
7,607,041	B2	10/2009	Kraemer et al.
7,609,650	B2	10/2009	Roskowski et al.
7,609,700	B1	10/2009	Ying et al.
7,610,047	B2	10/2009	Hicks, III et al.
7,610,057	B2	10/2009	Bahl et al.
7,610,328	B2	10/2009	Haase et al.
7,610,396	B2	10/2009	Taglienti et al.
7,612,712	B2	11/2009	LaMance et al.
7,613,444	B2	11/2009	Lindqvist et al.
7,614,051	B2	11/2009	Glaum et al.
7,616,962	B2	11/2009	Oswal et al.
7,617,516	B2	11/2009	Huslak et al.
7,620,041	B2	11/2009	Dunn et al.
7,620,065	B2	11/2009	Falardeau
7,620,162	B2	11/2009	Aaron et al.
7,620,383	B2	11/2009	Taglienti et al.
7,627,314	B2	12/2009	Carlson et al.
7,627,600	B2	12/2009	Citron et al.
7,627,767	B2	12/2009	Sherman et al.
7,627,872	B2	12/2009	Hebeler et al.
7,633,438	B2	12/2009	Tysowski
7,634,253	B2	12/2009	Plestid et al.
7,634,388	B2	12/2009	Archer et al.
7,636,574	B2	12/2009	Poosala
7,636,626	B2	12/2009	Oesterling et al.
7,643,411	B2	1/2010	Andreasen et al.
7,644,151	B2	1/2010	Jerrim et al.
7,644,267	B2	1/2010	Ylikoski et al.
7,644,414	B2	1/2010	Smith et al.
7,647,047	B2	1/2010	Moghaddam et al.
7,650,137	B2	1/2010	Jobs et al.
7,653,394	B2	1/2010	McMillin

(56) **References Cited**

U.S. PATENT DOCUMENTS

7,656,271	B2	2/2010	Ehrman et al.
7,657,920	B2	2/2010	Arseneau et al.
7,660,419	B1	2/2010	Ho
7,661,124	B2	2/2010	Ramanathan et al.
7,664,494	B2	2/2010	Jiang
7,668,176	B2	2/2010	Chuah
7,668,612	B1	2/2010	Okkonen
7,668,903	B2	2/2010	Edwards et al.
7,668,966	B2	2/2010	Klinker et al.
7,676,673	B2	3/2010	Weller et al.
7,680,086	B2	3/2010	Eglin
7,681,226	B2	3/2010	Kraemer et al.
7,684,370	B2	3/2010	Kezys
7,685,131	B2	3/2010	Batra et al.
7,685,254	B2	3/2010	Pandya
7,685,530	B2	3/2010	Sherrard et al.
7,688,792	B2	3/2010	Babbar et al.
7,693,107	B2	4/2010	De Froment
7,693,720	B2	4/2010	Kennewick et al.
7,697,540	B2	4/2010	Haddad et al.
7,707,320	B2	4/2010	Singhai et al.
7,710,932	B2	5/2010	Muthuswamy et al.
7,711,848	B2	5/2010	Maes
7,719,966	B2	5/2010	Luft et al.
7,720,206	B2	5/2010	Devolites et al.
7,720,464	B2	5/2010	Batta
7,720,505	B2	5/2010	Gopi et al.
7,720,960	B2	5/2010	Pruss et al.
7,721,296	B2	5/2010	Ricagni
7,724,716	B2	5/2010	Fadell
7,725,570	B1	5/2010	Lewis
7,729,326	B2	6/2010	Sekhar
7,730,123	B1	6/2010	Erickson et al.
7,734,784	B1	6/2010	Araujo et al.
7,742,406	B1	6/2010	Muppala
7,742,961	B2	6/2010	Aaron et al.
7,743,119	B2	6/2010	Friend et al.
7,746,854	B2	6/2010	Ambe et al.
7,747,240	B1	6/2010	Briscoe et al.
7,747,699	B2	6/2010	Prueitt et al.
7,747,730	B1	6/2010	Harlow
7,752,330	B2	7/2010	Olsen et al.
7,756,056	B2	7/2010	Kim et al.
7,756,509	B2	7/2010	Rajagopalan et al.
7,756,534	B2	7/2010	Anupam et al.
7,756,757	B1	7/2010	Oakes, III
7,760,137	B2	7/2010	Martucci et al.
7,760,711	B1	7/2010	Kung et al.
7,760,861	B1	7/2010	Croak et al.
7,765,294	B2	7/2010	Edwards et al.
7,769,397	B2	8/2010	Funato et al.
7,770,785	B2	8/2010	Jha et al.
7,774,323	B2	8/2010	Helfman
7,774,412	B1	8/2010	Schnepel
7,774,456	B1	8/2010	Lownsbrough et al.
7,778,176	B2	8/2010	Morford
7,778,643	B2	8/2010	Laroia et al.
7,788,700	B1	8/2010	Feezel et al.
7,792,257	B1	9/2010	Vanier et al.
7,792,538	B2	9/2010	Kozisek
7,792,708	B2	9/2010	Alva
7,797,019	B2	9/2010	Friedmann
7,797,060	B2	9/2010	Grgic et al.
7,797,204	B2	9/2010	Balent
7,797,401	B2	9/2010	Stewart et al.
7,801,523	B1	9/2010	Kenderov
7,801,783	B2	9/2010	Kende et al.
7,801,985	B1	9/2010	Pitkow et al.
7,802,724	B1	9/2010	Nohr
7,805,140	B2	9/2010	Friday et al.
7,805,522	B2	9/2010	Schlüter et al.
7,805,606	B2	9/2010	Birger et al.
7,809,351	B1	10/2010	Panda et al.
7,809,372	B2	10/2010	Rajaniemi
7,813,746	B2	10/2010	Rajkotia
7,817,615	B1	10/2010	Breau et al.
7,817,983	B2	10/2010	Cassett et al.
7,822,837	B1	10/2010	Urban et al.
7,822,849	B2	10/2010	Titus
7,826,427	B2	11/2010	Sood et al.
7,826,607	B1	11/2010	De Carvalho Resende et al.
7,835,275	B1	11/2010	Swan et al.
7,843,831	B2	11/2010	Morrill et al.
7,843,843	B1	11/2010	Papp, III et al.
7,844,034	B1	11/2010	Oh et al.
7,844,728	B2	11/2010	Anderson et al.
7,848,768	B2	12/2010	Omori et al.
7,849,161	B2	12/2010	Koch et al.
7,849,170	B1	12/2010	Hargens et al.
7,849,477	B2	12/2010	Cristofalo et al.
7,853,250	B2	12/2010	Harvey et al.
7,853,255	B2	12/2010	Karaoguz et al.
7,853,656	B2	12/2010	Yach et al.
7,856,226	B2	12/2010	Wong et al.
7,860,088	B2	12/2010	Lioy
7,865,182	B2	1/2011	Macaluso
7,865,187	B2	1/2011	Ramer et al.
7,868,778	B2	1/2011	Kenwright
7,868,814	B1	1/2011	Bergman
7,873,001	B2	1/2011	Silver
7,873,344	B2	1/2011	Bowser et al.
7,873,346	B2	1/2011	Petersson et al.
7,873,540	B2	1/2011	Arumugam
7,873,705	B2	1/2011	Kalish
7,873,985	B2	1/2011	Baum
7,877,090	B2	1/2011	Maes
7,881,199	B2	2/2011	Krstulich
7,881,697	B2	2/2011	Baker et al.
7,882,029	B2	2/2011	White
7,882,247	B2	2/2011	Sturniolo et al.
7,882,560	B2	2/2011	Kraemer et al.
7,885,644	B2	2/2011	Gallagher et al.
7,886,047	B1	2/2011	Potluri
7,889,384	B2	2/2011	Armentrout et al.
7,890,084	B1	2/2011	Dudziak et al.
7,890,111	B2	2/2011	Bugenhagen
7,890,581	B2	2/2011	Rao et al.
7,894,431	B2	2/2011	Goring et al.
7,899,039	B2	3/2011	Andreasen et al.
7,899,438	B2	3/2011	Baker et al.
7,903,553	B2	3/2011	Liu
7,907,970	B2	3/2011	Park et al.
7,908,358	B1	3/2011	Prasad et al.
7,911,975	B2	3/2011	Droz et al.
7,912,025	B2	3/2011	Pattenden et al.
7,912,056	B1	3/2011	Brassem
7,916,707	B2	3/2011	Fontaine
7,917,130	B1	3/2011	Christensen et al.
7,920,529	B1	4/2011	Mahler et al.
7,921,463	B2	4/2011	Sood et al.
7,925,740	B2	4/2011	Nath et al.
7,925,778	B1	4/2011	Wijnands et al.
7,929,446	B2	4/2011	Bozarth et al.
7,929,959	B2	4/2011	DeAtley et al.
7,929,960	B2	4/2011	Martin et al.
7,929,973	B2	4/2011	Zavalkovsky et al.
7,930,327	B2	4/2011	Craft et al.
7,930,446	B2	4/2011	Kesselman et al.
7,930,553	B2	4/2011	Satarasinghe et al.
7,933,274	B2	4/2011	Verma et al.
7,936,736	B2	5/2011	Proctor, Jr. et al.
7,937,069	B2	5/2011	Rassam
7,937,450	B2	5/2011	Janik
7,937,470	B2	5/2011	Curley et al.
7,940,685	B1	5/2011	Breslau et al.
7,940,751	B2	5/2011	Hansen
7,941,184	B2	5/2011	Prendergast et al.
7,944,948	B2	5/2011	Chow et al.
7,945,238	B2	5/2011	Baker et al.
7,945,240	B1	5/2011	Klock et al.
7,945,470	B1	5/2011	Cohen et al.
7,945,945	B2	5/2011	Graham et al.
7,948,952	B2	5/2011	Hurtta et al.
7,948,953	B2	5/2011	Melkote et al.

(56) **References Cited**

U.S. PATENT DOCUMENTS

7,948,968 B2 5/2011 Voit et al.
7,949,529 B2 5/2011 Weider et al.
7,953,808 B2 5/2011 Sharp et al.
7,953,877 B2 5/2011 Vemula et al.
7,957,020 B2 6/2011 Mine et al.
7,957,381 B2 6/2011 Clermidy et al.
7,957,511 B2 6/2011 Drudis et al.
7,958,029 B1 6/2011 Bobich et al.
7,962,622 B2 6/2011 Friend et al.
7,965,983 B1 6/2011 Swan et al.
7,966,405 B2 6/2011 Sundaresan et al.
7,967,682 B2 6/2011 Huizinga
7,969,950 B2 6/2011 Iyer et al.
7,970,350 B2 6/2011 Sheynman
7,970,426 B2 6/2011 Poe et al.
7,974,624 B2 7/2011 Gallagher et al.
7,975,184 B2 7/2011 Goff et al.
7,978,627 B2 7/2011 Taylor et al.
7,978,686 B2 7/2011 Goyal et al.
7,979,069 B2 7/2011 Hupp et al.
7,979,889 B2 7/2011 Gladstone et al.
7,979,896 B2 7/2011 McMurtry et al.
7,984,130 B2 7/2011 Bogineni et al.
7,984,511 B2 7/2011 Kocher et al.
7,986,935 B1 7/2011 D'Souza et al.
7,987,496 B2 7/2011 Bryce et al.
7,987,510 B2 7/2011 Kocher et al.
7,990,049 B2 8/2011 Shioya
8,000,276 B2 8/2011 Scherzer et al.
8,000,318 B2 8/2011 Wiley et al.
8,005,009 B2 8/2011 McKee et al.
8,005,459 B2 8/2011 Balsillie
8,005,726 B1 8/2011 Bao
8,005,913 B1 8/2011 Carlander
8,005,988 B2 8/2011 Maes
8,010,080 B1 8/2011 Thenthiruperai et al.
8,010,081 B1 8/2011 Roskowski
8,010,082 B2 8/2011 Sutaria et al.
8,010,623 B1 8/2011 Fitch et al.
8,010,990 B2 8/2011 Ferguson et al.
8,015,133 B1 9/2011 Wu et al.
8,015,234 B2 9/2011 Lum et al.
8,019,687 B2 9/2011 Wang et al.
8,019,820 B2 9/2011 Son et al.
8,019,846 B2 9/2011 Roelens et al.
8,019,868 B2 9/2011 Rao et al.
8,019,886 B2 9/2011 Harrang et al.
8,023,425 B2 9/2011 Raleigh
8,024,397 B1 9/2011 Erickson et al.
8,024,424 B2 9/2011 Freimuth et al.
8,027,339 B2 9/2011 Short et al.
8,031,601 B2 10/2011 Feroz et al.
8,032,168 B2 10/2011 Ikaheimo
8,032,409 B1 10/2011 Mikurak
8,032,899 B2 10/2011 Archer et al.
8,036,387 B2 10/2011 Kudelski et al.
8,036,600 B2 10/2011 Garrett et al.
8,044,792 B2 10/2011 Orr et al.
8,045,973 B2 10/2011 Chambers
8,046,449 B2 10/2011 Yoshiuchi
8,050,275 B1 11/2011 Iyer
8,050,690 B2 11/2011 Neeraj
8,050,705 B2 11/2011 Sicher et al.
8,054,778 B2 11/2011 Polson
8,059,530 B1 11/2011 Cole
8,060,017 B2 11/2011 Schlicht et al.
8,060,463 B1 11/2011 Spiegel
8,060,603 B2 11/2011 Caunter et al.
8,064,418 B2 11/2011 Maki
8,064,896 B2 11/2011 Bell et al.
8,065,365 B2 11/2011 Saxena et al.
8,068,824 B2 11/2011 Shan et al.
8,068,829 B2 11/2011 Lemond et al.
8,073,427 B2 12/2011 Koch et al.
8,073,721 B1 12/2011 Lewis
8,078,140 B2 12/2011 Baker et al.
8,078,163 B2 12/2011 Lemond et al.
8,085,808 B2 12/2011 Brusca et al.
8,086,398 B2 12/2011 Sanchez et al.
8,086,497 B1 12/2011 Oakes, III
8,086,791 B2 12/2011 Caulkins
8,090,359 B2 1/2012 Proctor, Jr. et al.
8,090,361 B2 1/2012 Hagan
8,090,616 B2 1/2012 Proctor, Jr. et al.
8,091,087 B2 1/2012 Ali et al.
8,094,551 B2 1/2012 Huber et al.
8,095,112 B2 1/2012 Chow et al.
8,095,124 B2 1/2012 Balia
8,095,175 B2 1/2012 Todd et al.
8,095,640 B2 1/2012 Guingo et al.
8,095,666 B2 1/2012 Schmidt et al.
8,098,579 B2 1/2012 Ray et al.
8,099,077 B2 1/2012 Chowdhury et al.
8,099,517 B2 1/2012 Jia et al.
8,102,814 B2 1/2012 Rahman et al.
8,103,285 B2 1/2012 Kalhan
8,104,080 B2 1/2012 Burns et al.
8,107,953 B2 1/2012 Zimmerman et al.
8,108,520 B2 1/2012 Ruutu et al.
8,108,680 B2 1/2012 Murray
8,112,435 B2 2/2012 Epstein et al.
8,116,223 B2 2/2012 Tian et al.
8,116,749 B2 2/2012 Proctor, Jr. et al.
8,116,781 B2 2/2012 Chen et al.
8,121,117 B1 2/2012 Amdahl et al.
8,122,128 B2 2/2012 Burke, II et al.
8,122,249 B2 2/2012 Falk et al.
8,125,897 B2 2/2012 Ray et al.
8,126,123 B2 2/2012 Cai et al.
8,126,396 B2 2/2012 Bennett
8,126,476 B2 2/2012 Vardi et al.
8,126,722 B2 2/2012 Robb et al.
8,130,793 B2 3/2012 Edwards et al.
8,131,256 B2 3/2012 Martti et al.
8,131,281 B1 3/2012 Hildner et al.
8,131,301 B1 3/2012 Ahmed et al.
8,131,840 B1 3/2012 Denker
8,131,858 B2 3/2012 Agulnik et al.
8,132,256 B2 3/2012 Bari
8,134,954 B2 3/2012 Godfrey et al.
8,135,388 B1 3/2012 Gailloux et al.
8,135,392 B2 3/2012 Marcellino et al.
8,135,657 B2 3/2012 Kapoor et al.
8,140,690 B2 3/2012 Ly et al.
8,144,591 B2 3/2012 Ghai et al.
8,144,853 B1 3/2012 Aboujaoude et al.
8,145,194 B2 3/2012 Yoshikawa et al.
8,146,142 B2 3/2012 Lortz et al.
8,149,748 B2 4/2012 Bata et al.
8,149,771 B2 4/2012 Khivesara et al.
8,149,823 B2 4/2012 Turcan et al.
8,150,394 B2 4/2012 Bianconi et al.
8,150,431 B2 4/2012 Wolovitz et al.
8,151,205 B2 4/2012 Follmann et al.
8,152,246 B2 4/2012 Miller et al.
8,155,155 B1 4/2012 Chow et al.
8,155,620 B2 4/2012 Wang et al.
8,155,666 B2 4/2012 Alizadeh-Shabdiz
8,155,670 B2 4/2012 Fullam et al.
8,156,206 B2 4/2012 Kiley et al.
8,159,520 B1 4/2012 Dhanoa et al.
8,160,015 B2 4/2012 Rashid et al.
8,160,056 B2 4/2012 Van der Merwe et al.
8,160,554 B2 4/2012 Gosselin et al.
8,160,555 B2 4/2012 Gosselin et al.
8,160,556 B2 4/2012 Gosselin et al.
8,160,598 B2 4/2012 Savoor
8,165,576 B2 4/2012 Raju et al.
8,166,040 B2 4/2012 Brindisi et al.
8,166,554 B2 4/2012 John
8,170,553 B2 5/2012 Bennett
8,174,378 B2 5/2012 Richman et al.
8,174,970 B2 5/2012 Adamczyk et al.
8,175,574 B1 5/2012 Panda et al.

(56) **References Cited**

U.S. PATENT DOCUMENTS

8,175,966 B2 5/2012 Steinberg et al.
8,180,333 B1 5/2012 Wells et al.
8,180,881 B2 5/2012 Seo et al.
8,180,886 B2 5/2012 Overcash et al.
8,184,530 B1 5/2012 Swan et al.
8,184,590 B2 5/2012 Rosenblatt
8,185,088 B2 5/2012 Klein et al.
8,185,093 B2 5/2012 Jheng et al.
8,185,127 B1 5/2012 Cai et al.
8,185,152 B1 5/2012 Goldner
8,185,158 B2 5/2012 Tamura et al.
8,190,087 B2 5/2012 Fisher et al.
8,190,122 B1 5/2012 Alexander et al.
8,190,675 B2 5/2012 Tribbett
8,191,106 B2 5/2012 Choyi et al.
8,191,116 B1 5/2012 Gazzard
8,191,124 B2 5/2012 Wynn et al.
8,194,549 B2 6/2012 Huber et al.
8,194,553 B2 6/2012 Liang et al.
8,194,572 B2 6/2012 Horvath et al.
8,194,581 B1 6/2012 Schroeder et al.
8,195,093 B2 6/2012 Garrett et al.
8,195,153 B1 6/2012 Frencel et al.
8,195,163 B2 6/2012 Gisby et al.
8,195,661 B2 6/2012 Kalavade
8,196,199 B2 6/2012 Hrastar et al.
8,200,163 B2 6/2012 Hoffman
8,200,200 B1 6/2012 Belser et al.
8,200,509 B2 6/2012 Kenedy et al.
8,200,775 B2 6/2012 Moore
8,200,818 B2 6/2012 Freund et al.
8,204,190 B2 6/2012 Bang et al.
8,204,505 B2 6/2012 Jin et al.
8,204,794 B1 6/2012 Peng et al.
8,208,788 B2 6/2012 Ando et al.
8,208,919 B2 6/2012 Kotecha
8,213,296 B2 7/2012 Shannon et al.
8,213,363 B2 7/2012 Ying et al.
8,214,536 B2 7/2012 Zhao
8,214,890 B2 7/2012 Kirovski et al.
8,219,134 B2 7/2012 Maharajh et al.
8,223,655 B2 7/2012 Heinz et al.
8,223,741 B1 7/2012 Bartlett et al.
8,224,382 B2 7/2012 Bultman
8,224,773 B2 7/2012 Spiegel
8,228,818 B2 7/2012 Chase et al.
8,229,394 B2 7/2012 Karlberg
8,229,914 B2 7/2012 Ramer et al.
8,230,061 B2 7/2012 Hassan et al.
8,233,433 B2 7/2012 Kalhan
8,233,883 B2 7/2012 De Froment
8,233,895 B2 7/2012 Tysowski
8,234,583 B2 7/2012 Sloo et al.
8,238,287 B1 8/2012 Gopi et al.
8,238,913 B1 8/2012 Bhattacharyya et al.
8,239,520 B2 8/2012 Grah
8,242,959 B2 8/2012 Mia et al.
8,244,241 B2 8/2012 Montemurro
8,249,601 B2 8/2012 Emberson et al.
8,254,880 B2 8/2012 Aaltonen et al.
8,254,915 B2 8/2012 Kozisek
8,255,515 B1 8/2012 Melman et al.
8,255,534 B2 8/2012 Assadzadeh
8,255,689 B2 8/2012 Kim et al.
8,259,692 B2 9/2012 Bajko
8,264,965 B2 9/2012 Dolganow et al.
8,265,004 B2 9/2012 Toutonghi
8,266,249 B2 9/2012 Hu
8,266,269 B2 9/2012 Short et al.
8,266,681 B2 9/2012 Deshpande et al.
8,270,955 B2 9/2012 Ramer et al.
8,270,972 B2 9/2012 Otting et al.
8,271,025 B2 9/2012 Brisebois et al.
8,271,045 B2 9/2012 Parolkar et al.
8,271,049 B2 9/2012 Silver et al.
8,271,992 B2 9/2012 Chatley et al.
8,275,415 B2 9/2012 Huslak
8,275,830 B2 9/2012 Raleigh
8,279,067 B2 10/2012 Berger et al.
8,279,864 B2 10/2012 Wood
8,280,351 B1 10/2012 Ahmed et al.
8,280,354 B2 10/2012 Smith et al.
8,284,740 B2 10/2012 O'Connor
8,285,249 B2 10/2012 Baker et al.
8,285,992 B2 10/2012 Mathur et al.
8,290,820 B2 10/2012 Plastina et al.
8,291,238 B2 10/2012 Ginter et al.
8,291,439 B2 10/2012 Jethi et al.
8,296,404 B2 10/2012 McDysan et al.
8,300,575 B2 10/2012 Willars
8,301,513 B1 10/2012 Peng et al.
8,306,505 B2 11/2012 Bennett
8,306,518 B1 11/2012 Gailloux
8,306,741 B2 11/2012 Tu
8,307,067 B2 11/2012 Ryan
8,307,095 B2 11/2012 Clark et al.
8,310,943 B2 11/2012 Mehta et al.
8,315,198 B2 11/2012 Corneille et al.
8,315,593 B2 11/2012 Gallant et al.
8,315,594 B1 11/2012 Mauser et al.
8,315,718 B2 11/2012 Caffrey et al.
8,315,999 B2 11/2012 Chatley et al.
8,320,244 B2 11/2012 Muqattash et al.
8,320,902 B2 11/2012 Moring et al.
8,320,949 B2 11/2012 Matta
8,325,638 B2 12/2012 Jin et al.
8,325,906 B2 12/2012 Fullarton et al.
8,326,319 B2 12/2012 Davis
8,326,359 B2 12/2012 Kauffman
8,326,828 B2 12/2012 Zhou et al.
8,331,223 B2 12/2012 Hill et al.
8,331,293 B2 12/2012 Sood
8,332,375 B2 12/2012 Chatley et al.
8,332,517 B2 12/2012 Russell
8,335,161 B2 12/2012 Foottit et al.
8,339,991 B2 12/2012 Biswas et al.
8,340,625 B1 12/2012 Johnson et al.
8,340,628 B2 12/2012 Taylor et al.
8,340,644 B2 12/2012 Sigmund et al.
8,340,678 B1 12/2012 Pandey
8,340,718 B2 12/2012 Colonna et al.
8,346,023 B2 1/2013 Lin
8,346,210 B2 1/2013 Balsan et al.
8,346,225 B2 1/2013 Raleigh
8,346,923 B2 1/2013 Rowles et al.
8,347,104 B2 1/2013 Pathiyal
8,347,362 B2 1/2013 Cai et al.
8,347,378 B2 1/2013 Merkin et al.
8,350,700 B2 1/2013 Fast et al.
8,351,592 B2 1/2013 Freeny, Jr. et al.
8,351,898 B2 1/2013 Raleigh
8,352,360 B2 1/2013 De Judicibus et al.
8,352,630 B2 1/2013 Hart
8,352,980 B2 1/2013 Howcroft
8,353,001 B2 1/2013 Herrod
8,355,570 B2 1/2013 Karsanbhai et al.
8,355,696 B1 1/2013 Olding et al.
8,356,336 B2 1/2013 Johnston et al.
8,358,638 B2 1/2013 Scherzer et al.
8,358,975 B2 1/2013 Bahl et al.
8,363,658 B1 1/2013 Delker et al.
8,363,799 B2 1/2013 Gruchala et al.
8,364,089 B2 1/2013 Phillips
8,364,806 B2 1/2013 Short et al.
8,369,274 B2 2/2013 Sawai
8,370,477 B2 2/2013 Short et al.
8,370,483 B2 2/2013 Choong et al.
8,374,090 B2 2/2013 Morrill et al.
8,374,102 B2 2/2013 Luft et al.
8,374,592 B2 2/2013 Proctor, Jr. et al.
8,375,128 B2 2/2013 Tofighbakhsh et al.
8,375,136 B2 2/2013 Roman et al.
8,379,847 B2 2/2013 Bell et al.
8,380,247 B2 2/2013 Engstrom

(56) **References Cited**

U.S. PATENT DOCUMENTS

8,380,804 B2 2/2013 Jain et al.
8,385,199 B1 2/2013 Coward et al.
8,385,896 B2 2/2013 Proctor, Jr. et al.
8,385,964 B2 2/2013 Haney
8,385,975 B2 2/2013 Forutanpour et al.
8,386,386 B1 2/2013 Zhu
8,391,262 B2 3/2013 Maki et al.
8,391,834 B2 3/2013 Raleigh
8,392,982 B2 3/2013 Harris et al.
8,396,458 B2 3/2013 Raleigh
8,396,929 B2 3/2013 Helfman et al.
8,401,906 B2 3/2013 Ruckart
8,401,968 B1 3/2013 Schattauer et al.
8,402,165 B2 3/2013 Deu-Ngoc et al.
8,402,540 B2 3/2013 Kapoor et al.
8,406,427 B2 3/2013 Chand et al.
8,406,736 B2 3/2013 Das et al.
8,406,756 B1 3/2013 Reeves et al.
8,407,472 B2 3/2013 Hao et al.
8,407,763 B2 3/2013 Weller et al.
8,411,587 B2 4/2013 Curtis et al.
8,411,691 B2 4/2013 Aggarwal
8,412,798 B1 4/2013 Wang
8,413,245 B2 4/2013 Kraemer et al.
8,418,168 B2 4/2013 Tyhurst et al.
8,422,988 B1 4/2013 Keshav
8,423,016 B2 4/2013 Buckley et al.
8,429,403 B2 4/2013 Moret et al.
8,437,734 B2 5/2013 Ray et al.
8,441,955 B2 5/2013 Wilkinson et al.
8,442,015 B2 5/2013 Behzad et al.
8,442,507 B2 5/2013 Duggal et al.
8,443,390 B2 5/2013 Lo et al.
8,446,831 B2 5/2013 Kwan et al.
8,447,324 B2 5/2013 Shuman et al.
8,447,607 B2 5/2013 Weider et al.
8,447,980 B2 5/2013 Godfrey et al.
8,448,015 B2 5/2013 Gerhart
8,452,858 B2 5/2013 Wu et al.
8,457,603 B2 6/2013 El-Kadri et al.
8,461,958 B2 6/2013 Saenz et al.
8,463,194 B2 6/2013 Erlenback et al.
8,463,232 B2 6/2013 Tuli et al.
8,468,337 B2 6/2013 Gaur et al.
8,472,371 B1 6/2013 Bari et al.
8,477,778 B2 7/2013 Lehmann, Jr. et al.
8,483,135 B2 7/2013 Cai et al.
8,483,694 B2 7/2013 Lewis et al.
8,484,327 B2 7/2013 Werner et al.
8,484,568 B2 7/2013 Rados et al.
8,488,597 B2 7/2013 Nie et al.
8,489,110 B2 7/2013 Frank et al.
8,489,720 B1 7/2013 Morford et al.
8,494,559 B1 7/2013 Malmi
8,495,181 B2 7/2013 Venkatraman et al.
8,495,207 B2 7/2013 Lee
8,495,227 B2 7/2013 Kaminsky et al.
8,495,360 B2 7/2013 Falk et al.
8,495,700 B2 7/2013 Shahbazi
8,495,743 B2 7/2013 Kraemer et al.
8,499,087 B2 7/2013 Hu
RE44,412 E 8/2013 Naqvi et al.
8,500,533 B2 8/2013 Lutnick et al.
8,503,358 B2 8/2013 Hanson et al.
8,503,455 B2 8/2013 Heikens
8,504,032 B2 8/2013 Lott et al.
8,504,574 B2 8/2013 Dvorak et al.
8,504,687 B2 8/2013 Maffione et al.
8,504,690 B2 8/2013 Shah et al.
8,504,729 B2 8/2013 Pezzutti
8,505,073 B2 8/2013 Taglienti et al.
8,509,082 B2 8/2013 Heinz et al.
8,510,743 B2 8/2013 Hackborn et al.
8,510,804 B1 8/2013 Bonn et al.
8,514,927 B2 8/2013 Sundararajan et al.
8,516,552 B2 8/2013 Raleigh
8,520,589 B2 8/2013 Bhatt et al.
8,520,595 B2 8/2013 Yadav et al.
8,521,110 B2 8/2013 Rofougaran
8,521,775 B1 8/2013 Poh et al.
8,522,039 B2 8/2013 Hyndman et al.
8,522,249 B2 8/2013 Beaule
8,522,337 B2 8/2013 Adusumilli et al.
8,523,547 B2 9/2013 Pekrul
8,526,329 B2 9/2013 Mahany et al.
8,526,350 B2 9/2013 Xue et al.
8,527,410 B2 9/2013 Markki et al.
8,527,662 B2 9/2013 Biswas et al.
8,528,068 B1 9/2013 Weglein et al.
8,531,954 B2 9/2013 McNaughton et al.
8,531,995 B2 9/2013 Khan et al.
8,532,610 B2 9/2013 Manning Cassett et al.
8,533,341 B2 9/2013 Aguirre et al.
8,533,775 B2 9/2013 Alcorn et al.
8,535,160 B2 9/2013 Lutnick et al.
8,538,394 B2 9/2013 Zimmerman et al.
8,538,421 B2 9/2013 Brisebois et al.
8,538,458 B2 9/2013 Haney
8,539,544 B2 9/2013 Garimella et al.
8,539,561 B2 9/2013 Gupta et al.
8,543,265 B2 9/2013 Ekhaguere et al.
8,543,814 B2 9/2013 Laitinen et al.
8,544,105 B2 9/2013 Mclean et al.
8,548,427 B2 10/2013 Chow et al.
8,548,428 B2 10/2013 Raleigh
8,549,173 B1 10/2013 Wu et al.
8,554,876 B2 10/2013 Winsor
8,559,369 B2 10/2013 Barkan
8,561,138 B2 10/2013 Rothman et al.
8,565,746 B2 10/2013 Hoffman
8,566,236 B2 10/2013 Busch
8,571,474 B2 10/2013 Chavez et al.
8,571,501 B2 10/2013 Miller et al.
8,571,598 B2 10/2013 Valavi
8,571,993 B2 10/2013 Kocher et al.
8,572,117 B2 10/2013 Rappaport
8,572,256 B2 10/2013 Babbar
8,583,499 B2 11/2013 De Judicibus et al.
8,584,226 B2 11/2013 Kudla et al.
8,588,240 B2 11/2013 Ramankutty et al.
8,589,541 B2 11/2013 Raleigh et al.
8,589,955 B2 11/2013 Roundtree et al.
8,594,626 B1 11/2013 Woodson et al.
8,594,665 B2 11/2013 Anschutz
8,595,186 B1 11/2013 Mandyam et al.
8,600,850 B2 12/2013 Zabawskyj et al.
8,600,895 B2 12/2013 Felsher
8,601,125 B2 12/2013 Huang et al.
8,605,691 B2 12/2013 Soomro et al.
8,611,919 B2 12/2013 Barnes, Jr.
8,615,507 B2 12/2013 Varadarajulu et al.
8,619,735 B2 12/2013 Montemurro et al.
8,620,257 B2 12/2013 Qiu et al.
8,620,281 B2 12/2013 Gosselin et al.
8,621,056 B2 12/2013 Coussemaeker et al.
8,624,733 B2 * 1/2014 Cusack, Jr. G07C 9/00103 340/5.1
8,630,314 B2 1/2014 York
8,631,428 B2 1/2014 Scott et al.
8,634,425 B2 1/2014 Gorti et al.
8,635,164 B2 1/2014 Rosenhaft et al.
8,635,335 B2 1/2014 Raleigh et al.
8,639,215 B2 1/2014 McGregor et al.
8,644,702 B1 2/2014 Kalajan
8,644,813 B1 2/2014 Gailloux et al.
8,645,518 B2 2/2014 David
8,654,952 B2 2/2014 Wang et al.
8,655,357 B1 2/2014 Gazzard et al.
8,656,472 B2 2/2014 McMurtry et al.
8,660,853 B2 2/2014 Robb et al.
8,666,395 B2 3/2014 Silver
8,667,542 B1 3/2014 Benz et al.
8,670,334 B2 3/2014 Keohane et al.
8,670,752 B2 3/2014 Fan et al.

(56) **References Cited**

U.S. PATENT DOCUMENTS

8,675,507	B2	3/2014	Raleigh
8,675,852	B2	3/2014	Maes
8,676,682	B2	3/2014	Kalliola
8,676,925	B1	3/2014	Liu et al.
8,688,671	B2	4/2014	Ramer et al.
8,688,784	B2	4/2014	Zabawskyj et al.
8,693,323	B1	4/2014	McDysan
8,694,772	B2	4/2014	Kao et al.
8,700,729	B2	4/2014	Dua
8,701,015	B2	4/2014	Bonnat
8,701,080	B2	4/2014	Tripathi
8,705,361	B2	4/2014	Venkataraman et al.
8,706,863	B2	4/2014	Fadell
8,713,535	B2	4/2014	Malhotra et al.
8,713,641	B1	4/2014	Pagan et al.
8,719,397	B2	5/2014	Levi et al.
8,719,423	B2	5/2014	Wyld
8,724,486	B2	5/2014	Seto et al.
8,725,700	B2	5/2014	Rappaport
8,725,899	B2	5/2014	Short et al.
8,730,842	B2	5/2014	Collins et al.
8,731,519	B2	5/2014	Flynn et al.
8,732,808	B2	5/2014	Sewall et al.
8,738,860	B1	5/2014	Griffin et al.
8,739,035	B2	5/2014	Trethewey
8,744,339	B2	6/2014	Halfmann et al.
8,761,711	B2	6/2014	Grignani et al.
8,761,809	B2	6/2014	Faith et al.
8,775,233	B1	7/2014	Lybrook et al.
8,780,857	B2	7/2014	Balasubramanian et al.
8,787,249	B2	7/2014	Giaretta et al.
8,793,304	B2	7/2014	Lu et al.
8,793,758	B2	7/2014	Raleigh et al.
8,804,517	B2	8/2014	Oerton
8,804,695	B2	8/2014	Branam
8,811,338	B2	8/2014	Jin et al.
8,811,991	B2	8/2014	Jain et al.
8,812,525	B1	8/2014	Taylor, III
8,818,394	B2	8/2014	Bienas et al.
8,819,253	B2	8/2014	Simeloff et al.
8,825,109	B2	9/2014	Montemurro et al.
8,826,411	B2	9/2014	Moen et al.
8,831,561	B2	9/2014	Sutaria et al.
8,837,322	B2	9/2014	Venkataramanan et al.
8,838,686	B2	9/2014	Getchius
8,838,752	B2	9/2014	Lor et al.
8,843,849	B2	9/2014	Neil et al.
8,845,415	B2	9/2014	Lutnick et al.
8,849,262	B2	9/2014	Desai et al.
8,849,297	B2	9/2014	Balasubramanian
8,855,620	B2	10/2014	Sievers et al.
8,856,015	B2	10/2014	Mesaros
8,862,751	B2	10/2014	Faccin et al.
8,863,111	B2	10/2014	Selitser et al.
8,868,725	B2	10/2014	Samba
8,868,727	B2	10/2014	Yumerefendi et al.
8,875,042	B2	10/2014	LeJeune et al.
8,880,047	B2	11/2014	Konicek et al.
8,891,483	B2	11/2014	Connelly et al.
8,898,748	B2	11/2014	Burks et al.
8,908,516	B2	12/2014	Tzamaloukas et al.
8,929,374	B2	1/2015	Tönsing et al.
8,930,238	B2	1/2015	Coffman et al.
8,943,551	B2	1/2015	Ganapathy et al.
8,948,198	B2	2/2015	Nee et al.
8,948,726	B2	2/2015	Smith et al.
8,949,382	B2	2/2015	Cornett et al.
8,949,597	B1	2/2015	Reeves et al.
8,955,038	B2	2/2015	Nicodemus et al.
8,966,018	B2	2/2015	Bugwadia et al.
8,971,841	B2	3/2015	Menezes et al.
8,971,912	B2	3/2015	Chou et al.
8,977,284	B2	3/2015	Reed
8,995,952	B1	3/2015	Baker et al.
9,002,342	B2	4/2015	Tenhunen et al.
9,008,653	B2	4/2015	Sparks et al.
9,014,059	B2	4/2015	Richardson et al.
9,014,973	B2	4/2015	Ruckart
9,015,331	B2	4/2015	Lai et al.
9,030,934	B2	5/2015	Shah et al.
9,032,427	B2	5/2015	Gallant et al.
9,049,010	B2	6/2015	Jueneman et al.
9,064,275	B1	6/2015	Lu et al.
9,105,031	B2	8/2015	Shen et al.
9,106,414	B2 *	8/2015	Laves G06Q 30/04
9,107,053	B2	8/2015	Davis et al.
9,111,088	B2	8/2015	Ghai et al.
9,135,037	B1	9/2015	Petrescu-Prahova et al.
9,137,286	B1	9/2015	Yuan
9,143,933	B2	9/2015	Ikeda et al.
9,172,553	B2	10/2015	Dawes et al.
9,173,090	B2	10/2015	Tuchman et al.
9,177,455	B2	11/2015	Remer
9,183,524	B2	11/2015	Carter
9,262,370	B2	2/2016	Hofstaedter et al.
9,277,433	B2	3/2016	Raleigh et al.
9,282,460	B2	3/2016	Souissi
9,286,469	B2	3/2016	Kraemer et al.
9,286,604	B2	3/2016	Aabye et al.
9,288,276	B2	3/2016	Adamczyk et al.
9,313,708	B2	4/2016	Nam et al.
9,325,737	B2	4/2016	Gutowski et al.
9,326,173	B2	4/2016	Luft
9,344,557	B2	5/2016	Gruchala et al.
9,350,842	B2	5/2016	Swanburg et al.
9,363,285	B2	6/2016	Kitamura
9,367,680	B2	6/2016	Mahaffey et al.
9,402,254	B2	7/2016	Kneckt et al.
9,413,546	B2	8/2016	Meier et al.
9,418,381	B2	8/2016	Ahuja et al.
9,419,867	B2	8/2016	Okholm et al.
9,436,805	B1	9/2016	Kravets
9,479,917	B1	10/2016	Gota et al.
9,501,803	B2	11/2016	Bilac et al.
9,534,861	B1	1/2017	Kellgren
9,544,397	B2	1/2017	Raleigh et al.
9,557,889	B2	1/2017	Raleigh et al.
9,589,117	B2	3/2017	Ali et al.
9,609,459	B2	3/2017	Raleigh
9,609,510	B2	3/2017	Raleigh et al.
9,609,544	B2	3/2017	Raleigh et al.
9,615,192	B2	4/2017	Raleigh
9,634,850	B2	4/2017	Taft et al.
9,642,004	B2	5/2017	Wang et al.
9,648,022	B2	5/2017	Peterka et al.
9,673,996	B1	6/2017	Upadhyay et al.
9,680,658	B2	6/2017	Goel et al.
9,681,003	B1	6/2017	Kim et al.
9,691,082	B1	6/2017	Burnett et al.
9,712,443	B1	7/2017	Phaal
9,749,899	B2	8/2017	Raleigh et al.
9,755,842	B2	9/2017	Raleigh et al.
9,923,790	B2	3/2018	Patel et al.
9,954,975	B2	4/2018	Raleigh et al.
9,986,413	B2	5/2018	Raleigh
10,002,332	B2	6/2018	Spong
10,024,948	B2	7/2018	Ganick et al.
10,034,220	B2 *	7/2018	Silver H04Q 3/0025
10,057,775	B2	8/2018	Raleigh et al.
10,064,033	B2	8/2018	Raleigh
10,171,681	B2	1/2019	Raleigh et al.
10,171,988	B2	1/2019	Raleigh et al.
10,171,990	B2	1/2019	Raleigh et al.
10,237,773	B2	3/2019	Raleigh et al.
10,248,996	B2	4/2019	Raleigh
10,264,138	B2	4/2019	Raleigh et al.
10,321,515	B2	6/2019	Shen et al.
10,462,627	B2	10/2019	Raleigh et al.
10,521,781	B1 *	12/2019	Singfield G06Q 20/042
10,523,726	B2	12/2019	Pantos et al.
10,567,930	B2 *	2/2020	Silver H04L 65/104
10,616,818	B2 *	4/2020	Silver H04L 65/102
2001/0048738	A1	12/2001	Baniak et al.
2001/0053694	A1	12/2001	Igarashi et al.

(56) **References Cited**

U.S. PATENT DOCUMENTS

2002/0013844 A1 1/2002 Garrett et al.
2002/0022472 A1 2/2002 Watler et al.
2002/0022483 A1 2/2002 Thompson et al.
2002/0049074 A1 4/2002 Eisinger et al.
2002/0099848 A1 7/2002 Lee
2002/0116338 A1 8/2002 Gonthier et al.
2002/0120370 A1 8/2002 Parupudi et al.
2002/0120540 A1 8/2002 Kende et al.
2002/0131397 A1 9/2002 Patel et al.
2002/0131404 A1 9/2002 Mehta et al.
2002/0138599 A1 9/2002 Dilman et al.
2002/0138601 A1 9/2002 Piponius et al.
2002/0154751 A1 10/2002 Thompson et al.
2002/0161601 A1 10/2002 Nauer et al.
2002/0164983 A1 11/2002 Raviv et al.
2002/0176377 A1 11/2002 Hamilton
2002/0188732 A1 12/2002 Buckman et al.
2002/0191573 A1 12/2002 Whitehill et al.
2002/0199001 A1 12/2002 Wenocur et al.
2003/0004937 A1 1/2003 Salmenkaita et al.
2003/0005112 A1 1/2003 Krautkremer
2003/0013434 A1 1/2003 Rosenberg et al.
2003/0018524 A1 1/2003 Fishman et al.
2003/0028623 A1 2/2003 Hennessey et al.
2003/0046396 A1 3/2003 Richter et al.
2003/0050070 A1 3/2003 Mashinsky et al.
2003/0050837 A1 3/2003 Kim
2003/0060189 A1 3/2003 Minear et al.
2003/0084321 A1 5/2003 Tarquini et al.
2003/0088671 A1 5/2003 Klinker et al.
2003/0133408 A1 7/2003 Cheng et al.
2003/0134650 A1 7/2003 Sundar et al.
2003/0159030 A1 8/2003 Evans
2003/0161265 A1 8/2003 Cao et al.
2003/0171112 A1 9/2003 Lupper et al.
2003/0182420 A1 9/2003 Jones et al.
2003/0182435 A1 9/2003 Redlich et al.
2003/0184793 A1 10/2003 Pineau
2003/0188006 A1 10/2003 Bard
2003/0188117 A1 10/2003 Yoshino et al.
2003/0191646 A1 10/2003 D'Avello et al.
2003/0220984 A1 11/2003 Jones et al.
2003/0224781 A1 12/2003 Milford et al.
2003/0229900 A1 12/2003 Reisman
2003/0233332 A1 12/2003 Keeler et al.
2003/0236745 A1 12/2003 Hartsell et al.
2004/0019539 A1 1/2004 Raman et al.
2004/0019564 A1 1/2004 Goldthwaite et al.
2004/0021697 A1 2/2004 Beaton et al.
2004/0024756 A1 2/2004 Rickard
2004/0030705 A1 2/2004 Bowman-Amuah
2004/0039792 A1 2/2004 Nakanishi
2004/0044623 A1 3/2004 Wake et al.
2004/0047358 A1 3/2004 Chen et al.
2004/0054779 A1 3/2004 Takeshima et al.
2004/0073672 A1 4/2004 Fascenda
2004/0082346 A1 4/2004 Skytt et al.
2004/0098715 A1 5/2004 Aghera et al.
2004/0102182 A1 5/2004 Reith et al.
2004/0103193 A1 5/2004 Pandya et al.
2004/0107360 A1 6/2004 Herrmann et al.
2004/0114553 A1 6/2004 Jiang et al.
2004/0116140 A1 6/2004 Babbar et al.
2004/0123153 A1 6/2004 Wright et al.
2004/0127200 A1 7/2004 Shaw et al.
2004/0127208 A1 7/2004 Nair et al.
2004/0127256 A1 7/2004 Goldthwaite et al.
2004/0132427 A1 7/2004 Lee et al.
2004/0133668 A1 7/2004 Nicholas, III
2004/0137890 A1 7/2004 Kalke
2004/0165596 A1 8/2004 Garcia et al.
2004/0167958 A1 8/2004 Stewart et al.
2004/0168052 A1 8/2004 Clisham et al.
2004/0170191 A1 9/2004 Guo et al.
2004/0176104 A1 9/2004 Arcens
2004/0198331 A1 10/2004 Coward et al.
2004/0203755 A1 10/2004 Brunet et al.
2004/0203833 A1 10/2004 Rathunde et al.
2004/0225561 A1 11/2004 Hertzberg et al.
2004/0225898 A1 11/2004 Frost et al.
2004/0236547 A1 11/2004 Rappaport et al.
2004/0243680 A1 12/2004 Mayer
2004/0243992 A1 12/2004 Gustafson et al.
2004/0249918 A1 12/2004 Sunshine
2004/0255145 A1 12/2004 Chow
2004/0259534 A1 12/2004 Chaudhari et al.
2004/0260766 A1 12/2004 Barros et al.
2004/0267872 A1 12/2004 Serdy et al.
2005/0007993 A1 1/2005 Chambers et al.
2005/0009499 A1 1/2005 Koster
2005/0021995 A1 1/2005 Lal et al.
2005/0041617 A1 2/2005 Huotari et al.
2005/0048950 A1 3/2005 Morper
2005/0055291 A1 3/2005 Bevente et al.
2005/0055309 A1 3/2005 Williams et al.
2005/0055595 A1 3/2005 Frazer et al.
2005/0060266 A1 3/2005 Demello et al.
2005/0060525 A1 3/2005 Schwartz et al.
2005/0075115 A1 4/2005 Corneille et al.
2005/0079863 A1 4/2005 Macaluso
2005/0091505 A1 4/2005 Riley et al.
2005/0096024 A1 5/2005 Bicker et al.
2005/0097516 A1 5/2005 Donnelly et al.
2005/0107091 A1 5/2005 Vannithamby et al.
2005/0108075 A1 5/2005 Douglis et al.
2005/0111463 A1 5/2005 Leung et al.
2005/0128967 A1 6/2005 Scobbie
2005/0135264 A1 6/2005 Popoff et al.
2005/0163320 A1 7/2005 Brown et al.
2005/0166043 A1 7/2005 Zhang et al.
2005/0183143 A1 8/2005 Anderholm et al.
2005/0186948 A1 8/2005 Gallagher et al.
2005/0198377 A1 9/2005 Ferguson et al.
2005/0216421 A1 9/2005 Barry et al.
2005/0226178 A1 10/2005 Forand et al.
2005/0228985 A1 10/2005 Ylikoski et al.
2005/0238046 A1 10/2005 Hassan et al.
2005/0239447 A1 10/2005 Holzman et al.
2005/0245241 A1 11/2005 Durand et al.
2005/0246282 A1 11/2005 Naslund et al.
2005/0250508 A1 11/2005 Guo et al.
2005/0250536 A1 11/2005 Deng et al.
2005/0254435 A1 11/2005 Moakley et al.
2005/0266825 A1 12/2005 Clayton
2005/0266880 A1 12/2005 Gupta
2006/0014519 A1 1/2006 Marsh et al.
2006/0019632 A1 1/2006 Cunningham et al.
2006/0020787 A1 1/2006 Choyi et al.
2006/0026679 A1 2/2006 Zakas
2006/0030306 A1 2/2006 Kuhn
2006/0034256 A1 2/2006 Addagatla et al.
2006/0035631 A1 2/2006 White et al.
2006/0040642 A1 2/2006 Boris et al.
2006/0045245 A1 3/2006 Aaron et al.
2006/0048223 A1 3/2006 Lee et al.
2006/0068796 A1 3/2006 Millen et al.
2006/0072451 A1 4/2006 Ross
2006/0072550 A1 4/2006 Davis et al.
2006/0072646 A1 4/2006 Feher
2006/0075506 A1 4/2006 Sanda et al.
2006/0085543 A1 4/2006 Hrastar et al.
2006/0095517 A1 5/2006 O'Connor et al.
2006/0098627 A1 5/2006 Karaoguz et al.
2006/0099970 A1 5/2006 Morgan et al.
2006/0101507 A1 5/2006 Camenisch
2006/0112016 A1 5/2006 Ishibashi
2006/0114821 A1 6/2006 Willey et al.
2006/0114832 A1 6/2006 Hamilton et al.
2006/0126562 A1 6/2006 Liu
2006/0135144 A1 6/2006 Jothipragasam
2006/0136882 A1 6/2006 Noonan et al.
2006/0143066 A1 6/2006 Calabria
2006/0143098 A1 6/2006 Lazaridis
2006/0156398 A1 7/2006 Ross et al.

(56) **References Cited**

U.S. PATENT DOCUMENTS

2006/0160536 A1 7/2006 Chou
2006/0165060 A1 7/2006 Dua
2006/0168128 A1 7/2006 Sistla et al.
2006/0173959 A1 8/2006 Mckelvie et al.
2006/0174035 A1 8/2006 Tufail
2006/0178917 A1 8/2006 Merriam et al.
2006/0178918 A1 8/2006 Mikurak
2006/0178943 A1 8/2006 Rollinson et al.
2006/0182137 A1 8/2006 Zhou et al.
2006/0183462 A1 8/2006 Kolehmainen
2006/0190314 A1 8/2006 Hernandez
2006/0190987 A1 8/2006 Ohta et al.
2006/0193280 A1 8/2006 Lee et al.
2006/0199608 A1 9/2006 Dunn et al.
2006/0200663 A1 9/2006 Thornton
2006/0206709 A1 9/2006 Labrou et al.
2006/0206904 A1 9/2006 Watkins et al.
2006/0218395 A1 9/2006 Maes
2006/0221829 A1 10/2006 Holmstrom et al.
2006/0233108 A1 10/2006 Krishnan
2006/0233166 A1 10/2006 Bou-Diab et al.
2006/0236095 A1 10/2006 Smith et al.
2006/0242685 A1 10/2006 Heard et al.
2006/0258341 A1 11/2006 Miller et al.
2006/0277590 A1 12/2006 Limont et al.
2006/0291419 A1 12/2006 McConnell et al.
2006/0291477 A1 12/2006 Croak et al.
2007/0005795 A1 1/2007 Gonzalez
2007/0019670 A1 1/2007 Falardeau
2007/0022289 A1 1/2007 Alt et al.
2007/0025301 A1 2/2007 Petersson et al.
2007/0033194 A1 2/2007 Srinivas et al.
2007/0033197 A1 2/2007 Scherzer et al.
2007/0036312 A1 2/2007 Cai et al.
2007/0038763 A1 2/2007 Oestvall
2007/0055694 A1 3/2007 Ruge et al.
2007/0060200 A1 3/2007 Boris et al.
2007/0061243 A1 3/2007 Ramer et al.
2007/0061800 A1 3/2007 Cheng et al.
2007/0061878 A1 3/2007 Hagiu et al.
2007/0073899 A1 3/2007 Judge et al.
2007/0076616 A1 4/2007 Ngo et al.
2007/0093243 A1 4/2007 Kapadekar et al.
2007/0100981 A1 5/2007 Adamczyk et al.
2007/0101426 A1 5/2007 Lee et al.
2007/0104126 A1 5/2007 Calhoun et al.
2007/0109983 A1 5/2007 Shankar et al.
2007/0111740 A1 5/2007 Wandel
2007/0124077 A1 5/2007 Hedlund
2007/0130283 A1 6/2007 Klein et al.
2007/0130315 A1 6/2007 Friend et al.
2007/0140113 A1 6/2007 Gemelos
2007/0140145 A1 6/2007 Kumar et al.
2007/0140275 A1 6/2007 Bowman et al.
2007/0143824 A1 6/2007 Shahbazi
2007/0147317 A1 6/2007 Smith et al.
2007/0147324 A1 6/2007 McGary
2007/0155365 A1 7/2007 Kim et al.
2007/0165630 A1 7/2007 Rasanen et al.
2007/0168499 A1 7/2007 Chu
2007/0171856 A1 7/2007 Bruce et al.
2007/0174490 A1 7/2007 Choi et al.
2007/0191006 A1 8/2007 Carpenter
2007/0192460 A1 8/2007 Choi et al.
2007/0198656 A1 8/2007 Mazzaferri et al.
2007/0201502 A1 8/2007 Abramson
2007/0213054 A1 9/2007 Han
2007/0220251 A1 9/2007 Rosenberg et al.
2007/0226225 A1 9/2007 Yiu et al.
2007/0226775 A1 9/2007 Andreasen et al.
2007/0234402 A1 10/2007 Khosravi et al.
2007/0242619 A1 10/2007 Murakami et al.
2007/0242659 A1 10/2007 Cantu et al.
2007/0243862 A1 10/2007 Coskun et al.
2007/0248100 A1 10/2007 Zuberi et al.
2007/0254646 A1 11/2007 Sokondar
2007/0254675 A1 11/2007 Zorlu Ozer et al.
2007/0255769 A1 11/2007 Agrawal et al.
2007/0255797 A1 11/2007 Dunn et al.
2007/0255848 A1 11/2007 Sewall et al.
2007/0256128 A1 11/2007 Jung et al.
2007/0257767 A1 11/2007 Beeson
2007/0259656 A1 11/2007 Jeong
2007/0259673 A1 11/2007 Willars et al.
2007/0263558 A1 11/2007 Salomone
2007/0265003 A1 11/2007 Kezys et al.
2007/0266422 A1 11/2007 Germano et al.
2007/0274327 A1 11/2007 Kaarela et al.
2007/0280453 A1 12/2007 Kelley
2007/0282896 A1 12/2007 Wydroug et al.
2007/0293191 A1 12/2007 Mir et al.
2007/0294395 A1 12/2007 Strub et al.
2007/0294410 A1 12/2007 Pandya et al.
2007/0297378 A1 12/2007 Poyhonen et al.
2007/0298764 A1 12/2007 Clayton
2007/0299965 A1 12/2007 Nieh et al.
2007/0300252 A1 12/2007 Acharya et al.
2008/0005285 A1 1/2008 Robinson et al.
2008/0005561 A1 1/2008 Brown et al.
2008/0010379 A1 1/2008 Zhao
2008/0010452 A1 1/2008 Holtzman et al.
2008/0018494 A1 1/2008 Waite et al.
2008/0022354 A1 1/2008 Grewal et al.
2008/0025230 A1 1/2008 Patel et al.
2008/0032715 A1 2/2008 Jia et al.
2008/0034063 A1 2/2008 Yee
2008/0034419 A1 2/2008 Mullick et al.
2008/0039102 A1 2/2008 Sewall et al.
2008/0049630 A1 2/2008 Kozisek et al.
2008/0050715 A1 2/2008 Golczewski et al.
2008/0051076 A1 2/2008 O'Shaughnessy et al.
2008/0052387 A1 2/2008 Heinz et al.
2008/0056273 A1 3/2008 Pelletier et al.
2008/0057894 A1 3/2008 Aleksic et al.
2008/0059474 A1 3/2008 Lim
2008/0059743 A1 3/2008 Bychkov et al.
2008/0060066 A1 3/2008 Wynn et al.
2008/0062900 A1 3/2008 Rao
2008/0064367 A1 3/2008 Nath et al.
2008/0066149 A1 3/2008 Lim
2008/0066150 A1 3/2008 Lim
2008/0066181 A1 3/2008 Haveson et al.
2008/0070550 A1 3/2008 Hose
2008/0077705 A1 3/2008 Li et al.
2008/0080457 A1 4/2008 Cole
2008/0081606 A1 4/2008 Cole
2008/0082643 A1 4/2008 Storrie et al.
2008/0083013 A1 4/2008 Soliman et al.
2008/0085707 A1 4/2008 Fadell
2008/0089295 A1 4/2008 Keeler et al.
2008/0089303 A1 4/2008 Wirtanen et al.
2008/0095339 A1 4/2008 Elliott et al.
2008/0096559 A1 4/2008 Phillips et al.
2008/0098062 A1 4/2008 Balia
2008/0101291 A1 5/2008 Jiang et al.
2008/0109679 A1 5/2008 Wright et al.
2008/0120129 A1 5/2008 Seubert et al.
2008/0120668 A1 5/2008 Yau
2008/0120688 A1 5/2008 Qiu et al.
2008/0125079 A1 5/2008 O'Neil et al.
2008/0126287 A1 5/2008 Cox et al.
2008/0127304 A1 5/2008 Ginter et al.
2008/0130534 A1 6/2008 Tomioka
2008/0130656 A1 6/2008 Kim et al.
2008/0132201 A1 6/2008 Karlberg
2008/0132268 A1 6/2008 Choi-Grogan et al.
2008/0134330 A1 6/2008 Kapoor et al.
2008/0139210 A1 6/2008 Gisby et al.
2008/0147454 A1 6/2008 Walker et al.
2008/0148402 A1 6/2008 Bogineni et al.
2008/0160958 A1 7/2008 Abichandani et al.
2008/0162637 A1 7/2008 Adamczyk et al.
2008/0162704 A1 7/2008 Poplett et al.
2008/0164304 A1 7/2008 Narasimhan et al.

(56) **References Cited**

U.S. PATENT DOCUMENTS

2008/0166993 A1 7/2008 Gautier et al.
2008/0167027 A1 7/2008 Gautier et al.
2008/0167033 A1 7/2008 Beckers
2008/0168275 A1 7/2008 DeAtley et al.
2008/0168523 A1 7/2008 Ansari et al.
2008/0177998 A1 7/2008 Apsangi et al.
2008/0178300 A1 7/2008 Brown et al.
2008/0183811 A1 7/2008 Kotras et al.
2008/0183812 A1 7/2008 Paul et al.
2008/0184127 A1 7/2008 Rafey et al.
2008/0189760 A1 8/2008 Rosenberg et al.
2008/0201266 A1 8/2008 Chua et al.
2008/0207167 A1 8/2008 Bugenhagen
2008/0212470 A1 9/2008 Castaneda et al.
2008/0212751 A1 9/2008 Chung
2008/0219268 A1 9/2008 Dennison
2008/0221951 A1 9/2008 Stanforth et al.
2008/0222692 A1 9/2008 Andersson et al.
2008/0225748 A1 9/2008 Khemani et al.
2008/0229385 A1 9/2008 Feder et al.
2008/0229388 A1 9/2008 Maes
2008/0235511 A1 9/2008 O'Brien et al.
2008/0240373 A1 10/2008 Wilhelm
2008/0242290 A1 10/2008 Bhatia et al.
2008/0250053 A1 10/2008 Aaltonen et al.
2008/0256593 A1 10/2008 Vinberg et al.
2008/0259924 A1 10/2008 Gooch et al.
2008/0262798 A1 10/2008 Kim et al.
2008/0263348 A1 10/2008 Zaltsman et al.
2008/0268813 A1 10/2008 Maes
2008/0270212 A1 10/2008 Blight et al.
2008/0279216 A1 11/2008 Sharif-Ahmadi et al.
2008/0282319 A1 11/2008 Fontijn et al.
2008/0293395 A1 11/2008 Mathews et al.
2008/0298230 A1 12/2008 Luft et al.
2008/0305793 A1 12/2008 Gallagher et al.
2008/0311885 A1 12/2008 Dawson et al.
2008/0313315 A1 12/2008 Karaoguz et al.
2008/0313730 A1 12/2008 Iftimie et al.
2008/0316923 A1 12/2008 Fedders et al.
2008/0316983 A1 12/2008 Daigle
2008/0318547 A1 12/2008 Ballou et al.
2008/0318550 A1 12/2008 DeAtley
2008/0319879 A1 12/2008 Carroll et al.
2008/0320497 A1 12/2008 Tarkoma et al.
2009/0005000 A1 1/2009 Baker et al.
2009/0005005 A1 1/2009 Forstall et al.
2009/0006116 A1 1/2009 Baker et al.
2009/0006200 A1 1/2009 Baker et al.
2009/0006229 A1 1/2009 Sweeney et al.
2009/0013157 A1 1/2009 Beaule
2009/0016310 A1 1/2009 Rasal
2009/0017809 A1 1/2009 Jethi et al.
2009/0036111 A1 2/2009 Danford et al.
2009/0042536 A1 2/2009 Bernard et al.
2009/0044185 A1 2/2009 Krivopaltsev
2009/0046707 A1 2/2009 Smires et al.
2009/0046723 A1 2/2009 Rahman et al.
2009/0047989 A1 2/2009 Harmon et al.
2009/0048913 A1 2/2009 Shenfield et al.
2009/0049156 A1 2/2009 Aronsson et al.
2009/0049518 A1 2/2009 Roman et al.
2009/0054030 A1 2/2009 Golds
2009/0054061 A1 2/2009 Dawson et al.
2009/0065571 A1 3/2009 Jain
2009/0067372 A1 3/2009 Shah et al.
2009/0068984 A1 3/2009 Burnett
2009/0070379 A1 3/2009 Rappaport
2009/0077622 A1 3/2009 Baum et al.
2009/0079699 A1 3/2009 Sun
2009/0109898 A1 4/2009 Adams et al.
2009/0113514 A1 4/2009 Hu
2009/0125619 A1 5/2009 Antani
2009/0132860 A1 5/2009 Liu et al.
2009/0149154 A1 6/2009 Bhasin et al.
2009/0157792 A1 6/2009 Fiatal
2009/0163173 A1 6/2009 Williams
2009/0170554 A1 7/2009 Want et al.
2009/0172077 A1 7/2009 Roxburgh et al.
2009/0180391 A1 7/2009 Petersen et al.
2009/0181662 A1 7/2009 Fleischman et al.
2009/0197585 A1 8/2009 Aaron
2009/0197612 A1 8/2009 Kiiskinen
2009/0203352 A1 8/2009 Fordon et al.
2009/0217364 A1 8/2009 Salmela et al.
2009/0219170 A1 9/2009 Clark et al.
2009/0248883 A1 10/2009 Suryanarayana et al.
2009/0254857 A1 10/2009 Romine et al.
2009/0257379 A1 10/2009 Robinson et al.
2009/0261783 A1 10/2009 Gonzales et al.
2009/0271514 A1 10/2009 Thomas et al.
2009/0282127 A1 11/2009 Leblanc et al.
2009/0286507 A1 11/2009 O'Neil et al.
2009/0287921 A1 11/2009 Zhu et al.
2009/0288140 A1 11/2009 Huber et al.
2009/0291665 A1 11/2009 Gaskarth et al.
2009/0299857 A1 12/2009 Brubaker
2009/0307696 A1 12/2009 Vals et al.
2009/0307746 A1 12/2009 Di et al.
2009/0315735 A1 12/2009 Bhavani et al.
2009/0320110 A1 12/2009 Nicolson et al.
2010/0010873 A1 1/2010 Moreau
2010/0017506 A1 1/2010 Fadell
2010/0020822 A1 1/2010 Zerillo et al.
2010/0027469 A1 2/2010 Gurajala et al.
2010/0027525 A1 2/2010 Zhu
2010/0027559 A1 2/2010 Lin et al.
2010/0030890 A1 2/2010 Dutta et al.
2010/0041364 A1 2/2010 Lott et al.
2010/0041365 A1 2/2010 Lott et al.
2010/0042675 A1 2/2010 Fujii
2010/0043068 A1 2/2010 Varadhan et al.
2010/0046373 A1 2/2010 Smith et al.
2010/0069074 A1 3/2010 Kodialam et al.
2010/0071053 A1 3/2010 Ansari et al.
2010/0075666 A1 3/2010 Garner
2010/0080202 A1 4/2010 Hanson
2010/0082431 A1 4/2010 Ramer et al.
2010/0103820 A1 4/2010 Fuller et al.
2010/0113020 A1 5/2010 Subramanian et al.
2010/0121744 A1 5/2010 Belz et al.
2010/0131584 A1 5/2010 Johnson
2010/0142478 A1 6/2010 Forssell et al.
2010/0144310 A1 6/2010 Bedingfield
2010/0151866 A1 6/2010 Karpov et al.
2010/0153781 A1 6/2010 Hanna
2010/0167696 A1 7/2010 Smith et al.
2010/0188975 A1 7/2010 Raleigh
2010/0188990 A1 7/2010 Raleigh
2010/0188992 A1 7/2010 Raleigh
2010/0188994 A1 7/2010 Raleigh
2010/0190469 A1 7/2010 Vanderveen et al.
2010/0191576 A1 7/2010 Raleigh
2010/0191612 A1 7/2010 Raleigh
2010/0191846 A1 7/2010 Raleigh
2010/0192170 A1 7/2010 Raleigh
2010/0192212 A1 7/2010 Raleigh
2010/0195503 A1 8/2010 Raleigh
2010/0197268 A1 8/2010 Raleigh
2010/0198698 A1 8/2010 Raleigh et al.
2010/0198939 A1 8/2010 Raleigh
2010/0227632 A1 9/2010 Bell et al.
2010/0235329 A1 9/2010 Koren et al.
2010/0241544 A1 9/2010 Benson et al.
2010/0248719 A1 9/2010 Scholaert
2010/0254387 A1 10/2010 Trinh et al.
2010/0284327 A1 11/2010 Miklos
2010/0284388 A1 11/2010 Fantini et al.
2010/0287599 A1 11/2010 He et al.
2010/0311402 A1 12/2010 Srinivasan et al.
2010/0318652 A1 12/2010 Samba
2010/0322071 A1 12/2010 Avdanin et al.
2010/0325420 A1 12/2010 Kanekar
2011/0004917 A1 1/2011 Salsa et al.

(56) **References Cited**

U.S. PATENT DOCUMENTS

2011/0013569	A1	1/2011	Scherzer et al.
2011/0019574	A1	1/2011	Malomsoky et al.
2011/0071854	A1	3/2011	Medeiros et al.
2011/0081881	A1	4/2011	Baker et al.
2011/0082790	A1	4/2011	Baker et al.
2011/0110309	A1	5/2011	Bennett
2011/0126141	A1	5/2011	King et al.
2011/0145920	A1	6/2011	Mahaffey et al.
2011/0159818	A1	6/2011	Scherzer et al.
2011/0173678	A1	7/2011	Kaippallimalil et al.
2011/0177811	A1	7/2011	Heckman et al.
2011/0195700	A1	8/2011	Kukuchka et al.
2011/0238545	A1	9/2011	Fanaian et al.
2011/0241624	A1	10/2011	Park et al.
2011/0252430	A1	10/2011	Chapman et al.
2011/0264923	A1	10/2011	Kocher et al.
2011/0277019	A1	11/2011	Pritchard, Jr.
2012/0020296	A1	1/2012	Scherzer et al.
2012/0029718	A1	2/2012	Davis
2012/0108225	A1	5/2012	Luna et al.
2012/0144025	A1	6/2012	Melander et al.
2012/0155296	A1	6/2012	Kashanian
2012/0166364	A1	6/2012	Ahmad et al.
2012/0166604	A1	6/2012	Fortier et al.
2012/0195200	A1	8/2012	Regan
2012/0196644	A1	8/2012	Scherzer et al.
2012/0238287	A1	9/2012	Scherzer
2012/0330792	A1	12/2012	Kashanian
2013/0024914	A1	1/2013	Ahmed et al.
2013/0029653	A1	1/2013	Baker et al.
2013/0030960	A1	1/2013	Kashanian
2013/0058274	A1	3/2013	Scherzer et al.
2013/0065555	A1	3/2013	Baker et al.
2013/0072177	A1	3/2013	Ross et al.
2013/0084835	A1	4/2013	Scherzer et al.
2013/0095787	A1	4/2013	Kashanian
2013/0117140	A1	5/2013	Kashanian
2013/0144789	A1	6/2013	Aaltonen et al.
2013/0176908	A1	7/2013	Baniel et al.
2013/0326356	A9	12/2013	Zheng et al.
2014/0071895	A1	3/2014	Bane et al.
2014/0073291	A1	3/2014	Hildner et al.
2014/0198687	A1	7/2014	Raleigh
2014/0241342	A1	8/2014	Constantinof
2015/0039763	A1	2/2015	Chaudhary et al.
2015/0181628	A1	6/2015	Haverinen et al.
2017/0063695	A1	3/2017	Ferrell

FOREIGN PATENT DOCUMENTS

CN	1345154	A	4/2002
CN	1508734	A	6/2004
CN	1538730	A	10/2004
CN	1567818	A	1/2005
CN	101035308	A	3/2006
CN	1801829	A	7/2006
CN	1802839	A	7/2006
CN	1889777	A	7/2006
CN	101155343	B	9/2006
CN	1867024	A	11/2006
CN	1878160	A	12/2006
CN	1937511	A	3/2007
CN	101123553	A	9/2007
CN	101080055	A	11/2007
CN	101115248	A	1/2008
CN	101127988	A	2/2008
CN	101183958	A	5/2008
CN	101335666	A	12/2008
CN	101341764	A	1/2009
CN	101815275	A	8/2010
EP	1098490	A2	5/2001
EP	1289326	A1	3/2003
EP	1463238		9/2004
EP	1503548	A1	2/2005
EP	1545114	A1	6/2005
EP	1739518		1/2007
EP	1772988		4/2007
EP	1850575	A1	10/2007
EP	1887732	A1	2/2008
EP	1942698	A1	7/2008
EP	1978772		10/2008
EP	2007065	A1	12/2008
EP	2026514	A1	2/2009
EP	2466831	A1	6/2012
EP	2154602	B1	6/2017
JP	3148713	B2	3/2001
JP	2005339247	A	12/2005
JP	2006041989		2/2006
JP	2006155263	A	6/2006
JP	2006197137		7/2006
JP	2006344007	A	12/2006
JP	2007318354	A	12/2007
JP	2008301121	A	12/2008
JP	2009111919		5/2009
JP	2009212707	A	9/2009
JP	2009218773		9/2009
JP	2009232107	A	10/2009
KR	20040053858	A	6/2004
WO	1998058505		12/1998
WO	1999027723		6/1999
WO	1999065185		12/1999
WO	0208863		1/2002
WO	2002045315	A2	6/2002
WO	2002067616	A1	8/2002
WO	2002093877	A1	11/2002
WO	2003014891		2/2003
WO	2003017063	A2	2/2003
WO	2003017065	A2	2/2003
WO	2003058880		7/2003
WO	2004028070		4/2004
WO	2004064306	A2	7/2004
WO	2004077797		9/2004
WO	2004095753		11/2004
WO	2005008995		1/2005
WO	2005053335	A1	6/2005
WO	2005083934	A1	9/2005
WO	2006004467		1/2006
WO	2006004784	A1	1/2006
WO	2006012610	A2	2/2006
WO	2006050758		5/2006
WO	2006073837		7/2006
WO	2006077481		7/2006
WO	2006093961	A1	9/2006
WO	2006120558		11/2006
WO	2006130960		12/2006
WO	2007001833		1/2007
WO	2007014630		2/2007
WO	2007018363		2/2007
WO	2007053848		5/2007
WO	2007068288		6/2007
WO	2007069245		6/2007
WO	2007097786	A	8/2007
WO	2007107701		9/2007
WO	2007120310		10/2007
WO	2007124279		11/2007
WO	2007126352		11/2007
WO	2007129180	A2	11/2007
WO	2007133844	A	11/2007
WO	2008017837		2/2008
WO	2008051379		5/2008
WO	2008066419		6/2008
WO	2008080139		7/2008
WO	2008080430	A1	7/2008
WO	2008099802		8/2008
WO	2009008817	A1	1/2009
WO	2009091295	A1	7/2009
WO	2010088413		8/2010
WO	2010128391	A2	11/2010

(56) **References Cited**

FOREIGN PATENT DOCUMENTS

WO	2011002450	A1	1/2011
WO	2011149532	A1	12/2011

OTHER PUBLICATIONS

"ASA/PIX: Allow Split Tunneling for VPN Clients on the ASA Configuration Example," Document ID 70917, Jan. 10, 2008.
"Communication Concepts for Mobile Agent Systems," by Joachim Baumann et al.; Inst. Of Parallel and Distributed High-Performance Systems, Univ. of Stuttgart, Germany, pp. 123-135, 1997.
"End to End QoS Solution for Real-time Multimedia Application;" Computer Engineering and Applications, 2007, 43 (4): 155-159, by Tan Zu-guo, Wang Wen-juan; Information and Science School, Zhanjian Normal College, Zhan jiang, Guangdong 524048, China.
"Jentro Technologies launches Zenlet platform to accelerate location-based content delivery to mobile devices," The Mobile Internet, Boston, MA, Feb. 2008.
"The Construction of Intelligent Residential District in Use of Cable Television Network," Shandong Science, vol. 13, No. 2, Jun. 2000.
3rd Generation Partnership Project, "Technical Specification Group Core Network and Terminals; Access Network Discovery and Selection Function (ANDSF) Management Object (MO)," Release 9, Document No. 3GPP TS 24.312, V9.1.0, Mar. 2010.
3rd Generation Partnership Project, "Technical Specification Group Services and System Aspects; General Packet Radio Service (GPRS) Enhancements for Evolved Universal Terrestrial Radio Access Network (E-UTRAN) Access," Release 8, Document No. 3GPP TS 23.401, V8.4.0, Dec. 2008.
3rd Generation Partnership Project, "Technical Specification Group Services and System Aspects; Policy and Charging Control Architecture," Release 8, Document No. 3GPP TS 23.203, V8.4.0, Dec. 2008.
3rd Generation Partnership Project; "Technical Specification Group Services and System Aspects; IP Flow Mobility and seamless WLAN offlload; Stage 2," Release 10, Document No. 3GPP TS 23.261, V1.0.0, Mar. 2010.
Accuris Networks, "The Business Value of Mobile Data Offload—a White Paper", 2010.
Ahmed et al., "A Context-Aware Vertical Handover Decision Algorithm for Multimode Mobile Terminals and Its Performance," BenQ Mobile, Munich Germany; University of Klagenfurt, Klagenfurt, Austria; 2006.
Ahmed et al., "Multi Access Data Network Connectivity and IP Flow Mobility in Evolved Packet System (EPS)," 2010 IEEE.
Alonistioti et al., "Intelligent Architectures Enabling Flexible Service Provision and Adaptability," 2002.
Amazon Technologies, Inc., "Kindle™ User's Guide," 3rd Edition, Copyright 2004-2009.
Android Cupcake excerpts, The Android Open Source Project, Feb. 10, 2009.
Anton, B. et al., "Best Current Practices for Wireless Internet Service Provider (WISP) Roaming"; Release Date Feb. 2003, Version 1.0; Wi-Fi Alliance—Wireless ISP Roaming (WISPr).
Blackberry Mobile Data System, version 4.1, Technical Overview, 2006.
Chandrasekhar et al., "Femtocell Networks: A Survey," Jun. 28, 2008.
Chaouchi et al., "Policy Based Networking in the Integration Effort of 4G Networks and Services," 2004 IEEE.
Cisco Systems, Inc., "Cisco Mobile Exchange (CMX) Solution Guide: Chapter 2—Overview of GSM, GPRS, and UMTS," Nov. 4, 2008.
Client Guide for Symantec Endpoint Protection and Symantec Network Access Control, 2007.
Dikaiakos et al., "A Distributed Middleware Infrastructure for Personalized Services," Nov. 24, 2003.
Dixon et al., Triple Play Digital Services: Comcast and Verizon (Digital Phone, Television, and Internet), Aug. 2007.
Ehnert, "Small application to monitor IP trafic on a Blackberry—1.01.03", Mar. 27, 2008; http://www.ehnert.net/MiniMoni/.
European Commission, "Data Roaming Tariffs—Transparency Measures," obtained from EUROPA—Europe's Information Society Thematic Portal website, Jun. 24, 2011: "http://ec.europa.eu/information_society/activities/roaming/data/measures/index_en.htm."
Farooq et al., "An IEEE 802.16 WiMax Module for the NS-3 Simulator," Mar. 2-6, 2009.
Fujitsu, "Server Push Technology Survey and Bidirectional Communication in HTTP Browser," Jan. 9, 2008 (JP).
Ian et al., "Information Collection Services for Qos-Aware Mobile Applications," 2005.
Hartmann et al., "Agent-Based Banking Transactions & Information Retrieval—What About Performance Issues?" 1999.
Hewlett-Packard Development Company, LP, "IP Multimedia Services Charging," white paper, Jan. 2006.
Hossain et al., "Gain-Based Selection of Ambient Media Services in Pervasive Environments," Mobile Networks and Applications. Oct. 3, 2008.
Jing et al., "Client-Server Computing in Mobile Environments," GTE Labs. Inc., Purdue University, ACM Computing Surveys, vol. 31, No. 2, Jun. 1999.
Kasper et al., "Subscriber Authentication in mobile cellular Networks with virtual software SIM Credentials using Trusted Computing," Fraunhofer-Institute for Secure Information Technology SIT, Darmstadt, Germany; ICACT 2008.
Kassar et al., "An overview of vertical handover decision strategies in heterogeneous wireless networks," ScienceDirect, University Pierre & Marie Curie, Paris, France, Jun. 5, 2007.
Kim, "Free wireless a high-wire act; MetroFi needs to draw enough ads to make service add profits," San Francisco Chronicle, Aug. 21, 2006.
Knight et al., "Layer 2 and 3 Virtual Private Networks: Taxonomy, Technology, and Standarization Efforts," IEEE Communications Magazine, Jun. 2004.
Koutsopoulou et al., "Charging, Accounting and Billing Management Schemes in Mobile Telecommunication Networks and the Internet," IEEE Communications Surveys & Tutorials, First Quarter 2004, vol. 6, No. 1.
Koutsopoulou et al., "Middleware Platform for the Support of Charging Reconfiguration Actions," 2005.
Kuntze et al., "Trustworthy content push," Fraunhofer-Institute for Secure Information Technology SIT; Germany; WCNC 2007 proceedings, IEEE.
Kyriakakos et al., "Ubiquitous Service Provision in Next Generation Mobile Networks," Proceedings of the 13th IST Mobile and Wireless Communications Summit, Lyon, France, Jun. 2004.
Li, Yu, "Dedicated E-Reading Device: The State of the Art and the Challenges," Scroll, vol. 1, No. 1, 2008.
Loopt User Guide, metroPCS, Jul. 17, 2008.
Muntermann et al., "Potentiale und Sicherheitsanforderungen mobiler Finanzinformationsdienste und deren Systeminfrastrukturen," Chair of Mobile Commerce & Multilateral Security, Goethe Univ. Frankfurt, 2004.
NetLimiter Lite 4.0.19.0; http://www.heise.de/download/netlimiter-lite-3617703.html from vol. 14/2007.
Nilsson et al., "A Novel MAC Scheme for Solving the QoS Parameter Adjustment Problem in IEEE802.11e EDCA," Feb. 2006.
Nuzman et al., "A compund model for TCP connection arrivals for LAN and WAN applications," Oct. 22, 2002.
Open Mobile Alliance (OMA), Push Architecture, Candidate Version 2.2; Oct. 2, 2007; OMA-AD-Push-V2_2-20071002-C.
Oppliger, Rolf, "Internet Security: Firewalls and Bey," Communications of the ACM, May 1997, vol. 40. No. 5.
Quintana, David, "Mobile Multitasking," Apr. 14, 2010.
Rao et al., "Evolution of Mobile Location-Based Services," Communication of the ACM, Dec. 2003.
Richtel, "Cellphone consumerism; If even a debit card is too slow, now you have a new way to act on impulse: [National Edition]," National Post, Canada, Oct. 2, 2007.
Rivadeneyra et al., "A communication architecture to access data services through GSM," San Sebastian, Spain, 1998.

(56) **References Cited**

OTHER PUBLICATIONS

Roy et al., "Energy Management in Mobile Devices with the Cinder Operating System", Stanford University, MIT CSAIL, Jun. 3, 2010.
Ruckus Wireless—White Paper; "Smarter Wi-Fi for Mobile Operator Infrastructures" 2010.
Sabat, "The evolving mobile wireless value chain and market structure," Nov. 2002.
Sadeh et al., "Understanding and Capturing People's Privacy Policies in a Mobile Social Networking Application," ISR School of Computer Science, Carnegie Mellon University, 2007.
Schiller et al., "Location-Based Services," The Morgan Kaufmann Series in Data Management Systems, 2004.
Steglich, Stephan, "I-Centric User Interaction," Nov. 21, 2003.
Sun et al., "Towards Connectivity Management Adaptability: Context Awareness in Policy Representation and End-to-end Evaluation Algorithm," Dept. of Electrical and Information Engineering, Univ. of Oulu, Finland, 2004.
Thurston, Richard, "WISPr 2.0 Boosts Roaming Between 3G and Wi-Fi"; Jun. 23, 2010; Web page from zdnet.com; Zdnet.com/wispr-2-0-boosts-roaming-between-3g-and-wi-fi-3040089325/.
Van Eijk, et al., "GigaMobile, Agent Technology for Designing Personalized Mobile Service Brokerage," Jul. 1, 2002.
VerizonWireless.com news, "Verizon Wireless Adds to Portfolio of Cosumer-Friendly Tools With Introduction of Usage Controls, Usage Controls and Chaperone 2.0 Offer Parents Full Family Security Solution," Aug. 18, 2008.
Windows7 Power Management, published Apr. 2009.
Wireless Broadband Alliance, "WISPr 2.0, Apr. 8, 2010"; Doc. Ref. No. WBA/RM/WISPr, Version 01.00.
Zhu et al., "A Survey of Quality of Service in IEEE 802.11 Networks," IEEE Wireless Communications, Aug. 2004.

* cited by examiner

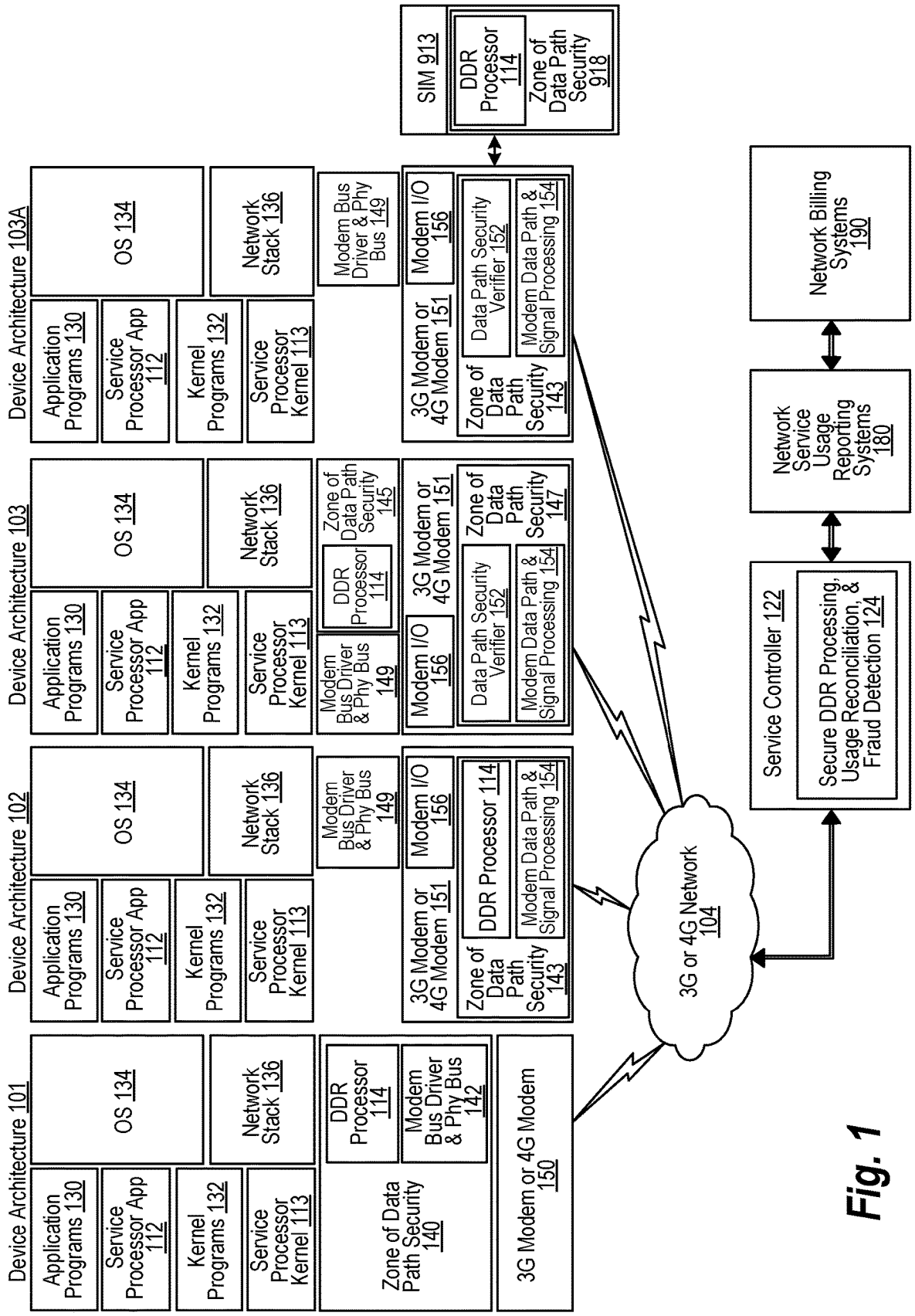
Device Architecture 101
Application Programs 130
Service Processor App 112
Kernel Programs 132
Service Processor Kernel 113
OS 134
Network Stack 136
DDR Processor 114
Modem Bus Driver & Phy Bus 142
Zone of Data Path Security 140
3G Modem or 4G Modem 150
Device Architecture 102
Application Programs 130
Service Processor App 112
Kernel Programs 132
Service Processor Kernel 113
OS 134
Network Stack 136
Modem Bus Driver & Phy Bus 149
Modem I/O 156
DDR Processor 114
Modem Data Path & Signal Processing 154
Zone of Data Path Security 143
3G Modem or 4G Modem 151
Device Architecture 103
Application Programs 130
Service Processor App 112
Kernel Programs 132
Service Processor Kernel 113
OS 134
Network Stack 136
Modem Bus Driver & Phy Bus 149
DDR Processor 114
Zone of Data Path Security 145
Modem I/O 156
Data Path Security Verifier 152
Modem Data Path & Signal Processing 154
Zone of Data Path Security 147
3G Modem or 4G Modem 151
Device Architecture 103A
Application Programs 130
Service Processor App 112
Kernel Programs 132
Service Processor Kernel 113
OS 134
Network Stack 136
Modem Bus Driver & Phy Bus 149
Modem I/O 156
Data Path Security Verifier 152
Modem Data Path & Signal Processing 154
Zone of Data Path Security 143
3G Modem or 4G Modem 151
SIM 913
DDR Processor 114
Zone of Data Path Security 918
3G or 4G Network 104
Service Controller 122
Secure DDR Processing, Usage Reconciliation, & Fraud Detection 124
Network Service Usage Reporting Systems 180
Network Billing Systems 190

Fig. 1

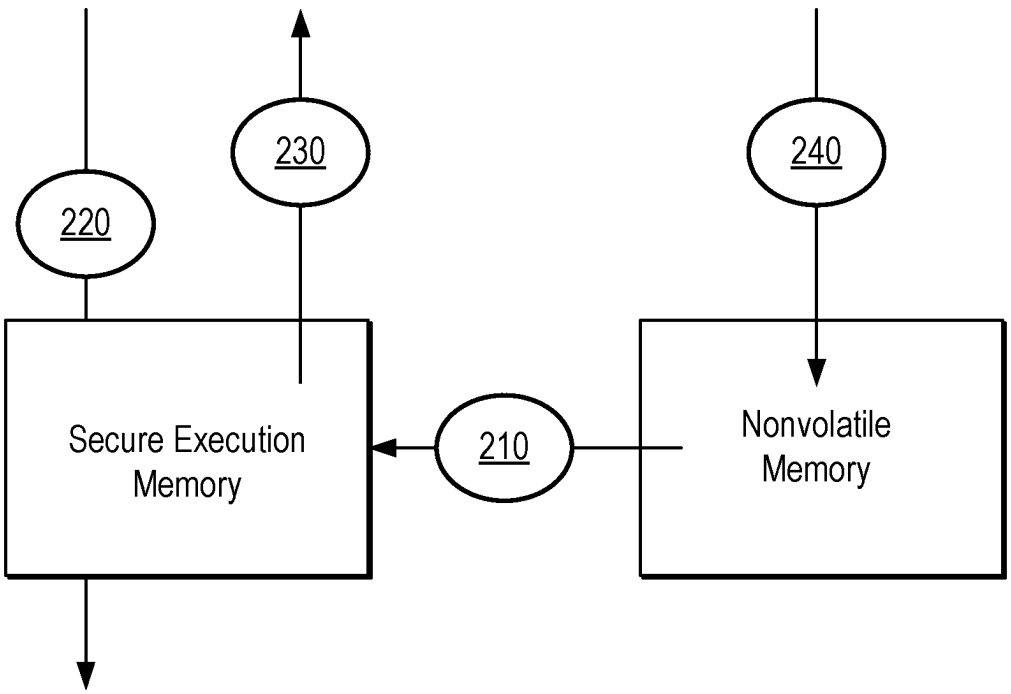
230
240
220
Secure Execution Memory
210
Nonvolatile Memory

Fig. 2

Fig. 3

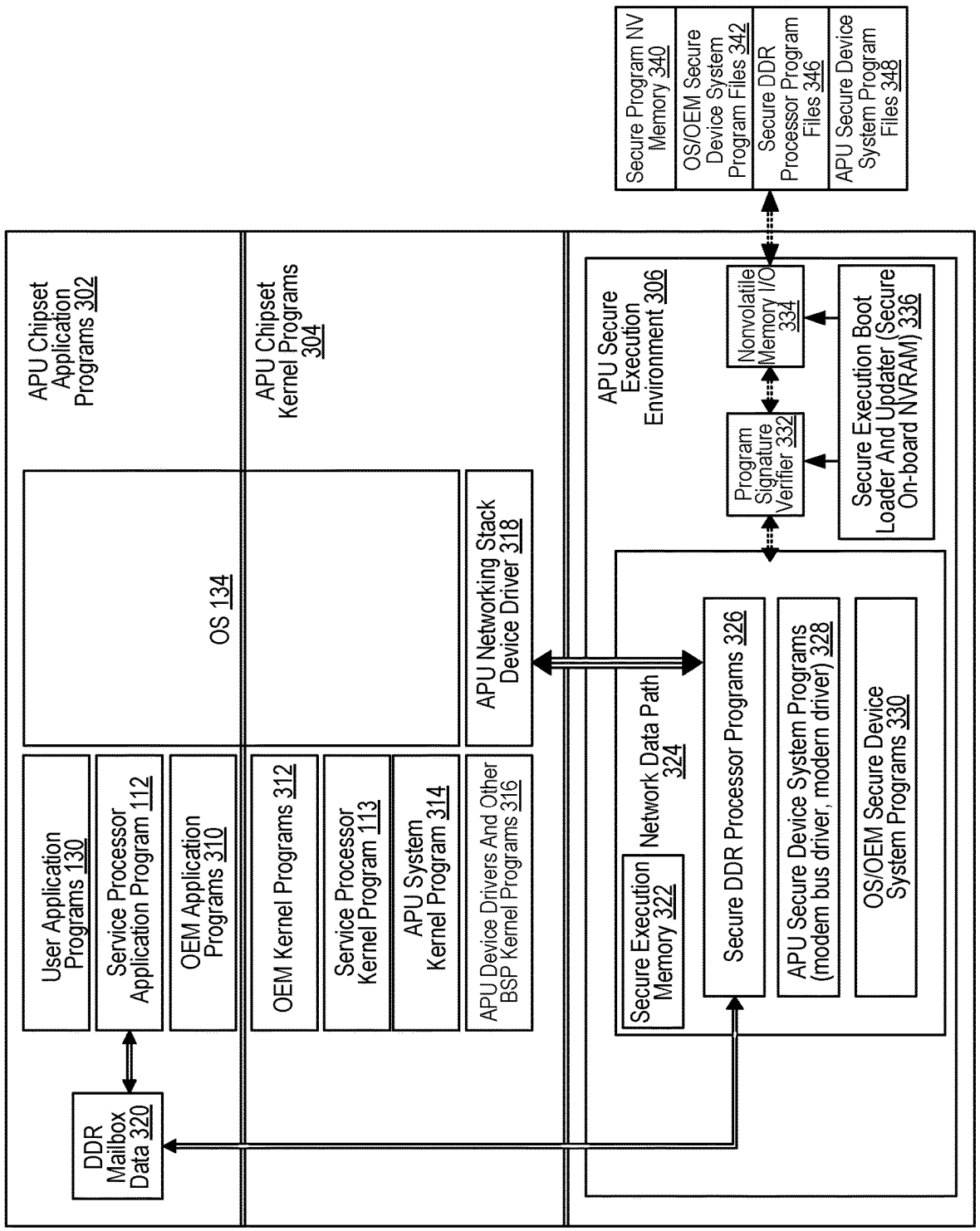
APU Chipset Application Programs 302
APU Chipset Kernel Programs 304
OS 134
APU Networking Stack Device Driver 318
User Application Programs 130
Service Processor Application Program 112
OEM Application Programs 310
OEM Kernel Programs 312
Service Processor Kernel Program 113
APU System Kernel Program 314
APU Device Drivers And Other BSP Kernel Programs 316
DDR Mailbox Data 320
APU Secure Execution Environment 306
Secure Execution Memory 322
Network Data Path 324
Secure DDR Processor Programs 326
APU Secure Device System Programs (modem bus driver, modern driver) 328
OS/OEM Secure Device System Programs 330
Program Signature Verifier 332
Nonvolatile Memory I/O 334
Secure Execution Boot Loader And Updater (Secure On-board NVRAM) 336
Secure Program NV Memory 340
OS/OEM Secure Device System Program Files 342
Secure DDR Processor Program Files 346
APU Secure Device System Program Files 348

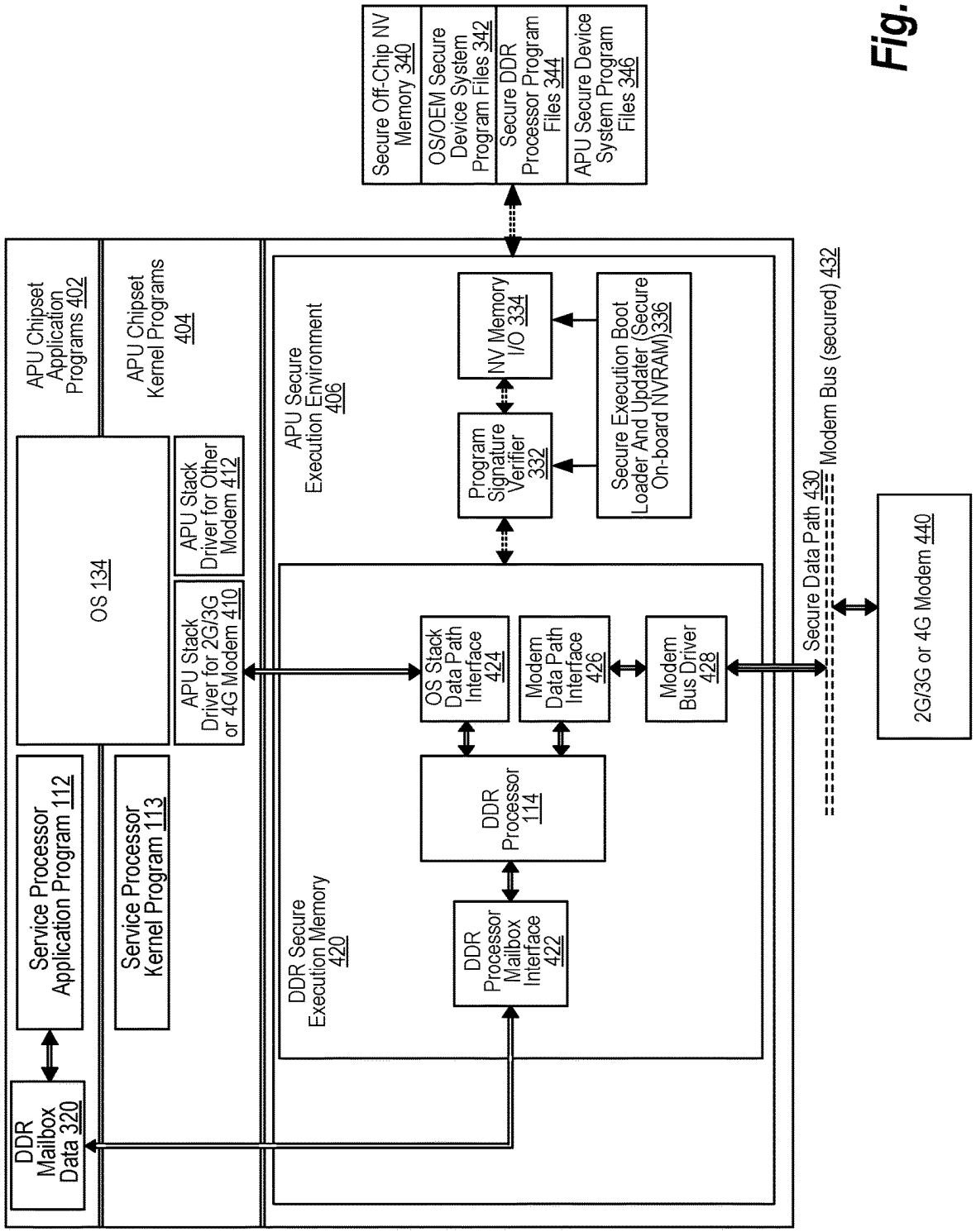
Secure Off-Chip NV Memory 340
OS/OEM Secure Device System Program Files 342
Secure DDR Processor Program Files 344
APU Secure Device System Program Files 346
APU Chipset Application Programs 402
APU Chipset Kernel Programs 404
APU Secure Execution Environment 406
NV Memory I/O 334
Program Signature Verifier 332
Secure Execution Boot Loader And Updater (Secure On-board NVRAM)336
OS 134
APU Stack Driver for Other Modem 412
APU Stack Driver for 2G/3G or 4G Modem 410
OS Stack Data Path Interface 424
Modem Data Path Interface 426
Modem Bus Driver 428
Secure Data Path 430
Modem Bus (secured) 432
2G/3G or 4G Modem 440
Service Processor Application Program 112
Service Processor Kernel Program 113
DDR Processor 114
DDR Secure Execution Memory 420
DDR Processor Mailbox Interface 422
DDR Mailbox Data 320

Fig. 4

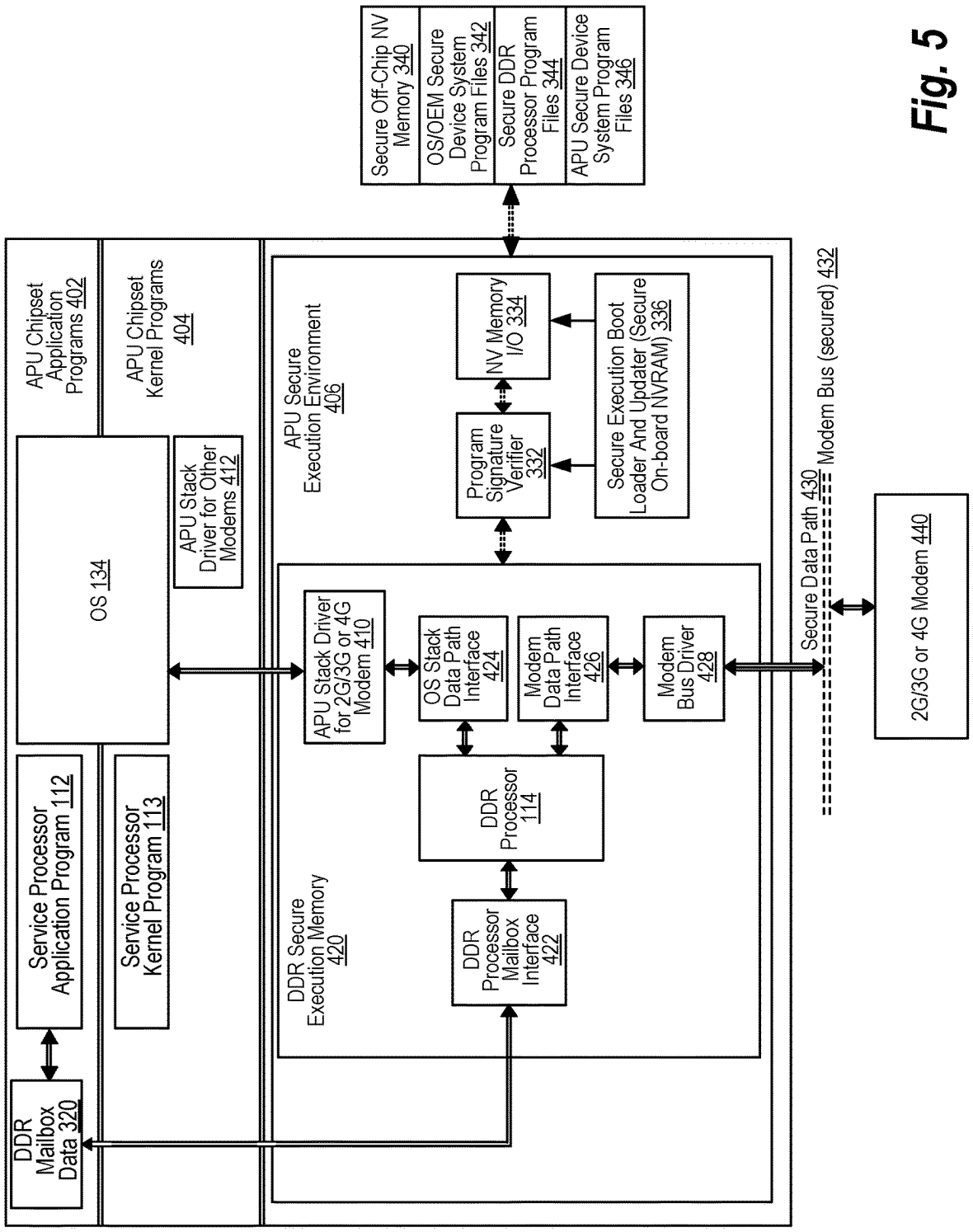
Secure Off-Chip NV Memory 340
OS/OEM Secure Device System Program Files 342
Secure DDR Processor Program Files 344
APU Secure Device System Program Files 346
APU Chipset Application Programs 402
APU Chipset Kernel Programs 404
APU Secure Execution Environment 406
NV Memory I/O 334
Program Signature Verifier 332
Secure Execution Boot Loader And Updater (Secure On-board NVRAM) 336
OS 134
APU Stack Driver for Other Modems 412
APU Stack Driver for 2G/3G or 4G Modem 410
OS Stack Data Path Interface 424
Modem Data Path Interface 426
Modem Bus Driver 428
Secure Data Path 430
Modem Bus (secured) 432
2G/3G or 4G Modem 440
Service Processor Application Program 112
Service Processor Kernel Program 113
DDR Processor 114
DDR Secure Execution Memory 420
DDR Processor Mailbox Interface 422
DDR Mailbox Data 320

Fig. 5

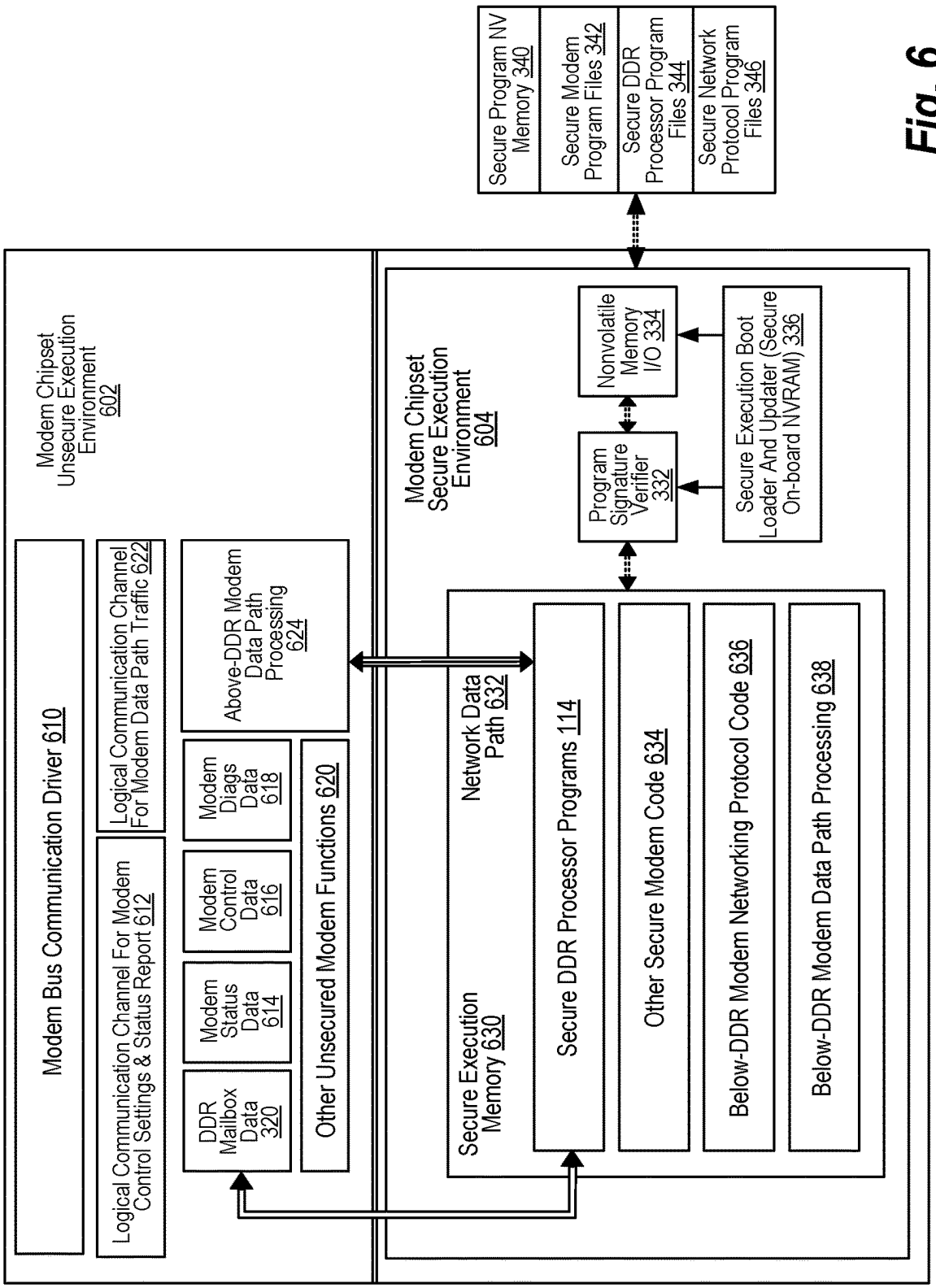
Modem Chipset Unsecure Execution Environment 602
Modem Bus Communication Driver 610
Logical Communication Channel For Modem Control Settings & Status Report 612
Logical Communication Channel For Modem Data Path Traffic 622
DDR Mailbox Data 320
Modem Status Data 614
Modem Control Data 616
Modem Diags Data 618
Above-DDR Modem Data Path Processing 624
Other Unsecured Modem Functions 620
Modem Chipset Secure Execution Environment 604
Secure Execution Memory 630
Network Data Path 632
Secure DDR Processor Programs 114
Other Secure Modem Code 634
Below-DDR Modem Networking Protocol Code 636
Below-DDR Modem Data Path Processing 638
Program Signature Verifier 332
Nonvolatile Memory I/O 334
Secure Execution Boot Loader And Updater (Secure On-board NVRAM) 336
Secure Program NV Memory 340
Secure Modem Program Files 342
Secure DDR Processor Program Files 344
Secure Network Protocol Program Files 346

Fig. 6

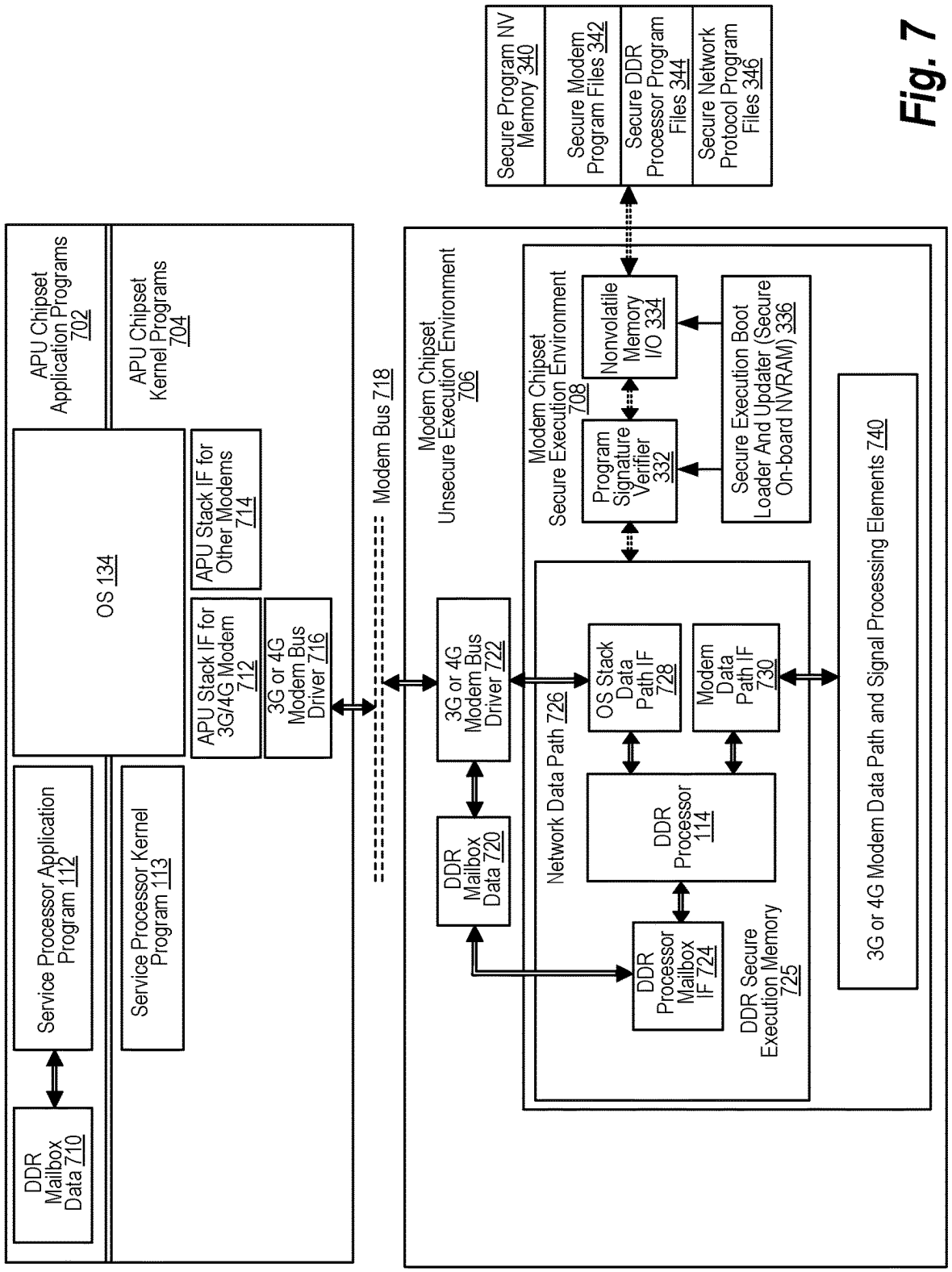
APU Chipset Application Programs 702
APU Chipset Kernel Programs 704
OS 134
APU Stack IF for Other Modems 714
APU Stack IF for 3G/4G Modem 712
3G or 4G Modem Bus Driver 716
Service Processor Application Program 112
Service Processor Kernel Program 113
DDR Mailbox Data 710
Modem Bus 718
Modem Chipset Unsecure Execution Environment 706
3G or 4G Modem Bus Driver 722
DDR Mailbox Data 720
Modem Chipset Secure Execution Environment 708
Nonvolatile Memory I/O 334
Program Signature Verifier 332
Secure Execution Boot Loader And Updater (Secure On-board NVRAM) 336
Network Data Path 726
OS Stack Data Path IF 728
Modem Data Path IF 730
DDR Processor 114
DDR Processor Mailbox IF 724
DDR Secure Execution Memory 725
3G or 4G Modem Data Path and Signal Processing Elements 740
Secure Program NV Memory 340
Secure Modem Program Files 342
Secure DDR Processor Program Files 344
Secure Network Protocol Program Files 346

Fig. 7

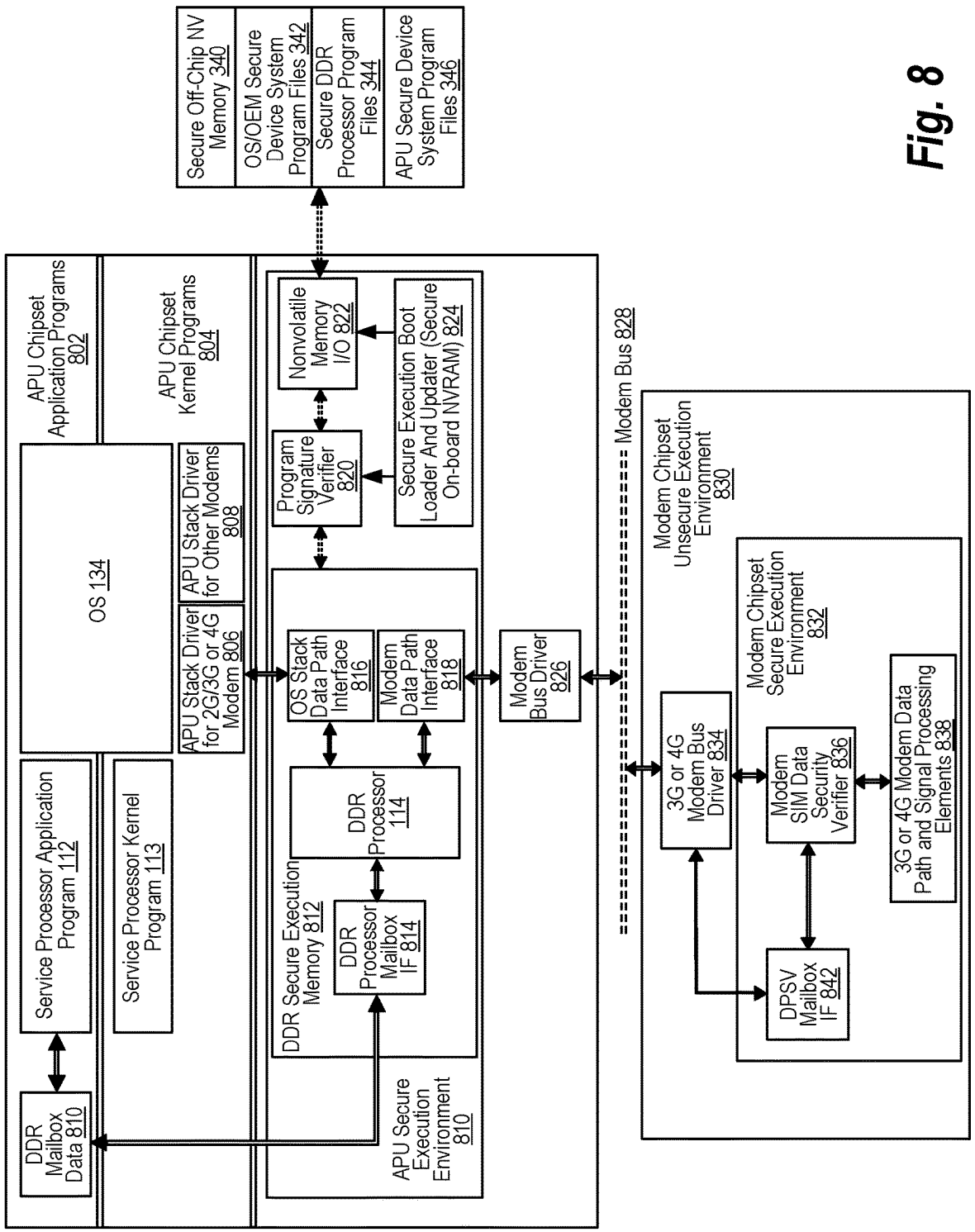
Secure Off-Chip NV Memory 340
OS/OEM Secure Device System Program Files 342
Secure DDR Processor Program Files 344
APU Secure Device System Program Files 346
APU Chipset Application Programs 802
APU Chipset Kernel Programs 804
OS 134
APU Stack Driver for Other Modems 808
APU Stack Driver for 2G/3G or 4G Modem 806
Service Processor Application Program 112
Service Processor Kernel Program 113
DDR Mailbox Data 810
Nonvolatile Memory I/O 822
Program Signature Verifier 820
Secure Execution Boot Loader And Updater (Secure On-board NVRAM) 824
OS Stack Data Path Interface 816
Modem Data Path Interface 818
DDR Processor 114
DDR Processor Mailbox IF 814
DDR Secure Execution Memory 812
APU Secure Execution Environment 810
Modem Bus Driver 826
Modem Bus 828
Modem Chipset Unsecure Execution Environment 830
Modem Chipset Secure Execution Environment 832
3G or 4G Modem Bus Driver 834
Modem SIM Data Security Verifier 836
3G or 4G Modem Data Path and Signal Processing Elements 838
DPSV Mailbox IF 842

Fig. 8

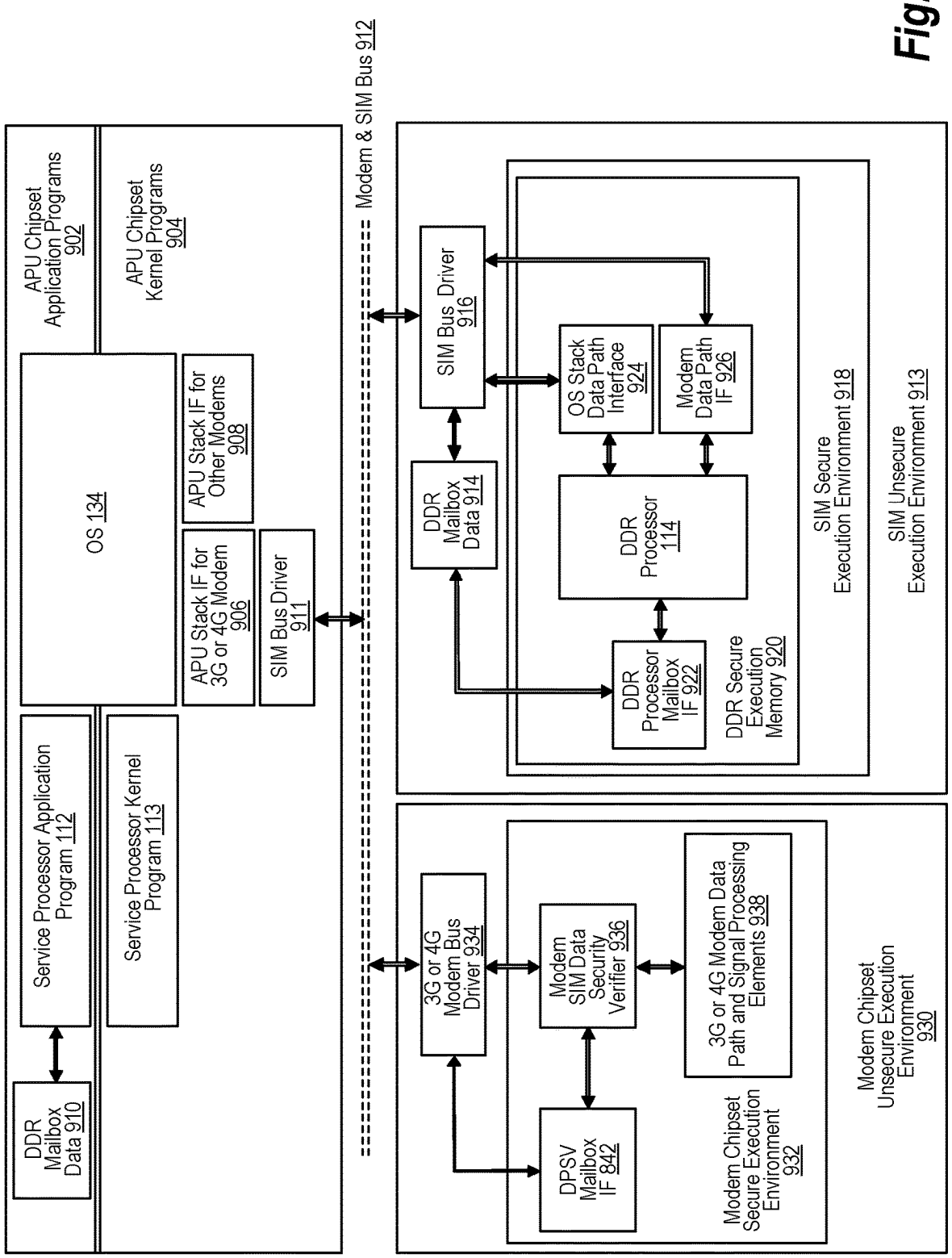
APU Chipset Application Programs 902
APU Chipset Kernel Programs 904
OS 134
APU Stack IF for Other Modems 908
APU Stack IF for 3G or 4G Modem 906
SIM Bus Driver 911
Service Processor Application Program 112
Service Processor Kernel Program 113
DDR Mailbox Data 910
Modem & SIM Bus 912
SIM Bus Driver 916
DDR Mailbox Data 914
OS Stack Data Path Interface 924
Modem Data Path IF 926
DDR Processor 114
DDR Processor Mailbox IF 922
DDR Secure Execution Memory 920
SIM Secure Execution Environment 918
SIM Unsecure Execution Environment 913
3G or 4G Modem Bus Driver 934
Modem SIM Data Security Verifier 936
3G or 4G Modem Data Path and Signal Processing Elements 938
DPSV Mailbox IF 842
Modem Chipset Secure Execution Environment 932
Modem Chipset Unsecure Execution Environment 930

Fig. 9

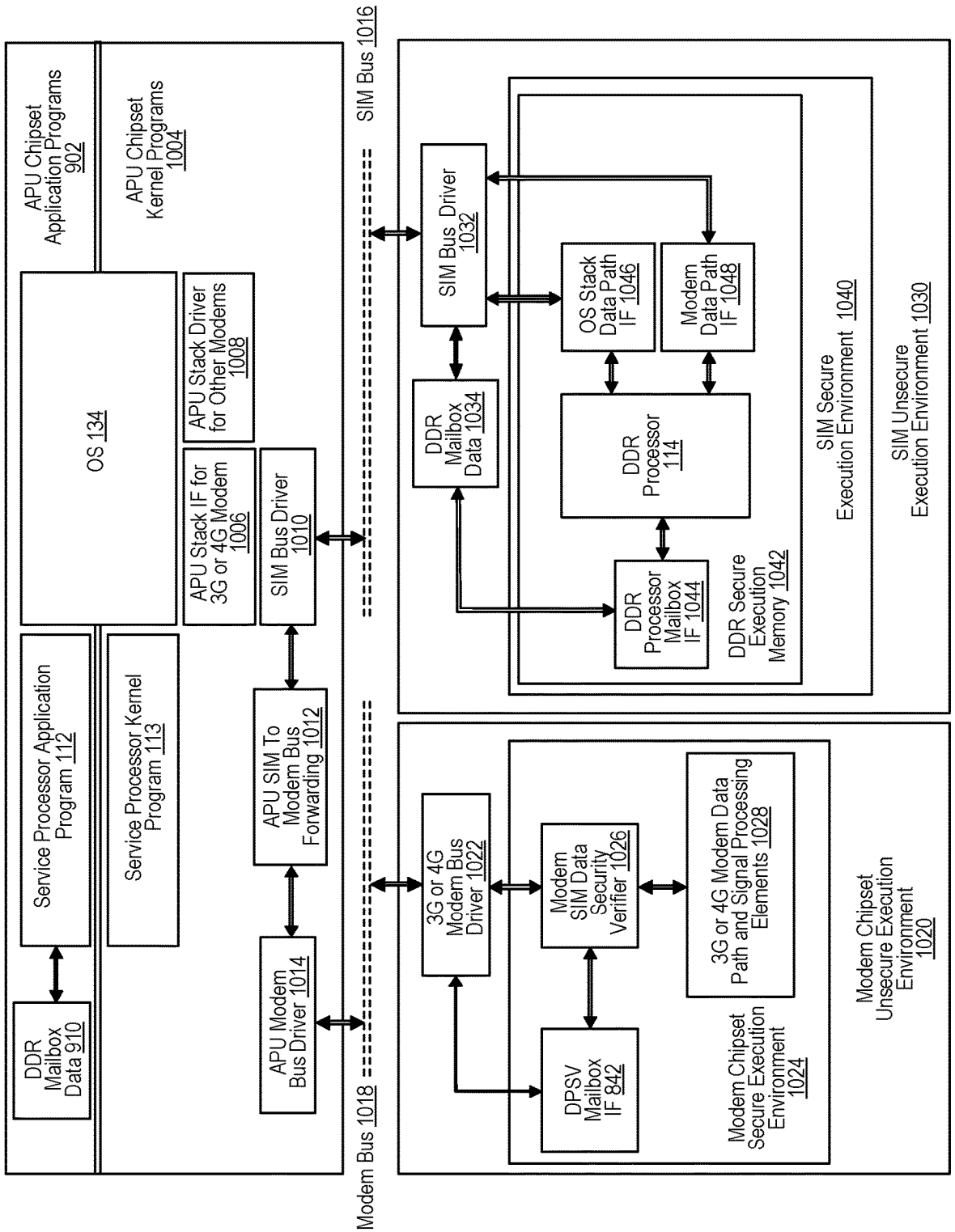
APU Chipset Application Programs 902
APU Chipset Kernel Programs 1004
OS 134
APU Stack Driver for Other Modems 1008
APU Stack IF for 3G or 4G Modem 1006
SIM Bus Driver 1010
Service Processor Application Program 112
Service Processor Kernel Program 113
DDR Mailbox Data 910
APU SIM To Modem Bus Forwarding 1012
APU Modem Bus Driver 1014
Modem Bus 1018
SIM Bus 1016
SIM Bus Driver 1032
DDR Mailbox Data 1034
OS Stack Data Path IF 1046
Modem Data Path IF 1048
DDR Processor 114
DDR Processor Mailbox IF 1044
DDR Secure Execution Memory 1042
SIM Secure Execution Environment 1040
SIM Unsecure Execution Environment 1030
3G or 4G Modem Bus Driver 1022
Modem SIM Data Security Verifier 1026
3G or 4G Modem Data Path and Signal Processing Elements 1028
DPSV Mailbox IF 842
Modem Chipset Secure Execution Environment 1024
Modem Chipset Unsecure Execution Environment 1020

Fig. 10

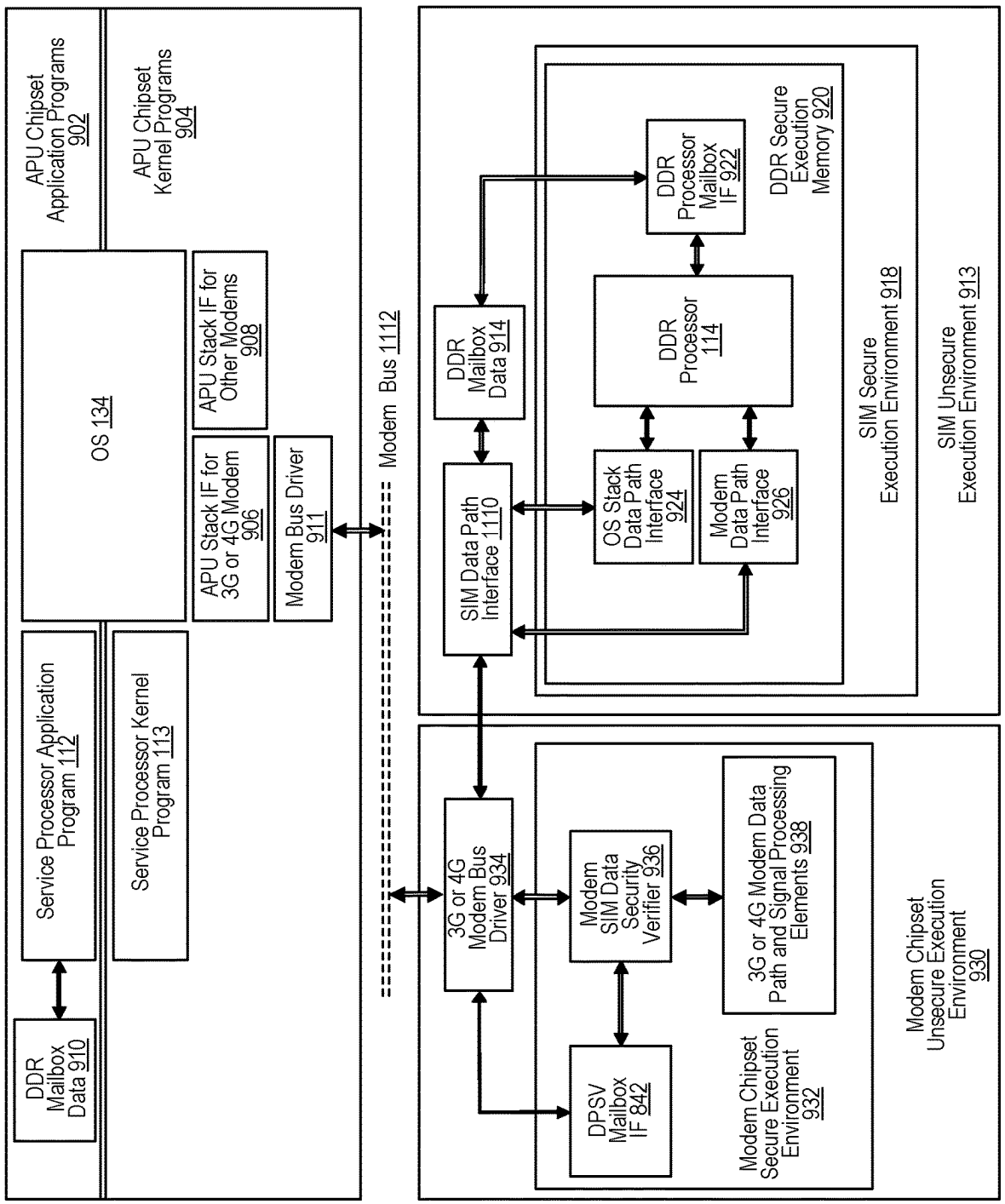
APU Chipset Application Programs 902
APU Chipset Kernel Programs 904
OS 134
APU Stack IF for Other Modems 908
APU Stack IF for 3G or 4G Modem 906
Modem Bus Driver 911
Service Processor Application Program 112
Service Processor Kernel Program 113
DDR Mailbox Data 910
Modem Bus 1112
DDR Mailbox Data 914
SIM Data Path Interface 1110
DDR Processor Mailbox IF 922
DDR Processor 114
OS Stack Data Path Interface 924
Modem Data Path Interface 926
DDR Secure Execution Memory 920
SIM Secure Execution Environment 918
SIM Unsecure Execution Environment 913
3G or 4G Modem Bus Driver 934
Modem SIM Data Security Verifier 936
3G or 4G Modem Data Path and Signal Processing Elements 938
DPSV Mailbox IF 842
Modem Chipset Secure Execution Environment 932
Modem Chipset Unsecure Execution Environment 930

Fig. 11

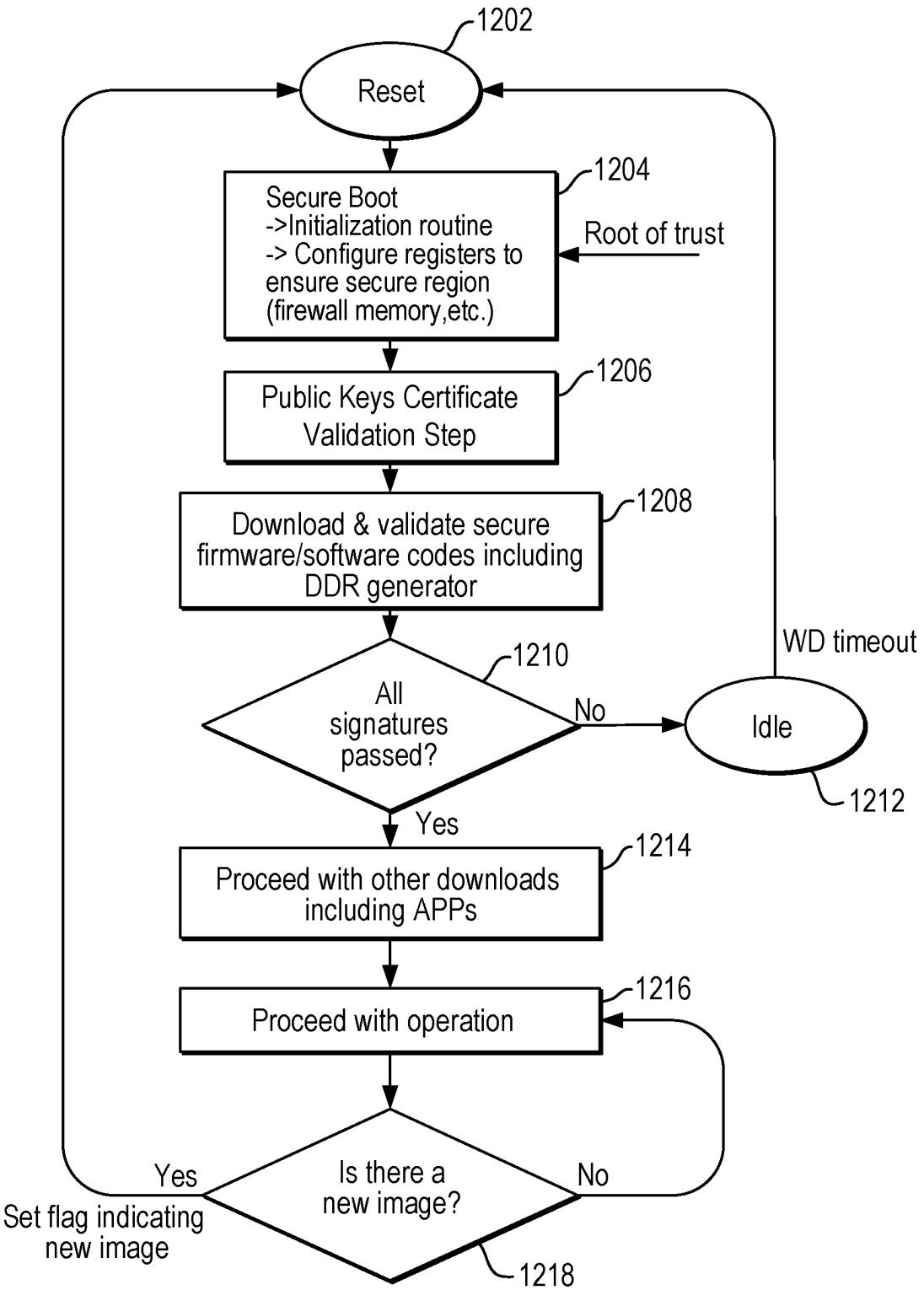
1202
Reset
1204
Secure Boot
->Initialization routine
-> Configure registers to ensure secure region (firewall memory,etc.)
Root of trust
1206
Public Keys Certificate Validation Step
1208
Download & validate secure firmware/software codes including DDR generator
1210
All signatures passed?
No
Idle
1212
WD timeout
Yes
1214
Proceed with other downloads including APPs
1216
Proceed with operation
Is there a new image?
Yes
Set flag indicating new image
No
1218

Fig. 12

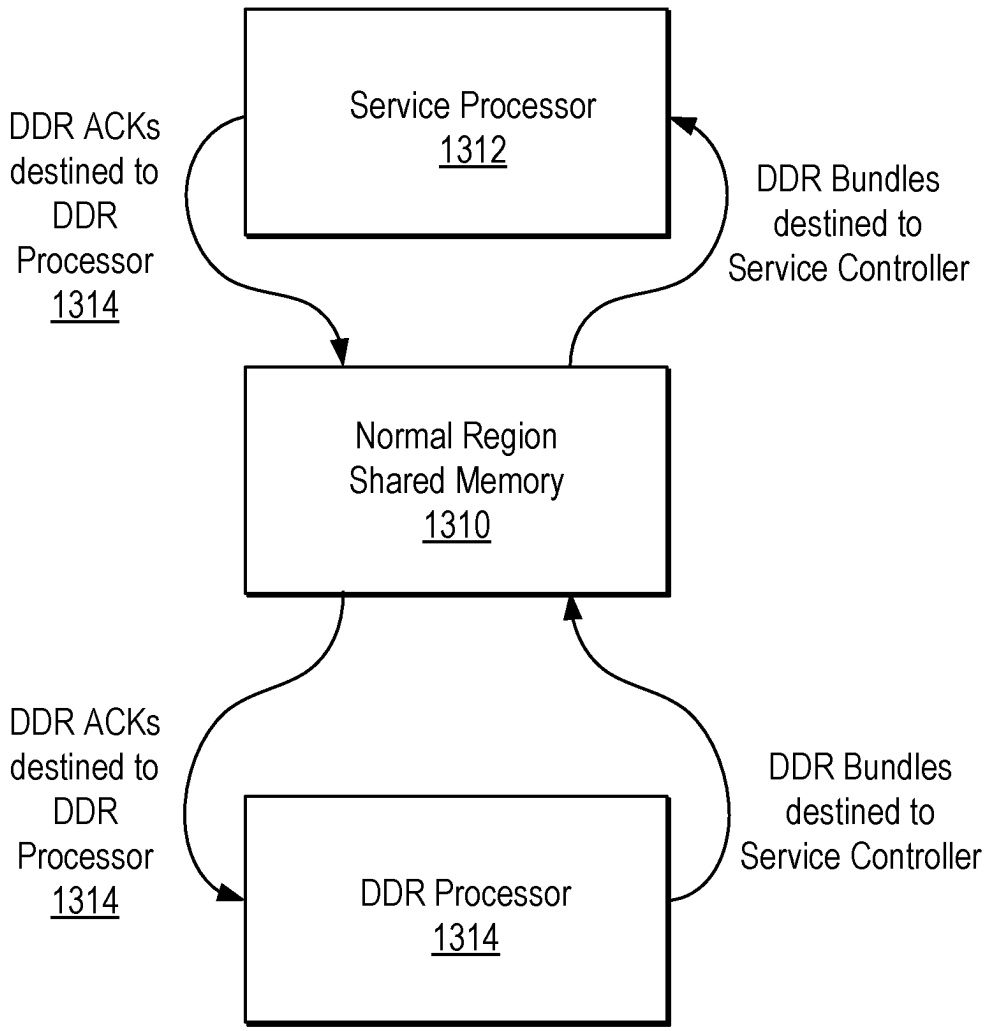
Service Processor
1312
DDR ACKs destined to DDR Processor 1314
DDR Bundles destined to Service Controller
Normal Region Shared Memory
1310
DDR ACKs destined to DDR Processor 1314
DDR Bundles destined to Service Controller
DDR Processor
1314

Fig. 13

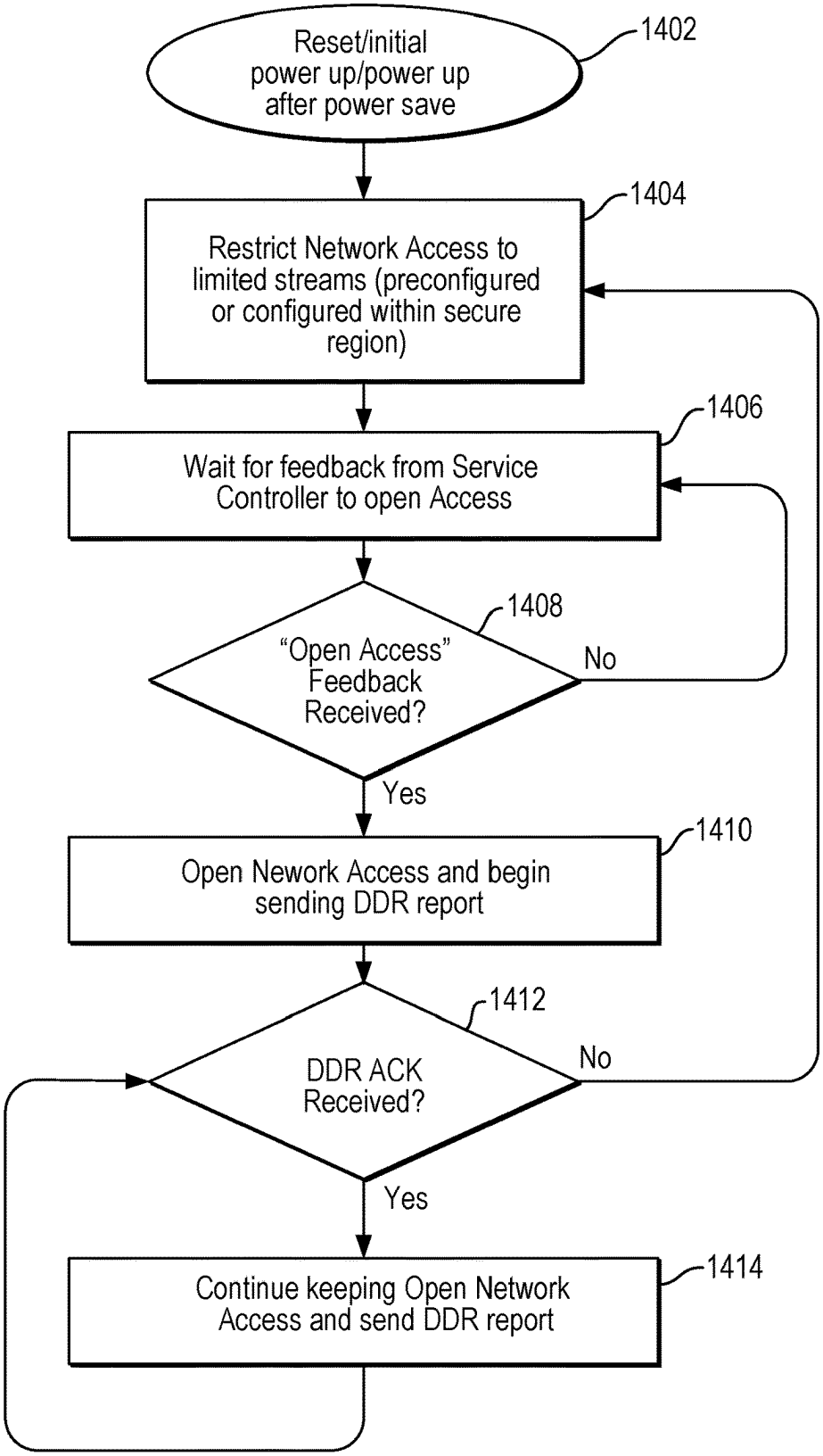
Reset/initial power up/power up after power save
1402
Restrict Network Access to limited streams (preconfigured or configured within secure region)
1404
Wait for feedback from Service Controller to open Access
1406
"Open Access" Feedback Received?
1408
No
Yes
Open Nework Access and begin sending DDR report
1410
DDR ACK Received?
1412
No
Yes
Continue keeping Open Network Access and send DDR report
1414

Fig. 14

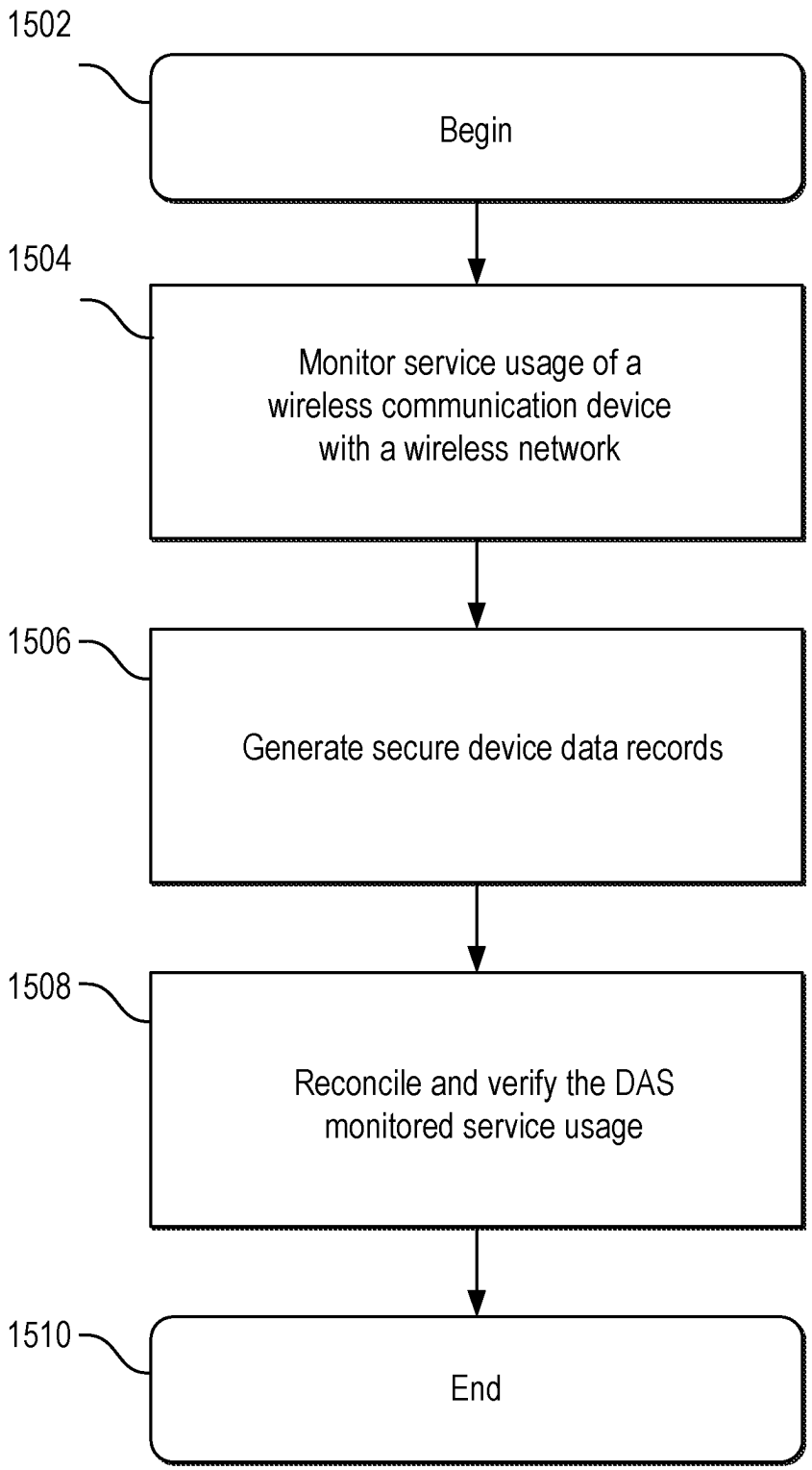
1502
Begin
1504
Monitor service usage of a wireless communication device with a wireless network
1506
Generate secure device data records
1508
Reconcile and verify the DAS monitored service usage
1510
End

Fig. 15

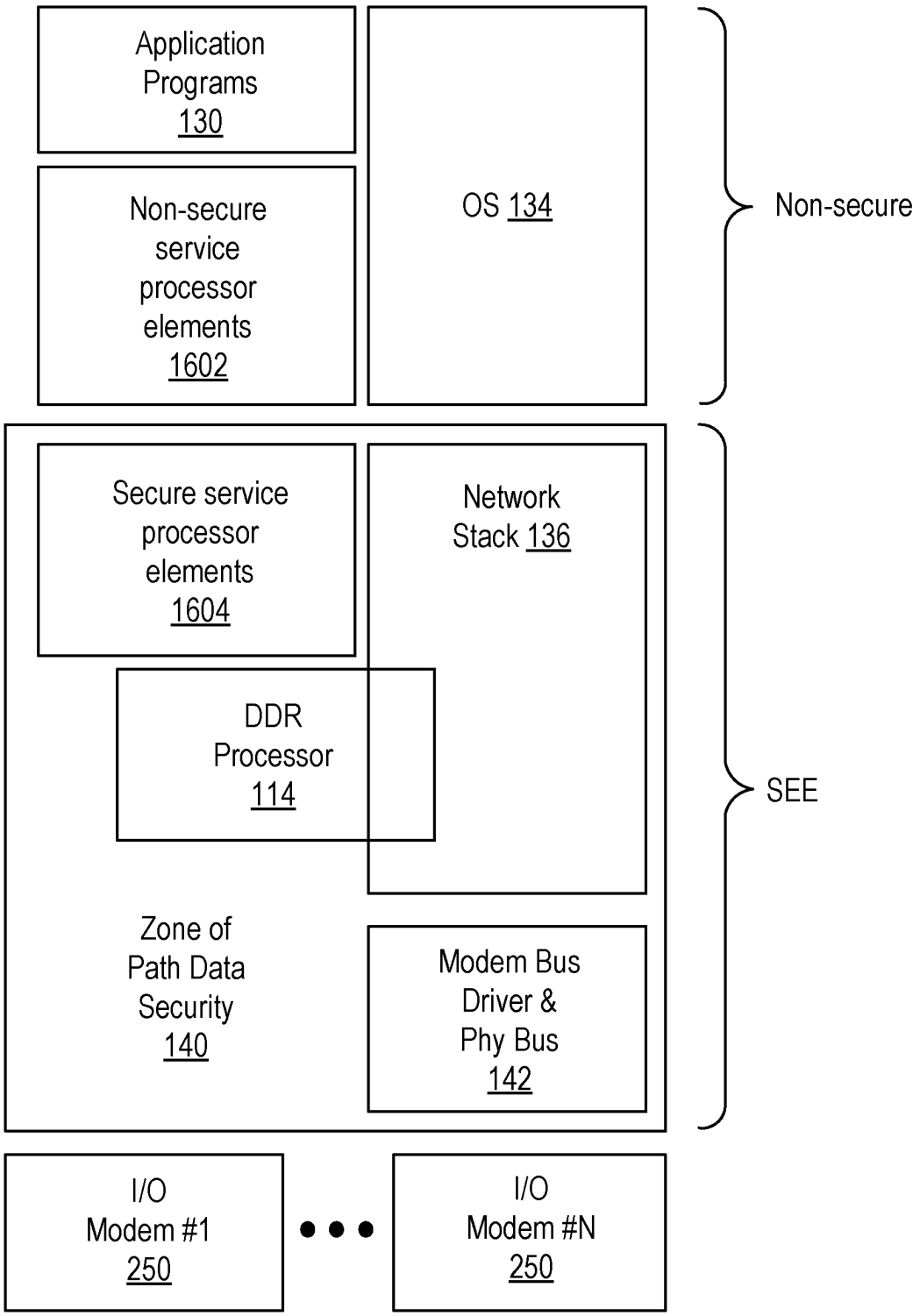
Application Programs 130
Non-secure service processor elements 1602
OS 134
Non-secure
Secure service processor elements 1604
Network Stack 136
DDR Processor 114
SEE
Zone of Path Data Security 140
Modem Bus Driver & Phy Bus 142
I/O Modem #1 250
I/O Modem #N 250

Fig. 16

COMMUNICATIONS DEVICE WITH SECURE DATA PATH PROCESSING AGENTS

INCORPORATION BY REFERENCE

This document incorporates by reference for all purposes the following non-provisional U.S. patent applications: application Ser. No. 12/380,778 filed Mar. 2, 2009, entitled VERIFIABLE DEVICE ASSISTED SERVICE USAGE BILLING WITH INTEGRATED ACCOUNTING, MEDIATION ACCOUNTING, AND MULTI-ACCOUNT, now U.S. Pat. No. 8,321,526 (issued Nov. 27, 2012); application Ser. No. 12/380,780, filed Mar. 2, 2009, entitled AUTOMATED DEVICE PROVISIONING AND ACTIVATION, now U.S. Pat. No. 8,839,388 (issued Sep. 16, 2014); application Ser. No. 12/695,019, filed Jan. 27, 2010, entitled DEVICE ASSISTED CDR CREATION, AGGREGATION, MEDIATION AND BILLING, now U.S. Pat. No. 8,275,830 (issued Sep. 25, 2012); application Ser. No. 12/695,020, filed Jan. 27, 2010, entitled ADAPTIVE AMBIENT SERVICES, now U.S. Pat. No. 8,406,748 (issued Mar. 26, 2013); application Ser. No. 12/694,445, filed Jan. 27, 2010, entitled SECURITY TECHNIQUES FOR DEVICE ASSISTED SERVICES, now U.S. Pat. No. 8,391,834 (issued Mar. 5, 2013); application Ser. No. 12/694,451, filed Jan. 27, 2010, entitled DEVICE GROUP PARTITIONS AND SETTLEMENT PLATFORM, now U.S. Pat. No. 8,548,428 (issued Oct. 1, 2013); application Ser. No. 12/694,455, filed Jan. 27, 2010, entitled DEVICE ASSISTED SERVICES INSTALL, now U.S. Pat. No. 8,402,111 (issued Mar. 19, 2013); application Ser. No. 12/695,021, filed Jan. 27, 2010, entitled QUALITY OF SERVICE FOR DEVICE ASSISTED SERVICES, now U.S. Pat. No. 8,346,225 (issued Jan. 1, 2013); application Ser. No. 12/695,980, filed Jan. 28, 2010, entitled ENHANCED ROAMING SERVICES AND CONVERGED CARRIER NETWORKS WITH DEVICE ASSISTED SERVICES AND A PROXY, now U.S. Pat. No. 8,340,634 (issued Dec. 25, 2012); application Ser. No. 13/134,005, filed May 25, 2011, entitled SYSTEM AND METHOD FOR WIRELESS NETWORK OFFLOADING, now U.S. Pat. No. 8,635,335 (issued Jan. 21, 2014); application Ser. No. 13/134,028, filed May 25, 2011, entitled DEVICE-ASSISTED SERVICES FOR PROTECTING NETWORK CAPACITY, now U.S. Pat. No. 8,589,541 (issued Nov. 19, 2013); application Ser. No. 13/229,580, filed Sep. 9, 2011, entitled WIRELESS NETWORK SERVICE INTERFACES, now U.S. Pat. No. 8,626,115 (issued Jan. 7, 2014); application Ser. No. 13/237,827, filed Sep. 20, 2011, entitled ADAPTING NETWORK POLICIES BASED ON DEVICE SERVICE PROCESSOR CONFIGURATION, now U.S. Pat. No. 8,832,777 (issued Sep. 9, 2014); application Ser. No. 13/239,321, filed Sep. 21, 2011, entitled SERVICE OFFER SET PUBLISHING TO DEVICE AGENT WITH ON-DEVICE SERVICE SELECTION, now U.S. Pat. No. 8,898,293; application Ser. No. 13/248,028, filed Sep. 28, 2011, entitled ENTERPRISE ACCESS CONTROL AND ACCOUNTING ALLOCATION FOR ACCESS NETWORKS, now U.S. Pat. No. 8,924,469; application Ser. No. 13/248,025, filed Sep. 28, 2011, entitled SERVICE DESIGN CENTER FOR DEVICE ASSISTED SERVICES, now U.S. Pat. No. 8,924,543;

This document incorporates by reference for all purposes the following provisional patent applications: Provisional Application No. 61/206,354, filed Jan. 28, 2009, entitled SERVICES POLICY COMMUNICATION SYSTEM AND METHOD; Provisional Application No. 61/206,944, filed Feb. 4, 2009, entitled SERVICES POLICY COMMUNICATION SYSTEM AND METHOD; Provisional Application No. 61/207,393, filed Feb. 10, 2009, entitled SERVICES POLICY COMMUNICATION SYSTEM AND METHOD; and Provisional Application No. 61/207,739, entitled SERVICES POLICY COMMUNICATION SYSTEM AND METHOD, filed Feb. 13, 2009; Provisional Application No. 61/270,353, filed on Jul. 6, 2009, entitled DEVICE ASSISTED CDR CREATION, AGGREGATION, MEDIATION AND BILLING; Provisional Application No. 61/275,208, filed Aug. 25, 2009, entitled ADAPTIVE AMBIENT SERVICES; and Provisional Application No. 61/237,753, filed Aug. 28, 2009, entitled ADAPTIVE AMBIENT SERVICES; Provisional Application No. 61/252,151, filed Oct. 15, 2009, entitled SECURITY TECHNIQUES FOR DEVICE ASSISTED SERVICES; Provisional Application No. 61/252,153, filed Oct. 15, 2009, entitled DEVICE GROUP PARTITIONS AND SETTLEMENT PLATFORM; Provisional Application No. 61/264,120, filed Nov. 24, 2009, entitled DEVICE ASSISTED SERVICES INSTALL; Provisional Application No. 61/264,126, filed Nov. 24, 2009, entitled DEVICE ASSISTED SERVICES ACTIVITY MAP; Provisional Application No. 61/348,022, filed May 25, 2010, entitled DEVICE ASSISTED SERVICES FOR PROTECTING NETWORK CAPACITY; Provisional Application No. 61/381,159, filed Sep. 9, 2010, entitled DEVICE ASSISTED SERVICES FOR PROTECTING NETWORK CAPACITY; Provisional Application No. 61/381,162, filed Sep. 9, 2010, entitled SERVICE CONTROLLER INTERFACES AND WORKFLOWS; Provisional Application No. 61/384,456, filed Sep. 20, 2010, entitled SECURING SERVICE PROCESSOR WITH SPONSORED SIMS; Provisional Application No. 61/389,547, filed Oct. 4, 2010, entitled USER NOTIFICATIONS FOR DEVICE ASSISTED SERVICES; Provisional Application No. 61/385,020, filed Sep. 21, 2010, entitled SERVICE USAGE RECONCILIATION SYSTEM OVERVIEW; Provisional Application No. 61/387,243, filed Sep. 28, 2010, entitled ENTERPRISE AND CONSUMER BILLING ALLOCATION FOR WIRELESS COMMUNICATION DEVICE SERVICE USAGE ACTIVITIES; Provisional Application No. 61/387,247, filed Sep. 28, entitled SECURED DEVICE DATA RECORDS, 2010; Provisional Application No. 61/407,358, filed Oct. 27, 2010, entitled SERVICE CONTROLLER AND SERVICE PROCESSOR ARCHITECTURE; Provisional Application No. 61/418,507, filed Dec. 1, 2010, entitled APPLICATION SERVICE PROVIDER INTERFACE SYSTEM; Provisional Application No. 61/418,509, filed Dec. 1, 2010, entitled SERVICE USAGE REPORTING RECONCILIATION AND FRAUD DETECTION FOR DEVICE ASSISTED SERVICES; Provisional Application No. 61/420,727, filed Dec. 7, 2010, entitled SECURE DEVICE DATA RECORDS; Provisional Application No. 61/422,565, filed Dec. 13, 2010, entitled SERVICE DESIGN CENTER FOR DEVICE ASSISTED SERVICES; Provisional Application No. 61/422,572, filed Dec. 13, 2010, entitled SYSTEM INTERFACES AND WORKFLOWS FOR DEVICE ASSISTED SERVICES; Provisional Application No. 61/422,574, filed Dec. 13, 2010, entitled SECURITY AND FRAUD DETECTION FOR DEVICE ASSISTED SERVICES; Provisional Application No. 61/435,564, filed Jan. 24, 2011, entitled FRAMEWORK FOR DEVICE ASSISTED SERVICES; and Provisional Application No. 61/472,606, filed Apr. 6, 2011, entitled MANAGING SERVICE USER DISCOVERY AND SERVICE LAUNCH OBJECT PLACEMENT ON A DEVICE.

BACKGROUND

With the advent of mass market digital communications and content distribution, many access networks such as wireless networks, cable networks and DSL (Digital Subscriber Line) networks are pressed for user capacity, with, for example, EVDO (Evolution-Data Optimized), HSPA (High Speed Packet Access), LTE (Long Term Evolution), WiMAX (Worldwide Interoperability for Microwave Access), and Wi-Fi (Wireless Fidelity) wireless networks increasingly becoming user capacity constrained. Although wireless network capacity will increase with new higher capacity wireless radio access technologies, such as MIMO (Multiple-Input Multiple-Output), and with more frequency spectrum being deployed in the future, these capacity gains are likely to be less than what is required to meet growing digital networking demand.

Similarly, although wire line access networks, such as cable and DSL, can have higher average capacity per user, wire line user service consumption habits are trending toward very high bandwidth applications that can quickly consume the available capacity and degrade overall network service experience. Because some components of service provider costs go up with increasing bandwidth, this trend will also negatively impact service provider profits.

BRIEF DESCRIPTION OF THE DRAWINGS

Various embodiments of the invention are disclosed in the following detailed description and the accompanying drawings.

FIG. **1** illustrates a high level diagram of an advanced wireless service platform end-to-end DDR reporting and processing system in accordance with some embodiments.

FIG. **2** illustrates a process for booting, executing, and updating the DDR firmware in accordance with some embodiments.

FIG. **3** illustrates an architecture for a secure embedded DDR Processor in an APU implementation in accordance with some embodiments.

FIG. **4** illustrates another architecture for a secure embedded DDR Processor in an APU implementation along with a modem bus driver in accordance with some embodiments.

FIG. **5** illustrates another architecture for a secure embedded DDR Processor in an APU implementation along with a modem bus driver in accordance with some embodiments.

FIG. **6** illustrates an architecture for a secure embedded DDR Processor in an MPU implementation in accordance with some embodiments.

FIG. **7** illustrates another architecture for a secure embedded DDR Processor in an MPU implementation in accordance with some embodiments.

FIG. **8** illustrates an architecture for a secure embedded DDR Processor in an APU and a Data Path Security Verifier (DPSV) in an MPU implementation in accordance with some embodiments.

FIG. **9** illustrates an architecture for a secure embedded DDR Processor in a Subscriber Identity Module (SIM) and a Data Path Security Verifier (DPSV) in an MPU implementation in accordance with some embodiments.

FIG. **10** illustrates another architecture for a secure embedded DDR Processor in a Subscriber Identity Module (SIM) and a Data Path Security Verifier (DPSV) in an MPU implementation in accordance with some embodiments.

FIG. **11** illustrates another architecture for a secure embedded DDR Processor in a Subscriber Identity Module (SIM) and a Data Path Security Verifier (DPSV) in an MPU implementation in accordance with some embodiments.

FIG. **12** illustrates a secure boot sequence flow diagram in accordance with some embodiments.

FIG. **13** illustrates a functional diagram for passing DDR Service Processor mailbox messages between secure and unsecure memory regions in accordance with some embodiments.

FIG. **14** illustrates a flow diagram for a DDR Processor Service Controller session authentication and verification in accordance with some embodiments.

FIG. **15** illustrates a flow diagram for secure device data records for implementing device assisted services (DAS) in accordance with some embodiments.

FIG. **16** illustrates an advanced wireless service platform end-to-end DDR reporting and processing system in accordance with some embodiments.

DETAILED DESCRIPTION

The invention can be implemented in numerous ways, including as a process; an apparatus; a system; a composition of matter; a computer program product embodied on a computer readable storage medium; and/or a processor, such as a processor configured to execute instructions stored on and/or provided by a memory coupled to the processor. In this specification, these implementations, or any other form that the invention may take, may be referred to as techniques. In general, the order of the steps of disclosed processes may be altered within the scope of the invention. Unless stated otherwise, a component such as a processor or a memory described as being configured to perform a task may be implemented as a general component that is temporarily configured to perform the task at a given time or a specific component that is manufactured to perform the task. As used herein, the term 'processor' refers to one or more devices, circuits, and/or processing cores configured to process data, such as computer program instructions.

A detailed description of one or more embodiments of the invention is provided below along with accompanying figures that illustrate the principles of the invention. The invention is described in connection with such embodiments, but the invention is not limited to any embodiment. The scope of the invention is limited only by the claims and the invention encompasses numerous alternatives, modifications and equivalents. Numerous specific details are set forth in the following description in order to provide a thorough understanding of the invention. These details are provided for the purpose of example and the invention may be practiced according to the claims without some or all of these specific details. For the purpose of clarity, technical material that is known in the technical fields related to the invention has not been described in detail so that the invention is not unnecessarily obscured.

In some embodiments, secure device data records (DDRs) are provided. In some embodiments, secure DDRs for device assisted services are provided. In some embodiments, secure DDRs for device assisted services are provided for service usage monitoring of a wireless communication device (e.g., firmware based monitoring of network service usage, such as based on a 5-tuple of a source address, port address, destination address, destination port, and protocol). In some embodiments, secure DDRs for device-assisted services are provided for service usage monitoring of a wireless connection and other input/output (I/O) connections or ports of a wireless communication device (e.g., firmware-based monitoring of network service usage, such

as based on a 5-tuple of a source address, port address, destination address, destination port, and protocol). In some embodiments, a system for secure DDRs includes a processor of a wireless communication device for wireless communication with a wireless network, in which the processor is configured with a secure execution environment, and in which the secure execution environment is configured to: monitor service usage of the wireless communication device with the wireless network; and generate a plurality of device data records of the monitored service usage of the wireless communication device with the wireless network, in which each device data record is associated with a unique sequence order identifier; and a memory coupled to the processor and configured to provide the processor with instructions. In some embodiments, a system for secure DDRs includes a processor of a wireless communication device for wireless communication with a wireless network, in which the processor is configured with a secure execution environment, the secure execution environment configured to: monitor service usage of the wireless communication device with one or more of the networks and I/O connections for the device including but not limited to a wide area wireless network (e.g., 2G, 3G, 4G, etc.), a WiFi network or connection, a USB network or connection, an Ethernet network or connection, a Firewire connection, a Bluetooth connection, a near field communication (NFC) connection or another I/O connection or port; and generate a plurality of device data records of the monitored service usage of the wireless communication device with the wireless network, in which each device data record is associated with a unique sequence order identifier; and a memory coupled to the processor and configured to provide the processor with instructions. In some embodiments, the secure execution environment including the secure DDR processor is located in an application processor, in a modem processor, and/or in a subscriber identity module (SIM).

In many of the disclosed embodiments, a secure device data record processing system acts on communications that flow over a wide area wireless network connection to the device (e.g., a 2G, 3G, or 4G connection) or a wide area wireless modem (e.g., a 2G, 3G, or4G modem). As would be understood by one of ordinary skill in the art, the secure device data record processing system can also act on communications that flow over one or more additional I/O networks, connections, ports or modems (e.g., a WiFi network, connection, port, or modem; a USB network, connection, port, or modem; an Ethernet network, connection, port, or modem; a Firewire network, connection, port, or modem; a Bluetooth network, connection, port, or modem; a near field communication (NFC) network, connection, port, or modem; or another I/O connection, port, or modem).

In some embodiments, a system for secure DDRs includes a processor of a wireless communication device for wireless communication with a wireless network, in which the processor is configured with a secure execution environment, and in which the secure execution environment is configured to: monitor service usage of the wireless communication device with the wireless network (and possibly one or more additional I/O connections for the device); and generate a plurality of device data records of the monitored service usage of the wireless communication device with the wireless network (and possibly one or more additional I/O connections for the device), in which each device data record is one of an ordered sequence of device data records with each sequential device data record providing an accounting of service usage over a service usage interval spanned by the device data record, and in which each device data record is associated with a secured unique sequence order identifier; and a memory coupled to the processor and configured to provide the processor with instructions. In this manner, communication activity over a device wireless access network connection (or other I/O port communication connection) is securely monitored and reported to a network server for further processing to determine if device access service policies are being properly enforced, or to determine of malicious software in the device operating environment is accessing the network (or other I/O connection or port). In some embodiments, the secure execution including the secure DDR processor environment is located in an application processor, in a modem processor, and/or in a subscriber identity module (SIM).

In some embodiments, a communication channel for delivering secure device data records to a network server for further analysis and processing includes a secure message receipt feedback loop, and if the secure message feedback loop is interrupted, a device environment security error condition is detected and acted on. In some embodiments, the ordered sequence of device data records is communicated to a service controller using a signed or encrypted communication channel. In some embodiments, the service controller observes the device data records to determine compliance with a device-based access network (or other I/O connections or ports) access policy. In some embodiments, the service controller also observes the integrity of the ordered sequence of device data records to determine if device data records have been tampered with or omitted. In some embodiments, if the service processor determines that the device data records have not been tampered with or omitted, the service controller sends back a signed or encrypted device data record receipt message. In some embodiments, if the service processor determines that the device data records have been tampered with or omitted, the service controller sends back an error message or does not send back a signed or encrypted device data record receipt message. In some embodiments, if the system for secure DDRs receives an error message from the service controller, or does not receive a signed or encrypted device data record receipt message within a certain period of time or within a certain number of transmitted device data records or within a certain amount of communication information processed, then (i) a device configuration error message can be generated for delivery to a security administrator or server, or (ii) one or more of the wireless network connections (or other I/O connection or port) for the wireless communication device are either blocked or restricted to a pre-determined set of safe destinations. In this manner, if a device service processor, the device operating environment, device operating system or device software is tampered with in a manner that produces wireless network (or other I/O port) access service usage characteristics that are not compliant with expected policy or allowed policy, a device configuration error message can be generated or device wireless network access (or other I/O connection access) can be restricted or blocked. Such embodiments can be helpful in securing device based network access (or I/O control) policies and can also be helpful in identifying device software that has been tampered with or any malware that is present on the device. In some embodiments, the restriction on wireless network access (or other I/O access) results in access to a limited number of network destinations or resources sufficient to allow further analysis or troubleshooting of the device configuration error condition.

Various techniques for providing device assisted services (DAS), are disclosed in co-pending U.S. patent application

Ser. No. 12/380,780, entitled AUTOMATED DEVICE PROVISIONING AND ACTIVATION, filed on Mar. 2, 2009, published as U.S. Pub. App. No. 2010/0192212, U.S. patent application Ser. No. 12/695,019, entitled DEVICE ASSISTED CDR CREATION, AGGREGATION, MEDIATION AND BILLING, filed on Jan. 27, 2010, published as U.S. Pub. App. No. 2010/0197266, and U.S. patent application Ser. No. 12/694,445, entitled SECURITY TECHNIQUES FOR DEVICE ASSISTED SERVICES filed on Jan. 27, 2010, published as U.S. Pub. App. No. 2010/0199325, which are incorporated herein by reference for all purposes.

In some embodiments, a DDR processor is provided for wireless communication devices (e.g., for assisting in implementation of device assisted services (DAS) for wireless network service usage for wireless communication devices, such as a cellular phone, smart phone, laptop, PDA, gaming device, music device, tablet, computer, and/or any other device with wireless communication access) as described herein with respect to various embodiments. In some embodiments, a secure DDR processor (e.g., implemented/executed in a secure execution environment) is provided. In some embodiments, a DDR processor is secured using various techniques described herein. In some embodiments, the DDR processor includes a DDR generator. In some embodiments, the DDR processor generates DDRs. In some embodiments, the DDR processor reports DDRs to a network element (e.g., a service controller, a DDR network storage system, and/or another network element). In some embodiments, the secure DDR processor reports the DDRs to a device element/function, such as a service processor, which aggregates the DDRs (e.g., and can include other service usage and/or other information) in a report (e.g., or service processor reports) that is communicated to a network element. In some embodiments, DDRs as well as service processor reports are generated and communicated to a network element. In some embodiments, a DDR processor is secured using various techniques described herein.

In some embodiments, DDRs include device assisted and/or device based monitored service usage (e.g., based on various criteria, such as for a specified time interval, and/or event) as described herein with respect to various embodiments. In some embodiments, DDRs are periodically reported. In some embodiments, DDRs are reported based on an event and/or a request from a network element (e.g., a service controller or another network element/function). In some embodiments, DDRs are communicated to a device service processor (e.g., or another device element/function), which aggregates such DDRs and periodically provides service usage reports including such DDRs or providing such service usage reports based on a request and/or an event. In some embodiments, each DDR includes a unique identifier (e.g., a unique sequence identifier). In some embodiments, a missing DDR can be detected using the unique identifiers (e.g., sequence count and/or time stamp information associated with each DDR allows for detection of a potentially suspicious service usage event, such as a missing, delayed, and/or compromised device data record determined using the sequence count and/or time stamp information, and responsive/corrective actions can be performed upon detection of the suspicious service usage event, as described herein). In some embodiments, if a DDR is not received within a certain time period, then an access controller is activated to limit network access until DDRs are properly generated and reported (e.g., a network element, such as a service controller, sends a keep alive signal to the device to implement a time out period for verifying receipt of properly generated and validated DDRs from the device, and if the keep alive signal is not received within a specified time period, then the device based secured access controller can implement the restricted network access control function).

In some embodiments, a DDR network storage system is provided as described herein with respect to various embodiments. In some embodiments, a service controller is provided that includes the DDR network storage system and a DDR reconciliation function (e.g., for reconciling DDR records and/or DDR reports or other device based and/or network based service usage reports, such as CDRs, micro CDRs, and/or IPDRs or other service usage reports). In some embodiments, a network based reconciliation function reconciles DDRs (e.g., aggregated DDRs and/or DDR reports) with one or more network based service usage measures. In some embodiments, the network based reconciliation function reconciles DDRs with two or more network based service usage measures. In some embodiments, the network based reconciliation function reconciles DDRs with two or more network based service usage measures (e.g., CDRs, FDRs, IPDRs, DPI based measures including traffic related events, such as NBS and/or QoS, and/or other network based service usage measures). In some embodiments, the network based reconciliation function reconciles two or more device based service usage measures (e.g., DDRs, service processor reports, and/or other device based service usage measures including traffic related events, such as NBS and/or QoS) with a network based service usage measure. In some embodiments, the network based reconciliation function reconciles two or more device based service usage measures with two or more network based service usage measures. In some embodiments, the network based reconciliation function reconciles two or more device based service usage measures, in which one of the device based service usage measures is secured (e.g., deemed as secured and/or trusted based on various techniques described herein, such as for secure DDRs) and one or more of the other device based service usage measures is not secured (e.g., not completely trusted, such as a service processor reports generated by a service processor that is not implemented in a secure execution environment). In some embodiments, the reconciliation function reconciles based on various different reporting formats, such as time measure intervals, units of measure, and/or other different criteria used by different device and network based various service usage measures.

In some embodiments, a secure access controller is provided as described herein with respect to various embodiments. In some embodiments, the DDR processor includes the secure access controller. In some embodiments, the secure access control ensures that a wireless communication device with DAS does not have open network access until and/or unless the device is properly generating and reporting secure DDRs.

In some embodiments, the DDR processor includes a network busy state (NB S) monitoring and reporting function that is secured as described herein with respect to various embodiments. In some embodiments, a network element aggregates NBS information received from one or more wireless communication devices from the same sector and/or from various sectors within the service vicinity and establishes either the same network busy state rules (e.g., access control, charging and notification) and/or changes the exiting NBS rules appropriately.

In some embodiments, a secured boot sequence is provided. In some embodiments, the secured boot sequence

ensures that the DDR processor is secured and properly generating DDRs prior to providing open network access control to the wireless communication device. In some embodiments, the secured boot sequence includes using the secure access controller to restrict network access until the secured boot sequence is completed. In some embodiments, the secure boot sequence includes verifying DDR ACK and receipt frames.

In some embodiments, a processor of a wireless communication device for wireless communication with a wireless network is provided, in which the processor is configured with a secure software or firmware instruction execution environment, and in which a program in the secure software or firmware instruction execution environment is configured to: monitor service usage of the wireless communication device with the wireless network; generate a plurality of device data records (DDRs) of the monitored service usage of the wireless communication device with the wireless network, in which the device data records are secure device data records for the monitored service usage, in which each device data record forms a portion of an ordered sequence of device data records with each sequential device data record providing an accounting of service usage over a service usage interval spanned by the device data record, and in which each device data record is associated with a unique sequence order identifier that is also secured.

In some embodiments, the sequence of device data records forms a contiguous and uninterrupted reporting of device service usage while the device is active on the network. In some embodiments, the secure software or firmware instruction execution environment is located and configured such that the network can only be accessed through a data path that is monitored by the program in the secure software or firmware instruction execution environment. In some embodiments, the secure software or firmware instruction execution environment is located in a modem processor (e.g., MPU). In some embodiments, the secure software or firmware instruction execution environment is located in an application processor (e.g., APU). In some embodiments, the secure software or firmware instruction execution environment is located in a subscriber identity module (SIM) (e.g., SIM card). In some embodiments, the secure software or firmware instruction execution environment is located in a combination of an APU, MPU, and/or SIM.

In some embodiments, the device data records are secured using various cryptographic techniques described herein, such as using one or more of the following: encryption, digital signatures, and integrity checks.

In some embodiments, a DDR processor located in a secure execution environment is configured to communicate a sequence of device data records to a device data record storage function, such as within a network element (e.g., a service controller), in which the plurality of secure device data records in combination with the unique sequence identifier provides traceability to identify if one or more usage records have been tampered with or omitted from the sequence of data records transmitted to the storage function. In some embodiments, the unique sequence identifier includes one or more of the following: sequence count, time stamp, start time indicator, stop time indicator, contiguous time interval identifier, and aggregate usage count at the beginning or end of the record, reference time, or elapsed time at the beginning or end of the record.

In some embodiments, the generation of a new device data record is determined by one or more of the following: a predetermined time, elapsed period of time, elapsed period of time since last report, maximum limit on elapsed period of time since last report, amount of one or more aspects of aggregate data usage, amount of one or more aspects of data usage since last report, maximum limit for one or more aspects of data usage since last report, a request to generate a DDR, a limit on maximum amount of memory or storage media required to contain or process DDR information prior to transmission, device power on or power off, modem or device subsystem power on or power off, modem or device subsystem entering or exiting a power save state, device or device subsystem authentication with a network element or server, or a detected event triggered by one or more service usage activities or detection of a service usage record tampering or fraud event or transition to a new network busy state and/or QoS traffic event.

In some embodiments, the DDR processor, service processor, or another device based element/function transmits DDRs based on one or more of the following: maximum time increment, maximum service usage increment, polling from service processor, and/or polling from service controller. In some embodiments, a maximum time increment on DDR transmissions is established to ensure minimal or no services can be hijacked once service controller authentication takes place. In some embodiments, at least a portion of the restricted set of network service activities includes access to the service controller or other network elements necessary to manage the ability of the device to access the network once the service controller authenticates with the service processor and conforms proper operation of the secure DDR generator. In some embodiments, at least a portion of the restricted set of network service activities includes access to a minimum set of roaming network service activities required to initiate the process for a roaming network to authenticate access privileges for the device. In some embodiments, at least a portion of the restricted set of network service activities includes access to a minimum set of roaming network service activities required to initiate the process for a corporate network to authenticate access privileges for the device. In some embodiments, at least a portion of the restricted set of network service activities includes access to a minimum set of roaming network service activities required to initiate the process for an MVNO network to authenticate access privileges for the device. In some embodiments, at least a portion of the more permissive set of service activities is the available to access at least a subset of the services available on a roaming network. In some embodiments, at least a portion of the more permissive set of service activities is the available to access at least a subset of the services available on an MVNO network. In some embodiments, at least a portion of the more permissive set of service activities is the available to access at least a subset of the services available on a corporate network.

In some embodiments, the device data record service usage information includes measurement of one or more of the following: voice service (e.g., VOIP) usage records; text service usage records; data network service usage records; data network flow data records; data network general purpose, aggregate or bulk service usage records; service usage classified at least in part by far end destination; service usage records classified at least in part by layer 3 network communications information such as IP address or ATM address; service usage classified at least in part by layer 4 network communications information such as IP address and port combinations; data network service usage records comparable to network based flow data records such as network based FDRs, CDRs or IPDRs; service usage classified at

least in part by time of day; service usage classified at least in part by geographic location; service usage classified at least in part by the active network servicing the device; service usage classified at least in part by a roaming network connected to the device; service usage classified at least in part by network busy state or network congestion; service usage classified at least in part by QoS, service usage records classified at least in part by layer 7 network communications information such as server name, domain name, URL, referrer host or application service flow information; service usage classified at least in part by network communications protocol such as TCP, UDP, DNS, SMTP, IMAP, POP, FTP, HTTP, HTML, VOIP; service usage classified at least in part by the application name or the application identifier assigned by the operating system or another application identifier unique to the application acquiring or requesting service (e.g., device user identifier, such as Android user ID on an Android based device); and service usage classified at least in part by service activity.

In some embodiments, the DDR processor located in the secure execution environment is configured to send the device data records to a network element (e.g., storage function located in the network). In some embodiments, the DDR processor located in the secure execution environment is configured to provide a secure communication channel between the secure software or firmware instruction execution environment and the storage function located in the network (e.g., a network element, such as a service controller), in which the communication channel security protocol is configured to avoid tampering with the secure device data records (DDRs). In some embodiments, the DDR processor located in the secure execution is configured to perform an authentication sequence or process with a network element (e.g., a service controller) in which a secure device data record sequence initiation message is sent to a network destination followed by authentication protocol exchange sequences to authenticate the network element before transmitting the secure data records.

In some embodiments, the DDR processor located in the secure execution environment is configured to perform the following: send the device data record sequence to a network element (e.g., via a secure channel); implement a secure access controller for restricting network access to a predetermined subset of available network destinations; receive a secure message from a trusted network element (e.g., either directly from the network element or from another function on the device that forwards the secure messages from the network element to the DDR processor in the secure execution environment); if a validated (e.g., properly secured and configured) message is received that acknowledges receipt of one or more secure device data records or acknowledges an access network authentication sequence, then the secure access controller allows unrestricted or less restricted access to the network; if a validated message is not received that acknowledges receipt of one or more secure device data records or acknowledges an access network authentication sequence, then the secure access controller restricts access to a predetermined set of network destinations or functions until a validated message is received that acknowledges receipt of one or more secure device data records or acknowledges an access network authentication sequence.

In some embodiments, the DDR processor located in the secure execution environment is configured with an access controller that restricts access to a predetermined set of network destinations or functions if a predetermined maximum amount of time passes between: the time that a first message acknowledging receipt of one or more secure device data records or an authentication sequence is received by the DDR processor in the secure execution environment and the time that a second message acknowledging receipt of one or more secure device data records or an authentication sequence is received by the DDR processor in the secure execution environment; or the time that one or more secure device data records are sent by the DDR processor in the secure execution environment and the time that a message acknowledging receipt of one or more secure device data records or an authentication sequence is received by DDR processor in the secure execution environment; and the access controller otherwise allows unrestricted or less restricted access to the network.

In some embodiments, the DDR processor located in the secure execution environment is configured to send the device data record to the device data record storage function located in the network by first sending it to a second program function located on the device that then forwards the device data record to the device data record storage function located in the network. In some embodiments, the DDR processor located in the secure execution environment is configured to provide a second service usage report sequence in addition to the secure device data record sequence. In some embodiments, another client function/element (e.g., a service processor function/element or agent) is configured to provide a second service usage report sequence in addition to the secure device data record sequence. In some embodiments, the second service usage report sequence includes service usage classification that is different at least in part from the secure device data records. In some embodiments, the difference between device data usage classification includes at least in part that one record includes one or more of the following: application information, layer 7 network information, service flow association information, user defined input information, network busy state information, active network information or other information while the other record does not.

In some embodiments, the DDR processor located in the secure execution environment is configured to send the device data record sequence and the second device data record sequence in a manner that allows for simplified reconciliation of the two records. In some embodiments, the DDR processor located in the secure execution environment is configured to provide the second service usage report sequence in a manner that provides approximate alignment of a measurement interval start time and stop time spanned by one or more of the second service usage reports and the measurement interval spanned by one or more of the secure device data records.

In some embodiments, the DDR processor located in the secure execution environment is configured to: be based on the monitoring of service usage of the wireless communication device with the wireless communication network, create and record characterizations of network performance; analyze the characterizations of network performance and reduce the performance characterizations into one or more network performance statistics that characterize in summary form the performance level or congestion level of the network as experienced by the device; generate a plurality of network performance report messages that include a sequence of the network performance statistics created at different times; in which the network performance report messages are secured network performance reports; and send the secured network performance reports to the storage function located in the network.

In some embodiments, a processor of a network device configured as a device data record storage and processing function, for wireless communication with a wireless network in wireless communication with a plurality of wireless communication devices, with each wireless device including a secure device data record generator, in which the processor of the network device is further configured to: provide individual secure communication channels between each of the plurality of secure device data record processor and the network device, in which the communication channel security protocol is configured so that tampering with the device data records may be detected; receive over the secure communications channel a plurality of device data records from each of the secure device data record processors, in which the plurality of secure device data records are service usage records of monitored service usage of the wireless communication device with the wireless network, and in which each device data record forms a portion of an ordered sequence of device data records with each sequential device data record providing an uninterrupted accounting of service usage over the service usage interval spanned by the device data record, and in which the sequence of device data records forms a contiguous and uninterrupted reporting of device service usage, and in which each device data record is associated with a unique sequence order identifier; provide a device data record storage function in which the device data record sequence for each device is stored; for each device, analyze the stored sequence of device data records to determine if one or more of the device data records have been compromised by verifying that the information in the service usage record is properly configured according to the secure communication channel protocol; for each device, determine if one or more of the device data records have been removed or blocked from the device data record sequence originally transmitted from the device by determining if the secure contiguous sequence identifiers for the aggregate sequence are all present in the sequence; and if any device data record has been compromised, delayed or removed, set a fraud detection error flag for that device to restrict network access and also signals network apparatus or a network administrator to take further action.

In some embodiments, the secure device data records included in the device data record sequence include a secure network performance report that characterizes the network performance or congestion at the time the secure device data record was generated. In some embodiments, the device data record sequence is used at least in part as a record of service usage that forms an input factor in the business logic or rules used to compute a service usage bill. In some embodiments, the device data record sequence is used at least in part as a record of service usage that forms an input factor in the business logic or rules used to determine if one or more device access network service policies are being properly enforced. In some embodiments, the device data record sequence is used at least in part as a record of service usage that forms an input factor in updating an end user service usage notification message, service usage notification display or service purchase message trigger event.

In some embodiments, the network device processor is further configured to receive a device data record sequence from a second device program function that forwards the device data record after receiving it from the secure device data record generator. In some embodiments, the network device processor is further configured to receive a second service usage data record sequence from a second device program function. In some embodiments, the two device data record sequences possess service usage classification that is different at least in part (e.g., use of classification parameters; layer 3/4 and/or layer 7) over the same (or approximately the same or overlapping) time span. In some embodiments, the network device processor is further configured to compare the two data record sequences and determine if the two sequences of service usage reports match one another to within an allowable tolerance limit.

In some embodiments, the secure device data record(s) can accompany the corresponding layer-7 classification information (e.g., domain names, application identifier, HTTP information, associative classification, and/or other information as described herein) with the 5-tuple classification information (e.g., source address, port address, destination address, destination port, and protocol) received from the Service Processor included in the DDR report, which, for example, can be sent to the Service Controller (e.g., or another network element) to assist in the service usage reconciliation and/or verification, using various techniques described herein. In some embodiments, one or more of the service usage reconciliation and/or verification operations using the layer-7 classification information and the 5-tuple classification information are performed locally in the client (e.g., in a secure execution area). In some embodiments, one or more of the service usage reconciliation and/or verification operations using the layer-7 classification information and the 5-tuple classification information are performed locally in the client (e.g., in a secure execution area), and one or more of the service usage reconciliation and/or verification operations using the layer-7 classification information and the 5-tuple classification information are performed in the network (e.g., at one or more network elements, such as the Service Controller).

In some embodiments, a portion of the matching criteria is determining if the two sequences of service usage reports match in the reported network performance levels or network congestion levels. In some embodiments, the tolerance limit is based on total data usage over the usage interval spanned by the two data record sequences.

In some embodiments, the network device processor is further configured to identify the amount of service usage for one or more classification categories in the second service usage record sequence that can be reconciled with service usage for one or more classification categories in the secure device data record sequence. In some embodiments, a criteria in the classification category reconciliation includes determining if the two sequences of service usage reports match in the reported network performance levels or network congestion levels.

In some embodiments, the network device processor is further configured to identify the amount of service usage from the second service usage record sequence that cannot be reconciled with known service usage classifications in the secure device data record sequence. In some embodiments, a criteria in the classification category reconciliation includes determining if the two sequences of service usage reports match in the reported network performance levels or network congestion levels.

In some embodiments, a minimum tolerance limit is placed on the amount, relative amount or percentage of service usage for one or more classification categories in the second service usage record sequence that can be matched to or correlated with one or more classification categories in the secure device data record sequence. In some embodiments, when the minimum tolerance limit is not met a fraud detection error flag for that device is set to restrict network access and also signals network apparatus or a network administrator to take further action.

In some embodiments, a maximum tolerance limit is placed on the amount, relative amount or percentage of service usage for one or more classification categories in the second service usage record sequence that cannot be matched to or correlated with one or more classification categories in the secure device data record sequence. In some embodiments, when the maximum tolerance limit is exceeded a fraud detection error flag for that device is set to restrict network access and also signals network apparatus or a network administrator to take further action.

In some embodiments, the network device processor is further configured to determine if the service usage report spanned by the secure device data record sequence is consistent to within predetermined tolerance limits with one or more device service usage enforcement policies intended to be in place. In some embodiments, if the tolerance limits are exceeded a fraud detection error flag for that device is set to restrict network access and also signals network apparatus or a network administrator to take further action. In some embodiments, the network device processor is further configured to determine if the service usage report spanned by the second device service usage report sequence is consistent to within predetermined tolerance limits with one or more device service usage enforcement policies intended to be in place. In some embodiments, if the tolerance limits are exceeded a fraud detection error flag for that device is set to restrict network access and also signals network apparatus or a network administrator to take further action.

In some embodiments, the network device processor is further configured to provide one or more secure messages to each of multiple device programs running in a secure software or firmware instruction execution environment, in which the secure messages either acknowledge receipt of one or more secure device data records or acknowledge an access network authentication sequence. In some embodiments, the network device processor is further configured to send, for each device, a series of secure messages that directly or implicitly instruct the programs running in a secure software or firmware instruction execution environment to allow unrestricted or less restricted network access for a period of time that is either predetermined or is specified in a message from the network device processor to the program running in a secure software or firmware instruction execution environment. In some embodiments, the network device processor is further configured to send, for each device, a secure message that instructs the program running in a secure software or firmware instruction execution environment to restrict network access to a predetermined set of network destinations or functions.

In some embodiments, a secure network busy state (NBS) monitoring and reporting is provided. In some embodiments, the secure NBS monitoring and reporting facilitates NBS charging and control enforcement. In some embodiments, a processor of a wireless communication device for wireless communication with a wireless network, in which the processor is configured with a secure software or firmware instruction execution environment, and in which a DDR processor in the secure execution environment is configured to: monitor service usage of the wireless communication device with the wireless network; based on the monitoring of service usage of the wireless communication device with the wireless communication network, create and record characterizations of network performance; analyze the characterizations of network performance and reduce the performance characterizations into one or more network performance statistics that provide indications of the performance level or congestion level of the network as experienced by the device; generate a plurality of network performance report messages that include a sequence of the network performance statistics created at different times; in which the network performance report messages are secured network performance reports; and send the secured network performance reports to the storage function located in the network.

In some embodiments, the measures of network busy state or network congestion are formed by observing one or more of: the number of network access attempts, the number of access successes the number of access failures, the delay between access attempt and access success, network throughput data rate, data error rate, packet error rate, packet repeat rate, one way or round trip delay, one way or round trip delay jitter, TCP traffic back off parameters, TCP window parameters, modem channel quality, modem channel power, modem channel signal to noise ratio, modem over the air data rate, or network throughput data rate versus modem over the air data rate, and the sub network of the network that the device is connected to.

In some embodiments, the measures of service usage are obtained from observing the network traffic generated by the service usage of the device user. In some embodiments, the measures of service usage are obtained from: communicating one or more network traffic sequences between the device and a network function; and using the subset of service usage monitoring that includes the network traffic sequences to create and record characterizations of network performance.

In some embodiments, a processor of a network device configured as a device secure network performance record storage and processing function, for wireless communication with a wireless network in wireless communication with a plurality of wireless communication devices, with each wireless device including a secure network performance record generator, in which the processor of the network device is further configured to: provide individual secure communication channel between each of the plurality of secure network performance record generators and the network device, in which the communication channel security protocol is configured so that tampering with the secure network performance record may be detected; receive over the secure communications channel a plurality of secure network performance records from each of the secure network performance record generators, in which the plurality of secure network performance record are network performance statistics that provide indications of the performance level or congestion level of the network as experienced by the device; provide a device secure network performance record function in which the secure network performance record sequence for each device is stored; determine the sub network of the network that each device is connected to, and analyze the secure network performance records received from multiple devices connected to the same sub network to determine an aggregate characterization of the performance level or congestion level for the sub network, and perform the same operation to determine an aggregate characterization of the performance level or congestion level for other sub networks connected to the network; store the results of the aggregate characterization of the performance level or congestion level for each sub network that is characterized, and make the stored results available to other network devices or functions; and if any device data record has been compromised, delayed or removed, set a fraud detection error flag for that device to restrict network access and also signals network apparatus or a network administrator to take further action.

In some embodiments, a network performance characterization system is provided. In some embodiments, the network performance characterization system includes a processor of a wireless communication device for wireless communication with a wireless network, in which the processor is configured with a secure software or firmware instruction execution environment, and in which a program in the secure software or firmware instruction execution environment is configured to: communicate a plurality of traffic sequences between the device and a network device, in which the traffic sequences are secured; and initiate each traffic sequence based on one or more of the following: a pre-determined time or time interval, a service usage event or service usage condition that arises on the device, and as a response to a message communicated from the network device; and a processor of the network device in secure communication with the program (e.g., DDR processor) in the secure execution environment is configured to: monitor the plurality of the secure traffic sequences between service usage of the wireless communication device with the wireless network; use the monitoring results of the secure traffic sequences, create and record characterizations of network performance; analyze the characterizations of network performance and reduce the performance characterizations into one or more network performance statistics that provide indications of the performance level or congestion level of the network as experienced by the device; generate a plurality of network performance reports that include a sequence of the network performance statistics created at different times; in which the network performance reports are stored in a network performance report storage function; and the network performance report storage function is made available to other network devices or functions.

In some embodiments, the DDRs are applied to one or more of the following activities: service billing, service control, and/or access control; service usage measurement (e.g., fraud resistant and scalable device measurement of service usage); verifying monitored service usage; verifying that service usage control policies are properly implemented on the device; and a source of performance monitoring and/or measurement.

In some embodiments, the DDRs are communicated to a network element based on a configured time interval; based on a configured usage size (e.g., buffer size limit or predefine size limit for a device or based on other criteria); when modem resources reach a predefined threshold (e.g., usage threshold, such as out of memory or approaching a threshold limit usage of memory); in response to a request from a service processor executed on an application processor of the wireless communication device; in response to a request from a service controller (e.g., either directly or indirectly through a service processor executed on an application/general processor of the wireless communication device).

In some embodiments, a reconciliation process is provided for reconciling a plurality of device data records and service processor usage reports for monitored wireless communication devices to verify reported service usage for each of the monitored wireless communication devices, which includes one or more of the following: reconcile the received device data records from each of the plurality of monitored wireless communication devices and service processor usage reports for a predefined time period or based on a comparison for each received service processor usage report and associated device data records or based on a predefined service usage amount/bulk usage amount or based on a predefined period of time or based on a service policy verification setting; verify that the monitored wireless communication device has not been tampered with or compromised (e.g., missing, modified, delayed, and/or unreconciled DDRs or a discrepancy between received micro-CDRs and DDRs outside of tolerances); verify that the monitored wireless communication device's service usage is compliant with an associated service policy and/or service plan; verify that the monitored wireless communication device properly implemented a traffic control policy of an associated service policy/service plan for a period of time (e.g., QoS, NBS, throttling); verify an accuracy of the received service usage measures using the received plurality of device data records and service processor usage reports for each of the monitored wireless communication devices; and reconcile using a tolerance threshold. In some embodiments, the tolerance threshold (e.g., fixed amount, percentage based) accounts for variances between the received device data records and service processor usage reports for synchronized monitored time periods, including one or more of the following: a service provider configured tolerances, a configured tolerance in the reconciliation process for unclassified service usage in the received device data records and/or service usage that cannot be correlated with known service activities, redirected service usage activities for content distribution network services, and/or other possible differences and/or variations.

In some embodiments, a reconciliation engine performs one or more of the following: determine one or more patterns to account for synchronization errors or traffic classification errors over time (e.g., training period, periodic refining using heuristics); determine if the received device data records are properly associated within policy service usage activities (e.g., reverse DNS lookup, white list, or web crawler); perform a classification operation on the received plurality of device data records that is similar to a service processor classification (e.g., layer 7 service usage activity classification, such as reported in micro-CDRs/uCDRs), then group the received plurality of device data records usage into service usage activity classifications used by the service processor; determine the service processor usage reports' service usage measures for each service activity classification, then determine a percentage of each service usage activity that can be verified by classifying the received device data records' service usage measures; implement adaptive ambient techniques for reconciliation (e.g., using threshold based comparison techniques, for example, with DDRs and the use of reverse DNS for packet classification, then using the ratio of allowed usage for host sponsored service vs. ALL white-listed host names, vs. all unknown host names, vs. synchronization error tolerance, perform a comparison (with acceptable percentage of error) and identify potential fraud scenarios; perform reconciliation for one or more of the following classified services: sponsored services, user (e.g. open access) services, carrier services, network protection services (e.g., services that can be classified as background and thus be delayed in order to protect network bandwidth/resources for foreground/higher priority services) that are a part of the service plan classification definition; and reconcile using a third service usage measure (e.g., network based CDRs, FDRs, and/or IPDRs). In some embodiments, the secure device data record(s) can accompany the corresponding layer-7 classification information (e.g., domain names, application identifier, HTTP information, associative classification, and/or other information as described herein) with the 5-tuple classification information (e.g., source address, port address, destination address, destination port, and protocol) received from the Service Processor included in the DDR report, which, for example, can

be sent to the Service Controller (e.g., or another network element) to assist in the service usage reconciliation and/or verification, using various techniques described herein.

In some embodiments, DDRs include one or more of the following: 5-tuple classification information, including a source address, a port address, a destination address, a destination port, and a protocol (e.g., inbound and outbound) and byte counts, and the tolerance threshold accounts for one or more of the following: usage measurement differences, time synchronization differences and/or information that is classified by the service processor with the advantage of information not available in the DDR processor classifier (e.g. application information, associative information, simpler classification implementations/algorithms in the DDR processor, etc.). In some embodiments, the service processor usage reports include one or more of the following that is not included in the received device data records: layer 7 monitored service usage information (e.g., domain names, application identifier, HTTP information, associative classification, and/or other information as described herein), and only a certain percentage of the received device data records are identified as associated traffic with a service usage activity, and for each service usage activity an allowance for unclassified traffic that varies by activity is provided (e.g., Amazon is "closed" while CNN is very diverse), in which a sum of all unclassified allowances does not exceed a total of unclassified received device data records information, and relaxing the tolerance for a first time interval and tightening the tolerance for a second time interval, in which the second time interval is longer than the first time interval. In some embodiments, the secure device data record(s) can accompany the corresponding layer-7 classification information (e.g., domain names, application identifier, HTTP information, associative classification, and/or other information as described herein) with the 5-tuple classification information (e.g., source address, port address, destination address, destination port, and protocol) received from the Service Processor included in the DDR report, which, for example, can be sent to the Service Controller (e.g., or another network element) to assist in the service usage reconciliation and/or verification, using various techniques described herein.

Advanced Wireless Service Platform (AWSP)

In some embodiments, an Advanced Wireless Service Platform (AWSP) is provided. In some embodiments, AWSP provides an enhanced networking technology platform that supports existing services and also provides for various new Internet and data service capabilities for wireless networks (e.g., 4G, 3G, and/or 2G networks), as described herein with respect to various embodiments. In some embodiments, wireless devices, processor(s), firmware (e.g., DDR firmware, as described herein with respect to various embodiments), and software provide an enhanced role in wireless network service policies for charging, access control and service notification to implement AWSP, as described herein with respect to various embodiments.

In some embodiments, AWSP supports a wide range of services, devices, and applications for consumer, enterprise, and machine to machine markets, as described herein with respect to various embodiments. In some embodiments, AWSP supports various device types, including the following: 4G and 3G smart phones, 4G and 3G feature phones, 4G and 3G USB dongles and cards, 4G-to-WiFi and 3G-to-WiFi bridge devices, 4G and 3G notebook and netbook computing devices, 4G and 3G slate computing devices, 4G and 3G consumer electronics devices (e.g., cameras, personal navigation devices, music players, and home power meters), and machine to machine devices (e.g., various types of consumer and industrial devices with minimal user interface (UI) capabilities such as geo-location tracking devices, parking meters, and vending machines).

In some embodiments, AWSP includes a device data record (DDR) processor. In some embodiments, the DDR processor includes firmware that is integrated into a secure hardware execution environment within an AWSP compliant processor (e.g., a processor or set of processors that are compatible with, support, approved for and/or certified for AWSP, such as through a wireless carrier AWSP chipset certification program). In some embodiments, the AWSP compliant processor is certified to qualify the processor for proper services delivery over AWSP, as described herein with respect to various embodiments.

In some embodiments, a DDR Firmware Developer's Kit (DDR FDK) is provided. In some embodiments, the DDR FDK includes firmware code (e.g., written in C), detailed DDR Processor specifications, detailed chipset Secure Execution Environment (SEE) specifications, DDR Processor chipset test criteria, and DDR Processor chipset certification procedures. For example, an approved chipset partner can integrate the DDR firmware into a Chipset Certification Device (CCD) for approved or certified processor(s) (e.g., chipsets that have been approved or certified under an AWSP Chipset Certification Program). In some embodiments, the CCD includes an approved chipset partner chipset Board Support Package (BSP) for a smart phone/feature phone device that includes the chipset submitted to the AWSP Chipset Certification Program. In some embodiments, the CCD includes a smart phone/feature phone device that includes the Approved Chipset Partner chipset submitted to the AWSP Chipset Certification Program. In some embodiments, various Operating Systems (OSs) are supported (e.g., Linux, Android, Apple, Microsoft, Palm/HP, Symbian, and/or various other operating systems and/or platforms).

In some embodiments, enhanced functionality includes integration of a Service Processor (SP) kernel program and application. In some embodiments, in addition to the DDR firmware, a Service Processor Software Developers Kit (SP SDK) is provided. In some embodiments, the SP SDK includes software and descriptive information for integrating the SP SDK kernel program and application software into a device OEM as described herein with respect to various embodiments. In some embodiments, an Approved Chipset Partner CCD connects to either Wireless Carrier's 3G (EVDO/UMTS) network or Wireless Carrier's 4G LTE network using a mutually agreeable WWAN wireless modem chipset that is certified for operation on Wireless Carrier's network.

DDR Processor Overview

In some embodiments, the DDR Processor is implemented within secure firmware embedded in either an applications processor unit (APU) or a modem processor unit (MPU). In some embodiments, the DDR Processor is provided as part of the device firmware build installed by an OEM at time of manufacture. In some embodiments, the DDR Processor monitors incoming and outgoing IP packets and gathers various statistics (e.g., Device Data Records (DDRs)). In some embodiments, a DDR is, in part, a record of the amount of data transmitted or service usage consumed along an IP flow. In some embodiments, an IP flow is specified by a source address, a destination address, a source port, a destination port, and a protocol type. In some embodiments, the secure device data record can also accompany the corresponding layer-7 classification information (e.g., domain names, application identifier, HTTP information, associative classification, and/or other information as

described herein) with an IP flow (e.g., source address, port address, destination address, destination port, and protocol) received from the Service Processor. In some embodiments, DDRs also include other types of classification for network service usage, as described herein with respect to various embodiments. In some embodiments, DDRs also include various statistics related to or based on network service usage, as described herein with respect to various embodiments. In some embodiments, DDRs are used in 2G, 3G, and 4G wireless networks in both home and roaming network conditions for various service usage accounting, access control, and service policy enforcement verification functions, as described herein with respect to various embodiments.

FIG. **1** illustrates a high level diagram of an advanced wireless service platform end-to-end DDR reporting and processing system in accordance with some embodiments. In FIG. **1**, four DDR implementation options are shown for securely embedding a DDR processor (e.g., DDR processor firmware and/or functionality) into an APU chipset or an MPU chipset. Each of these three options is described at a high level below and in more detail in following sections.

In some embodiments, a wireless communication device includes a DDR processor **114** in a secure execution environment. In some embodiments, the DDR processor **114** includes a DDR generator function (e.g., a function for generating secure DDRs, which can be reported to another element/function in the device and/or to a network element/function, such as a service controller **122**) as described herein with respect to various embodiments. Various architectures are provided for implementing the DDR Processor in a secure execution environment.

Device architecture **101** includes the DDR processor **114** in a zone of data path security **140** (e.g., located in an application/general processor unit (APU)) as shown. Application programs **130** are monitored (e.g., service usage based monitoring) using a service processor application program **112**. Kernel programs **132** are monitored using a service processor kernel program **113**. An operating system (OS) **134** resides above a network stack **136** for network access, which is monitored by the DDR processor **114** for any network access through a modem bus driver and physical bus **142**. As shown, 3G or 4G wireless network access is provided through a 3G or 4G modem **150** to a 3G or 4G networks **104**, respectively. This device architecture and similar device architectures are described herein in more detail below.

Device architecture **102** includes the DDR processor **114** in a zone of data path security **143** (e.g., located in a modem processor unit (MPU)) as shown. Device architecture **102** is similar to device architecture **101** except that in device architecture **102** the zone of data path security **143** is located in 3G or 4G modem **151**. Network communication via the modem **151** through modem bus driver and physical bus **149** and modem I/O **156** is monitored using the DDR processor **114** for any network access through a modem data path and signal processing **154**. This device architecture and similar device architectures are described herein in more detail below.

Device architecture **103** includes the DDR processor **114** in a zone of data path security **145** (e.g., located in an APU or another processor/memory, such as a SIM card)) as shown. Device architecture **103** is similar to device architecture **101** except that in device architecture **103** the APU's modem bus driver and physical bus does not need to be in a secure zone and instead a data path security verifier **152** is included in the zone of data path security **147** in the MPU to restrict network access to only traffic that has been monitored by the DDR Processor **114** within APU. This device architecture and similar device architectures are described herein in more detail below.

Device architecture **103**A includes the DDR processor **114** in a zone of data path security **918** (e.g., located SIM **913**) as shown. Device architecture **103**A is similar to device architectures **101** and **102**, except that in device architecture **103**A, as in device architecture **103**, there are two zones of data path security. Zone of data path security **143** is located in 3G or 4G modem **151**, and zone of data path security **918** is located on SIM **913**. In device architecture **103**A, modem bus driver and physical bus **149** does not need to be in a secure zone, and instead data path security verifier **152** is included in zone of data path security **143** in the MPU to restrict network access to only traffic that has been monitored by the DDR Processor **114** within SIM **913**. This device architecture and similar device architectures are described herein in more detail below. Device architecture **103**A enables a carrier to have complete control of the DDR processor functionalities, because the SIM considered in the industry to be a "carrier-owned" entity on the device.

As would be appreciated by a person having ordinary skill in the art, DDR processor **114** may be embedded in a secure zone of any other functional processor with a companion MPU to enforce network access. Such functional processors in which DDR processor **114** may be embedded include, for example, video processors, audio processors, display processors, location (e.g., GPS) processors, and other special-purpose processors as well as general-purpose processors such as digital signal processors (DSPs), microprocessors, etc.

In some embodiments, a Service Controller **122** is provided as shown. In some embodiments, Service Controller **122** is provided as an AWSP network server cloud system. In some embodiments, Service Controller **122** is provided as an AWSP network server cloud system that is used to perform one or more of the following: collect device service usage reports; manage certain aspects of device based network service policy; ascertain the Network Busy State (NBS) for various base stations on the network (e.g., wireless network(s)); manage the user notification and service plan selection UI processes configured on the device(s) (e.g., wireless communication device(s)); and manage certain aspects of service fraud detection. In some embodiments, the service controller **122** includes a secure DDR processing, usage reconciliation, and fraud detection function **124** as shown. In some embodiments, the service controller **122** communicates monitored service usage (e.g., reconciled service usage based on processed and reconciled secure DDRs) to network service usage reporting systems **180**. In some embodiments, the reported service usage is aggregated and communicated to network billing systems **190** (e.g., for billing for the reported service usage).

In some embodiments, the Service Controller **122** communicates with various device-based elements of the AWSP system. In some embodiments, the Service Controller **122** communicates with various device-based elements of the AWSP system, including the following: the DDR Processor **114** and a Service Processor. In some embodiments, the Service Processor **112** includes an application Service Processor **112** (e.g., an application space or framework space program) and a kernel service processor **113** (e.g., a kernel space or driver space program). In some embodiments, the application service processor **112** and the kernel service processor **113** execute or perform in an OS partition on an application processor unit (APU) of a device (e.g., a wireless

communication device). In some embodiments, the Service Processor is not generally in a secure execution area.

In some embodiments, the Service Processor performs various functions for the carrier network including collecting Network Busy State (NB S) information, service usage classification and reporting, certain network service policy enforcement functions, and/or certain user notification functions and roaming access policy enforcement functions, as described herein with respect to various embodiments. In some embodiments, the Service Processor also logs and reports device service usage information that assists a carrier (e.g., a service provider for a wireless network service or other services) in determining how to provide users with optimized services, information, and/or content.

In some embodiments, the DDR Processor **114** communicates DDRs to the Service Controller **122**. In some embodiments, the DDR Processor **114** communicates DDRs to the Service Controller **122** via the Internet, a carrier network, and/or other network. In some embodiments, the DDR Processor **114** does not send DDRs directly to the Service Controller **122**, but instead the DDR Processor **114** forwards the DDRs to the Service Processor. The Service Processor then forwards or relays the DDRs to the Service Controller **122** and, in some embodiments, along with additional service usage reports and/or other service policy management and user notification communications generated by or received by the Service Processor.

For example, the APU OS execution environment is generally not considered secure or trusted even though the Service Processor can be protected by the OS and/or other security elements within the system. In addition, the network data path between the DDR Processor **114** to the Service Processor is generally not considered to be secure or trusted and neither is the data path between the Service Processor and the Service Controller **122**. Accordingly, in some embodiments, the DDR Processor **114** and the Service Controller **122** use cryptographic techniques to provide a secure link from the DDR Processor **114** to the Service Controller **122**. In some embodiments, the DDR Processor **144** is considered secure and trusted based on various implementations and techniques as described herein with respect to various embodiments. In some embodiments, various techniques for securing the service usage monitoring and control performed by the DDR Processor **114** on a network data path, and securing the DDR reporting channel from the DDR Processor **114** to the Service Controller **122** are described herein with respect to various embodiments.

In some embodiments, a secure access controller function within the DDR Processor **114** is employed as described below to ensure that if the DDR flow is tampered with or blocked, then the device network access data path connection managed by the DDR Processor **114** is restricted to only those network destinations required to manage the DDR Processor **114** communication with the Service Controller **12**. In some embodiments, the access controller function within the DDR Processor **114** receives feedback from the Service Controller **122** to restrict access or allow full access. For example, the restricted access list (e.g., a list of host names, IP addresses, and/or other identifiers for an access list) can either be pre-provisioned within the DDR Processor SEE or configured through the secure path as described in more detail herein.

In some embodiments, a secure, reliable, and trusted transmission of DDRs from the DDR processor **114** is provided by DDR reporting techniques, including the following: (1) the DDR Processor firmware is securely loaded and executed in a Secure Execution Environment (SEE); (2) the data path between the DDR Processor to the wireless modem antenna connection (e.g., a 3G or 4G network modem antenna connection) is secured to prevent fraudulent software or firmware from forming data paths that circumvent the DDR Processor data path processing; (3) the DDRs transmitted from the DDR Processor **114** to the Service Controller **122** are integrity checked in a manner that protects them from being tampered with or replayed; and (4) an authentication process between the DDR Processor **114** and the Service Controller **122** combined with a set of unique DDR report sequence identifiers and authentication session keep alive timers are used to maintain and verify the secure connection between the DDR Processor **114** and the Service Controller **122**. For example, if the secure session or the flow of DDR records between the DDR Processor **114** and the Service Controller **122** are interrupted, then the secure access control function in the DDR Processor **114** can restrict access to the modem data path to the network destinations necessary to re-establish a securely authenticated session between the DDR Processor **114** and the Service Controller **122**.

In some embodiments, the DDR Processor **114** also includes a secure Network Busy State Monitor function (e.g., NBS Monitor) as similarly described herein with respect to various embodiments. In some embodiments, the NBS Monitor logs and reports various network and modem performance parameters and also computes and reports a measure of network congestion referred to herein as the Network Busy State (NBS). In some embodiments, the NBS is a measure that indicates the level of network congestion at a give base station sector over a given measurement time interval. In some embodiments, all of this information is included in a Network Busy State Report (NBSR) that is part of the DDR message reports sent to the Service Controller **122** via the Service Processor **112**.

Overview of Secure Image Programming, Secure Boot, Secure Execution, and Secure Firmware Update

In some embodiments, the DDR Processor system includes a dedicated Secure Execution Environment (SEE) within the Application Processor Unit (APU) or modem chipset. In some embodiments, the SEE provides for a secure, trusted generation of DDRs as described herein. The basic functionality of the SEE in accordance with some embodiments is described below.

In some embodiments, the SEE is a secure memory execution partition that cannot be accessed by any external program, bus, or device port. In some embodiments, the secure memory execution partition includes code space and data space. In some embodiments, a secure boot loader executes within the SEE. In some embodiments, the only other code images allowed to execute in the SEE are secure images, meaning digitally-signed images whose signature is verified by the secure boot loader. In some embodiments, at time of device manufacture, the secure boot loader is programmed into nonvolatile memory in the on-chip SEE. For example, the secure boot loader can fetch a secure image from nonvolatile memory and install it in the SEE in a trusted and secure manner. In some embodiments, the secure boot loader is the only element capable of loading an image into the SEE.

In some embodiments, the DDR Processor **114** is implemented as a secure image. Installation of the DDR Processor image into the SEE using the secure boot loader is described below. Other secure images can be similarly installed as will be apparent to one of ordinary skill in the art in view of the embodiments described herein.

In some embodiments, the DDR Processor image is digitally signed by the device OEM. For example, the secure boot loader can verify the signature using a boot loader verification key and reject the image if the signature is invalid. In some embodiments, the boot loader verification key is a 2048-bit RSA public key embedded within the secure boot loader image.

In some embodiments, the signed DDR Processor image is stored in on-chip nonvolatile memory. In some embodiments, the signed DDR Processor image is stored in off-chip nonvolatile memory (e.g., if the on-chip storage capacity of the chipsets is too constrained to store this image).

FIG. **2** illustrates a process for booting, executing, and updating the DDR firmware in accordance with some embodiments. As shown in FIG. **2**, at **210**, when the device boots, the Secure Boot Loader fetches the DDR Processor image from nonvolatile memory, installs it in the SEE, and executes it. In some embodiments, during installation, and prior to execution, the secure boot loader verifies the digital signature of the DDR Processor image using the boot loader verification key. If the signature is invalid, execution does not occur and an error message is sent to the Service Controller via the Service Processor, and the secure boot loader attempts to fall back to a previously stored image, as described herein with respect to various embodiments.

In some embodiments, the data path from the non-secure OS stack elements to the modem(s) being monitored and controlled by the DDR Processor must pass into the SEE and be made available to the DDR Processor, such as shown at **220** in FIG. **2**. Once the OS stack data destined for the modem is transferred into SEE memory, the secure DDR Processor program analyzes and acts on the data destined for the modem as described herein with respect to various embodiments. In some embodiments, the DDR Processor includes a secure data interface from the SEE to the modem data path such that there are not any data paths that can circumvent the SEE (e.g., to avoid detecting and/or monitoring by the DDR Processor). Examples of secure execution partition and data interface solutions include a trusted API, an ARM Trust Zone, an Intel Smart & Secure, or a custom solution or proprietary solution specific, such as from a chipset supplier for specific chipsets.

In some embodiments, a communication channel (e.g., a DDR mail box) provides communication between the DDR Processor program executing in the SEE to a Service Processor application program executing in the non-secure OS environment (e.g., application space or user space), such as shown at **230** in FIG. **2**. Example techniques for providing the DDR mailbox include shared memory using DMA channels, logical channels (e.g., endpoints) within the modem bus driver (e.g., USB interface) between the APU and MPU, and piggyback channels on top of an already exiting logical channel between the APU and MPU.

In some embodiments, the DDR Processor firmware image is updated, such as shown at **240** in FIG. **2**. In some embodiments, the DDR Processor firmware image is updated using OEM processes supported by the chipset supplier for over the air (OTA) and over the network (OTN) update(s) of the chipset nonvolatile memory firmware image provided to device OEMs. In some embodiments, the DDR Processor is stored along with other chipset secure firmware drivers loaded by the secure boot loader either during the initial power up cycle, upon exiting from power save state and/or any other times that the download can be performed in secure manner. In some embodiments, the DDR Processor requires enough nonvolatile memory space to accommodate at least two images, one image that is currently running and a new downloaded image (e.g., each image can be of a specified maximum size, such as 0.5 MB or another size limit). In some embodiments, the secure boot loader includes a firmware image switch to use the new image once the download is complete. For example, the image switch function can include a fallback system to switch back to the current image if the new image has an invalid signature, or if the new image is older than the current image as indicated by revision numbers included within each image. The current image can be retained at least until the new image has been accepted by the secure boot loader.

Overview of DDR Processor Implementation Embodiments

The DDR Processor can be provided using different configurations for secure embedded DDR firmware (e.g., in AWSP chipsets) including in an APU implementation, an MPU implementation, and a combined APU/MPU implementation as described herein in accordance with various embodiments. Those of ordinary skill in the art will also appreciate that similar and various other secure partition configurations for providing secure embedded DDR firmware can be provided in view of the various embodiments described herein.

In some embodiments, the DDR processor is provided using an integration into the APU chipset SEE and nonvolatile memory, such as an APU implementation shown in device architecture **101** in which the DDR processor **114** and a modem bus driver and physical bus **142** are implemented in the zone of data path security **140** as shown in FIG. **1**. The DDR Processor is securely implemented on the 2G, 3G, or 4G modem data path directly below the modem driver data path processing function and above the modem bus driver data path processing function (e.g., typically USB driver, SDIO driver, or similar bus driver function). For example, using this approach, the entire data path below the DDR Processor through the modem bus driver and through the 2G, 3G or 4G network modem can be secured to prevent data paths that circumvent the DDR Processor data path processing.

In some embodiments, the DDR processor is provided using an integration into the 2G, 3G, or 4G MPU chipset SEE and nonvolatile memory, such as an MPU implementation shown in device architecture **102** in which the DDR processor **114** and a modem data path and signal processing **154** are implemented in a zone of data path security **143** as shown in FIG. **1**. The DDR Processor is securely implemented on the 2G, 3G, or 4G modem data path just below the modem bus driver and logical channel interface. For example, using this approach, the entire data path below the DDR Processor to the 2G, 3G or 4G network is secured to prevent data paths that circumvent the DDR Processor data path processing.

In some embodiments, the DDR processor is provided using an integration into the APU chipset SEE and nonvolatile memory, such as an APU and MPU implementation shown in device architecture **103** in which the DDR processor **114** is implemented in the zone of data path security **145**, and a data path security verifier **152** and the modem data path and signal processing **154** are implemented in a zone of data path security **147** as shown in FIG. **1**. The DDR Processor is securely implemented on the 2G, 3G, or 4G modem data path somewhere below the OS stack and above the modem bus driver. For example, using this approach, rather than securing the entire data path below the DDR Processor through the modem bus driver and through the 2G, 3G, or 4G network modem, the data path between the DDR Processor and the modem wireless network access connection is secured by integrity-checking the data that

streams between the DDR Processor and a Data Path Security Verifier (DPSV) **152** function. Any data path information that is not properly accounted for and integrity-checked is not conducted to or from the wireless network connection. For example, this approach eliminates the need to secure APU firmware, hardware, and data path elements other than the DDR Processor itself

Embedded DDR Processor Implementation on an Application Processor

In some embodiments, embedding the DDR processor in an Application Processor Unit (APU) (e.g., smart phone APU or other wireless communication device APU) provides a single secure DDR Processor location in the wireless network data path (e.g., 2G/3G/4G wireless network data path or other device I/O connection or port) that provides for service usage monitoring and access control for multiple wireless modems. Also, the APU implementation approach can allow APU chipset suppliers who may not necessarily have WAN modem components or technology to implement solutions compliant with the various AWSP techniques described herein. Further, the APU implementation approach generally more easily allows for OTA and OTN firmware updates for APU implementations as described herein (e.g., which can be more complicated to provide in certain MPU implementations). Many disclosed embodiments describe DDR APU implementations where the DDR acts on communications flows through one or more wide area network networks, connections, or modems. As would be appreciated by one of ordinary skill in the art, the APU embodiments for a secure device data record processing system can also act on communications that flow over one or more additional I/O networks, connections, ports, or modems (e.g., a WiFi network, connection, port, or modem; a USB network, connection, port, or modem; an Ethernet network, connection, port, or modem; a Firewire network, connection, port, or modem; a Bluetooth network, connection, port, or modem; a near field communication (NFC) network, connection, port, or modem; or another I/O connection, port, or modem).

Referring to device architecture **101** as shown in FIG. **1**, the DDR Processor is embedded into the APU chipset SEE and nonvolatile memory as similarly described above. Along with the DDR Processor SEE, the secure data path environment, shown as the Zone of Data Path Security **140**, includes the DDR Processor **114** and the modem bus driver and physical bus **142**. For example, provided that the modem bus driver and the physical bus to the modem are secured against (e.g., or otherwise inaccessible to) fraudulent software or firmware attempting to circumvent the DDR Processor **114**, the modem itself (e.g., 3G modem or 4G modem **150**) need not be secured. In particular, the DDR Processor **114** is securely implemented on the 2G, 3G or 4G modem data path directly below the modem driver data path processing function and above the modem bus driver data path processing function (e.g., typically USB driver, SDIO driver or similar bus driver function). In some embodiments, the entire data path below the DDR Processor **114** through the modem bus driver and through the 2G, 3G or 4G modem is secured to prevent data paths that circumvent the DDR Processor data path processing. In some embodiments, all information communicated from the device over device network connection or I/O port via the data path processing function (e.g., typically a USB driver, an SDIO driver, an Ethernet driver, a Firewire driver, a WiFi driver, a Bluetooth driver, or a near field communication driver) is observed (and possibly processed to apply policy), classified, or reported on as it passes through the DDR Processor block. Accordingly, in some embodiments, the modem bus driver is either secured in the DDR SEE or in its own SEE, or the modem bus driver code and data path must be inaccessible to software or firmware on the APU that could circumvent the DDR Processor **114**.

FIG. **3** illustrates an architecture for a secure embedded DDR Processor in an APU implementation in accordance with some embodiments. In particular, FIG. **3** shows the major functional elements within an APU based solution in accordance with some embodiments, in which the DDR processor **114** resides in the APU's SEE together with other APU secure programs, and the DDR Processor's communication channel to the Service Processor application program **112** is via a shared mailbox (e.g., a shared memory). FIG. **3** also shows an interface to the non-volatile memory (e.g., for software downloads) with the presence of secure boot code to ensure that all secure codes are first digital signature verified before a download is considered complete. In some embodiments, the data path is a separate interface in which data frames are sent to the secure environment for the DDR processor to gain access and perform DDR usage measure in addition to controlling limited or unlimited network access.

Referring to FIG. **3**, an APU can be logically partitioned into APU chipset application programs **302**, APU chipset kernel programs **304**, and a secure execution environment (SEE) shown as APU secure execution environment **306**. The APU secure execution environment **306** communicates (e.g., using secure communication techniques, such as those described herein) with a network element/function (e.g., service controller **122** and/or other element(s)/function(s)). In some embodiments, secure program nonvolatile (NV) memory **340** includes OS/OEM secure device system program files **342**, secure DDR processor program files **346**, and APU secure device system program files **348** that can be fetched by the secure boot loader residing in the APU secure execution environment (SEE) **306** to be downloaded in to the SEE memory before code execution can take place as described herein.

The APU chipset application programs **302** include user application programs **130**, service processor application program **112** (e.g., for performing various service processor functions that need not be implemented in the kernel, as described herein), and OEM application programs **310**. The APU chipset kernel programs **304** include OEM kernel program **312**, service processor kernel program **113** e.g., for performing various service processor functions that are preferably implemented in the kernel, as described herein), APU system kernel program **314**, and APU device drivers and other BSP kernel programs **316**. As also shown, OS **134** includes user/application space and kernel space implemented portions as would be apparent to one of ordinary skill in the art. Network access (e.g., 3G or 4G wireless network access) is communicated through APU network stack device driver **318**, which resides in kernel space **304** as shown.

The APU SEE **306** includes a secure execution memory **322** for executing/storing secure DDR processor programs **326**, APU secure device system programs (e.g., modem bus driver, modem driver) **328**, and OS/OEM secure device system programs **330**. The APU SEE **306** also includes a program signature verifier **332** for verifying the secure DDR processor programs **326** and/or other secure programs in the secure execution memory **322** as described herein. The APU SEE **306** also includes NV memory I/O **334** as shown. The APU SEE **306** also includes a secure execution boot loader and updater (e.g., secure on-board NVRAM) **336** for imple-

menting a secure execution boot processes and secure update processes as described herein.

In some embodiments, the network data path **324** for any user or kernel mode applications or services are communicated from the APU networking stack device driver **318** and monitored using secure DDR processor programs **326**.

As further described herein, secure DDR processor programs **326** communicate to the service processor application program **112** using a DDR mailbox function and communication channel as shown via DDR mailbox data **320**. In some embodiments, the DDR mailbox function provides a secure communication channel using various techniques as described herein. In some embodiments, the DDR mailbox function is used to communicate secure DDRs generated using secure DDR processor programs **326** for monitored network service usage to the service processor application program **112**. In some embodiments, the service processor application program **112** communicates the secure DDRs to a network element/function, such as the service controller **122**. In some embodiments, the service processor application program **112** communicates the secure DDRs with a service processor report (e.g., which includes device based micro-CDRs/uCDRs based on monitored service usage based on service processor application programs **112** and/or service processor kernel programs **113**, such as application based monitoring/layer-7 or application layer based monitoring, as described herein) to a network element/function, such as the service controller **122**. In some embodiments, the service processor application program **112** communicates the secure DDRs with a service processor report for overlapping and/or common time periods/intervals (e.g., which facilitates reconciliation of device assisted service usage monitoring based on the two DAS assisted service usage measures by the service controller or other network elements/functions).

FIG. **4** illustrates another architecture for a secure embedded DDR Processor in an APU implementation along with a modem bus driver in accordance with some embodiments. In particular, FIG. **4** shows more detail on how DDR Processor **114** can be implemented in an APU secure operating environment along with a modem bus driver **428** (e.g., 2G, 3G, or 4G modem bus driver). DDR Processor **114** monitors IP packets going to and from the modem bus driver **428** (e.g. USB driver/controller), which provide for wireless network access via a secure data path **430** to a modem bus **432** for wireless access using a 2G/3G/4G modem **440** as shown. In some embodiments, DDR Processor **114** monitors IP packets going to and from device I/O driver (e.g., typically a USB driver, a 2G/3G/4G modem driver, an SDIO driver, an Ethernet driver, a Firewire driver, a WiFi driver, a Bluetooth driver, or a near field communication driver), which provides for device I/O access via a data path with secure DDR data path processing or monitoring.

As similarly described above, the secure execution boot loader and updater **336** loads DDR Processor **114** and modem bus driver images from nonvolatile (NV) memory **334** into the execution memory within SEE, shown as DDR secure execution memory **420**, to execute (e.g., after code signature verification using secure program signature verifier **332**). DDR Processor **114** and modem bus driver image and other secure images are all part of secure boot load to be signature verified before such are executed.

As shown, the DDR Processor sits in line with the 2G, 3G or 4G modem data path and all traffic between the OS stack and the 2G, 3G or 4G network is monitored by DDR Processor **114**. DDR Processor OS stack data path interface **424** is provided that bridges between DDR secure execution environment (SEE) **420** and the unsecure OS stack in the kernel. Also, DDR Processor modem data path interface **426** is provided that similarly connects DDR Processor **114** to the modem data path fed by modem bus driver **428**. In some embodiments, DDR Processor **114**, which is provided in line on the data path and not simply a clone/monitor/drop function, also implements an access controller function to maintain the integrity of network access, for example, in the event that the DDR reports are tampered with or blocked from reaching the service controller **122** or DDR Processor **114** is tampered with, or Service Processor **112** is tampered with, as described herein.

As also shown, DDR processor mailbox interface **422** is provided that implements a mailbox function for passing DDR mailbox data **320** between secure DDR SEE **420** and unsecure Service Processor application **112**. As would be apparent to one of ordinary skill in the art in view of the various embodiments described herein, the DDR mailbox function can be implemented in a variety of ways.

In some embodiments, the DDR Processor and USB driver execute in a secure environment on the application processor chipset, such as DDR secure execution memory **420**. In some embodiments, the secure environment ensures no unauthorized ability to replace or modify the DDR Processor code or modem bus driver/controller code (e.g., a USB driver/controller or another device I/O driver/controller, such as a 2G/3G/4G modem driver/controller, an SDIO driver/controller, an Ethernet driver/controller, a Firewire driver/controller, a WiFi driver/controller, a Bluetooth driver/controller, or a near field communication driver/controller). In some embodiments, the secure environment also ensures that the data path from the DDR Processor to the physical modem bus driver (e.g., USB port, Ethernet port, Firewire port, WiFi port, Bluetooth port, NFC port, or another I/O bus port) is isolated from firmware outside the secure environment. That is, no firmware outside the secure environment has the ability to affect the accurate gathering of statistics by the DDR Processor. In some embodiments, the secure environment further ensures that there is no ability for code other than the DDR Processor to access sensitive crypto storage, such as keys. For example, this can include shielding sensitive storage from debug monitors and/or other monitoring/access activities or techniques. As would also be apparent to one of ordinary skill in the art, APU firmware, not just the DDR Processor, must be secured and not include bugs or vulnerabilities that can be exploited to allow for unauthorized access. For example, a common attack is buffer overflow, in which an attacker chooses inputs that cause an unchecked buffer to exceed its bounds, resulting in unintended behavior that the attacker can exploit.

There are various examples of APU chipset SEE Implementation techniques that can be used to meet these requirements as described above. For example, a conventional CPU with upgradeable firmware (e.g., including the DDR Processor) can be provided. The firmware can be stored in nonvolatile (NV) memory, or can be stored in flash memory in which the flash memory can be reprogrammed/updated with new or upgraded firmware. The firmware can be installed at time of manufacture and by design provides a compliant secure environment. Rigorous quality-assurance testing is required to ensure that bugs are unlikely to provide a means for compromising the secure environment. A new firmware image can be accepted for installation only if it has a valid digital signature. Version control checking can be included to prevent rollback to older versions. The firmware that validates the signature and version resides in firmware that can also be upgradeable. As another example, a security

partitioned CPU can be provided, such as an ARM Trustzone or Intel Smart & Secure (e.g., or another suitable substitute including potentially supplier custom security environment CPU partitioning techniques). The DDR Processor, modem bus driver (e.g., a USB driver/controller or another device I/O driver/controller such as a 2G/3G/4G modem driver/controller, an SDIO driver/controller, an Ethernet driver/controller, a Firewire driver/controller, a WiFi driver/controller, a Bluetooth driver/controller, or a near field communication driver/controller), and any intervening code can execute in the secure partition, such as Trustzone's (e.g., or Smart & Secure's) secure mode. A secure boot procedure enforces the requirement that the DDR Processor, modem bus driver (e.g., a USB driver/controller or another device I/O driver/controller such as a 2G/3G/4G modem driver/controller, an SDIO driver/controller, an Ethernet driver/controller, a Firewire driver/controller, a WiFi driver/controller, a Bluetooth driver/controller, or a near field communication driver/controller), and intervening code can be included in a digitally signed, version-controlled code image. In such approaches, hardware firewalls can shield sensitive crypto storage from normal mode firmware. Also, the hardware firewalls ensure that normal mode firmware cannot tamper with the data path between the DDR Processor and the physical modem bus driver (e.g., USB port), thus, preventing interference with the gathering of service usage measure data and/or statistics as described herein.

FIG. **5** illustrates another architecture for a secure embedded DDR Processor in an APU implementation along with a modem bus driver in accordance with some embodiments. In particular, FIG. **5** is similar to FIG. **4**, except that as shown in FIG. **5**, APU Stack Driver for 2G/3G or 4G Modem **410** is located in the DDR secure execution memory **420** instead of the APU kernel space **404**.

Embedded DDR Processor Implementation on a Modem Processor

In some embodiments, in an MPU implementation, the DDR Processor resides in the modem processor with other secure modem data path processing code and hardware functions. For example, in an MPU-based secure DDR Processor implementation, once the data path below the modem bus driver interface is secured, it is relatively difficult to hack the device to create a data path that reaches the network by circumventing the DDR Processor. Also, for some MPU chipset families, it can be more straightforward to implement a secure execution environment, secure boot loader, and secure nonvolatile memory as compared to implementing the same functions in some APU families that do not have standard hardware security partition features, such as ARM Trust Zone and Intel Smart & Secure. Further, an MPU implementation can have less interaction with the OS kernel builds than in the case of an APU implementation. In some embodiments with an MPU implementation, DDR Processor **114** resides in a wireless wide area network modem such as a 2G, 3G or 4G modem, or in a local area or personal area modem such as a USB modem, an Ethernet modem, a Firewire modem, a WiFi modem, a Bluetooth modem, an NFC modem, or another I/O modem. Many of the described embodiments are for MPU implementations with wireless wide area network modem, but, as would be appreciated by one of ordinary skill in the art, other variations involving other I/O device modems are possible without departing from the scope of the disclosure.

However, it should also be observed that in a MPU DDR Processor implementation, the modem processor environment may not have a CPU with the same performance and secure execution memory space as an APU solution. This apparent disadvantage can be mitigated by designing and optimizing the DDR Processor firmware so that the code memory size is small and the CPU performance requirement is appropriate for a typically relatively low powered modem processor chipset CPUs. Also, as mentioned above, the OTA and OTN update process may be more complex than that achieved by certain APU chipset suppliers and their OEMs.

FIG. **6** illustrates an architecture for a secure embedded DDR Processor in an MPU implementation in accordance with some embodiments. In particular, FIG. **6** shows an MPU implementation that includes an embedded DDR Processor and modem data path from the DDR Processor to the network in the zone of data path security. In this approach, the DDR Processor **114** is embedded into secure execution environment (SEE) **604** and secure execution memory **630** of the modem chipset (e.g., 3G or 4G MPU chipset). As shown, to ensure that fraudulent software or firmware cannot circumvent the DDR Processor, the Zone of Data Path Security includes the DDR Processor **114** along with the modem data path processing and the modem signal processing that occurs between the DDR Processor and the antenna. In some embodiments, the DDR Processor **114** is securely implemented on the 3G or 4G modem data path just below the modem bus driver **610** and logical channel interface and the entire data path below the DDR Processor **114** to the 3G or 4G network is secured to prevent data paths that circumvent the DDR Processor data path processing.

Similar to the APU based approach discussed above, FIG. **6** shows the major functional blocks within a modem based solution in which the DDR Processor **114** resides in the modem's SEE monitor service usage via network data path **632**, along with other secure modem code **634**, below-DDR modem networking protocol code **636**, and below-DDR modem data path processing **638**, and the DDR processor's communication channel to the Service Processor application program is via a shared mailbox (e.g., serviced by a USB endpoint). This interface can either use a separate logical communication channel or be piggybacked on top of an already existing logical communication channel between APU and MPU. In some embodiments, the recipient of the DDR mailbox data **320** is the Service Processor Application code.

As also shown in FIG. **6**, the interface to the non-volatile memory (e.g., for software/firmware downloads/updates) with the presence of secure boot code ensures that all secure codes are first digital signature verified before download is considered complete. The data path is a separate interface in which data frames are sent to the secure environment for the DDR processor to gain access and perform DDR usage measure in addition to controlling limited or unlimited network access.

Modem chipset unsecure execution environment **602** includes a modem bus communication driver **610**. In some embodiments, a logical communication channel for modem data path traffic **622** and above DDR modem data path processing **624** is also provided. In some embodiments, a logical communication channel for modem control settings and status reports **612**, modem status data **614**, modem control data **616**, modem diagnostics data **618**, and other unsecured modem functions **620**.

FIG. **7** illustrates another architecture for a secure embedded DDR Processor in an MPU implementation in accordance with some embodiments. In particular, FIG. **7** shows how the DDR Processor **114** is implemented in an MPU secure operating environment where the data path through the 3G or 4G modem network processing and signal processing is secured up to the antenna from access from

software or firmware other than the DDR Processor. In some embodiments, the secure boot loader process operates as similarly described above.

As shown, APU chipset application programs **702**, which includes DDR mailbox data **710** communicated to the service processor application program **112** as similarly described herein. APU chipset kernel programs **704** includes service processor kernel program **113** along with APU stack interface for 3G/4G modem **712**, APU stack interface for other modems **714**, and 3G or 4G modem bus driver **716** for communication via modem bus **718** to 3G or 4G modem bus driver **722** of modem chipset unsecure execution environment **706** as shown.

In some embodiments, the DDR Processor **114** is in line with the data path allowing for secure network/service usage measure and/or access control as similarly described herein with respect to various embodiments. In some embodiments, a DDR Processor OS stack data interface (IF) **728** is provided that bridges between the DDR secure execution environment (SEE) and the (potentially) unsecure modem bus driver interface **722** in modem chipset unsecure execution environment **706**. As also shown, a DDR Processor modem data path interface **730** is provided that similarly connects the DDR Processor **114** to the modem data path processing and the modem signal processing **740** that occurs between the DDR and the antenna. As described herein, the DDR is in line on the data path and is not simply a clone/monitor/drop function, as the DDR Processor also implement an access controller function in accordance with some embodiments to maintain the integrity of network access in the event that the DDR reports are tampered with or blocked from reaching the Service Controller, or the DDR Processor is tampered with, or the Service Processor is tampered with.

As also shown, a mailbox function is provided that passes data between the secure DDR SEE **725** and the unsecure Service Processor application program **112**. In particular, a DDR Processor mailbox interface (IF) **724** is in communication with a DDR mailbox **720**, which is located in the modem chipset unsecure execution environment **706**. DDR mailbox data **710** is shown as provided to the unsecure Service Processor application program **112**, which is provided through the modem communication path via the modem bus driver **722** and the modem bus **718** as shown. The DDR Processor mailbox interface (IF) **724** is in communication with the DDR Processor **114** and is located in the DDR SEE **725**. As would be apparent to one of ordinary skill in the art in view of the various embodiments described herein, the mailbox function can be implemented in a variety of ways. As similarly described above with respect to the various APU based embodiments, in accordance with some embodiments, the secure region is inclusive of all data path processing steps below the DDR Processor, and there is not any data path through the modem to the network that circumvents the DDR Processor.

In some embodiments, the DDR Processor executes in a secure environment in the MPU based embodiments, as similarly described above with respect to the APU based embodiments. In some embodiments, the secure environment ensures no unauthorized ability to replace or modify the DDR Processor code. In some embodiments, the secure environment also ensures that the data path from the DDR Processor to the antenna is isolated from firmware outside the secure environment. That is, no firmware outside the secure environment has the ability to affect the accurate gathering of statistics by the DDR Processor. In some embodiments, the secure environment further ensures that there is no ability for code other than the DDR Processor to access sensitive crypto storage, such as keys. For example, this can include shielding sensitive storage from debug monitors and/or other monitoring/access activities or techniques. As would also be apparent to one of ordinary skill in the art, MPU firmware, not just the DDR Processor, must be secured and not include bugs or vulnerabilities that can be exploited to allow for unauthorized access. For example, a common attack is buffer overflow, in which an attacker chooses inputs that cause an unchecked buffer to exceed its bounds, resulting in unintended behavior that the attacker can exploit.

Examples of secure execution environment (SEE) implementations in the MPU embodiments include the examples similarly discussed above for various secure execution environment (SEE) implementations in the APU embodiments.

Embedded DDR Processor Implementation on an Application Processor Combined with a Data Path Security Verifier on a Modem Processor

In some embodiments, the DDR Processor is embedded in a SEE APU chipset, and a Data Path Security Verifier (DPSV) is embedded in the MPU chipset, such as shown in device architecture **103** of FIG. **1**. For example, the DPSV can use cryptographic techniques to achieve a secure and trusted data path between the secure DDR Processor and the modem network antenna connection. This prevents a data connection between fraudulent software or firmware and the network without the need to secure the modem bus, the physical modem bus, and the modem data path elements above the DPSV element. By establishing a secure communication channel between the DDR Processor and the DPSV, a secure channel binding is created so that only network data path flows that are securely processed by the DDR Processor can reach the 3G or 4G modem connection to the wireless access network even if fraudulent software or firmware circumvents the DDR Processor by successfully gaining access to the modem bus interface. In the event that fraudulent software or firmware circumvents the DDR Processor and communicates intended unsecured data path information with the modem, the DPSV blocks the network data paths that are not processed and cryptographically secured by the DDR Processor.

FIG. **8** illustrates an architecture for a secure embedded DDR Processor in an APU and a Data Path Security Verifier (DPSV) in an MPU implementation in accordance with some embodiments. In particular, as shown in FIG. **8**, the DDR Processor **114** is embedded into the APU chipset SEE, and a second companion firmware image referred to herein as the Data Path Security Verifier (DPSV) **836** is embedded into the MPU chipset SEE (e.g., a 3G or 4G MPU chipset SEE). As also shown, to ensure that fraudulent software or firmware cannot circumvent the DDR Processor, there are two zones of data path security, one encompassing only the DDR Processor and the second one that includes the DPSV along with the modem data path processing and the modem signal processing that occurs between the DDR and the antenna (e.g., this second zone of data path security is similar to that of a modem-only implementation of the DDR Processor).

As mentioned above, this approach does not require securing the APU 3G or 4G modem bus driver and physical bus. For example, some vendors and/or chipset suppliers (e.g., AWSP APU chipset suppliers) may consider it easier to create two firmware images and two zones of data path security rather than securing the data path between the DDR Processor SEE and the modem antenna connection. As compared to the APU implementation based approach, the

firmware for the APU is somewhat simplified and the security design work involved with securing the modem bus driver and physical bus can be eliminated. As compared to MPU implementation based approach, the modem firmware is also simplified. For example, in some APU chipset architectures, it may be difficult to secure the data path from the DDR Processor through the modem bus driver, the modem physical bus, and the modem itself. Also, in some MPU chipsets, as similarly discussed above, there may be a need to simplify or reduce the size of the secure firmware program image required on the MPU. Simpler and smaller firmware can reduce the frequency of required updates or perhaps eliminate them altogether. The APU DDR Processor and MPU DPSV implementation approach described herein reduces the firmware required on the MPU down to the DPSV. This allows more complex data path processing by the DDR Processor to be implemented on the APU, in which (i) secure firmware execution memory is typically larger and CPU performance is typically higher, and (ii) the firmware update system is typically more capable and more flexible. However, there are also drawbacks with the APU DDR Processor and MPU DPSV implementation approach. The primary drawback is that firmware generally must be embedded in both the wireless network chipset (MPU) and the device Application Processor (APU) chipset.

As shown in FIG. **8**, a first SEE **810** is implemented on the APU chipset, which includes the DDR Processor **114** for securely monitoring communications from APU stack driver for 2G/3G/4G modem **806**, using OS stack data path interface and/or modem data path interface **818** as similarly described herein. A second SEE **832** is implemented on the MPU chipset, which includes the Data Path Security Verification (DPSV) program **836**. The DPSV **836** sits on the data path for the modem as shown. For example, the DPSV function can be quite simple: the DPSV **836** only passes data path information that is processed and acknowledged by the DDR Processor **114**. The DPSV **836** is bound to the DDR Processor **114** so that it knows the secret session key of the DDR processor data path and can receive acknowledgements from the DDR Processor **114**. Various techniques for how the DDR Processor **114** binds a secure data path channel to the DPSV **836**, and how the DPSV **836** ensures that all 3G or 4G modem network service usage is being properly monitored and processed, is provided herein.

Referring to APU SEE **810**, a program signature verifier **820**, nonvolatile memory I/O **822**, and secure execution boot loader and updater **824** as similarly described herein with respect to various embodiments. The APU SEE **810** also includes a DDR secure execution memory **812**. The DDR secure execution memory **812** includes the DDR processor **114** for monitoring the data path through OS stack data path interface **816** and modem data path interface **818** for data path communications via modem bus driver **826** to modem bus **818** as shown. The DDR secure execution memory **812** also includes a DDR processor mailbox interface for providing DDR mailbox data **810** from DDR processor **114** to service processor application program **112** as shown and as similarly described herein. Similarly, the DPSV **836** uses the DPSV mailbox interface **842** as a communication channel to authenticate the DDR processor **114** and establish a secret session key to be used for message integrity check between the two. Various techniques for implementing the security binding between DDR Processor **114** and DPSV **836** are described herein.

In some embodiments, the DDR Processor executes in a secure environment in the APU based embodiments, as similarly described above with respect to the APU based embodiments. In some embodiments, the secure environment ensures no unauthorized ability to replace or modify the DDR Processor code. In some embodiments, the secure environment further ensures that there is no ability for code other than the DDR Processor to access sensitive crypto storage, such as keys. For example, this can include shielding sensitive storage from debug monitors and/or other monitoring/access activities or techniques. As would also be apparent to one of ordinary skill in the art, APU firmware, not just the DDR Processor, must be secured and not include bugs or vulnerabilities that can be exploited to allow for unauthorized access. For example, a common attack is buffer overflow, in which an attacker chooses inputs that cause an unchecked buffer to exceed its bounds, resulting in unintended behavior that the attacker can exploit.

Similarly, in some embodiments, the DPSV executes in a secure environment. In some embodiments, the secure environment ensures no unauthorized ability to replace or modify the DPSV code. In some embodiments, the secure environment further ensures that there is no ability for code other than the DPSV to access sensitive crypto storage, such as keys. In some embodiments, the secure environment further ensures that there is no ability for any code to interfere with the proper crypto functions of the DPSV or communications between the DPSV and the DDR Processor. For example, this can include shielding sensitive storage from debug monitors and/or other monitoring/access activities or techniques. As would also be apparent to one of ordinary skill in the art, MPU firmware, not just the DPSV, must be secured and not include bugs or vulnerabilities that can be exploited to allow for unauthorized access. For example, a common attack is buffer overflow, in which an attacker chooses inputs that cause an unchecked buffer to exceed its bounds, resulting in unintended behavior that the attacker can exploit.

In some embodiments, the APU includes a Data Path Processor (DPP) that includes the DDR Processor function, which is secured in an APU SEE as described herein. In some embodiments, the APU DPP also includes other service monitoring, control, and notification functions. In some embodiments, the modem includes a Data Path Security Verifier (DPSV) that secures the path between the APU DPP and the modem network data path so that only the DPP can transmit over the modem even if other software, firmware, buses, or ports have access to the modem. In some embodiments, the modem DPSV is bound to the APU DPP by one or more of the techniques described herein and/or similar or other techniques as would be apparent to one of ordinary skill in the art in view of the various embodiments described herein. For example, the APU DPP can be provided in a secured data path to the modem network connection that cannot be circumvented by software, firmware, buses, or ports on the device. This can be a hardwired data path via hardware design or a data path secured with a secure firmware or software execution environment for all the data path elements below the APU DPP. The APU DPP and modem exchange public keys and/or digital certificates and then execute a key exchange process to authenticate each other which results in a secret shared session key to be used as the basis for message integrity checking.

Once the secret shared session key is established between APU DPP and DSPV, the APU DPP uses the session key to append an integrity check on each frame to be transmitted, and the modem uses the session key to validate the integrity check. The modem only allows frames that have a valid integrity check to be transmitted, and it blocks frames that do not include a valid integrity check, meaning that only

frames that were processed by the APU DPP get transmitted. Similarly, the modem DPSV uses the session key to append an integrity check to each received frame, and the APU DPP uses the session to validate the integrity check before it is sent to the higher layer (e.g., application layer, etc.).

In some embodiments, modem downstream data path messages between DPSV and DPP are sequenced. In some embodiments, APU DPP upstream messages include downstream sequence information so that modem DPSV can confirm that APU DPP is receiving all downstream packets, and if not, then the modem DPSV can inform the APU DPP, inform the Service Controller, and/or take action such as restricting access and/or other appropriate actions.

In some embodiments, the APU DPP generates secure DDRs and communicates the secure DDRs to the Service Controller in a sequenced and secure manner as described herein with respect to various embodiments.

In some embodiments, the Service Processor application and/or Service Processor kernel program informs the APU DPP as to which sockets/flows belong to which applications (e.g., can be or should be associated with which applications for application based service usage monitoring, billing, and/or control) so that the APU DPP knows which application is generating or receiving traffic in order to assist in application classification tag for charging, traffic control, and/or user notification policies.

In some embodiments, the APU DPP performs a variety of functions. In some embodiments, the APU DPP can perform DDR Processor functions. The APU DPP can perform any or all of the service monitoring functions of the Charging Agent (CA) and/or Policy Decision Agent (PDA). The APU DPP can count all network traffic, and in some examples, classifying traffic by application and/or destination, NBS, time of day, active network, and/or various other criteria as described herein. The APU DPP can generate charging records. The APU DPP can communicate charging records to the Service Controller (e.g., or another network charging function) and/or device notification UI.

In some embodiments, the APU DPP performs access controller functions. For example, the APU DPP can instruct the service processor application and/or kernel program to either allow or block/kill or background an application or destination. The service processor application and/or kernel program can either allow/block or background an application by manipulating the application access to the network or by intercepting the application program boot/start sequence, or from suspending/resuming the application. The service processor application and/or kernel program can perform the intercept functions by reprogramming or intercepting application management functions in the OS (e.g., such as the Android activity manager and/or the service manager functions). The APU DPP either instructs service processor application/kernel program to control application and/or traffic, or controls traffic directly in the DPP. The APU DPP can perform policy enforcement functions as described herein with respect to various embodiments.

In some embodiments, the APU DPP can perform NBS monitor functions and/or reporting functions. For example, the APU DPP can detect NBS, modem performance parameters, network assets involved in link, and/or geo-location information.

In some embodiments, the APU DPP obtains network time from network with "secure" ping-loop system to verify that network time stamp is not intercepted and delayed. For example, the APU DPP can either have a local reliable clock or can perform a ping-loop each time a report is started and/or stopped.

Examples of secure execution environment (SEE) implementations in the APU DDR Processor and MPU DPSV embodiments include the examples similarly discussed above for various secure execution environment (SEE) implementations in the APU embodiments. Specific examples are also listed below. Example commercially available APUs include the following: Intel Atom (e.g., Z5xx, Z6xx, D4xx, D5xx series) based solutions with Intel Trusted Execution Technology including TPM support; and ARM based solutions with ARM Trusted Zone Architecture. Example APU specification requirements can also include: common hardware security blocks (e.g., AES, DES, RSA, Diffie-Hellman, SHA, and a random generator). Example commercially available MPUs include the following: EVDO chipset based solutions (e.g., ARM 11-based CPU architecture, including ARM Trusted Zone Architecture with many common hardware crypto blocks); HSPA chipset based solutions (e.g., Snapdragon/ARM based CPU architecture, including ARM Trusted Zone Architecture with many common hardware crypto blocks); and LTE chipset based solutions (e.g., Snapdragon/ARM based CPU architecture, including ARM Trusted Zone Architecture with many common hardware crypto blocks).

FIG. **9** illustrates an architecture for a secure embedded DDR Processor in a Subscriber Identity Module (SIM) and a Data Path Security Verifier (DPSV) in an MPU implementation in accordance with some embodiments. In particular, as shown in FIG. **9**, the DDR Processor **114** is embedded a SIM SEE **918**, and the Data Path Security Verifier (DPSV) **936** is embedded into the MPU chipset SEE **932** (e.g., a 3G or 4G MPU chipset SEE). Data communications from the APU, such as those similarly described herein including the mailbox function, communicate using the SIM bus driver **911** using modem and SIM bus **912** as shown.

As shown in FIG. **9**, a first SEE **918** is implemented in a SIM **913**, which includes the DDR Processor **114** for securely monitoring communications from modem and SIM bus **912** to SIM bus driver **916**, using OS stack data path interface **924** and/or modem data path interface **926** as similarly described herein. A mailbox function is similarly provided as described herein using DDR processor mailbox interface **922**, DDR mailbox data **914**, and DDR mailbox data **910** as shown.

As also shown in FIG. **9**, data path communications via modem and SIM bus **913** to 3G/4G modem bus driver **934** to 3G/4G modem data path and signal processing elements **938** are monitored using modem SIM data security verifier **936** as described herein. The modem SIM data security verifier **936** is implemented in a modem chipset SEE **932** of the modem chipset/MPU **930** as shown. Additionally, there is a DPSV mailbox **842** that provides the communication channel to APU which the final destination to be DDR processor within the SIM for authentication and establishment of secret session key to be used as the basis for message integrity checking.

In some embodiments, the SIM includes a Data Path Processor (DPP) that embeds the DDR function, which is secured in the SIM SEE. For example, the SIM DPP can also include other service monitoring, control, and notification functions. In some embodiments, the modem includes a Data Path Security Verifier (DPSV) that secures the path between the SIM DPP and the modem network data path so that only the DPP can transmit over the modem even if other software, firmware, buses, or ports have access to the modem.

In some embodiments, the modem DPSV is bound to the SIM DPP by one of the following techniques and/or similar or other techniques as would be apparent to one of ordinary skill in the art in view of the various embodiments described herein.

For example, the SIM DPP can be provided in a secured data path to the modem network connection that cannot be circumvented by software, firmware, buses, or ports on the device. The secured data path can be a hardwired data path via hardware design or a data path secured with a secure firmware or software execution environment for all the data path elements below the SIM DPP. In some embodiments, the communication between the DPSV **936** and DDR Processor **114** is secured using various secure communication techniques, such as those described herein. In some embodiments, the DPSV has a unique private/public key pair and a digital certificate (cert) that attests to the authenticity of its public key. The DDR Processor has a unique private/public key pair and a digital certificate (cert) that attests to the authenticity of its public key. The DPSV and the DDR Processor exchange public keys and certs, then execute a key exchange process that authenticates each other and results in a secret, shared session key. The DDR Processor receives upstream network data flows from the device OS networking stack and, using the session key, it appends an integrity check to each upstream data message that it sends to the DPSV. The DPSV blocks any upstream data path information that does not have a valid integrity check from the DDR Processor and informs the DDR Processor that it is receiving invalid upstream data so that the DDR Processor may inform the Service Controller of a possible fraud event. The DPSV receives downstream network data flows and, using the session key, it appends an integrity check to each downstream data message that it sends to the DDR Processor. Each downstream data message is, for example, sequenced so that data messages cannot be blocked or replayed without being detected by the DDR Processor. If the DDR Processor receives a downstream data message with an invalid integrity check, the DDR Processor rejects the message and informs the Service Controller of a possible fraud event. The DDR Processor acknowledges each non-rejected downstream data message in the next upstream data message it sends to the DPSV. If the DPSV stops receiving downstream data message acknowledgements, it blocks downstream network data flows and informs the DDR Processor so that the DDR Processor may inform the Service Controller of a possible fraud event. The DDR Processor securely sends DDR reports to the Service Controller by way of the Service Processor as described herein with respect to various embodiments.

In some embodiments, the modem downstream data path messages between the DPSV and DPP are sequenced. In some embodiments, the SIM DPP upstream messages include downstream sequence information so that modem DPSV can confirm that the SIM DPP is receiving all downstream packets and, if not, then modem DPSV can inform the SIM DPP, inform the Service Controller, and/or take action such as restricting access or another appropriation action(s).

In some embodiments, the SIM-MPU interface is a physical interface (e.g., a bus). In some embodiments, the SIM-MPU interface is a logical interface (e.g., via untrusted APU). In some embodiments, the SIM is logically an independent security hardware module (e.g., part of a secure execution environment) embedded into any device processing element (e.g., a SIM, video processor, audio processor, display processor, etc.).

In some embodiments, a SIM and MPU exchange comprises several components. In some embodiments, each of the MPU and the SIM has its own public/private encryption key pair with a certificate. In some embodiments, the MPU and SIM exchange keys using a key exchange protocol. In some embodiments, this key exchange takes place over a physical bus between the MPU and the SIM. In some embodiments, this key exchange takes place through a logical bus (e.g., via an untrusted APU). Such key exchanges protocols are well known in the art and are not described here. In some embodiments, after the MPU and SIM have mutually authenticated the keys using certificates, they establish a shared session key. In some embodiments, the MPU and SIM initialize a transmit count value to zero, a receive count value to zero, a maximum transmit count value to an integer N, and a maximum receive count value to an integer M. In some embodiments, the values of M and N are the same. In some embodiments, the values of M and N are implementation-dependent and can be determined based on the MPU's receive and transmit packet processing capabilities. For example, by choosing M to be 3 and N to be 2, the SIM block expects to get an ACK frame from the MPU after no more than three received packets and no later than after two transmitted packets; otherwise the SIM concludes that fraud has occurred and informs a network element.

In some embodiments, the MPU sends only a relevant portion of the transmit frame to the SIM for each outgoing packet in order to reduce SIM processing requirements. In some embodiments, the relevant portion of the transmit frames includes a header, transmit count, and an integrity check. In some embodiments, the header includes information such as one or more of source and destination addresses, source and destination ports, a protocol tag, and a packet length in bytes. In some embodiments, the transmit count counts transmitted frames and increments with each transmit frame. In some embodiments, the integrity check is determined by hashing one or more of the session key, header, and the transmit count.

In some embodiments, the MPU also sends only a relevant portion of the receive frame to the SIM for each incoming packet. In some embodiments, the relevant portion of the receive frames includes a header, receive count, and an integrity check. In some embodiments, the header is the same as the transmit frame header (e.g., one or more of source and destination addresses, source and destination ports, a protocol tag, and a packet length in bytes). In some embodiments, the receive count increments with each received frame. In some embodiments, the integrity check is determined by hashing one or more of the session key, header, and transmit count.

In some embodiments, the frame acknowledgment (e.g., ACK) is the sum of the maximum transmit count, the maximum receive count, and the integrity check. In some embodiments, the maximum transmit count is set to (transmit count +N), where transmit count is the transmit count from the most recent transmit frame. In some embodiments, the maximum receive count is set to (receive count +M), where receive count is the receive count from the most recent received frame. In some embodiments, the integrity check is determined by hashing one or more of the session key, maximum transmit count, and maximum receive count.

In some embodiments, the interface between the MPU and the SIM is a logical channel (e.g., via untrusted APU). In some embodiments, on the transmit side the APU sends the SIM the transmit frame header only (e.g., one or more of source and destination addresses, source and destination ports, a protocol tag, and a packet length in bytes). In some

embodiments, the SIM sends back to the APU the transmit count, the maximum receive count (e.g., receive count +M), and an integrity check. In some embodiments, the SIM increments the value of the transmit count for every transmitted frame. In some embodiments, the SIM determines the integrity check by hashing one or more the session key, the header, the transmit frame count and the maximum receive count. In some embodiments, the APU appends the header and the frame body to the SIM-delivered transmit count, max receive count, and the integrity check and sends the result to the MPU. In some embodiments, the MPU transmits only the frames passing the integrity check one at time. In such embodiments, the MPU may not use a maximum transmit count.

In some embodiments, the interface between the MPU and the SIM is a logical channel (e.g., via untrusted APU). In some embodiments, on the receive side the MPU sends the APU the header (e.g., one or more of source and destination addresses, source and destination ports, a protocol tag, and a packet length in bytes), the receive count, an integrity check, and the frame body. In some embodiments, the receive count is incremented for every received packet. In some embodiments, the integrity check is determined by hashing one or more of the session key, the header, and the receive count. In some embodiments, the APU sends only the header (e.g., one or more of source and destination addresses, source and destination ports, a protocol tag, and a packet length in bytes), the receive count, and the integrity check to the SIM. In some embodiments, the MPU can process more than a single receive frame before obtaining the SIM confirmation feedback. In some embodiments, the SIM ACK frame (e.g., the indication of the maximum receive count) is piggybacked onto the frame as described herein.

In some embodiments, the MPU sends the entire data frame to the SIM, and the SIM appends an integrity check to be validated on the transmit side and on the receive side. In some embodiments, the DSPV engine adds the integrity check to the data frames and sends them to the SIM. In such embodiments, the SIM interfaces with the APU, and the SIM (DDR Processor) is in the middle of the data exchange.

In some embodiments, in each transmit frame, the MPU increments the transmit count and compares that value to the value of maximum transmit count as obtained from the most recent frame acknowledgment. In some embodiments, if the transmit count is greater than the maximum transmit count, the MPU determines that the SIM is not receiving valid transmit frame data. In some embodiments, the MPU informs a network element (e.g., a trusted entity such as a service controller) that a fraud has occurred after determining that the SIM is not receiving valid transmit frame data.

In some embodiments, if the MPU detects an invalid integrity check in a frame acknowledgment, or if the SIM detects an invalid integrity check on a transmit frame, the MPU or the SIM determines that malicious behavior is occurring. In some embodiments, when the MPU or the SIM determines that malicious behavior is occurring, the MPU or the SIM informs a network element (e.g., a trusted entity such as a service controller) that a fraud has occurred. In some embodiments, if the MPU or the SIM does not determine that malicious behavior is occurring, the SIM updates the DDR data collection using the header from the transmit frame and reports the results to the network element.

In some embodiments, in each receive frame, the MPU increments the receive count and compares that value to the value of the maximum transmit count as obtained from the most recent frame acknowledgment. In some embodiments, if the receive count is greater than the maximum receive count, the MPU determines that the SIM is not receiving valid receive frame data. In some embodiments, the MPU informs a network element (e.g., a trusted entity such as a service controller) that a fraud has occurred after determining that the SIM is not receiving valid receive frame data.

In some embodiments, if the MPU detects and invalid integrity check in a frame acknowledgment, or if the SIM detects an invalid integrity check on a receive frame, the MPU or the SIM determines that malicious behavior is occurring. In some embodiments, when the MPU or the SIM determines that malicious behavior is occurring, the MPU or the SIM informs a network element (e.g., a trusted entity such as a service controller) that a fraud has occurred. In some embodiments, if the MPU or the SIM does not determine that malicious behavior is occurring, the SIM updates the DDR data collection using the header from the receive frame and reports the results to the network element.

In some embodiments, the SIM DPP generates secure DDRs and communicates the secure DDRs to the Service Controller in a sequenced and secure manner as described herein with respect to various embodiments.

In some embodiments, the Service Processor application and/or Service Processor kernel program informs the SIM DPP which sockets/flows belong to which applications so that the SIM DPP knows which application is generating or receiving traffic in order to assist in application classification tag for charging, traffic control, and notification policy.

In some embodiments, the SIM DPP performs a variety of functions, as described herein. For example, the SIM DPP can perform the DDR Processor functions. The SIM DPP can perform any or all of the service monitoring functions of the Charging Agent (CA) and/or Policy Decision Agent (PDA). The SIM DPP counts all traffic with the network, and in some cases, also classifies the traffic by application and/or destination, NBS, time of day (TOD), active network, and/or various other criteria. The SIM DPP can generate charging records. The SIM DPP can communicate charging records to the Service Controller (e.g., or another network charging function) and/or device notification UI.

As another example, the SIM DPP can perform various access controller functions. The SIM DPP can instruct the Service Processor application and/or kernel program to either allow, block/kill, or background an application or destination. The Service Processor application and/or kernel program can allow, block/kill, or background an application by manipulating the application access to the network or by intercepting the application program boot/start sequence, or from suspending/resuming the application. The Service Processor application and/or kernel program can perform the intercept functions by reprogramming or intercepting application management functions in the OS (e.g., such as the Android activity manager and/or the service manager functions). As an example, the SIM DPP can either instruct the Service Processor application and/or kernel program to control the application and/or traffic, or controls traffic directly in the DPP. The SIM DPP can also perform policy enforcement functions as described herein.

As yet another example, the SIM DPP can perform NBS monitoring and/or reporting functions. The SIM DPP can detect NB S, modem performance parameters, network assets involved in link, and geo-location.

As yet a further example, SIM DPP can obtain a network time from network with "secure" ping-loop system to verify that network time stamp is not intercepted and delayed. For

example, the SIM DPP can either have local reliable clock or can perform ping-loop each time a report is started and/or stopped.

FIG. **10** illustrates another architecture for a secure embedded DDR Processor in a Subscriber Identity Module (SIM) and a Data Path Security Verifier (DPSV) in an MPU implementation in accordance with some embodiments. In some applications it may be desirable to locate the DDR Processor on a standalone chipset that attaches to the APU or MPU chipset, such as a SIM card. FIG. **10** illustrates such an implementation in accordance with some embodiments. For example, an embedded DDR Processor can be implemented on a smart phone APU chipset combined with a Data Path Security Verifier (DPSV) implemented on a 3G or 4G wireless modem chipset.

In some embodiments, a hardware or firmware secure data path between the DDR Processor and the modem DPSV is not required, such as shown in FIG. **10**, in which the DDR Processor is implemented on the SIM card (e.g., or another standalone security chipset) by providing a data path logical channel forwarding function on the APU and providing a mailbox data communication function between the Service Controller and the DDR Processor to connect over a SIM data bus. In addition, the DDR Processor reports to the Service Controller can be secured with none of the system elements on the APU being secured in a hardware assisted secured execution environment (SEE).

Referring to FIG. **10**, the secure DDR Processor **114** is located in DDR Secure Execution Memory **1042** of SIM Secure Execution Environment **1040** on the SIM as shown, as similarly described above with respect to FIG. **9**. The architecture of the APU is similar to that shown in and discussed above with respect to FIG. **9**, except that an APU SIM to modem bus forwarding function **1012** and an APU bus driver function **1014** are added to the APU in the APU Chipset Kernel Programs **1004** as shown in FIG. **10**. A secure DPSV **1026** is located in modem chipset SEE **1024** of the modem for monitoring communications from 3G/4G modem bus driver using 3G/4G modem data path and signal processing elements **1028** as similarly described above with respect to FIG. **9**. However, in FIG. **10** in comparison with FIG. **9**, the MPU and SIM are separate hardware or chipsets that communicate with the APU via independent communication buses. In particular, the MPU communicates with the APU via modem bus **1018** using 3G/4G modem bus driver **1022** to APU modem bus driver **1014** and APU SIM to modem bus forwarding function **1012** as shown. The SIM communicates with the APU via SIM bus **1016** using SIM bus driver **1032** to SIM bus driver **1010** as shown. Also, the DPSV uses DPSV mailbox **842** as the communication channel to authenticate the DDR processor **114** in the SIM where the connection is established within the APU. As shown the APU has two communication channels; a first communication channel with the DDR processor and a second communication channel with the DPSV.

In some embodiments, a first logical communication channel is created over the SIM bus **1016** between the Service Processor DDR mailbox **910** on the APU and the DDR mailbox **1034** on the SIM, and this supports the communication between the Service Processor (e.g., Service Processor application program **112** and/or Service Processor kernel program **113**) and the DDR Processor **114** using DDR processor mailbox interface **1044** to DDR mailbox data **1034** to SIM bus driver **1032** as shown. A second logical data channel is created over the SIM bus **1016** between the OS networking stack and the DDR Processor **114**, and this is the logical channel intended for all OS networking stack communications with the 3G or 4G network using OS stack data path interface **1046** to SIM bus driver **1032** as also shown. A third logical communication channel is created between the SIM DDR Processor **114** and the modem DPSV **1026**. This third logical communication channel is formed by forwarding data between the SIM bus interface (e.g., modem data path interface **1048** to SIM bus driver **1032**) located on the SIM, the SIM bus driver **1010** located on the APU, the SIM to modem bus forwarding function **1012** located on the APU, the modem bus driver **1014** located on the APU, and the modem bus interface **1022** located on the modem as also shown.

In some embodiments, the communication between the DPSV **1026** and DDR Processor **114** is secured using various secure communication techniques, such as those described herein. In some embodiments, the DPSV has a unique private/public key pair and a digital certificate (cert) that attests to the authenticity of its public key. The DDR Processor has a unique private/public key pair and a digital certificate (cert) that attests to the authenticity of its public key. The DPSV and the DDR Processor exchange public keys and certs, then execute a key exchange process that authenticates each other and results in a secret, shared session key. The DDR Processor receives upstream network data flows from the device OS networking stack and, using the session key, it appends an integrity check to each upstream data message that it sends to the DPSV. The DPSV blocks any upstream data path information that does not have a valid integrity check from the DDR Processor and informs the DDR Processor that it is receiving invalid upstream data so that the DDR Processor may inform the Service Controller of a possible fraud event. The DPSV receives downstream network data flows and, using the session key, it appends an integrity check to each downstream data message that it sends to the DDR Processor. Each downstream data message is, for example, sequenced so that data messages cannot be blocked or replayed without being detected by the DDR Processor. If the DDR Processor receives a downstream data message with an invalid integrity check, the DDR Processor rejects the message and informs the Service Controller of a possible fraud event. The DDR Processor acknowledges each non-rejected downstream data message in the next upstream data message it sends to the DPSV. If the DPSV stops receiving downstream data message acknowledgements, it blocks downstream network data flows and informs the DDR Processor so that the DDR Processor may inform the Service Controller of a possible fraud event. The DDR Processor securely sends DDR reports to the Service Controller by way of the Service Processor as described herein with respect to various embodiments.

In some embodiments, the DDRs transmitted from the DDR Processor to the Service Controller are integrity checked and sequenced in a manner that cannot be tampered with or replayed. An authentication process between the DDR Processor and the Service Controller combined with a set of unique DDR report sequence identifiers and authentication session keep-alive timers are used to maintain and confirm the secure connection between the DDR Processor and the Service Controller. If the secure session or the flow of DDR records between the DDR Processor and the Service Controller are interrupted, then the access control function in the DDR Processor restricts access of the 3G or 4G modem data path to the network destinations necessary to reestablish a securely authenticated session with between the DDR and the Service Controller.

FIG. **11** illustrates another architecture for a secure embedded DDR Processor in a Subscriber Identity Module (SIM) and a Data Path Security Verifier (DPSV) in an MPU implementation in accordance with some embodiments. FIG. **11** is similar to FIG. **9** except that as shown a SIM data path interface **1110** is provided for direct communication from the SIM with 3G or 4G modem bus driver **934** on the MPU. SIM communications, such as those similarly described herein to the APU including the mailbox function, communicate using the SIM data path interface **1110** to the 3G or 4G modem bus driver **934** using modem bus **1112** to communicate with the APU via modem bus driver **911** and the APU stack interface for 3G or 4G modem **906** as shown.

In some embodiments, various other architectures including various other locations of the DDR Processor can be provided using these or similar techniques as will now be apparent to one of ordinary skill in the art in view of the embodiments described herein.

In some embodiments, various other architectures including various other locations of the DDR Processor and/or DPSV can be provided using these or similar techniques as will now be apparent to one of ordinary skill in the art in view of the embodiments described herein.

For example, the DDR Processor (e.g., and/or various secured elements of the Service Processor) can be located in various other locations (e.g., in various secure operating environments) that involve network access policy enforcement at higher levels in the network stack. In particular, certain functions performed by the Service Processor without hardware security can be located in hardware secured execution memory. Such functions can include 3G and 4G network data path processing and usage report functions, 3G and 4G network application access management and usage reporting functions, and 3G and 4G service user notification and customer activity status functions.

FIG. **16** illustrates an embodiment in which the secure execution environment (referred to in FIG. **16** as zone of data path security **140** or SEE) includes secure service processor elements **1604**. FIG. **16** illustrates a number of I/O modems **250** for various device I/O ports numbered #**1** through # N (e.g., possibly including but not limited to 2G, 3G, 4G, WiFi, Ethernet, USB, Firewire, Bluetooth, and NFC). Modem bus driver and physical layer bus **142** are located in the secure execution environment (zone of data path security **140**), and thus the secure execution environment protects secure service processor elements **1604** and the data path between secure service processor elements **1604** and the device I/O ports. In some embodiments, secure service processor elements **1604** include the portions of the service processor that are desired to be protected from malware or unauthorized user tampering or configuration changes, including but not limited to the secure service processor elements responsible for policy enforcement, I/O port communication activity monitoring and reporting, I/O port communication control or traffic control, application activity monitoring, application control, application access control or traffic control, network destination monitoring and reporting, network destination access control or traffic control, and device environment monitoring and integrity verification. Network stack **136** is also shown in FIG. **16** in the secure execution environment, but in general not all of the network stack functions need to be implemented in the secure execution environment, provided that the data path below the monitoring point in secure service processor elements **1604** and I/O modems **250** is secured (e.g., unauthorized data path access is not available or allowed). In the embodiment shown in FIG. **16**, secure service processor elements **1604** interact with network stack **136** to implement the various I/O port activity monitoring and control functions described herein. Non-secure service processor elements **1602** are also included but not limited to user interface elements.

In some embodiments, using secure execution environment partitioning technology, large portions or the entire service processor functionality are implemented in hardware secured execution environments in the APU or MPU. In some embodiments, using secure CPU partitioning technology, large portions or the entire Service Processor functionality are implemented in hardware secured execution environments in the APU or MPU. As an example embodiment, service processor functions that can be executed within a secure execution environment include policy enforcement actions in accordance with a set of policy instructions stored in the secure execution environment such as: managing policy for one or more of 2G, 3G or 4G network (and/or other I/O ports such as Ethernet, WiFi, USB, Firewire, Bluetooth, or NFC), wherein the policy management can include application access management, application traffic processing, application access monitoring and reporting, or application access service accounting and reporting. As another example embodiment, secure service processor element functions that can be executed within a secure execution environment include managing policy for one or more applications wherein the policy specifies whether to block, allow, or throttle the applications in accordance with a set of policy instructions stored in the secure execution environment. As another example embodiment, secure service processor element functions that can be executed within a secure execution environment include managing policy for one or more applications wherein the policy includes application activity monitoring and reporting or operating environment monitoring and reporting (e.g., monitoring the security status or presence of malware in the device operating environment). As another example embodiment, secure service processor element functions that can be executed within a secure execution environment include managing policy for one or more network destinations or resources that can include websites, domains, URLs, IP and/or TCP addresses, server names, other devices, or content sources, wherein the policy includes access management, traffic control, access monitoring or access service accounting. As another example embodiment, secure service processor element functions that can be executed within a secure execution environment include managing policy for one or more roaming access networks. As another example embodiment, secure service processor element functions that can be executed within a secure execution environment include monitoring and reporting communication activity on one or more device I/O connections including one or more of a 2G, 3G, 4G and/or other I/O port. In some embodiments, secure service processor element functions that can be executed within a secure execution environment include monitoring, classifying (e.g., identifying application and/or network destination associated with the I/O port activity) and reporting communication activity on one or more device I/O connections, including one or more of a 2G, 3G, 4G and/or other I/O port. In some embodiments, a service controller located in the network provides the set of policy instructions stored in the secure execution environment by communicating them to the secure service processor element via a secure communication link as described herein. In some embodiments, these policy enforcement actions involving reporting can include sending the reports to a service controller located in the network via a secure com-

munication link into the secure execution environment as described herein for further processing of the reports. In some embodiments, sending the reports to a service controller located in the network via a secure communication link into the secure execution environment can include the authenticated secure sequencing and receipt protocols described herein.

As another example embodiment, secure service processor element functions that can be executed within a secure execution environment can include one or more of: (i) a secure application manager that identifies traffic associated with a specific application or group of applications to differentially manage one or more of 2G, 3G and 4G application access policies (e.g., allow, block, throttle, defer for later transmission, apply a given QoS level) or service usage accounting (and/or accounting for application access by one or more other I/O ports, such as Ethernet, WiFi, USB, Firewire, Bluetooth, or NFC), (ii) a secure application manager that identifies when an application is attempting to run and determines whether to permit the application to run or to not allow the application to run based on a set of application policies, (iii) a secure application manager that differentially manages 3G and 4G application access (and/or application access or service usage accounting for one or more other I/O ports) according to network access policy set by the service controller and network busy state determined on the device, and (iv) 3G and 4G network traffic that is classified and processed according to application identifier, layer 7 destination as well as layer 3/4 destination and network busy state. In some embodiments, securing such service processor functions can be augmented by: (i) configuring the secure execution environment with the various operating environment techniques disclosed herein so that the service processor achieves a similar degree of protection from hacking and malware described for lower levels of stack processing (e.g., the DDR processor SEE embodiments described herein), (ii) protecting or securing the data path between the DDR Processor (e.g., and/or elements of the service processor) and the modem antenna connection from circumvention or tampering by device malware, and (iii) providing sufficient secure or protected memory and sufficient secure execution environment CPU cycles to execute the more sophisticated data path processing functions.

In some embodiments, a secure communication between a network-based service controller and a device-based secure service processor element operating in a secure execution environment on a device connected to a wide area access network is used for secure (or trusted) delivery of secure service processor element I/O activity monitor records for one or more I/O ports (e.g., an I/O port including but not limited to 2G, 3G, 4G, Ethernet, WiFi, USB, Firewire, Bluetooth, or NFC), wherein the secure communication includes a secure message receipt feedback loop. In some embodiments, if the secure message feedback loop is interrupted, a secure service processor element secure communication channel error condition is detected and acted on. In some embodiments, an ordered sequence of secure service processor element I/O activity reports is communicated to a service controller using a signed or encrypted communication channel, and if the ordered sequence is interrupted or tampered with, a device secure service processor element secure communication channel error condition is detected and acted on. In some embodiments, the service controller observes the integrity of the ordered sequence of secure service processor element I/O activity reports to determine if device data records have been tampered with or omitted. In some embodiments, if the secure service processor element determines that the I/O activity monitor records have not been tampered with or omitted, the service controller sends back a signed or encrypted I/O activity monitor record receipt message. In some embodiments, if the secure service processor element determines that an I/O activity monitor record has been tampered with or omitted, the service controller sends back an error message or does not send back a signed or encrypted I/O activity monitor record receipt message. In some embodiments, if the secure service processor element receives an error message from the service controller, or does not receive a signed or encrypted I/O activity monitor record receipt message within a certain period of time or within a certain number of transmitted I/O activity monitor records or within a certain amount of communication information processed, then (i) a device configuration error message is generated for delivery to a security administrator or server, and/or (ii) one or more of the wireless network connections or other I/O connections or ports of the wireless communication device are either blocked or restricted to a pre-determined set of safe destinations. In this manner, if a device secure service processor element, the device operating environment, device operating system, or device software is tampered with in a manner that produces wireless network or other I/O port access service usage characteristics that are not compliant with expected policy or allowed policy, a device configuration error message can be generated, or device wireless network access or other I/O connection accesses can be restricted or blocked. Such embodiments can be helpful in securing device-based network access (or I/O control) policies and can also be helpful in identifying device software that has been tampered with or any malware that is present on the device. In some embodiments, the restriction on wireless network accesses or other I/O accesses results in access to a limited number of network destinations or resources sufficient to allow further analysis or troubleshooting of the device configuration error condition.

In some embodiments, the secure service processor element executing within a secure execution environment and communicating with a service controller via a secure communication link that includes a secure message receipt feedback loop observes device application and/or I/O port activity and generates one or more of the following device activity reports: service usage reports, service usage reports including service usage classification, application service usage reports, network destination service usage reports, service usage reports including network type identifiers, service usage reports including location identifiers, application access monitoring reports, application access service accounting reports, application activity monitoring reports, device operating environment monitoring reports.

In some embodiments, the secure service processor element executing within a secure execution environment and communicating with a service controller via a secure communication link that includes a secure message receipt feedback loop observes device application and/or I/O port activity and generates a roaming network service usage report.

In some embodiments, the service controller observes the secure service processor element I/O activity records to determine if the device is in compliance with a service controller policy condition. In some embodiments, determining whether the device is in compliance with the service controller policy condition comprises verifying that the device secure service processor element is properly implementing a device policy. In some embodiments, the device

policy being verified is a network access service policy enforcement set. In some embodiments, the device policy that is verified is a network access service policy enforcement set comprising a network access service plan policy enforcement set, including a set of policies for one or more of network access control or traffic control, network application control, network destination control, network charging or accounting, and network service usage notification. In some embodiments, the device policy that is verified is whether or not the device application activity is in accordance with a set of pre-determined policies (e.g., determining if the applications that are accessing the network or other I/O ports are all allowed applications, or determining if the applications accessing the network or other I/O ports are behaving according to expected policy behavior). In some embodiments, the device policy verification includes whether the device is accessing approved or unapproved networks. In some embodiments, the device policy verification includes whether the device is communicating specified content via one or more allowed wireless connections or other I/O ports, or is communicating specified content over one or more wireless networks or I/O ports that are not allowed. In some embodiments, the device policy verification includes whether the device is communicating specified content via an allowed secure link over one or more wireless connections or other I/O ports, or is communicating specified content over an insecure link. In some embodiments, the device policy verification includes whether the device is communicating from an allowed location or from a location that is not allowed. In some embodiments, the device policy verification includes whether or not the device operating environment monitoring reports indicate that the device operating environment is free of any malicious software or erroneous operating conditions.

In some embodiments, secure service processor elements **1604** are implemented within a secure execution environment (zone of data path security **140**) that is located on a SIM card. The various embodiments described in relation to FIGS. **9**, **10** and **11** and the associated disclosures facilitate implementation of secure service processor elements **1604** on a SIM card by simply replacing DDR processor **114** by the secure service processor elements and adapting the embodiment descriptions, as would be understood by one of ordinary skill in the art. This allows sophisticated device wide area network access control or charging functions, as described in the context of the various secure service processor element embodiments, to be implemented on a SIM card that can controlled and distributed by a network operator.

Additional embodiments are now provided for various aspects of DDR Processor functional operations.

DDR Firmware Installation, Security Credential Configuration, and Update

FIG. **12** illustrates a secure boot sequence flow diagram in accordance with some embodiments. In some embodiments, upon a reset and/or power up at **1202**, the system (e.g., APU, SIM, and/or MPU, whichever the DDR is embedded on in the wireless communication device) starts by executing a secure boot (e.g., executing secure boot code) at **1204**. As part of the secure boot, an initialization routine is performed to configure system parameters (e.g., configures registers to ensure secure region, such as HW/firmware firewall memory) to establish the secure/normal region boundary and interfaces. The secure boot code also has access to the root of trust, which is hidden to all other firmware/software. At **1206**, a public keys certificate validation step is performed in which the secure boot downloads and verifies its own public key (e.g., using a hashing technique) and then downloads public keys of all secure codes at **1206**. At **1208**, the secure boot proceeds to download and verify/validate digital signatures of every secure software package (e.g., including the DDR Processor including a DDR generator) before allowing normal software routines to be downloaded. For example, this can be performed using a chain of trust built on the root of trust. At **1210**, the secure boot determines if all signatures are properly validated. If any digital signature fails, then the secure boot stays looped in the idle state as shown at **1212** until it gets reset as shown at **1202** (e.g., watch dog timer expires) and/or the platform is flashed with a new image. If all of the digital signatures are properly validated, then the secure boot proceeds with other downloads (e.g., including applications) at **1214**. Normal operation proceeds and the secure boot is completed at **1216**. At **1218**, whether there is a new image is determined. If not, then normal operation continues at **1216**. When new secure software image is downloaded (e.g., the image is stored in new area of the flash memory with a "secure" flag set), and the system can return to reset state to have the secure boot reading the new image (e.g., based on the flag) and validate the digital signature of the image before it becomes the current image.

Mailbox Communication Channel Between the Service Processor and DDR Processor

FIG. **13** illustrates a functional diagram for passing DDR Service Processor mailbox messages between secure and unsecure memory regions in accordance with some embodiments. In some embodiments, a logical communication channel between the DDR Processor **1314** and the Service Processor **1312** is provided in order to send secure DDR messages (e.g., DDR message bundles) to the Service Controller (e.g., via the Service Processor's communication agent). In some embodiments, this logical communication channel is referred to in various embodiments described herein as the DDR Mailbox Data functional element/block. For example, for ease of implementation, it can be assumed that the DDR processor does not have an IP address of its own hence can only send its message to the Service Controller through the Service Processor using this logical channel. The logical channel can be based on shared memory (e.g., normal region) architecture, shown as normal region shared memory **1310**. As described herein with respect to various embodiments, the DDR messages are encrypted and can only be decrypted by the Service Controller. This logical channel can also be used for Service Controller to send down new DDR software updates.

In some embodiments, in which the DDR Processor is located in the APU, then the shared memory can be accessed via both Service Processor and DDR Processor using the APU's direct memory access (DMA) engines.

In some embodiments, in which the DDR Processor is located in the MPU, then a modem interface is provided to support an additional logical channel (e.g., USB endpoint for 2G/3G/4G) to satisfy this requirement. In some embodiments, the logical channel is piggybacked on top of an existing configuration and status channel that provides the control channel between the APU and the MPU.

DDR Processor Record Generator

In some embodiments, a DDR report spans a measurement period. Measurement periods are generally contiguous, meaning the next period begins immediately after the current period ends, with no traffic falling between periods. At the start of a period, all prior DDRs are deleted. During the period, the table of DDRs grows, since each observed IP flow creates an entry in the table. The period ends when

either DDR storage exceeds a predefined threshold, or when a DDR report is requested by the Service Processor. DDR data not yet sent to the Service Processor application remains in memory across power cycles and battery pulls.

In some embodiments, at the end of the measurement period, the DDR report is prepared by the DDR Processor and sent to the Service Processor. For example, various secure communication and/or crypto techniques can be used to ensure that the contents of the report are kept private, and to ensure that any tampering with the DDR report will be detected by the Service Controller.

In some embodiments, the report also includes time stamps that identify the start and end of the measurement period. Timestamps are calibrated and confirmed via a periodic handshake with the Service Controller to ensure that the DDR Processor time base has not been altered. Data compression is used to minimize the size of the report.

In some embodiments, each DDR report message includes a unique sequence identifier that allows the Service Controller to determine if any DDRs have been blocked from the sequence. The report is stored by the Service Processor for subsequent forwarding to the Service Controller. Data stored by the Service Processor remains in memory across power cycles and battery pulls.

In some embodiments, the DDR processor resides in the modem where the secure DDR usage report is then sent to the Service Processor (e.g., communication agent within the Service Processor) to be sent to the Service Controller.

DDR Processor Access Controller

FIG. **14** illustrates a flow diagram for a DDR Processor Service Controller session authentication and verification in accordance with some embodiments. In some embodiments, the DDR Processor includes an access controller function (e.g., Access Controller). In some embodiments, upon reset and/or powering up a DDR Processor access control function, such as the Access Controller, restricts network access (e.g., to only a few pre-configured IP addresses and/or host names including certain carrier/wireless service provider services).

In some embodiments, the Access Controller ensures that the Service Processor correctly delivers DDRs to the Service Controller. If the DDR flow is blocked or tampered with, then the Access Controller blocks cellular (e.g., or managed WiFi) wireless network access until the proper flow of DDRs is restored. In some embodiments, the network access restriction is only applied to networks that have network access services maintained and managed by the network operator. For example, this function can disabled for WiFi access that is not managed by the network operator.

In some embodiments, once a modem is authenticated (e.g., via a PPP session) via AAA, either after initial power up and/or after restoring from power save, the Access Controller restricts limited network access (e.g., based on set of IP addresses/host names and/or other criteria) until it gets feedback from the Service Controller to allow open access. Also, while traffic is running and the DDR Processor sending DDR records/reports, it continually expects to receive secure DDR ACK frames to allow open access, otherwise it enters a restrict access state again.

Referring now to FIG. **14**, at reset and/or initial power up or power up after a power save mode, the process begins, as shown at **1402**. At **1404**, the Access Controller restricts network access to limited streams (e.g., preconfigured or configured within the secure region. At **1406**, the Access Controller waits for feedback from the Service Controller to open network access. At **1408**, whether the feedback is received from the Service Controller is determined. If not, then the process returns to **1406** to continue to wait for feedback from the Service Controller. If the feedback is received (e.g., and the secured Service Controller feedback is properly verified and/or validated, as described herein), then the Access Controller opens network access and DDR reports begin to be sent at **1410**. At **1412**, whether a DDR ACK frame is received in response to such DDR report(s) is determined. If not, then the process returns to **1404** and network access is restricted. If the DDR ACK frame is received (e.g., and the secured DDR ACK frame is properly verified and/or validated, as described herein), then the Access Controller continues to maintain open network access and to send DDR reports at **1414**.

DDR Processor Network Busy State (NBS) Monitor

In some embodiments, the Network Busy State (NBS) Monitor is a secure firmware program element in the DDR Processor that monitors, records, and/or securely reports information on network busy state (e.g., or network congestion state) to the Service Controller for storage, network congestion analysis, and/or service charging and control policy security purposes. For example, the NBS Monitor can perform one or more of the following functions within the SEE: log active network information (e.g., active network type, home/roaming, current carrier, base station, and/or base station sector); monitor network access attempts and successes; monitor network speed; monitors round trip delay; monitor packet error rate; monitor modem performance parameters (e.g., RF channel, RF signal strength and variability, SNR, raw modem bit rate, raw modem bit error rate, and/or channel bandwidth); implements algorithm to classify busy state of network; and report network busy state history within DDRs.

Binding and Securing the Secure Communication Channel Between the DDR Processor and the Service Controller

In some embodiments, binding and securing the secure communication channel between the DDR Processor and the Service Controller is provided as described below. The DDR Processor has a unique private/public key pair and a digital certificate (cert) that attests to the authenticity of its public key. The Service Controller has a unique private/public key pair. Its public key is well known and included in the DDR Processor code image. The DDR Processor sends its public key and cert to the Service Controller, and the two execute a key exchange process that authenticates each other and results in a secret, shared session key. The DDR Processor uses the session key to encrypt DDR reports it sends to the Service Controller and to append an integrity check to messages it sends to the Service Controller. The Service Controller uses the session key to append an integrity check to messages it sends to the DDR Processor.

As will now be apparent to one of ordinary skill in the art in view of the various embodiments described herein, various other secure communication and crypto techniques can be used to provide for binding and securing the secure communication between the DDR Processor and the Service Controller.

Binding and Securing the Secure Communication Channel Between the DDR Processor and the DPSV In An APU/MPU Implementation

In some embodiments, binding and securing the secure communication channel between the DDR Processor and the DPSV in an APU/MPU implementation is provided as described below. The DPSV has a unique private/public key pair and a digital certificate (cert) that attests to the authenticity of its public key. The DDR processor has a unique private/public key pair and a digital certificate (cert) that attests to the authenticity of its public key. The DPSV and

the DDR Processor exchange public keys and certs, then execute a key exchange process that authenticates each other and results in a secret, shared session key. The DDR Processor receives upstream network data flows from the device OS networking stack and, using the session key, it appends an integrity check to each upstream data message that it sends to the DPSV. The DPSV blocks any upstream data path information that does not have a valid integrity check from the DDR Processor and informs the DDR Processor that it is receiving invalid upstream data so that the DDR Processor may inform the Service Controller of a possible fraud event. The DPSV receives downstream network data flows and, using the session key, it appends an integrity check to each downstream data message that it sends to the DDR Processor. Each downstream data message is sequenced so that data messages cannot be blocked or replayed without being detected by the DDR Processor. If the DDR Processor receives a downstream data message with an invalid integrity check, the DDR Processor rejects the message and informs the Service Controller of a possible fraud event. The DDR Processor acknowledges each non-rejected downstream data message in the next upstream data message it sends to the DPSV. If the DPSV stops receiving downstream data message acknowledgements, it blocks downstream network data flows and informs the DDR Processor so that the DDR Processor may inform the Service Controller of a possible fraud event. The DDR Processor securely sends DDR reports to the Service Controller by way of the Service Processor as described herein. The DDRs transmitted from the DDR Processor to the Service Controller are integrity checked and sequenced in a manner that cannot be tampered with or replayed. An authentication process between the DDR Processor and the Service Controller combined with a set of unique DDR report sequence identifiers and authentication session keep alive timers are used to maintain and confirm the secure connection between the DDR Processor and the Service Controller. If the secure session or the flow of DDR records between the DDR Processor and the Service Controller are interrupted, then the Access Controller function in the DDR Processor restricts access of the 2G, 3G, or 4G modem data path to the network destinations necessary to reestablish a securely authenticated session with between the DDR and the Service Controller.

As will now be apparent to one of ordinary skill in the art in view of the various embodiments described herein, various other secure communication and crypto techniques can be used to provide for binding and securing the secure communication channel between the DDR Processor and the DPSV in an APU/MPU implementation.

Security Requirements for OEM Programming of DDR Processor

In some embodiments, code signing for the DDR Processor is provided. In particular, the DDR Processor code image is digitally signed by the device OEM. The signature is verified by the Secure Boot Loader using a fixed public key embedded within the Secure Boot Loader code image. This imposes the security requirement that the OEM operate a secure code-signing facility that preserves the secrecy of the fixed signing key. The OEM ensures that only authorized personnel are able to access the code-signing facility and that they do so only for legitimate DDR Processor images.

In some embodiments, a random seed for the DDR device private key is provided. In particular, at the time of device manufacture, a private/public key pair called the DDR Device Key is assigned. The DDR Device Key is unique to each device and is used to establish a secure communications link to the Service Controller. For example, the DDR Device Key can be a Diffie-Hellman key pair with a 1024-bit modulus, 1024-bit base, and a 128-bit private exponent. The private exponent of the DDR Device Key (DDR Device Private Key) is unique to each device and stored in, for example, 128 bits of on-chip nonvolatile memory (e.g., OTP memory) in the SEE. The modulus and base are common to all devices and are embedded within the DDR Processor image. The public portion of the DDR Device Key (e.g., DDR Device Public Key) is not permanently stored; instead, it is calculated by the DDR Processor using the modulus, base, and private exponent. The DDR Processor includes a factory initialization routine that is executed while the device is being initialized and tested at the factory. The factory initialization routine generates the DDR Device Private Key and programs it into the nonvolatile memory of the SEE. The DDR Device Private Key never leaves the device and is accessible only to the DDR Processor. The factory initialization routine computes the DDR Device Public Key and exports it to the factory tester. For example, the factory tester can provide a 128-bit random string to be used by the factory initialization routine as a seed to generate the DDR Device Private Key. This requires that the factory tester include or have access to a high-quality random bit source. Various suitable methods can be used, such as FIPS 140-2 ("deterministic random number generators") seeded with the output of a hardware random source.

In some embodiments, at the time of device manufacture, a digital certificate called the DDR Device Cert is assigned to the device. The DDR Device Cert is unique to each device and is used to establish a secure communications link to the Service Controller. The contents of the DDR Device Cert include the DDR Device Public Key. The DDR Device Cert is signed by the issuing certificate authority, and the signature is verified by the Service Controller when establishing a secure link. The DDR Device Cert is not sensitive information and, for example, can be stored in either on-chip or off-chip nonvolatile memory. The OEM issues a DDR Device Cert for the DDR Device Public Key exported by the factory initialization routine, which imposes the security requirement that the OEM operates, or has access to, a certificate authority (CA). If the OEM chooses to access an outsourced CA, then the OEM's primary obligation is to ensure that only authorized personnel are able to request certificates, and that they do so only for devices that have DDR Device Public Keys legitimately exported by the FI routine. If the OEM chooses to operate a CA, the OEM has the additional obligation of maintaining the security of the CA, specifically, preserving the secrecy of the CA's fixed key that signs certificates.

As will now be apparent to one of ordinary skill in the art in view of the various embodiments described herein, various other security techniques can be used or required for OEM programming for the DDR Processor.

FIG. **15** illustrates a flow diagram for secure device data records for implementing device assisted services (DAS) in accordance with some embodiments. At **1502**, the process begins. At **1504**, service usage of a wireless communication device with a wireless network is monitored (e.g., using DAS client based monitoring techniques, such as including the various techniques described herein for implementing secure DDRs). At **1506**, secure device data records of the monitored service usage of the wireless communication device with the wireless network are generated. In some embodiments, each device data record is one of an ordered sequence of device data records with each sequential device data record providing an accounting of service usage over a

service usage interval spanned by the device data record, and each device data record is associated with a secured unique sequence order identifier. At **1508**, the device data records (DDRs) are reconciled and verified using the various reconciliation and verification techniques described herein. For example, the DDRs can be verified using the unique sequence order identifier (e.g., and various other integrity checking based techniques, as described herein with respect to various embodiments). As another example, the DDRs can be reconciled with other service usage reports by comparison with service processor reports (e.g., layer-7 classification reports) and/or by comparison with network based service usage reports (e.g., network flow records, such as CDRs or IPDRs), as described herein with respect to various embodiments. At **1510**, the process ends (e.g., and can repeat for continued service usage monitoring).

Exemplary Service Policy Verification Combinations

In some embodiments, a communications device comprises: one or more communication I/O ports, at least one of which is a wide area network connection port; storage for storing a device communication activity policy; a secure execution environment that is not accessible by user application software; a one or more secure data path processing agents configured to: execute in the secure environment, monitor device data communications activity on one or more device I/O ports, generate a device data record that summarizes an aspect of the device communications activity that provides information suitable for verifying that a device policy enforcement client is properly implementing the device communication activity policy, and communicate the device data record via a trusted communication link over the wide area network connection port to a network element; and a trusted data path between the one or more secure data path processing agents and the one or more I/O ports that cannot be accessed by device user application software. In some embodiments, the data path is trusted because tampering with or alterations to data on the data path are detectable. In some embodiments, intermediate elements on the data path cannot alter or tamper with the data without detection. In some embodiments, the data path is trusted because data sent over it is signed. In some embodiments, the trusted data path between the one or more secure data path processing agents and the one or more I/O ports is further configured to secure communications by encryption.

In some such embodiments, the trusted communication link includes a secure message receipt feedback loop.

In some embodiments, the one or more secure data path processing agents are further configured to restrict the access of one or more device I/O ports, and if the secure message receipt feedback loop indicates an error, then the one or more secure data path processing agents restricts access of one or more device I/O ports. In some embodiments, the restriction of access for one or more device I/O ports allows communication to a network element configured to provide the device with error handling service when a secure message receipt feedback loop error condition exists.

In some embodiments, the communications device receives the device communication activity policy from a network element. In some embodiments, the device communication activity policy comprises an application activity monitoring policy. In some embodiments, the device communication activity policy comprises a network destination, address or resource monitoring policy.

In some embodiments, the information suitable for verifying that the device policy enforcement client is properly implementing the device communication activity policy comprises communication activity records for one or more device I/O ports.

In some embodiments, the secure execution environment and the one or more secure data path processing agents are located in a secure execution partition controlled by an application processor. In some embodiments, the secure execution environment and the one or more secure data path processing agents are located in a secure execution partition controlled by an operating system or secure partitioning software. In some embodiments, the secure execution environment and the one or more secure data path processing agents are located in a secure execution partition controlled by a modem processor. In some embodiments, the secure execution environment and the one or more secure data path processing agents are located on a SIM card.

In some embodiments, the wide area network is a wireless network, and the information suitable for verifying that the device policy enforcement client is properly implementing the device communication activity policy comprises device wireless network service usage records.

In some embodiments, the wide area network is a wireless network, and the device communication activity policy comprises a network access control policy for the wireless network. In some such embodiments, the wireless network access control policy is a set of one or more control policies for one or more applications operating on the device. In some embodiments, the wireless network access control policy is set of one or more specific access control policies for one or more network destinations, addresses or resources accessible over the wireless network. In some embodiments, the wireless network is a roaming network, and the network access control policy defines policies that are specific to a device roaming network connection condition and different than a home network connection condition.

In some embodiments, the wide area network is a wireless network and the device communication activity policy comprises a network access service usage accounting policy for the wireless network. In some such embodiments, the network access service usage accounting policy is a set of one or more service usage accounting policies for one or more applications operating on the device. In some embodiments, the network access service usage accounting policy is a set of one or more service usage accounting policies for one or more network destinations, addresses or resources accessible over the wireless network. In some embodiments, the wireless network is a roaming network, and the network access service usage accounting policy defines service usage accounting policies that are specific to a device roaming network connection condition and different than a home network connection condition. In some such embodiments, the device communication activity policy further comprises requesting an access network service cost acknowledgement or payment indication from a device user and restricting device roaming network access privileges if the user does not provide an service cost acknowledgement or payment indication.

In some embodiments, a network system comprises: memory configured to store a device communication activity policy; a trusted communication link over a wide area network to a one or more secure data path processing agents; a communication link over the wide area network to a device policy enforcement client; and a policy verification processor configured to (i) store the device data records, (ii) receive device data records from a communications device over the trusted communication link, the device data records containing information that summarizes an aspect of the device

communications activity that provides information suitable for verifying that the device policy enforcement client is properly implementing the device communication activity policy, (iii) analyze the information contained in the device data record to determine if the device policy enforcement client is properly implementing the device communication activity policy, and (iv) take an error handling action if the analysis indicates that the device policy enforcement client is not properly implementing the device communication activity policy.

In some such embodiments, the trusted communication link includes a secure message receipt feedback loop. In some embodiments, the network system further comprises an error handling processor that detects when an error condition exists with the secure message receipt feedback loop, flags the error condition to an administrator or error tracking system, and communicates with the device to analyze the error or provide error messages to a device user.

In some embodiments, the network system communicates the device communication activity policy to the device. In some embodiments, the device communication activity policy comprises an application activity monitoring policy. In some embodiments, the device communication activity policy comprises a network destination, address or resource monitoring policy.

In some embodiments, the information suitable for verifying that the device policy enforcement client is properly implementing the device communication activity policy comprises communication activity records for one or more device I/O ports.

In some embodiments, the wide area network is a wireless network, and the information suitable for verifying that the device policy enforcement client is properly implementing the device communication activity policy comprises device wireless network service usage records.

In some embodiments, the wide area network is a wireless network, and the device communication activity policy comprises a network access control policy for the wireless network. In some such embodiments, the wireless network access control policy is a set of one or more control policies for one or more applications operating on the device. In some embodiments, the wireless network access control policy is a set of one or more specific access control policies for one or more network destinations, addresses or resources accessible over the wireless network. In some embodiments, the wireless network is a roaming network and the network access control policy defines policies that are specific to a device roaming network connection condition and different than a home network connection condition.

In some embodiments, the wide area network is a wireless network, and the device communication activity policy comprises a network access service usage accounting policy for the wireless network. In some such embodiments, the network access service usage accounting policy is a set of one or more service usage accounting policies for one or more applications operating on the device. In some embodiments, the network access service usage accounting policy is a set of one or more service usage accounting policies for one or more network destinations, addresses or resources accessible over the wireless network. In some embodiments, the wireless network is a roaming network and the network access service usage accounting policy defines service usage accounting policies that are specific to a device roaming network connection condition and different than a home network connection condition.

Exemplary Combinations Using a Receipt Feedback Loop

In some embodiments, a communications device comprises: one or more I/O ports, at least one of which is a wide area network connection port; a secure execution environment that cannot be accessed by user application software; a one or more secure data path processing agents configured to: (i) execute in the secure environment, (ii) monitor communication activity for one or more of the I/O ports, (iii) generate a device data record that summarizes an aspect of the device I/O port communication activity, (iv) communicate the device data record via a trusted communication link over the wide area network connection port to a network element, the trusted communication link comprising a secure message receipt feedback loop wherein the one or more secure data path processing agents receives a successful transmission receipt from the network element for data records that are successfully transmitted to and verified by the network element, (v) track transmitted device data records and successful transmission receipts received from the network element, and (vi) if one or more successful transmission receipts are not received for corresponding transmitted device data records within a specified event interval after sending the device data record to the network element over the trusted communication link, then restrict access of one or more device I/O ports; and a secure data path between the one or more secure data path processing agents and the one or more I/O ports that cannot be accessed by device user application software. In some such embodiments, the restriction of access for one or more device I/O ports still allows the communications device to communicate with a network element configured to provide the device with error handling service when a secure message receipt feedback loop error condition exists. In some such embodiments, the specified event interval comprises a period of time, a number of records transmitted, or a number of communications with the network element.

In some embodiments, the secure execution environment and one or more secure data path processing agents are located in a secure execution partition controlled by an application processor. In some embodiments, the secure execution environment and one or more secure data path processing agents are located in a secure execution partition controlled by a modem processor. In some embodiments, the secure execution environment and one or more secure data path processing agents are located on a SIM card.

In some embodiments, the aspect of the device I/O port communication activity that is summarized in the device data record comprises a summary of device application access activity. In some embodiments, the aspect of the device I/O port communication activity that is summarized in the device data record comprises a summary of device network access activity. In some embodiments, the aspect of the device I/O port communication activity that is summarized in the device data record comprises a summary of device content communication activity.

In some embodiments, a network system comprises: a trusted communication link over a wide area network to a one or more secure data path processing agents for the purpose of receiving device data records, the device data records comprising a summary of an aspect of the device I/O port communication activity, the trusted communication link comprising a secure message receipt feedback loop wherein the network based system transmits a successful transmission receipt to the one or more secure data path processing agents for data records that are successfully received by and verified by the network based system; and a storage system to store the device data records. In some embodiments, the

network system further comprises an error handling processor that detects when an error condition exists with the secure message receipt feedback loop, and, after detecting an error, flags the error condition to an administrator or error tracking system. In some embodiments, the network system further comprises a system to communicate with the device during an error condition to analyze the error condition or provide error messages to a device user.

In some embodiments, the network system further comprises a device data record analyzer configured to: (i) store a device I/O port communication activity policy comprising allowable device I/O port communication behavior, (ii) compare device data records to the I/O port communication activity policy, and (iii) declare an I/O port activity error condition when the device data records indicate I/O port communication activity that is outside of the behavioral limits specified in the I/O port communication activity policy.

In some embodiments, the aspect of the device I/O port communication activity that is summarized in the device data record comprises a summary of device application access activity. In some embodiments, the aspect of the device I/O port communication activity that is summarized in the device data record comprises a summary of device network access activity. In some embodiments, the aspect of the device I/O port communication activity that is summarized in the device data record comprises a summary of device content communication activity.

Exemplary Combinations Using a SIM Card

In some embodiments, a communications device comprises: one or more communication I/O ports comprising at least a wide area network connection port; storage for storing a device communication activity policy; and a SIM card configured with: (i) a secure execution environment that is not accessible by user application software, (ii) one or more secure data path processing agents configured to execute in the secure execution environment and act on device data path communication to one or more of the I/O ports to enforce the device communication activity policy, and (iii) a trusted data path link for data path communication from the one or more secure data path processing agents to one or more I/O port modems, the one or more I/O port modems comprising a secure modem processor execution environment that is not accessible by user application software. In some embodiments, the one or more secure data path processing agents are further configured with a trusted communication link over the wide area network connection port to a network element.

In some such embodiments, the device communication activity policy is a device I/O port communication reporting policy, and the one or more secure data path processing agents are further configured to: (i) monitor and/or report communication activity conducted on the one or more I/O ports, (ii) create device data records that summarize the communication activity, and (iii) transmit the device data records to the network element over the trusted communication link. In some embodiments, the monitoring and/or reporting of communication activity comprises monitoring data usage. In some embodiments, the monitoring and/or reporting of data usage comprises a classification of the network destinations accessed in association with the data usage. In some embodiments, the monitoring and/or reporting of data usage comprises a classification of the device applications generating the data usage. In some embodiments, monitoring communication activity comprises monitoring roaming service usage. In some embodiments, monitoring communication activity comprises monitoring service usage for one or more QoS classes. In some embodiments, monitoring communication activity comprises monitoring voice usage.

In some embodiments, the service processor is further configured to gather application information from device agents.

In some embodiments, the device communication activity policy is device I/O port communication control policy and the service processor is further configured to: (i) monitor communication activity conducted on the one or more I/O ports, and (ii) enforce I/O port communication policy on the one or more I/O ports.

In some embodiments, the communication control policy specifies a control policy for one or more network destinations. In some embodiments, the communication control policy specifies a control policy for one or more device applications. In some embodiments, the communication control policy specifies a control policy for a roaming network. In some embodiments, the communication control policy specifies a control policy for a QoS service class.

In some embodiments, the trusted data path communication between the one or more secure data path processing agents and the one or more I/O port modems is secured by signing or encrypting with a shared key. In some embodiments, the one or more secure data path processing agents are further configured with a trusted communication link over the wide area network connection port to a network element, and the shared key is acquired from the network element.

Although the foregoing embodiments have been described in some detail for purposes of clarity of understanding, the invention is not limited to the details provided. There are many alternative ways of implementing the invention. The disclosed embodiments are illustrative and not restrictive.

What is claimed is:

1. A wireless communications device comprising:

an application execution environment and network stack to provide wireless network access for user application software executing in the application execution environment;

a policy enforcement client to implement a device communication activity policy applicable to wireless network access provided for the user application software;

a wireless modem chipset in network data path communication with the network stack, the wireless modem chipset including

a secure execution environment configured to be inaccessible to the user application software, the secure execution environment including signal processing elements and

one or more secure data path processing agents configured to:

execute in the secure execution environment,

monitor a device data communications activity that utilizes the wireless modem chipset to receive and transmit data passing between the network stack and a wireless network,

generate a device data record comprising information about the monitored device data communications activity, the information configured to assist a network element in determining whether the wireless communications device is operating or has operated in accordance with the device communication activity policy, and

send the device data record to the network element over a trusted communication link between the one or more data path processing agents and the network element; and

a trusted data path between the one or more secure data path processing agents and the signal processing elements wide area network port.

2. The wireless communications device of claim **1**, wherein the secure data path processing agents further comprise a device data record mailbox, the device data record mailbox relaying the device data records to an agent outside of the secure execution environment for transmission to the network element.

3. The wireless communications device of claim **1**, further comprising a subscriber identity module (SIM), wherein at least a portion of the SIM is within the secure execution environment.

4. The wireless communications device of claim **3**, wherein the agent configured to generate the device data record resides on the SIM.

5. The wireless communications device of claim **4**, wherein the network data path between the network stack and the wireless modem chipset passes through the SIM, and the secure data path processing agents further comprise a data path security verifier in the wireless modem chipset.

6. The wireless communications device of claim **5**, wherein the data path security verifier restricts network access to allow only monitored device data communications activity.

7. The wireless communications device of claim **1**, further comprising an applications processor unit section that is within the secure execution environment.

8. The wireless communications device of claim **7**, wherein the agent configured to generate the device data record resides within the applications processor unit section.

9. The wireless communications device of claim **8**, wherein the network data path between the network stack and the wireless modem chipset passes through the applications processor unit section, and the secure data path processing agents further comprise a data path security verifier in the wireless modem chipset.

10. The wireless communications device of claim **9**, wherein the data path security verifier restricts network access to allow only monitored device data communications activity.

* * * * *