(19) **Japan Patent Office (JP)** (12) **Registered Utility Model Gazette (U)** (11) Utility Model Registration Number
Utility Model Registration No. 3212460 (U3212460)

(45) Issuance Date **Sep. 14, 2017** (24) **Registration Date** Aug. 23, 2017

(51) Int.Cl.
A43B 11/00 (2006.01)
A43B 23/02 (2006.01)

F1
A43B 11/00
A43B 23/02 101B

Request for registrability report: not requested No. of claims: 7 OL (total 19 pages)

(21) Application No.: Utility Model Application 2017-2456 (U2017-2456)
(22) Filing Date: May 31, 2017

(73) Owner of utility model right 592176860
TAKAHASHI, Naomichi
6-21-26 Aoi, Adachi-ku, Tokyo
(74) Agent 100089026
Pat. Atty. KIMURA, Takaaki
(74) Agent 100091580
Pat. Atty. MIYAO, Masafumi
(72) Creator TAKAHASHI, Naomichi
6-21-26 Aoi, Adachi-ku, Tokyo

(54)[Title of the Device] Shoe

(57)[Abstract] (with amendment)
[Problem] To provide a shoe that can be easily put on without widening the area of the opening of the shoe.
[Solution] A shoe 10 including a shoe opening that opens to make it possible to insert a person's foot, where a heel portion 17 including a rear edge 18b of an opening edge 18a of the shoe opening is provided with a guide portion 26 sloping upward as it goes away from the rear edge 18b.
[Selected Figure] FIG. 1

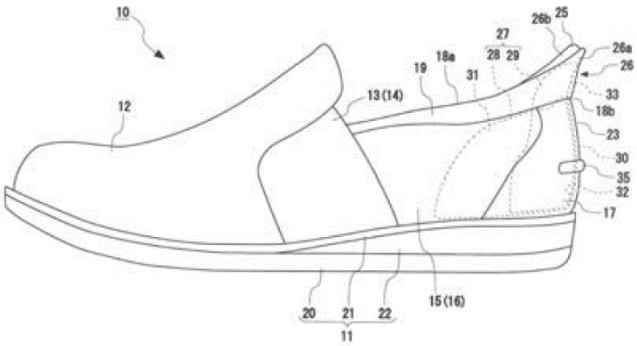

[**Claims of Utility Model Registration**]

[Claim 1]

A shoe, comprising a heel guide portion spreading at the rear of a body, at an upper end of a heel curve portion that is a rear end of an opening for inserting a user's foot.

[Claim 2]

The shoe according to claim 1, wherein the heel guide portion is provided at the rear end of a top line forming the periphery of the opening and has an extending portion extending to the rear of the body, and the extending portion has an upper-surface inwardly-sloping portion for supporting a heel from a lower side and guiding the insertion of the foot into the inside of the body when a user inserts the foot into the body from the opening.

[Claim 3]

The shoe according to claim 1 or 2, wherein a counter comprising a guide core portion for maintaining the shape of the heel guide portion is mounted inside the heel curve portion.

[Claim 4]

The shoe according to claim 3, wherein the upper end of the guide core portion is provided with a slit opening upward.

[Claim 5]

The shoe according to claim 3 or 4, wherein the counter comprises a first counter having a lateral surface portion wrapping around from a concave curved surface portion to the left and the right, as well as a second counter disposed inside the first counter and having an overlapping concave curved surface portion following the concave curved surface portion, and the guide core portion.

[Claim 6]

The shoe according to claim 5, wherein the second counter is soft compared to the first counter.

[Claim 7]

The shoe according to any one of claims 1-6, wherein an outer surface of the heel portion is provided with a hooking portion projecting outward to wrap around in the width direction of the heel curve portion.

[Detailed Description of the Device]

[Technical Field]

[0001]

The present device relates to a shoe that can be easily put on without using a shoehorn or the like.

[Background Art]

[0002]

In recent years, a shoe has been known which can be easily put on by sliding a foot in without the use of shoehorn or the action such as bending down to put on the shoe.

[0003]

A shoe known as an example of such a shoe that can be put on without using a shoehorn includes a rigid portion where a guide portion sloping from an opening edge of a shoe opening to become lower toward the front is formed at a heel portion including the rear edge of the opening edge of the shoe opening, and a flexible member of uniform thickness on the inside of the shoe as opposed to the rigid portion, allowing the foot-bottom of the heel part to slide in at the time of putting on (for example, see Patent Literature 1).

[Prior Art Literature]

[Patent Literature]

[0004]

[Patent Literature 1] Utility Model Registration No. 3149834

[Summary of the Device]

[Problems to be Solved by the Device]

[0005]

However, in the art disclosed in the aforementioned Patent Literature 1, a rigid portion is provided which has a portion sloping toward the lower side of the opening edge of the shoe opening, so a problem arises that the shoe is difficult to put on unless the opening area of the shoe opening is large.

[0006]

An objective of the present device is to provide a shoe that can be easily put on without enlarging the opening area of the shoe opening.

[Means for Solving the Problems]

[0007]

To solve the aforementioned problem, the device described in claim 1 is a shoe including a shoe opening that opens to make it possible to insert a person's foot, where the shoe includes a guide portion sloping upward as it goes away from the rear edge, at a heel portion including a rear edge of an opening edge of the shoe opening.

[0008]

In other words, the shoe includes the shoe opening that opens to make it possible to insert a person's foot. Here, the heel portion including the rear edge of the opening edge of the shoe opening is provided with a guide portion sloping upward as it goes away from the rear edge of the shoe opening.

[0009]

In the device described in claim 2, the guide portion slopes in a direction opposite to the heel curve sloping inward as it approaches the rear edge.

[0010]

In other words, the heel portion is provided with a heel curve sloping inward as it approaches the rear edge to hold a person's heel and make it difficult for the shoe to slip off, and the guide portion slopes in a direction opposite to the heel curve.

[0011]

In the device described in claim 3, the heel portion includes a counter integrally having an inward-facing concave curved surface portion to support the person's heel, and the counter includes a guide core portion for maintaining the shape of the guide portion.

[0012]

In other words, the heel portion is provided with a counter integrally having an inward-facing concave curved surface portion to support the person's heel, and the counter is provided with a guide core portion for maintaining the shape of the guide portion.

[0013]

In the device described in claim 4, the guide core portion is in the shape of semicircle when viewed from the front, and its apex is provided with a slit that opens toward the upper edge.

[0014]

In other words, a slit that opens toward the upper edge is formed at the apex of the guide core portion that is in the shape of semicircle when viewed from the front.

[0015]

In the device described in claim 5, the counter is a double structure including a first counter having a lateral surface portion that wraps around from a concave curved surface portion to the left and the right, as well as a second counter located inside the first counter and integrally having an overlapping concave curved surface portion following the concave curved surface portion, and a guide core portion.

[0016]

In other words, the counter is a double structure, the first counter is provided with a lateral surface portion wrapping around from the concave curved surface portion to the left and the right, and the second counter located inside the first counter is integrally provided with an overlapping concave curved surface portion following the concave curved surface portion, and a guide core portion.

[0017]

In the device described in claim 6, the second counter is soft compared to the first counter.

[0018]

In other words, the hardness of the second counter having the guide core portion is soft compared to the first counter. In this case, the second counter may be softened by, for example being made thinner than the first counter, or by using a different material.

[0019]

In the device described in claim 7, the outer surface of the heel portion is provided with a hooking portion projecting outward to wrap around to the left and the right of the heel portion.

[0020]

In other words, the hooking portion is provided in such a manner that it projects outward to wrap around to the left and the right of the heel portion as the outer surface of the heel portion.

[Effects of the Device]

[0021]

The device described in claim 1 is a shoe including a shoe opening that opens to make it possible to insert a person's foot, where the shoe includes a guide portion sloping upward as it goes away from the rear edge, at a heel portion including a rear edge of an opening edge of the shoe opening.

[0022]

In other words, the shoe includes a shoe opening that opens to make it possible to insert a person's foot. Here, by providing the heel portion that includes the rear edge of the opening edge of the shoe opening with the guide portion that slopes upward as it goes away from the rear edge of the shoe opening, the ease of putting on the shoe can be improved without enlarging the opening area of the shoe opening.

[0023]

In the device described in claim 2, the guide portion slopes in a direction opposite to the heel curve sloping inward as it approaches the rear edge.

[0024]

In other words, the heel portion is provided with the heel curve sloping inward as it approaches the rear edge in order to hold a person's heel and make it difficult for the shoe to slip off, so by having a guide portion that slopes in a direction opposite to the heel curve, the heel guide angle of the guide portion can be easily set.

[0025]

In the device described in claim 3, the heel portion includes a counter integrally having an inward-facing concave curved surface portion to support the person's heel, and the counter includes a guide core portion for maintaining the shape of the guide portion.

[0026]

In other words, by providing the heel portion with the counter that integrally has an inward-facing concave curved surface portion to support the person's heel, and providing the counter with the guide core portion that is used to maintain the shape of the guide portion, the ease of putting on a shoe can be further improved while maintaining the shape of the heel portion.

[0027]

In the device described in claim 4, the guide core portion is in the shape of semicircle when viewed from the front, and a slit that opens toward the upper edge is formed at the apex of the guide core portion.

[0028]

In other words, by forming the slit that opens toward the upper edge at the apex of the guide core portion that is in the shape of semicircle when viewed from the front, the guide core portion can be easily deformed at the time of putting on the shoe, and the ease of putting on the shoe can be improved.

[0029]

In the device described in claim 5, the counter is a double structure including a first counter having a lateral surface portion that wraps around from the concave curved surface portion to the left and the right, and a second counter located inside the first counter and integrally having an overlapping concave curved surface portion following the concave curved surface portion, and a guide core portion.

[0030]

In other words, by having the double-structured counter, providing the first counter with the lateral surface portion that wraps around from the concave curved surface portion to the left and the right, and integrally providing the second counter located inside the first counter with an overlapping concave curved surface portion following the concave curved surface portion and a guide core portion, the shape of the curved surface of the heel portion can be easily ensured.

[0031]

In the device described in claim 6, the second counter is soft compared to the first counter.

[0032]

In other words, by having a second counter that includes the guide core portion and whose hardness is soft compared to that of the first counter, the shape of the curved surface of the heel portion can be easily ensured, and the deformation of the guide core portion can be allowed to improve the ease of putting on the shoe.

[0033]

In the device described in claim 7, the outer surface of the heel portion is provided with a hooking portion that projects outward to wrap around to the left and the right of the heel portion.

[0034]

In other words, by providing the hooking portion in such a manner that it projects outward to wrap around to the left and the right of the heel portion as the outer surface of the heel portion, and by having the other foot hooked on the hooking portion, the shoe can be easily taken off.

[Brief Description of the Drawings]

[0035]

[FIG. 1] a side view of a shoe showing an embodiment of the present device.

[FIG. 2] a plan view of a shoe showing an embodiment of the present device.

[FIG. 3] a rear view of a shoe showing an embodiment of the present device.

[FIG. 4] a second counter applied to a shoe showing an embodiment of the present device, where FIG. 4(A) is a front view of the second counter, and FIG. 4(B) is a sectional view of the second counter.

[FIG. 5] a diagram illustrating the action at the time of putting on a shoe showing an embodiment of the present device, where FIG. 5(A) is a diagram illustrating the action during putting on, and FIG. 5(B) is a diagram illustrating the actions when the shoe is on.

[Embodiments of the Device]

[0036]

Hereinafter, a shoe in an embodiment of the present device will be described with reference to attached drawings.

[0037]

As shown in FIGs. 1-3, a shoe 10 includes a sole 11 constituting the so-called shoe-bottom; an upper (upper leather) 12 located on the toe side to cover the instep of a foot; a pair of stretchable portions 13, 14 located on both the left side and the right side to allow the deformation of the upper 12; sides 15, 16 covering both the left side and the right side of the foot; a heel portion 17 covering the heel parts of the sides 15, 16; and a decorative band 19 provided on the upper edges of the sides 15, 16 to form the left, the right and the rear of a shoe opening 18.

[0038]

In this embodiment, the sole 11 includes an outsole 20 on the ground side, a midsole 21 on the outsole 20, and a cushion sole 22 located between the outsole 20 and the midsole 21 from the middle of front-rear direction to the heel side.

[0039]

The outsole 20 is made of a relatively hard rubber material or the like, and anti-slip irregularities (not shown) are formed on the bottom surface as needed. Note that the outsole 20 may be made of genuine leather or the like in addition to the rubber material.

[0040]

The midsole 21 has substantially the same shape as the outsole 20, and supports the lower edges of the upper 12 and the sides 15, 16 by sewing, melting-adhering, bonding, or the like.

[0041]

The midsole 21 is made of a rubber material or the like that is softer than the outsole 20. Note that the midsole 21 may be made of genuine leather or the like in addition to the rubber material.

[0042]

The cushion sole 22 is composed of a cushion body whose thickness is set in such a manner that the whole of the sole 11 becomes higher toward the heel side. The bottom surface and upper surface of the cushion sole 22 are joined to the outsole 20 and the midsole 21 by adhesion or the like. Note that instead of the cushion sole 22, a heel projecting from the bottom surface of the outsole 20 may be provided.

[0043]

The upper 12 covers the whole instep from the toes of a person's foot to the front side of the ankle. Note that the toe portion of the upper 12 is formed with a toe room to ensure clearance and design. In this embodiment, the upper 12 is made of cloth, but it may also be made of genuine leather, synthetic leather, artificial leather, enameled leather, etc..

[0044]

When the lower edge of the upper 12 is joined to the midsole 21, an appropriate method can be used depending on the material used, etc. The rear edge of the upper 12 is a free end capable of being displaced and deformed (warped) upward during the insertion of foot, and constitutes the front side of the shoe opening 18.

[0045]

The stretchable portions 13, 14 may be made of, for example, a stretchable cloth or rubber sheet of a similar color to the upper 12. Additionally, from the viewpoint of design, the stretchable portions 13, 14 may be made of a material of a different color.

[0046]

The stretchable portions 13, 14 have their upper edges joined to the side edges of the upper 12 by sewing etc., and their lower edges joined to the midsole 21 by adhesion etc..

[0047]

The sides 15, 16 cover lateral sides located at the rear of a person's foot compared to the instep. In this embodiment, the sides 15, 16 are made of a cloth of a color that is similar to or different from the upper 12, but they may also be made of genuine leather, synthetic leather, artificial leather, enameled leather, etc.. Note that the sides 15, 16 may also be formed by combining the left and the right into a whole to overlap the inside of the heel portion 17.

[0048]

When the lower edges of the sides 15, 16 are joined to the midsole 21, an appropriate method can be used depending on the material used, etc.. The front of the sides 15, 16 partly overlaps the rear of the upper 12 and the stretchable portions 13, 14.

[0049]

The heel portion 17 is formed from the same color and material as those of the sides 15, 16, and overlaps in the vicinity of the edge and is joined by sewing. At the heel portion 17, a heel curve 23 is integrally formed which is concave on the inside (convex on the outside) to follow the heel of a person's foot.

[0050]

Note that when the sides 15, 16 go around to become one piece and their heel parts overlaps the heel portion 17, the same heel curve is formed also at the sides 15, 16.

[0051]

The heel curve 23 may be formed so that its outer shape at rear end is a concave cup shape when viewed from lateral side, or may slope upward and inward from the midsole 21 side in a substantially linear manner.

[0052]

In other words, the term "curve" here is not limited to a curve (arc) in a strict sense. Note that in either case, the vicinity of the upper edge forming the shoe opening 18 inclines inward, thereby holding (hooking) the heel to prevent the shoe from slipping off unexpectedly.

[0053]

On the other hand, as shown in FIG. 2, the upper surface of the midsole 21 is provided with an insole (inner sole) 24 with cushioning property and moisture-absorbing property (including antibacterial property). The insole 24 may be of uniform thickness, or may have a thickness that varies to come into contact with the arch of the foot.

[0054]

The inner surfaces of the sides 15, 16 and the heel portion 17 are provided with a lining (covering for inside surface) 25. The material and thickness of the lining 25 are set to have an appropriate cushioning property. In this embodiment, two or more layers of cloth (inner surface skin), cushion body (e.g., sponge) or the like are used, but a flexible material with good moisture-absorbing property, such as pigskin, may also be used.

[0055]

The decorative band 19 is a decorative outer surface skin joined to the upper edges of the sides 15, 16 and the heel portion 17, and the back surface (inner surface) side is provided with a lining 25. Therefore, the decorative band 19 essentially forms the shoe opening 18.

[0056]

The decorative band 19 includes a part continuing upward from a heel portion 17, i.e., at a heel portion 17 including a rear edge 18b of an opening edge 18a of a shoe opening 18, a guide portion 26 slopes upward as it goes away from the rear edge 18b.

[0057]

In this embodiment, the decorative band 19 is provided, and thereby the opening edge 18a of the shoe opening 18 is formed by the upper edge of the decorative band 19. Note that the rear edge 18b is numbered in FIG. 1 as a rear edge without the decorative band 19.

[0058]

In other words, the decorative band 19 also functions as the stitch of the perimeter, excluding the portion formed by the upper 12, of the shoe opening 18. Therefore, when the decorative function and the stitch function are not necessary, it is also possible to form the shoe opening 18 by the vicinity of the upper edges of the sides 15, 16 and the heel portion 17, and eliminate the decorative band 19.

[0059]

As shown by the dashed line in FIG. 1, a counter 27 is disposed between the heel portion 17 and the lining 25. The counter 27 is a double structure including a first counter 28 and a second counter 29 that at least partly overlap each other.

[0060]

The first counter 28 integrally has a concave curved surface portion 30 that is inwardly concave to support the heel of a person, and a lateral surface portion 31 that go around from the concave curved surface portion 30 to the left and the right, and is in the shape of a three-dimensional curved plate formed to follow the outer periphery of the heel of the foot.

[0061]

The first counter 28 is made of a relatively hard resin material or a material formed by using a (compressed) leather as a base material and spraying a resin powder material onto it.

[0062]

Note that for the resin material or the resin powder material, a thermoplastic resin such as a thermoplastic polyurethane (TPU), a polyamide elastomer (PAE) and an ABS resin can be used.

[0063]

The second counter 29 integrally has an overlapping concave curved surface portion 32 located inside the first counter 28 to follow the concave curved surface portion 30, and a guide core portion 33.

[0064]

The guide core portion 33 slopes in a direction opposite to the heel curve 23 sloping inward as it approaches the rear edge 18b. Thereby, the shape retention of the guide portion 26 sloping in a direction opposite to the heel curve 23 sloping inward as it approaches the rear edge 18b is maintained at a high level.

[0065]

The guide core portion 33 is in the shape of semicircle when viewed from the front, and a slit 34 that opens toward the upper edge is formed at the apex of the guide core portion.

[0066]

The guide portion 26 slopes in a direction opposite to the heel curve 23 sloping inward as it approaches the rear edge 18b.

[0067]

The second counter 29 is soft compared to the first counter 28. As for the term “soft” here, for example, it is possible to be softened by being made thinner than the first counter 28, or by using a different material.

[0068]

Note that the second counter 29 is formed by, for example, a shape-memory resin (shape-memory polymer). Thereby, even if the guide core portion 33 is deformed by a person’s foot, it can return to its original state (shape) by heating.

[0069]

As the material of the shape-memory resin, trans-isoprene, polynobornene, styrene-butadiene copolymer, polyurethane, etc. can be used.

[0070]

Note that the outer surface of the heel portion 17 may be provided with a hooking portion 35 projecting outward to go around to the left and the right of the heel portion 17.

[0071]

In such structure, as shown in FIG. 5(A), when the shoe 10 is put on and a foot is inserted from the shoe opening 18, the foot can be easily put in as shown in FIG. 5(B) by providing near the heel a guide portion 26 for guiding the foot in.

[0072]

Thus, the shoe 10 includes a shoe opening 18 that opens to make it possible to insert a person's foot.

[0073]

Here, by providing the heel portion 17 that includes the rear edge 18b of the opening edge 18a of the shoe opening 18 with the guide portion 26 that slopes upward as it goes away from the rear edge 18b of the shoe opening 18, the ease of putting on the shoe can be improved without enlarging the opening area of the shoe opening 18.

[0074]

The guide portion 26 slopes in a direction opposite to the heel curve 23 sloping inward as it approaches the rear edge 18b.

[0075]

Thus, the heel portion 17 is provided with a heel curve 23 sloping inward as it approaches the rear edge 18b to hold a person's heel and make it difficult for the shoe to slip off, so by providing a guide portion 26 that slopes in a direction opposite to the heel curve 23, the heel guide angle of the guide portion 26 can be easily set.

[0076]

The heel portion 17 includes a counter 27 integrally having an inward-facing concave curved surface portion 30 to support a person's heel, and the counter 27 includes a guide core portion 33 for maintaining the shape of the guide portion 26.

[0077]

Thus, by providing the heel portion 17 with the counter 27 that integrally has an inward-facing concave curved surface portion 30 to support the person's heel, and providing the counter 27 with the guide core portion 33 that is used to maintain the shape of the guide portion 26, the ease of putting on a shoe can be further improved while maintaining the shape of the heel portion 17.

[0078]

The guide core portion 33 is in the shape of semicircle when viewed from the front, and a slit 34 that opens toward the upper edge is formed at the apex of the guide core portion.

[0079]

Thus, by forming the slit 34 that opens toward the upper edge at the apex of the guide core portion 33 that is in the shape of semicircle when viewed from the front, the guide core portion 33 can be easily deformed when the shoe is put on, and the ease of putting on the shoe can be improved.

[0080]

The counter 27 is a double structure including a first counter 28 having a lateral surface portion that goes around from the concave curved surface portion 30 to the left and the right, as well as a second counter 29 integrally having an overlapping concave curved surface portion 32 that is located inside the first counter 28 to follow the concave curved surface portion 30 and a guide core portion 33, and thereby the shape of the concave curved surface of the heel portion 17 can be easily ensured.

[0081]

Thus, by having the double-structured counter 27, providing the first counter 28 with the lateral surface portion 31 that wraps around from the concave curved surface portion 30 to the left and the right, and integrally providing the second counter 29 located inside the first counter 28 with an overlapping concave curved surface portion 32 following the concave curved surface portion 30 and a guide core portion 33, the shape of the curved surface of the heel portion 17 can be easily ensured.

[0082]

The second counter 29 is soft compared to the first counter 28.

[0083]

Thus, by having a second counter 29 that includes the guide core portion 33 and whose hardness is soft compared to that of the first counter 28, the shape of the curved surface of the heel portion 17 can be easily ensured, and the deformation of the guide core portion 33 can be allowed to improve the ease of putting on the shoe.

[0084]

The outer surface of the heel portion 17 is provided with a hooking portion 35 projecting outward to go around to the left and the right of the heel portion 17.

[0085]

Thus, by providing the hooking portion 35 in such a manner that it projects outward to wrap around to the left and the right of the heel portion 17 as the outer surface of the heel portion 17, and by having the other foot hooked on the hooking portion 35, the shoe can be easily taken off.

[Reference to the Numerals]

[0086]

10	shoe
11	sole
12	upper
13	stretchable portion
14	stretchable portion
15	side
16	side
17	heel portion
18	shoe opening
18a	opening edge
18b	rear edge
19	decorative band
20	outsole
21	midsole
22	cushion sole
23	heel curve
24	insole
25	lining
26	guide portion
27	counter
28	first counter
29	second counter
30	concave curved surface portion
31	side surface
32	overlapping concave curved surface portion
33	guide core portion
34	slit
35	hooking portion

[FIG. 1]

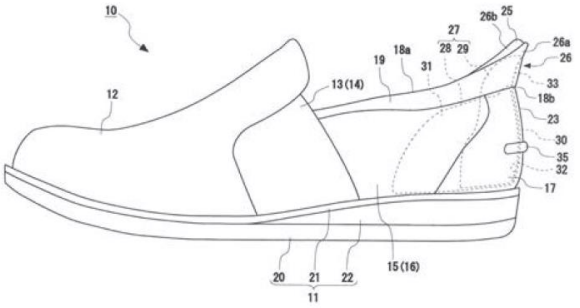

[FIG. 2]

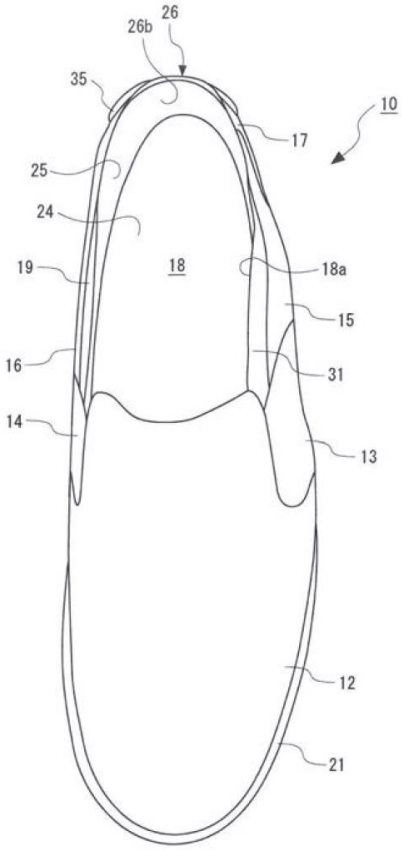

[FIG. 3]

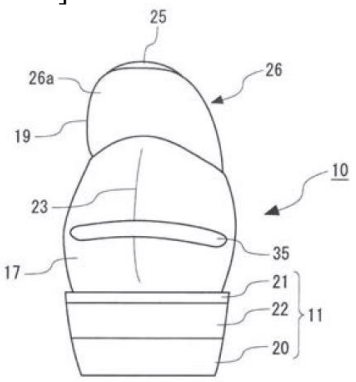

[FIG. 4]

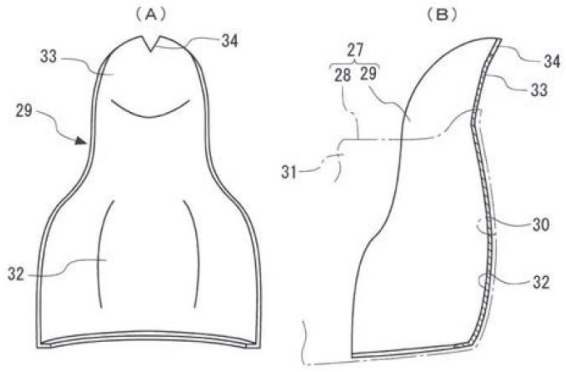

[FIG. 5]

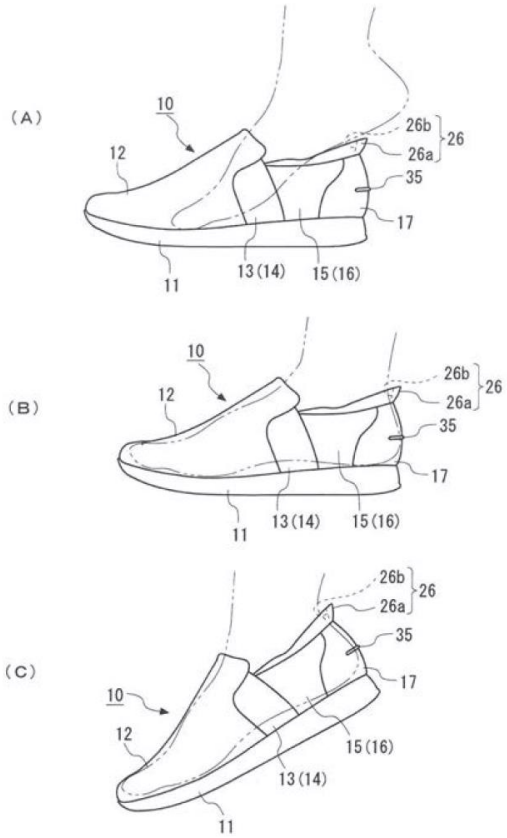

[Written amendment of procedure]
[Date of submission] July 12, 2017
[Procedure amendment 1]
[Name of document to be amended] Specification
[Name of item to be amended] Full text
[Method for amendment] Modification
[Content of amendment]
[Detailed Description of the Device]
[Technical Field]
[0001]
The present device relates to a shoe that can be easily put on without using a shoehorn or the like.
[Background Art]
[0002]
In recent years, a shoe has been known which can be easily put on by sliding a foot in without the use of shoehorn or the action such as bending down to put on the shoe.
[0003]
A shoe known as an example of such a shoe that can be put on without using a shoehorn includes a rigid portion where a guide portion sloping from an opening edge of a shoe opening to become lower toward the front is formed at a heel portion including the rear edge of the opening edge of the shoe opening, and a flexible member of uniform thickness on the inside of the shoe as opposed to the rigid portion, allowing the foot-bottom of the heel part to slide in at the time of putting on (for example, see Patent Literature 1).
[Prior Art Literature]
[Patent Literature]
[0004]
[Patent Literature 1] Utility Model Registration No. 3149834
[Summary of the Device]
[Problems to be Solved by the Device]
[0005]
However, in the art disclosed in the aforementioned Patent Literature 1, a rigid portion is provided which has a portion sloping toward the lower side of the opening edge of the shoe opening, so a problem arises that the shoe is difficult to put on unless the opening area of the shoe opening is large.
[0006]
An objective of the present device is to provide a shoe that can be easily put on without enlarging the opening area of the shoe opening.
[Means for Solving the Problems]
[0007]
To solve the aforementioned problem, the device described in claim 1 is a shoe including a shoe opening that opens to make it possible to insert a person's foot, where the shoe includes a guide portion sloping upward as it goes away from the rear edge, at a heel portion including a rear edge of an opening edge of the shoe opening.
[0008]
In other words, the shoe includes the shoe opening that opens to make it possible to insert a person's foot. Here, the heel portion including the rear edge of the opening edge of the shoe opening is provided with a guide portion sloping upward as it goes away from the rear edge of the shoe opening.
[0009]
In the device described in claim 2, the guide portion slopes in a direction opposite to the heel curve sloping inward as it approaches the rear edge.
[0010]
In other words, the heel portion is provided with a heel curve sloping inward as it approaches the rear edge to hold a person's heel and make it difficult for the shoe to slip off, and the guide portion slopes in a direction opposite to the heel curve.

[0011]

In the device described in claim 3, the heel portion includes a counter integrally having an inward-facing concave curved surface portion to support the person's heel, and the counter includes a guide core portion for maintaining the shape of the guide portion.

[0012]

In other words, the heel portion is provided with a counter integrally having an inward-facing concave curved surface portion to support the person's heel, and the counter is provided with a guide core portion for maintaining the shape of the guide portion.

[0013]

In the device described in claim 4, the guide core portion is in the shape of semicircle when viewed from the front, and its apex is provided with a slit that opens toward the upper edge.

[0014]

In other words, a slit that opens toward the upper edge is formed at the apex of the guide core portion that is in the shape of semicircle when viewed from the front.

[0015]

In the device described in claim 5, the counter is a double structure including a first counter having a lateral surface portion that wraps around from an inward-facing concave curved surface portion to the left and the right to support a user's heel, as well as a second counter located inside the first counter and integrally having an overlapping concave curved surface portion following the concave curved surface portion, and a guide core portion.

[0016]

In other words, the counter is a double structure, the first counter is provided with a lateral surface portion wrapping around from the concave curved surface portion to the left and the right, and the second counter located inside the first counter is integrally provided with an overlapping concave curved surface portion following the concave curved surface portion, and a guide core portion.

[0017]

In the device described in claim 6, the second counter is soft compared to the first counter.

[0018]

In other words, the hardness of the second counter having the guide core portion is soft compared to the first counter. In this case, the second counter may be softened by, for example being made thinner than the first counter, or by using a different material.

[0019]

In the device described in claim 7, the outer surface of the heel curve portion is provided with a hooking portion projecting outward to wrap around to the left and the right of the heel curve portion.

[0020]

In other words, the hooking portion is provided in such a manner that it projects outward to wrap around to the left and the right of the heel curve portion as the outer surface of the heel curve portion.

[Effects of the Device]

[0021]

The device described in claim 1 is a shoe including a shoe opening that opens to make it possible to insert a person's foot, where the shoe includes a guide portion sloping upward as it goes away from the rear edge, at a heel portion including a rear edge of an opening edge of the shoe opening.

[0022]

In other words, the shoe includes a shoe opening that opens to make it possible to insert a person's foot. Here, by providing the heel portion that includes the rear edge of the opening edge of the shoe opening with the guide portion that slopes upward as it goes away from the rear edge of the shoe opening, the ease of putting on the shoe can be improved without enlarging the opening area of the shoe opening.

[0023]

In the device described in claim 2, the guide portion slopes in a direction opposite to the heel curve sloping inward as it approaches the rear edge.

[0024]

In other words, the heel portion is provided with the heel curve sloping inward as it approaches the rear edge in order to hold a person's heel and make it difficult for the shoe to slip off, so by having a guide portion that slopes in a direction opposite to the heel curve, the heel guide angle of the guide portion can be easily set.

[0025]

In the device described in claim 3, the heel portion includes a counter integrally having an inward-facing concave curved surface portion to support the person's heel, and the counter includes a guide core portion for maintaining the shape of the guide portion.

[0026]

In other words, by providing the heel portion with the counter that integrally has an inward-facing concave curved surface portion to support the person's heel, and providing the counter with the guide core portion that is used to maintain the shape of the guide portion, the ease of putting on a shoe can be further improved while maintaining the shape of the heel portion.

[0027]

In the device described in claim 4, the guide core portion is in the shape of semicircle when viewed from the front, and a slit that opens toward the upper edge is formed at the apex of the guide core portion.

[0028]

In other words, by forming the slit that opens toward the upper edge at the apex of the guide core portion that is in the shape of semicircle when viewed from the front, the guide core portion can be easily deformed at the time of putting on the shoe, and the ease of putting on the shoe can be improved.

[0029]

In the device described in claim 5, the counter is a double structure including a first counter having a lateral surface portion that wraps around from the inward-facing concave curved surface portion to the left and the right to support a user's heel, and a second counter located inside the first counter and integrally having an overlapping concave curved surface portion following the concave curved surface portion, and a guide core portion.

[0030]

In other words, by having the double-structured counter, providing the first counter with the lateral surface portion that wraps around from the concave curved surface portion to the left and the right, and integrally providing the second counter located inside the first counter with an overlapping concave curved surface portion following the concave curved surface portion and a guide core portion, the shape of the curved surface of the heel portion can be easily ensured.

[0031]

In the device described in claim 6, the second counter is soft compared to the first counter.

[0032]

In other words, by having a second counter that includes the guide core portion and whose hardness is soft compared to that of the first counter, the shape of the curved surface of the heel portion can be easily ensured, and the deformation of the guide core portion can be allowed to improve the ease of putting on the shoe.

[0033]

In the device described in claim 7, the outer surface of the heel curve portion is provided with a hooking portion that projects outward to wrap around to the left and the right of the heel curve portion.

[0034]

In other words, by providing the hooking portion in such a manner that it projects outward to wrap around to the left and the right of the heel curve portion as the outer surface of the heel curve portion, and by having the other foot hooked on the hooking portion, the shoe can be easily taken off.

[Brief Description of the Drawings]

[0035]

[FIG. 1] a side view of a shoe showing an embodiment of the present device.

[FIG. 2] a plan view of a shoe showing an embodiment of the present device.

[FIG. 3] a rear view of a shoe showing an embodiment of the present device.

[FIG. 4] a second counter applied to a shoe showing an embodiment of the present device, where FIG. 4(A) is a front view of the second counter, and FIG. 4(B) is a sectional view of the second counter.

[FIG. 5] a diagram illustrating the action at the time of putting on a shoe showing an embodiment of the present device, where FIG. 5(A) is a diagram illustrating the action during putting on, and FIG. 5(B) is a diagram illustrating the actions when the shoe is on.

[Embodiments of the Device]

[0036]

Hereinafter, a shoe in an embodiment of the present device will be described with reference to attached drawings.

[0037]

As shown in FIGs. 1-3, a shoe 10 includes a sole 11 constituting the so-called shoe-bottom; an upper (upper leather) 12 located on the toe side to cover the instep of a foot; a pair of stretchable portions 13, 14 located on both the left side and the right side to allow the deformation of the upper 12; sides 15, 16 covering both the left side and the right side of the foot; a heel portion 17 covering the heel parts of the sides 15, 16; and a decorative band 19 provided on the upper edges of the sides 15, 16 to form the left, the right and the rear of a shoe opening 18.

[0038]

In this embodiment, the sole 11 includes an outsole 20 on the ground side, a midsole 21 on the outsole 20, and a cushion sole 22 located between the outsole 20 and the midsole 21 from the middle of front-rear direction to the heel side.

[0039]

The outsole 20 is made of a relatively hard rubber material or the like, and anti-slip irregularities (not shown) are formed on the bottom surface as needed. Note that the outsole 20 may be made of genuine leather or the like in addition to the rubber material.

[0040]

The midsole 21 has substantially the same shape as the outsole 20, and supports the lower edges of the upper 12 and the sides 15, 16 by sewing, melting-adhering, bonding, or the like.

[0041]

The midsole 21 is made of a rubber material or the like that is softer than the outsole 20. Note that the midsole 21 may be made of genuine leather or the like in addition to the rubber material.

[0042]

The cushion sole 22 is composed of a cushion body whose thickness is set in such a manner that the whole of the sole 11 becomes higher toward the heel side. The bottom surface and upper surface of the cushion sole 22 are joined to the outsole 20 and the midsole 21 by adhesion or the like. Note that instead of the cushion sole 22, a heel projecting from the bottom surface of the outsole 20 may be provided.

[0043]

The upper 12 covers the whole instep from the toes of a person's foot to the front side of the ankle. Note that the toe portion of the upper 12 is formed with a toe room to ensure clearance and design. In this embodiment, the upper 12 is made of cloth, but it may also be made of genuine leather, synthetic leather, artificial leather, enameled leather, etc..

[0044]

When the lower edge of the upper 12 is joined to the midsole 21, an appropriate method can be used depending on the material used, etc. The rear edge of the upper 12 is a free end capable of being displaced and deformed (warped) upward during the insertion of foot, and constitutes the front side of the shoe opening 18.

[0045]

The stretchable portions 13, 14 may be made of, for example, a stretchable cloth or rubber sheet of a similar color to the upper 12. Additionally, from the viewpoint of design, the stretchable portions 13, 14 may be made of a material of a different color.

[0046]

The stretchable portions 13, 14 have their upper edges joined to the side edges of the upper 12 by sewing etc., and their lower edges joined to the midsole 21 by adhesion etc..

[0047]

The sides 15, 16 cover lateral sides located at the rear of a person's foot compared to the instep. In this embodiment, the sides 15, 16 are made of a cloth of a color that is similar to or different from the upper 12, but they may also be made of genuine leather, synthetic leather, artificial leather, enameled leather, etc.. Note that the sides 15, 16 may also be formed by combining the left and the right into a whole to overlap the inside of the heel portion 17.

[0048]

When the lower edges of the sides 15, 16 are joined to the midsole 21, an appropriate method can be used depending on the material used, etc.. The front of the sides 15, 16 partly overlaps the rear of the upper 12 and the stretchable portions 13, 14.

[0049]

The heel portion 17 is formed from the same color and material as those of the sides 15, 16, and overlaps in the vicinity of the edge and is joined by sewing. At the heel portion 17, a heel curve 23 is integrally formed which is concave on the inside (convex on the outside) to follow the heel of a person's foot.

[0050]

Note that when the sides 15, 16 go around to become one piece and their heel parts overlaps the heel portion 17, the same heel curve is formed also at the sides 15, 16.

[0051]

The heel curve 23 may be formed so that its outer shape at rear end is a concave cup shape when viewed from lateral side, or may slope upward and inward from the midsole 21 side in a substantially linear manner.

[0052]

In other words, the term "curve" here is not limited to a curve (arc) in a strict sense. Note that in either case, the vicinity of the upper edge forming the shoe opening 18 inclines inward, thereby holding (hooking) the heel to prevent the shoe from slipping off unexpectedly.

[0053]

On the other hand, as shown in FIG. 2, the upper surface of the midsole 21 is provided with an insole (inner sole) 24 with cushioning property and moisture-absorbing property (including antibacterial property). The insole 24 may be of uniform thickness, or may have a thickness that varies to come into contact with the arch of the foot.

[0054]

The inner surfaces of the sides 15, 16 and the heel portion 17 are provided with a lining (covering for inside surface) 25. The material and thickness of the lining 25 are set to have an appropriate cushioning property. In this embodiment, two or more layers of cloth (inner surface skin), cushion body (e.g., sponge) or the like are used, but a flexible material with good moisture-absorbing property, such as pigskin, may also be used.

[0055]

The decorative band 19 is a decorative outer surface skin joined to the upper edges of the sides 15, 16 and the heel portion 17, and the back surface (inner surface) side is provided with a lining 25. Therefore, the decorative band 19 essentially forms the shoe opening 18.

[0056]

The decorative band 19 includes a part continuing upward from a heel portion 17, i.e., at a heel portion 17 including a rear edge 18b of an opening edge 18a of a shoe opening 18, a guide portion 26 slopes upward as it goes away from the rear edge 18b.

[0057]

In this embodiment, the decorative band 19 is provided, and thereby the opening edge 18a of the shoe opening 18 is formed by the upper edge of the decorative band 19. Note that the rear edge 18b is numbered in FIG. 1 as a rear edge without the decorative band 19.

[0058]

In other words, the decorative band 19 also functions as the stitch of the perimeter, excluding the portion formed by the upper 12, of the shoe opening 18. Therefore, when the decorative function and the stitch function are not necessary, it is also possible to form the shoe opening 18 by the vicinity of the upper edges of the sides 15, 16 and the heel portion 17, and eliminate the decorative band 19.

[0059]

As shown by the dashed line in FIG. 1, a counter 27 is disposed between the heel portion 17 and the lining 25. The counter 27 is a double structure including a first counter 28 and a second counter 29 that at least partly overlap each other.

[0060]

The first counter 28 integrally has a concave curved surface portion 30 that is inwardly concave to support the heel of a person, and a lateral surface portion 31 that go around from the concave curved surface portion 30 to the left and the right, and is in the shape of a three-dimensional curved plate formed to follow the outer periphery of the heel of the foot.

[0061]

The first counter 28 is made of a relatively hard resin material or a material formed by using a (compressed) leather as a base material and spraying a resin powder material onto it.

[0062]

Note that for the resin material or the resin powder material, a thermoplastic resin such as a thermoplastic polyurethane (TPU), a polyamide elastomer (PAE) and an ABS resin can be used.

[0063]

The second counter 29 integrally has an overlapping concave curved surface portion 32 located inside the first counter 28 to follow the concave curved surface portion 30, and a guide core portion 33.

[0064]

The guide core portion 33 slopes in a direction opposite to the heel curve 23 sloping inward as it approaches the rear edge 18b. Thereby, the shape retention of the guide portion 26 sloping in a direction opposite to the heel curve 23 sloping inward as it approaches the rear edge 18b is maintained at a high level.

[0065]

The guide core portion 33 is in the shape of semicircle when viewed from the front, and a slit 34 that opens toward the upper edge is formed at the apex of the guide core portion.

[0066]

The guide portion 26 slopes in a direction opposite to the heel curve 23 sloping inward as it approaches the rear edge 18b.

[0067]

The second counter 29 is soft compared to the first counter 28. As for the term “soft” here, for example, it is possible to be softened by being made thinner than the first counter 28, or by using a different material.

[0068]

Note that the second counter 29 is formed by, for example, a shape-memory resin (shape-memory polymer). Thereby, even if the guide core portion 33 is deformed by a person’s foot, it can return to its original state (shape) by heating.

[0069]

As the material of the shape-memory resin, trans-isoprene, polynobornene, styrene-butadiene copolymer, polyurethane, etc. can be used.

[0070]

Note that the outer surface of the heel portion 17 may be provided with a hooking portion 35 projecting outward to go around to the left and the right of the heel portion 17.

[0071]

In such structure, as shown in FIG. 5(A), when the shoe 10 is put on and a foot is inserted from the shoe opening 18, the foot can be easily put in as shown in FIG. 5(B) by providing near the heel a guide portion 26 for guiding the foot in.

[0072]

Thus, the shoe 10 includes a shoe opening 18 that opens to make it possible to insert a person’s foot.

[0073]

Here, by providing the heel portion 17 that includes the rear edge 18b of the opening edge 18a of the shoe opening 18 with the guide portion 26 that slopes upward as it goes away from the rear edge 18b of the shoe opening 18, the ease of putting on the shoe can be improved without enlarging the opening area of the shoe opening 18.

[0074]

The guide portion 26 slopes in a direction opposite to the heel curve 23 sloping inward as it approaches the rear edge 18b.

[0075]

Thus, the heel portion 17 is provided with a heel curve 23 sloping inward as it approaches the rear edge 18b to hold a person's heel and make it difficult for the shoe to slip off, so by providing a guide portion 26 that slopes in a direction opposite to the heel curve 23, the heel guide angle of the guide portion 26 can be easily set.

[0076]

The heel portion 17 includes a counter 27 integrally having an inward-facing concave curved surface portion 30 to support a person's heel, and the counter 27 includes a guide core portion 33 for maintaining the shape of the guide portion 26.

[0077]

Thus, by providing the heel portion 17 with the counter 27 that integrally has an inward-facing concave curved surface portion 30 to support the person's heel, and providing the counter 27 with the guide core portion 33 that is used to maintain the shape of the guide portion 26, the ease of putting on a shoe can be further improved while maintaining the shape of the heel portion 17.

[0078]

The guide core portion 33 is in the shape of semicircle when viewed from the front, and a slit 34 that opens toward the upper edge is formed at the apex of the guide core portion.

[0079]

Thus, by forming the slit 34 that opens toward the upper edge at the apex of the guide core portion 33 that is in the shape of semicircle when viewed from the front, the guide core portion 33 can be easily deformed when the shoe is put on, and the ease of putting on the shoe can be improved.

[0080]

The counter 27 is a double structure including a first counter 28 having a lateral surface portion that goes around from the concave curved surface portion 30 to the left and the right, as well as a second counter 29 integrally having an overlapping concave curved surface portion 32 that is located inside the first counter 28 to follow the concave curved surface portion 30 and a guide core portion 33, and thereby the shape of the concave curved surface of the heel portion 17 can be easily ensured.

[0081]

Thus, by having the double-structured counter 27, providing the first counter 28 with the lateral surface portion 31 that wraps around from the concave curved surface portion 30 to the left and the right, and integrally providing the second counter 29 located inside the first counter 28 with an overlapping concave curved surface portion 32 following the concave curved surface portion 30 and a guide core portion 33, the shape of the curved surface of the heel portion 17 can be easily ensured.

[0082]

The second counter 29 is soft compared to the first counter 28.

[0083]

Thus, by having a second counter 29 that includes the guide core portion 33 and whose hardness is soft compared to that of the first counter 28, the shape of the curved surface of the heel portion 17 can be easily ensured, and the deformation of the guide core portion 33 can be allowed to improve the ease of putting on the shoe.

[0084]

The outer surface of the heel portion 17 is provided with a hooking portion 35 projecting outward to go around to the left and the right of the heel portion 17.

[0085]

Thus, by providing the hooking portion 35 in such a manner that it projects outward to wrap around to the left and the right of the heel portion 17 as the outer surface of the heel portion 17, and by having the other foot hooked on the hooking portion 35, the shoe can be easily taken off.

[Reference to the Numerals]

[0086]

10	shoe
11	sole

12 upper
13 stretchable portion
14 stretchable portion
15 side
16 side
17 heel portion
18 shoe opening
18a opening edge
18b rear edge
19 decorative band
20 outsole
21 midsole
22 cushion sole
23 heel curve
24 insole
25 lining
26 guide portion
27 counter
28 first counter
29 second counter
30 concave curved surface portion
31 side surface
32 overlapping concave curved surface portion
33 guide core portion
34 slit
35 hooking portion

[Procedure amendment 2]
[Name of document to be amended] Claims of Utility Model Registration
[Name of item to be amended] Full text
[Method for amendment] Modification
[Content of amendment]
[Claims of Utility Model Registration]
[Claim 1]
A shoe, comprising a heel guide portion spreading at the rear of a body, at an upper end of a heel curve portion that is a rear end of an opening for inserting a user's foot.
[Claim 2]
The shoe according to claim 1, wherein the heel guide portion is provided at the rear end of a top line forming the periphery of the opening and has an extending portion extending to the rear of the body, and the extending portion has an upper-surface inwardly-sloping portion for supporting a heel from a lower side and guiding the insertion of the foot into the inside of the body when a user inserts the foot into the body from the opening.
[Claim 3]
The shoe according to claim 1 or 2, wherein a counter comprising a guide core portion for maintaining the shape of the heel guide portion is mounted inside the heel curve portion.
[Claim 4]
The shoe according to claim 3, wherein the upper end of the guide core portion is provided with a slit opening upward.
[Claim 5]
The shoe according to claim 3 or 4, wherein the counter comprises a first counter having a lateral surface portion wrapping around from an inward-facing concave curved surface portion to the left and the right to support a user's heel, as well as a second counter disposed inside the first counter and having an overlapping concave curved surface portion following the concave curved surface portion, and the guide core portion.

[Claim 6]

The shoe according to claim 5, wherein the second counter is soft compared to the first counter.

[Claim 7]

The shoe according to any one of claims 1-6, wherein an outer surface of the heel curve portion is provided with a hooking portion projecting outward to wrap around in the width direction of the heel curve portion.