(12) INTERNATIONAL APPLICATION PUBLISHED UNDER THE PATENT COOPERATION TREATY (PCT)

(19) World Intellectual Property Organization International Bureau

(43) International Publication Date 29 October 2020 (29.10.2020)

(10) International Publication Number WO 2020/218828 Al

WIPO | PCT

(51) International Patent Classification:
A43B 23/08 (2006.01) ***A43B 3/00*** (2006.01)
A43B 17/16 (2006.01) ***A43B 1/10*** (2006.01)
A43B 19/00 (2006.01)

(21) International Application Number: PCT/KR2020/005326

(22) International Filing Date: 22 April 2020 (22.04.2020)

(25) Filing Language: Korean

(26) Publication Language: Korean

(30) Priority Data:
10-2019-0048102 24 April 2019 (24.04.2019) KR

(72) Inventor; and

(71) Applicant: SHIN, Sung Ne [KR/KR]; 27345 2F, 10, Jugong-gil, Chungju-si, Chungcheongbuk-do (KR).

(74) Agent: JIMYUNG PATENT FIRM; 06296 4F, 2706, Nambusunhwan-ro, Gangnam-gu, Seoul (KR).

(81) Designated States (unless otherwise indicated, for every kind of national protection): AE, AG, AL, AM, AO, AT, AU, AZ, BA, BB, BG, BH, BN, BR, BW, BY, BZ, CA, CH, CL, CN, CO, CR, CU, CZ, DE, DJ, DK, DM, DO, DZ, EC, EE, EG, ES, FI, GB, GD, GE, GH, GM, GT, HN, HR, HU, ID, IL, IN, IR, IS, JO, JP, KE, KG, KH, KN, KP, KW, KZ, LA, LC, LK, LR, LS, LU, LY, MA, MD, ME, MG, MK, MN, MW, MX, MY, MZ, NA, NG, NI, NO, NZ, OM, PA, PE, PG, PH, PL, PT, QA, RO, RS, RU, RW, SA, SC, SD, SE, SG, SK, SL, ST, SV, SY, TH, TJ, TM, TN, TR, TT, TZ, UA, UG, US, UZ, VC, VN, WS, ZA, ZM, ZW.

(84) Designated States (unless otherwise indicated, for every kind of regional protection): ARIPO (BW, GH, GM, KE, LR, LS, MW, MZ, NA, RW, SD, SL, ST, SZ, TZ, UG, ZM, ZW), EURASIA (AM, AZ, BY, KG, KZ, RU, TJ, TM), EUROPE (AL, AT, BE, BG, CH, CY, CZ, DE, DK, EE, ES, FI, FR, GB, GR, HR, HU, IE, IS, IT, LT, LU, LV, MC, MK, MT, NL, NO, PL, PT, RO, RS, SE, SI, SK, SM, TR), OAPI (BF, BJ, CF, CG, CI, CM, GA, GN, GQ, GW, KM, ML, MR, NE, SN, TD, TG).

Published:
— with international search report (Art. 21(3))
— before the expiration of the time limit for amending the claims and, should amendments be filed, published separately (Rule 48.2(h))

(54) Title: EASY-TO-WEAR FUNCTIONAL SHOE

(54) Title: EASY-TO-WEAR FUNCTIONAL SHOE

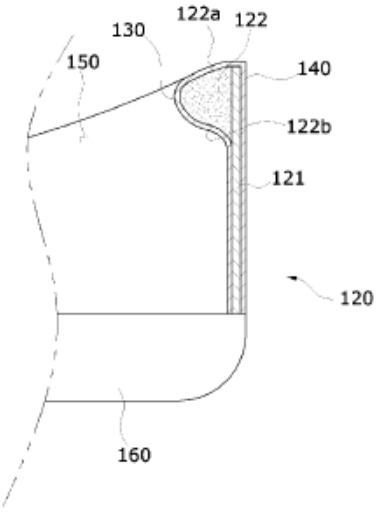

(57) Abstract: An easy-to-wear functional shoe according to an embodiment of the present invention comprises: a support member for supporting the heel of the functional shoe; and an elastic member coupled to the upper portion of the support member and formed to protrude from the support member toward the inside of the functional shoe.

(57) Abstract: An easy-to-wear functional shoe according to an embodiment of the present invention comprises: a support member for supporting the heel of the functional shoe; and an elastic member coupled to the upper portion of the support member and formed to protrude from the support member toward the inside of the functional shoe.

WO 2020/218828 A1

DESCRIPTION

TITLE OF THE INVENTION: EASY-TO-WEAR FUNCTIONAL SHOE

TECHNICAL FIELD

[1] The present invention relates to an easy-to-wear functional shoe.

BACKGROUND ART

[2] Generally, among the body parts of a human being, the foot plays an important role in contacting the ground during upright walking and supporting the body weight. In recent years, various functional shoes beneficial to health have been produced and sold for the purpose of protecting such feet.

[3] Shoes are typically manufactured from natural leather or synthetic resin materials, and since wearers prefer shoes that match their foot size, when putting on shoes, the heel of the foot catches on the heel portion of the shoe, making it difficult to wear the shoe.

[4] In particular, the upper end of the heel portion of a conventional shoe is formed to curve inwardly along the shape of the heel, so that when the wearer puts on and walks in the shoe, the heel can be securely seated. However, because of this, when the wearer puts on the shoe, the upper end of the heel portion folds inwardly into the shoe, or the foot catches on the upper end of the heel portion.

[5] Therefore, in order to easily put on shoes, shoelaces have been tightened and untied, or fingers or a shoehorn and the like have been used as auxiliary tools.

[6] However, all of these commonly require bending the waist or using the hands in a seated position, which has been inconvenient. In particular, for patients who have difficulty bending the waist or freely using their hands, putting on shoes itself has not been easy.

[7] As a prior art document related to the present invention, there is Korean Registered Patent Publication No. 10-0976255 (published on August 18, 2010), and the above prior art document discloses a technology relating to a shoe in which the rear portion of the shoe is automatically put on.

DETAILED DESCRIPTION OF THE INVENTION

TECHNICAL PROBLEM

[8] An object of the present invention is to provide an easy-to-wear functional shoe that can be conveniently put on without the wearer bending the waist or using fingers or an auxiliary tool such as a shoehorn.

SOLUTION TO PROBLEM

[9] An easy-to-wear functional shoe according to an embodiment of the present invention includes a support member supporting the heel portion, and an elastic member coupled to the upper side of the support member and formed to protrude in an inward direction of the functional shoe.

[10] It is preferable that the support member is coupled substantially perpendicularly to the outsole.

[11] The support member is formed in a semicircular arch shape that surrounds the heel portion.

[12] It is preferable that the support member is formed up to the upper end of the heel portion.

[13] It is preferable that the elastic member is elastically deformed in a rearward direction according to an external force applied by the wearer's heel when the wearer's heel contacts the elastic member.

[14] The elastic member may be made of any one material of rubber and urethane.

[15] It is preferable that the support member is of a material having a hardness such that the heel portion is not folded in an inward direction even by an external force applied by the wearer.

[16] It is preferable that the support member is of a reinforced plastic material.

[17] The support member may further include a bottom surface coupled to the outsole.

[18] The support member may be coupled to an elongated hole provided in the outsole.

[19] The elastic member includes a wearing surface that is an inclined section in an inward direction of inclination increasing downwardly, and a seating surface that is formed at the lower end of the wearing surface and extends in a direction of inclination outwardly and downwardly to surround the heel in an inclined manner.

[20] The elastic member may further include a protection surface formed to extend downwardly from the seating surface.

[21] An inclined section extending in an outward direction is formed at the upper end of the support member.

[22] The support member and the elastic member may be provided between the inner skin and the outer skin of the heel portion.

[23] Meanwhile, in a functional shoe having a heel portion, an outsole, and being wrapped by an inner skin and an outer skin, an easy-to-wear functional shoe according to another embodiment of the present invention includes a support member provided between the inner skin and the outer skin to support the heel portion, and an elastic member provided between the inner skin and the outer skin, coupled to the upper side of the support member, and formed to protrude in an inward direction of the functional shoe.

[24] Here, it is preferable that the support member is coupled substantially perpendicularly to the outsole.

ADVANTAGEOUS EFFECTS OF INVENTION

[25] The present invention can provide an easy-to-wear functional shoe by providing a support member and an elastic member at the heel portion so that the wearer can conveniently put on the shoe without bending the waist or using the hands when putting on the shoe.

[26] In particular, the support member is made of a rigid material so that the heel portion does not buckle inwardly by an external force applied by the wearer, and the elastic member is elastically deformed in a rearward direction according to an external force applied by the wearer, so that the wearer can easily put on the shoe without bending the waist or using an auxiliary tool.

[27] Furthermore, because the support member prevents the upper end of the heel portion from bending inwardly, it is possible to prevent the heel from being caught or the shoe from being folded inwardly when the wearer puts on the shoe.

[28] In addition, even in the case of a patient whose body is not in good condition, the patient can put on or take off the shoe by himself or herself without the help of others, thereby improving the quality of life.

BRIEF DESCRIPTION OF THE DRAWINGS

[29] FIG. 1 is a perspective view schematically illustrating an easy-to-wear functional shoe according to an embodiment of the present invention.

[30] FIG. 2 is a cross-sectional view taken along line A-A' shown in FIG. 1.

[31] FIG. 3 is a cross-sectional view taken along line B-B' shown in FIG. 1.

[32] FIG. 4 is a plan view schematically illustrating a modified example of the elastic member in the easy-to-wear functional shoe according to an embodiment of the present invention.

[33] FIGS. 5 to 7 are views schematically illustrating a state in which a wearer puts on the easy-to-wear functional shoe according to an embodiment of the present invention.

[34] FIG. 8 is a view schematically illustrating the easy-to-wear functional shoe according to an embodiment of the present invention for explaining the support member and the elastic member.

[35] FIG. 9 is a view schematically illustrating a modified example of the elastic member in the easy-to-wear functional shoe according to an embodiment of the present invention.

[36] FIG. 10 is a view schematically illustrating a modified example of the support member in the easy-to-wear functional shoe according to an embodiment of the present invention.

[37] FIG. 11 is a cross-sectional view of the easy-to-wear functional shoe according to another embodiment of the present invention.

[38] FIG. 12 is a view schematically illustrating the easy-to-wear functional shoe according to another embodiment of the present invention for explaining the support member and the elastic member.

[39] FIG. 13 is a view schematically illustrating a modified example of the elastic member in the easy-to-wear functional shoe according to another embodiment of the present invention.

[40] FIG. 14 is a view schematically illustrating a modified example of the support member in the easy-to-wear functional shoe according to another embodiment of the present invention.

[41] FIG. 15 is a cross-sectional view illustrating a modified example of the elastic member in the easy-to-wear functional shoe according to another embodiment of the present invention.

[42] FIG. 16 is a cross-sectional view of the easy-to-wear functional shoe according to yet another embodiment of the present invention.

[43] FIGS. 17 and 18 are views schematically illustrating a modified example of the support member in the easy-to-wear functional shoe according to yet another embodiment of the present invention.

MODE FOR CARRYING OUT THE INVENTION

[44] The advantages and features of the present invention, and the methods for achieving them, will become apparent with reference to the embodiments described in detail below together with the accompanying drawings. However, the present invention is not limited to the embodiments disclosed hereinafter, but may be embodied in various different forms, and the present embodiments are merely provided so that the disclosure of the present invention is complete, and to fully inform those of ordinary skill in the art to which the present invention pertains of the scope of the invention, and the present invention is defined by the recitations of the claims. Meanwhile, the terms used in the present specification are for describing the embodiments and are not intended to limit the present invention. In the present specification, a singular expression includes a plural expression unless specifically stated otherwise. As used in the specification, "comprises" or "comprising" does not exclude the presence or addition of one or more other components, steps, operations and/or elements other than the stated components, steps, operations and/or elements.

[45] Hereinafter, preferred embodiments of the present invention will be described in detail with reference to the accompanying drawings.

[46] FIG. 1 is a perspective view schematically illustrating an easy-to-wear functional shoe according to an embodiment of the present invention.

[47] Referring to FIG. 1, the easy-to-wear functional shoe 100 includes a forefoot portion 110 and a heel portion 120, and has a form wrapped by an inner skin 130 and an outer skin 140.

[48] In addition, the easy-to-wear functional shoe 100 includes a wearing recess 150 in which the wearer's foot is seated, and an outsole 160.

[49] FIG. 2 is a cross-sectional view taken along line A-A' shown in FIG. 1, and FIG. 3 is a cross-sectional view taken along line B-B' shown in FIG. 1.

[50] Referring to FIGS. 2 and 3 together, the easy-to-wear functional shoe (100 of FIG. 1) according to the present invention includes a support member 121 and an elastic member 122 at the heel portion 120.

[51] The support member 121 is provided between the inner skin 130 and the outer skin 140. The support member 121 has a function of supporting the heel portion 120. At this time, the support member 121 may be made of a material that prevents the heel portion 120 from breaking or collapsing in front (inward direction) when an external force is applied by the wearer, such as reinforced plastic.

[52] Here, the reinforced plastic refers to a plastic that compensates for the disadvantages of plastic, which is weak against heat and impact, and means a plastic that has been reinforced using a reinforcing material such as glass fiber, carbon fiber, or the like.

[53] The support member 121 is coupled substantially perpendicularly to the outsole 160 to form the heel portion 120. At this time, as shown in FIG. 3, the support member 121 is formed in a semicircular arch shape to surround and support the heel portion 120.

[54] Here, the semicircular arch shape is not necessarily limited to a semicircle, and includes various shapes depending on the extension length of the side surfaces of the support member 121. At this time, it is preferable that the support member 121 is formed up to the upper end of the heel portion.

[55] The elastic member 122 is provided between the inner skin 130 and the outer skin 140. The elastic member 122 is formed to protrude from the support member 121 in an inward direction. At this time, the inward direction means the inner side where the wearing recess 150 is located.

[56] The elastic member 122 is bonded to the inner side upper end of the support member 121. At this time, the elastic member 122 includes a wearing surface 122a and a seating surface 122b.

[57] The wearing surface 122a is formed to protrude at the upper end of the support member 121 and is an inclined section that inclines in an inward direction of inclination increasing downwardly. Such a wearing surface 122a guides the wearer's foot into the wearing recess 150 so that the wearer's heel can easily enter the wearing recess 150.

[58] The seating surface 122b is connected to the lower end of the wearing surface 122a. The seating surface 122b is an inclined section that inclines in an outward direction of inclination increasing downwardly. Here, the outward direction means the outer side with respect to the wearing recess 150.

[59] The seating surface 122b wraps the wearer's ankle so that the shoe is not easily slipped off when the wearer has fully inserted the foot into the wearing recess 150.

[60] FIG. 4 is a plan view schematically illustrating a modified example of the elastic member in the easy-to-wear functional shoe according to an embodiment of the present invention.

[61] Referring to FIG. 4, the elastic member 122 may be formed at the central upper end of the shoe heel portion 120. Here, the central portion of the heel portion 120 encompasses the portion formed based on the center of the shoe heel portion 120.

[62] At this time, the elastic member 122 may be formed only at the central upper end of the heel portion 120. Accordingly, in the embodiment of FIG. 4, based on the central portion of the heel portion 120, the left and right inner and outer skins 130, 140 do not have the elastic member 122 therein. In this structure, when the wearer inserts the foot into the wearing recess 150, the elastic member 122 can only protect or seat the heel.

[63] FIGS. 5 to 7 are views schematically illustrating a state in which a wearer puts on the easy-to-wear functional shoe according to an embodiment of the present invention.

[64] First, referring to FIG. 5, the easy-to-wear functional shoe according to the present invention has a support member 121 and an elastic member 122 provided at the heel portion 120, so that the wearer can conveniently put on the shoe without bending the waist or using the hands when putting on the shoe.

[65] When the wearer inserts the foot 10 into the wearing recess 150 to put on the shoe, the wearer's heel 11 comes into contact with and touches the elastic member 122 which has wrapped the inner skin 130.

[66] At this time, as shown in FIG. 6, when the wearer's heel 11 applies an external force (F) to the inner skin 130, the elastic member 122 provided inside the inner skin 130 is elastically deformed by a force exerted by the heel 11.

[67] That is, the elastic member 122 is elastically deformed by the external force (F) applied by the heel 11 and is concavely recessed in an outward direction. Here, the outward direction means the outer side with respect to the wearing recess 150.

[68] It is preferable that the elastic member 122 capable of such elastic deformation is made of a rubber material. In addition, the elastic member 122 may be made of a high-elasticity material such as urethane having elasticity.

[69] The shape of the support member 121 is not fundamentally deformed, but the support member 121 may be elastically deformed in an outward direction (outer side) so that the wearer can easily put on the shoe. However, the support member 121 is not deformed in an inward direction.

[70] It is preferable that the support member 121 is made of a reinforced plastic material. Here, it is preferable that the support member 121 does not easily break by an external force.

[71] Referring to FIG. 7, when the wearer puts on the shoe, the wearer's foot 10 is seated in the wearing recess (150 of FIG. 6). At this time, the elastic member 122 is restored to its original shape after the wearer's heel 11 has passed therethrough.

[72] The seating surface 122b of the elastic member 122 thus restored seats the wearer's heel 11 so that the wearer's foot 10 does not easily slip off in an outward direction. At this time, the seating surface 122b is formed in a shape that wraps the ankle of the wearer wearing the shoe.

[73] When the wearer takes off the shoe, the wearer fixes the heel portion 120 and lifts the heel 11, and then the elastic member 122 is compressed and the wearing recess 150 widens, so that the foot 10 can be easily separated from the shoe.

[74] FIG. 8 is a view schematically illustrating the easy-to-wear functional shoe according to an embodiment of the present invention for explaining the support member and the elastic member.

[75] Referring to FIG. 8, the support member 121 is fitting-engaged in a semicircular arch-shaped elongated hole 161 provided in the outsole 160 so that the heel portion of the shoe forms a vertical surface. At this time, the support member 121 is also formed in a semicircular arch shape corresponding to the elongated hole 161.

[76] The elastic member 122 is formed to protrude in an inward direction at the upper end of the support member 121. At this time, the elastic member 122 is coupled to the inner side upper end of the support member 121. Here, the elastic member 122 and the support member 121 may be coupled in any one form of adhesion, Velcro (hook-and-loop) detachable coupling, and concave-convex (凹凸) engagement.

[77] FIG. 9 is a view schematically illustrating a modified example of the elastic member in the easy-to-wear functional shoe according to an embodiment of the present invention.

[78] Referring to FIG. 9, the elastic member 122 is formed to protrude in an inward direction of the support member 121. At this time, the elastic member 122 includes a wearing surface 122a, a seating surface 122b, and a protection surface 122c.

[79] The wearing surface 122a is an inclined section that inclines toward the inner side with inclination increasing downwardly.

[80] The seating surface 122b is connected to the lower end of the wearing surface 122a and is an inclined section that inclines toward the outer side with inclination increasing downwardly.

[81] The protection surface 122c means a section formed to extend downwardly from the seating surface 122b. The protection surface 122c enhances the wearing sensation of the heel. At this time, the protection surface 122c may extend to the semicircular arch-shaped elongated hole 161 provided in the outsole 160 and be coupled to the elongated hole 161.

[82] Here, the protection surface 122c may also be coupled together to the elongated hole 161 in a state of being bonded to the support member 121.

[83] FIG. 10 is a view schematically illustrating a modified example of the support member in the easy-to-wear functional shoe according to an embodiment of the present invention.

[84] Referring to FIG. 10, the support member 121 is formed in a semicircular arch shape that surrounds the heel portion. A bottom surface 121a that is integrally formed by being bonded to the outsole is formed at the lower end of such a support member 121.

[85] The bottom surface 121a forms the bottom plate of the support member 121 and also has a function of supplementing the rigidity so that the support member 121 can maintain its shape.

[86] Furthermore, the bottom surface 121a may be formed in a manner of being fitting-engaged in the outsole or being coupled in a concave-convex (凹凸) manner.

[87] FIG. 11 is a cross-sectional view of the easy-to-wear functional shoe according to another embodiment of the present invention, and FIG. 12 is a view schematically illustrating the support member and the elastic member for explanation purposes.

[88] Referring to FIGS. 11 and 12 together, in the easy-to-wear functional shoe according to another embodiment of the present invention, the upper end of the support member 121 is curved outwardly at the heel portion 120 of the functional shoe.

[89] That is, an inclined section 121b extending outwardly is provided at the upper end of the support member 121. The inclined section 121b can increase the adhesion to more effectively couple the elastic member 122.

[90] In other words, when the wearer's heel presses the wearing surface 122a of the elastic member 122 against the inner skin 130 wrapping it, a load is applied to the elastic member 122 in rearward and downward directions.

[91] At this time, the inclined section 121b supports the elastic member 122. Simultaneously, the inclined section 121b is formed in an inclined shape such that, based on the upper end of the support member 121, it slopes upwardly toward the outer side.

[92] Accordingly, the inclined section 121b can guide a wearing path so that the wearer's foot easily slides into the wearing recess 150.

[93] In addition, it is preferable that the inclined section 121b is formed so as not to buckle the heel portion, extending up to the upper end of the heel portion. Accordingly, the upper end of the heel portion, that is, the portion where the wearer's heel contacts, is prevented from buckling by the inclined section 121b, so that the wearer can easily put on the shoe.

[94] FIG. 13 is a view schematically illustrating a modified example of the elastic member in the easy-to-wear functional shoe according to another embodiment of the present invention.

[95] Referring to FIG. 13, the elastic member 122 is formed to protrude in an inward direction of the support member 121. At this time, the elastic member 122 includes a wearing surface 122a, a seating surface 122b, and a protection surface 122c.

[96] Since the description of configurations already described among the listed configurations would be redundant, it will be omitted. Therefore, only the modified portions will be examined.

[97] The wearing surface 122a of the elastic member 122 has a shape that is convex on the inner side and concave on the outer side. At this time, the outer surface of the wearing surface 122a has a shape corresponding to the inner surface of the inclined section 121b of the support member 121.

[98] Accordingly, the elastic member 122 can be more firmly coupled to the support member 121.

[99] Meanwhile, the protection surface 122c is coupled to the entirety of the support member 121 formed in a semicircular arch shape, thereby reducing the impact transmitted to the wearer's heel.

[100] FIG. 14 is a view schematically illustrating a modified example of the support member in the easy-to-wear functional shoe according to another embodiment of the present invention.

[101] Referring to FIG. 14, the support member 121 formed in a semicircular arch shape that surrounds the heel portion may include a bottom surface 121a.

[102] The bottom surface 121a forms the bottom plate of the support member 121 and has a function of supplementing the rigidity so that the support member 121 can maintain its shape.

[103] Furthermore, the bottom surface 121a may be formed in a manner of being fitting-engaged in the outsole or being coupled in a concave-convex (凹凸) manner.

[104] FIG. 15 is a cross-sectional view illustrating a modified example of the elastic member in the easy-to-wear functional shoe according to another embodiment of the present invention.

[105] Referring to FIG. 15, the elastic member 122 is adhesively coupled to the upper end of the inclined section 121b. At this time, the elastic member 122 may be provided in a form protruding from the upper end of the shoe heel portion 120.

[106] Since the elastic member 122 has a structure protruding from the upper end and the front based on the heel portion 120, the present invention provides an effect of preventing heel injury that may occur when the wearer puts on or takes off the shoe.

[107] Here, in order for the wearer to easily put on or take off the shoe, the heel portion 120 needs to maintain its shape while the elastic member 122 is elastically deformed, and therefore it is preferable that the angle (a) of the inclined section 121b formed at the upper end of the support member 121 is an obtuse angle.

[108] Generally, when the wearing recess 150 is wide or the heel portion 120 is low, the wearer can easily put on or take off the shoe. To this end, the present invention may be formed such that the length (d1, d2) of the heel portion 120 is lowered by 5 to 10 mm compared to other embodiments, and the elastic member 122 protrudes from the upper end of the support member 121 by the lowered length.

[109] At this time, it is preferable that the length (d1, d2) of the heel portion 120 and the length of the support member 121 are the same. This is because the length (d1, d2) of the heel portion 120 and the length of the support member 121 need to be the same so that the heel portion 120 can effectively maintain its shape.

[110] FIG. 16 is a cross-sectional view of the easy-to-wear functional shoe according to yet another embodiment of the present invention.

[111] Referring to FIG. 16, the support member 121 may be formed not between the inner skin 130 and the outer skin 140 of the heel portion 120, but on the outside of the outer skin 140.

[112] The support member 121 may also be integrally formed with the inner skin 130 and the outer skin 140 of the heel portion 120.

[113] The elastic member 122 may be formed not between the inner skin 130 and the outer skin 140 of the heel portion 120, but on the inner side of the inner skin 130 to directly contact the heel.

[114] Here, the elastic member 122 may be formed in a manner that enables detachment from the inner skin 130.

[115] That is, since the elastic member 122 itself may come into contact with the wearer's heel, it is preferable that the elastic member 122 is detachable from the inner skin 130 to enable laundering. At this time, the elastic member 122 and the inner skin 130 may be detachably attached in the form of Velcro (hook-and-loop), or detachably attached in a form enabling concave-convex (凹凸) engagement.

[116] FIGS. 17 and 18 are views schematically illustrating a modified example of the support member in the easy-to-wear functional shoe according to yet another embodiment of the present invention.

[117] First, referring to FIG. 17, the support member 121 is formed in a semicircular arch shape. Such a support member 121 has an inclined shape in which both ends slope downwardly in an inward direction with the heel portion as the center.

[118] Accordingly, the heel portion of the support member 121 is formed in a length corresponding to the heel portion of the shoe, but the both ends of the support member 121 are formed in a shape that wraps only a part of the side section of the shoe heel portion.

[119] Next, referring to FIG. 18, the support member 121 may include a bottom surface 121a.

[120] The bottom surface 121a forms the bottom plate of the support member 121 and has a function of supplementing the rigidity so that the support member 121 can maintain its shape.

[121] Furthermore, the bottom surface 121a may be formed in a manner of being fitting-engaged in the outsole or being coupled in a concave-convex (凹凸) manner.

[122] Meanwhile, although not shown, the support member 121 may be provided between the inner and outer skins, and the elastic member 122 may be detachable from the support member 121 inside the inner skin and outside the outer skin. That is, the elastic member 122 may be formed in a shape that covers the upper end of the support member 121 formed in the semicircular arch shape.

[123] In other words, the elastic member 122 may include a jig (not shown) at the connection portion with the support member 121, so as to be connected to the support member 121. The jig is provided on one side of the elastic member 122 and can fitting-engage the elastic member 122 to the support member 121.

[124] Here, the support member 121 is formed in a size corresponding to the portion where the jig is coupled. Therefore, the support member 121 may be provided with a separate fitting groove (not shown) to which the jig is connected.

[125] The fitting groove is provided at a part of the upper end of the rear side of the support member 121, and may have a structure in which the jig of the elastic member 122 is fitting-inserted.

[126] The present invention is not limited to the above-described embodiments, and various modifications may be made within the scope of the technical idea permitted by the present invention.

INDUSTRIAL APPLICABILITY

[127] As described above, the embodiments of the present invention can be applied to a functional shoe that can be conveniently put on without the wearer bending the waist or using the hands when putting on the shoe.

CLAIMS

[Claim 1] An easy-to-wear functional shoe having a heel portion and an outsole, comprising:
a support member supporting the heel portion; and
an elastic member coupled to the upper side of the support member and formed to protrude in an inward direction of the functional shoe,
wherein the support member is coupled substantially perpendicularly to the outsole.

[Claim 2] The easy-to-wear functional shoe of claim 1, wherein
the support member
is a semicircular arch shape that surrounds the heel portion.

[Claim 3] The easy-to-wear functional shoe of claim 1, wherein
the support member
is formed up to the upper end of the heel portion.

[Claim 4] The easy-to-wear functional shoe of claim 1, wherein
the elastic member
is elastically deformed in a rearward direction according to an external force applied by the wearer's heel when the wearer's heel contacts the elastic member.

[Claim 5] The easy-to-wear functional shoe of claim 1, wherein
the elastic member
is made of any one material of rubber and urethane.

[Claim 6] The easy-to-wear functional shoe of claim 1, wherein
the support member
is of a material having a hardness such that the heel portion is not folded in an inward direction even by an external force applied by the wearer.

[Claim 7] The easy-to-wear functional shoe of claim 1, wherein
the support member
is of a reinforced plastic material.

[Claim 8] The easy-to-wear functional shoe of claim 2, wherein
the support member
further includes a bottom surface coupled to the outsole.

[Claim 9] The easy-to-wear functional shoe of claim 2, wherein
the support member
is coupled to an elongated hole provided in the outsole.

[Claim 10] The easy-to-wear functional shoe of claim 1, wherein
the elastic member comprises:
a wearing surface inclined in an inward direction with inclination increasing downwardly; and

a seating surface formed at the lower end of the wearing surface and extending in an outward direction with inclination increasing downwardly to surround the heel in an inclined manner.

[Claim 11] The easy-to-wear functional shoe of claim 10, wherein
the elastic member
further includes a protection surface formed to extend downwardly from the seating surface.

[Claim 12] The easy-to-wear functional shoe of claim 1, wherein
at the upper end of the support member,
an inclined section extending in an outward direction is formed.

[Claim 13] The easy-to-wear functional shoe of claim 1, wherein
the support member and the elastic member
are provided between the inner skin and the outer skin of the heel portion.

[Claim 14] An easy-to-wear functional shoe having a heel portion and an outsole and being wrapped by an inner skin and an outer skin, comprising:
a support member provided between the inner skin and the outer skin to support the heel portion; and
an elastic member provided between the inner skin and the outer skin, coupled to the upper side of the support member, and formed to protrude in an inward direction of the functional shoe,
wherein the support member is coupled substantially perpendicularly to the outsole.

[FIG. 1]

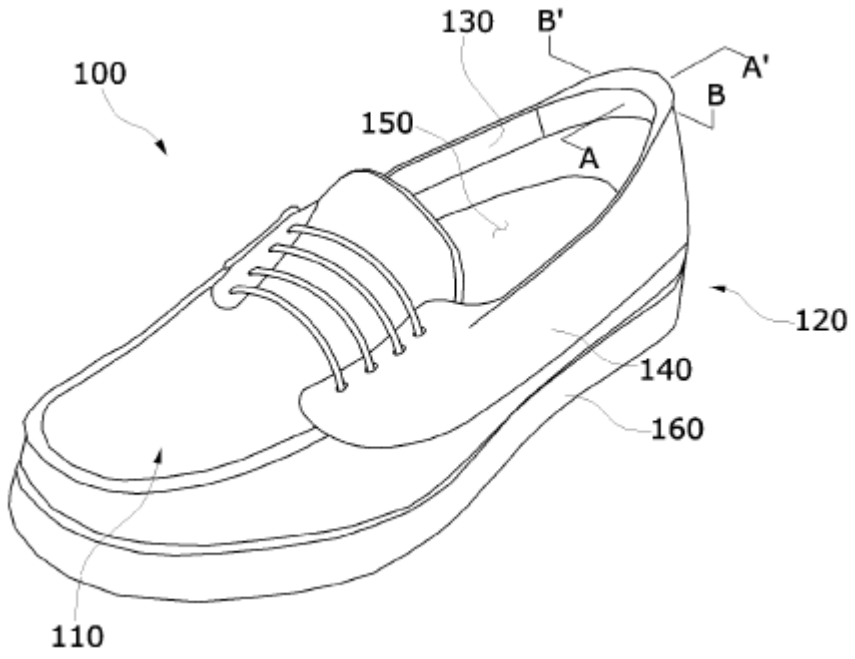
100
130
B'
A'
B
150
A
120
140
160
110

[FIG. 2]

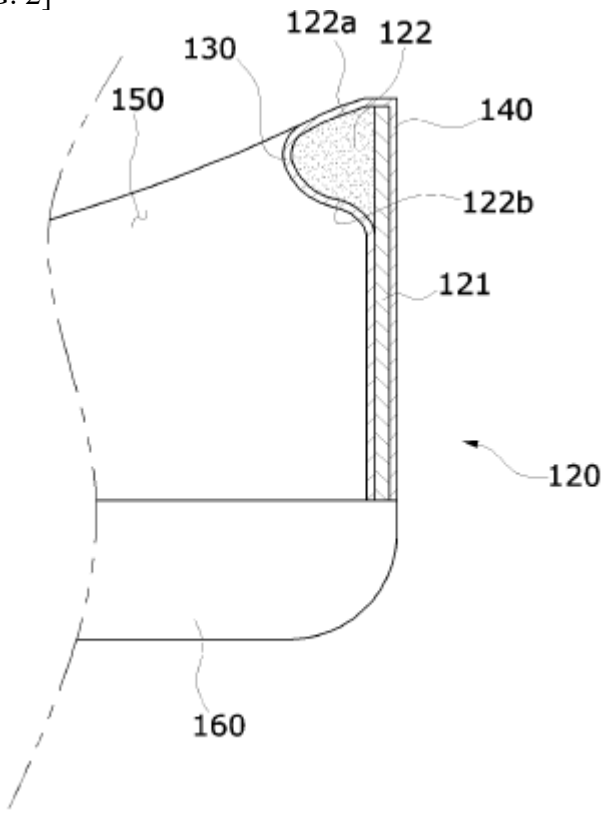
122a
122
130
150
140
122b
121
120
160

[FIG. 3]

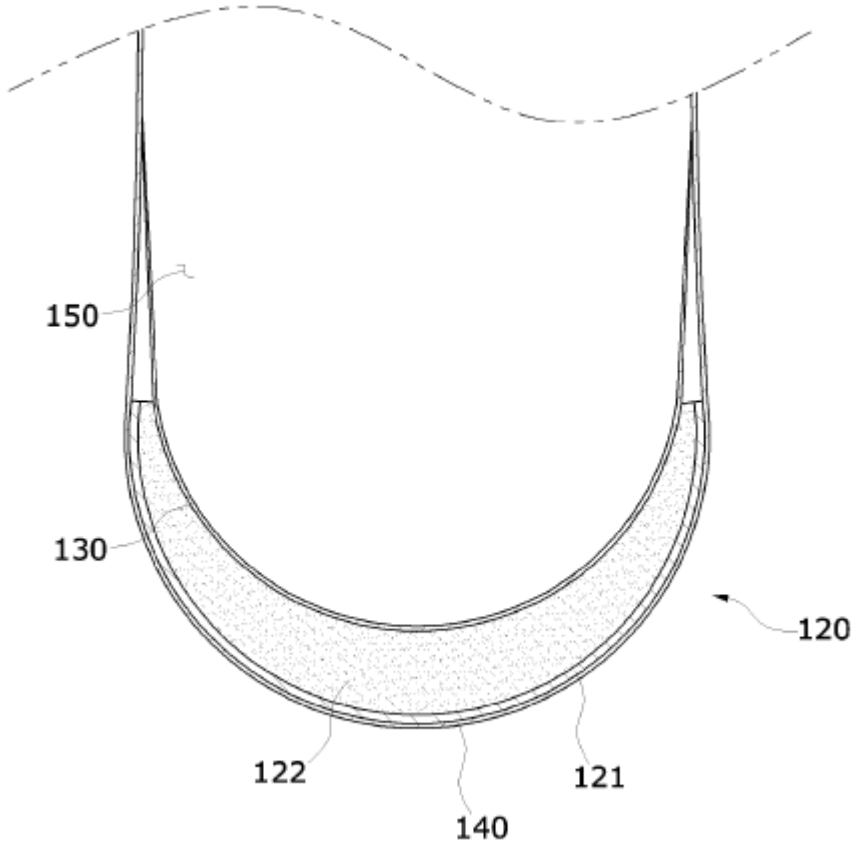

[FIG. 4]

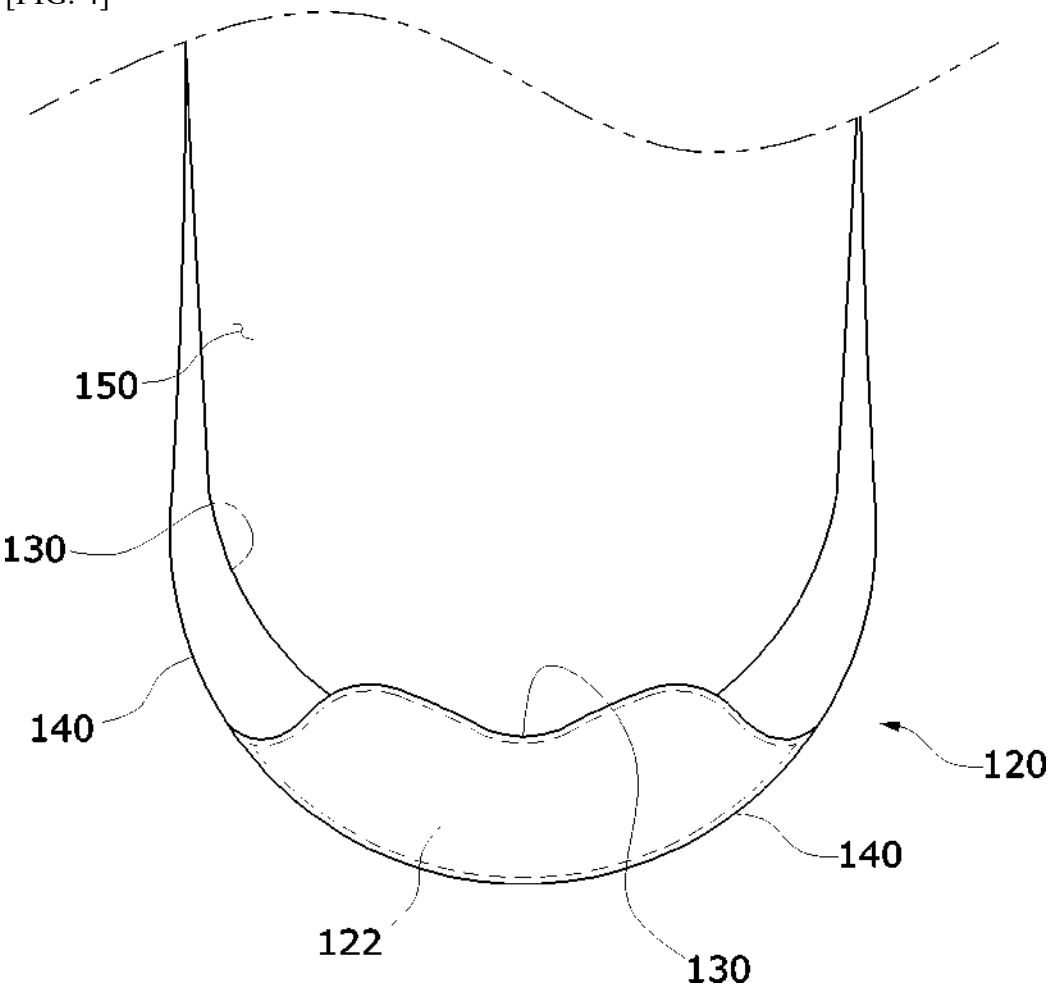

[FIG. 5]

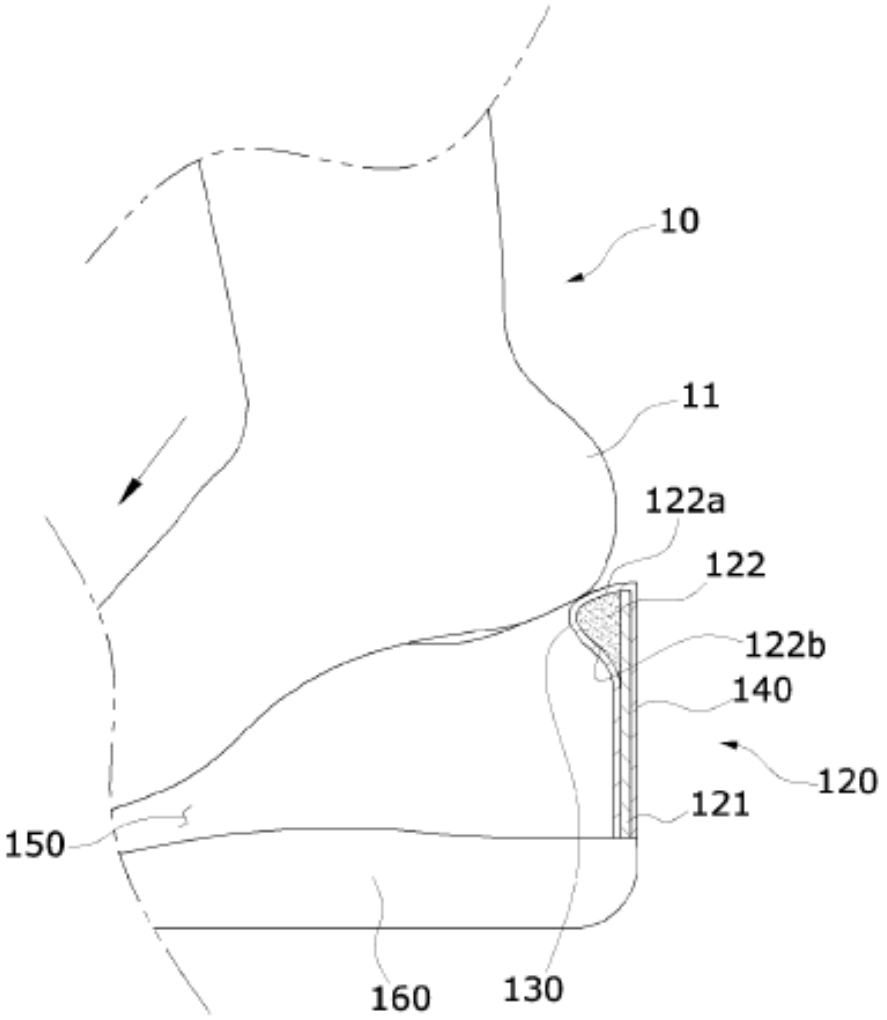

[FIG. 6]

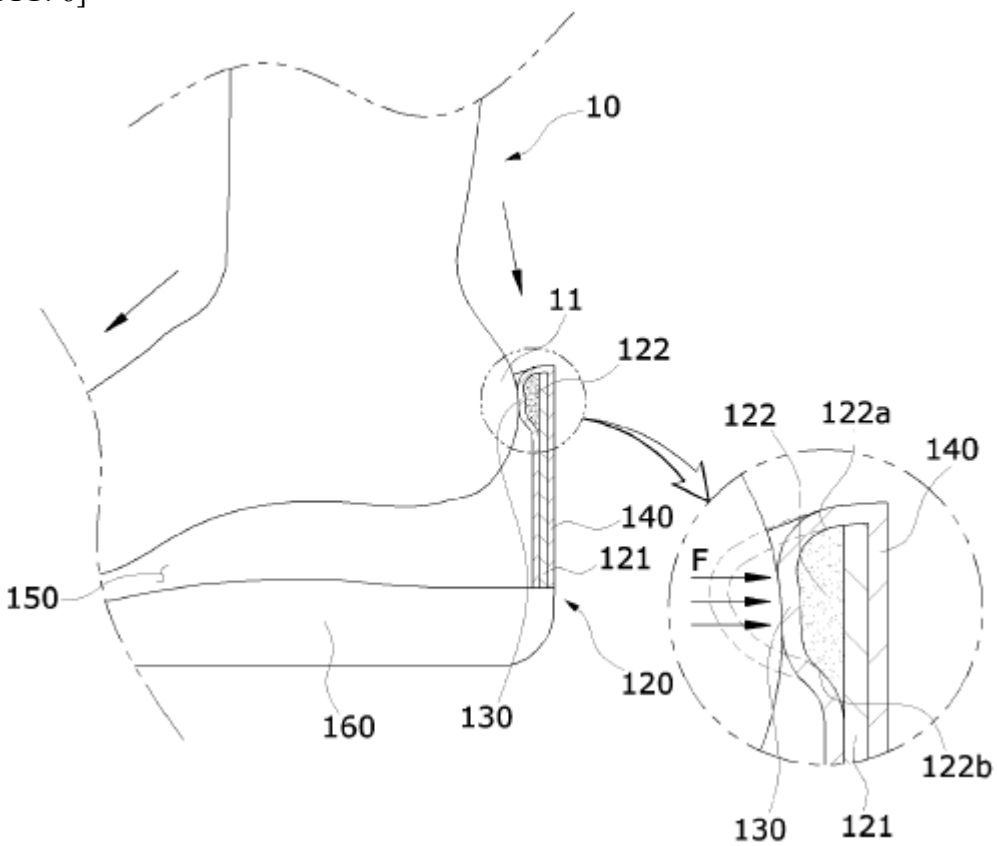
10
11
122
122
122a
140
140
121
F
150
120
160
130
122b
130
121

[FIG. 7]

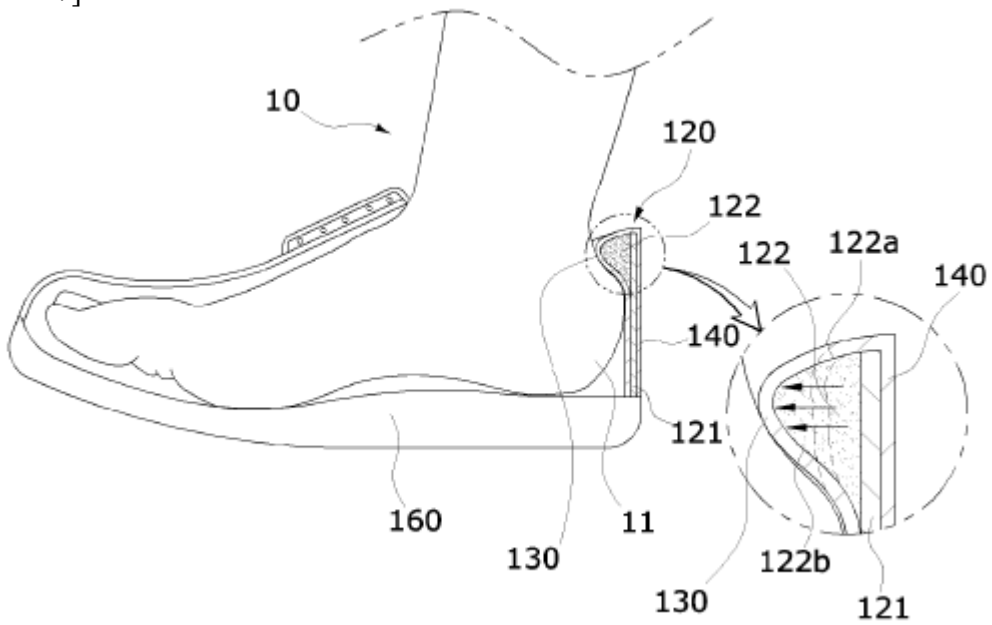
10
120
122
122
122a
140
140
121
160
11
130
122b
130
121

[FIG. 8]

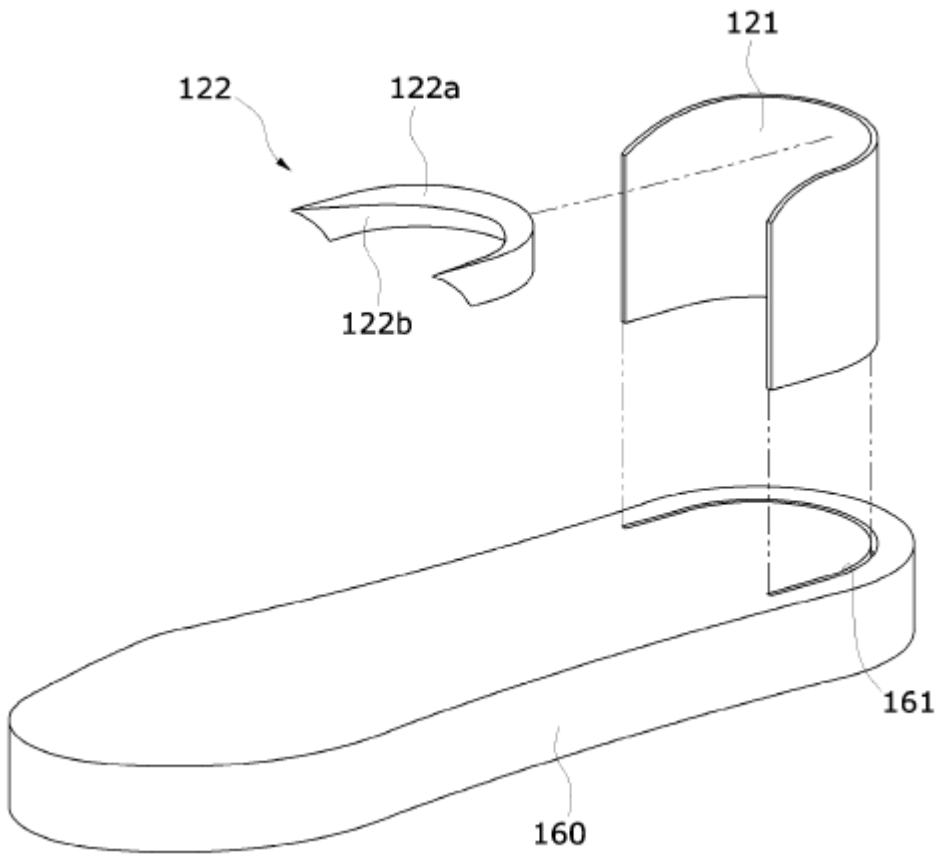

[FIG. 9]

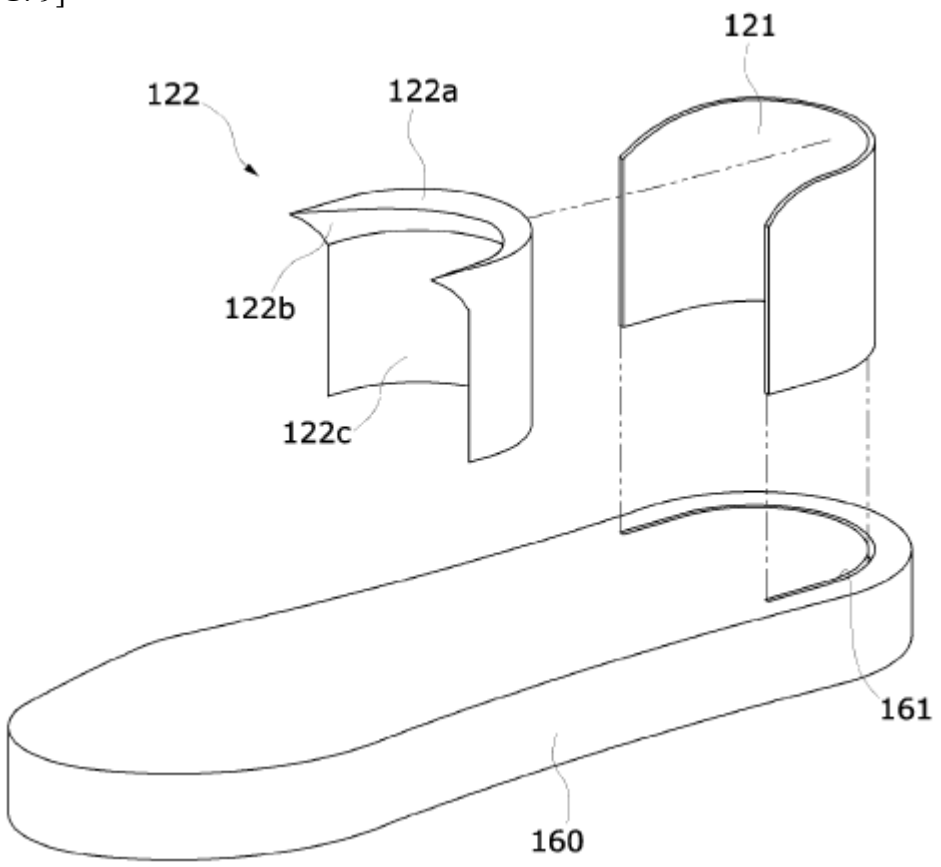

[FIG. 10]

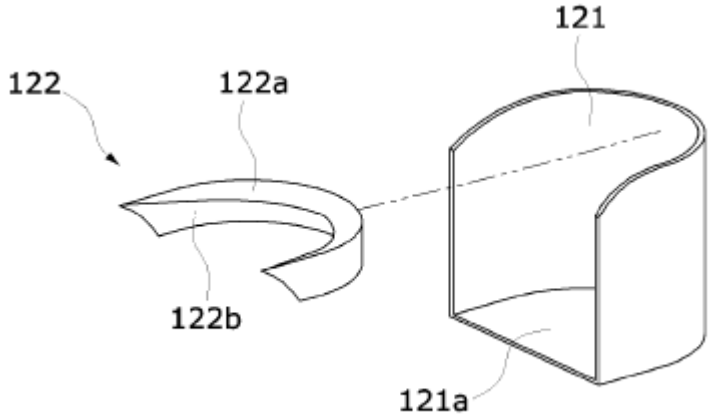

[FIG. 11]

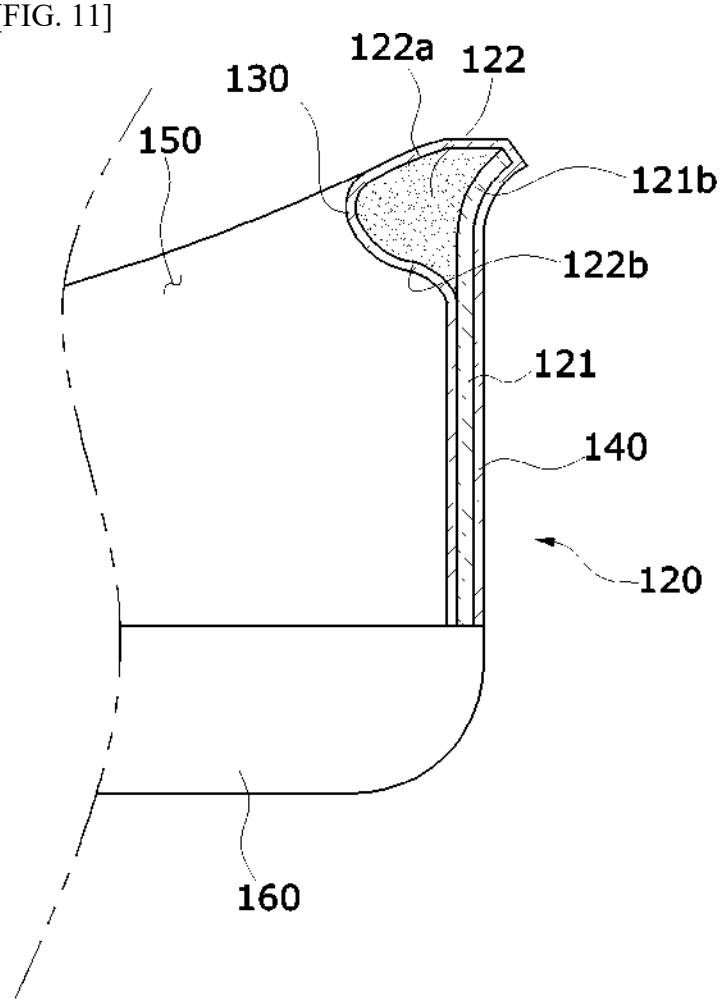
122a
122
130
150
121b
122b
121
140
120
160

[FIG. 12]

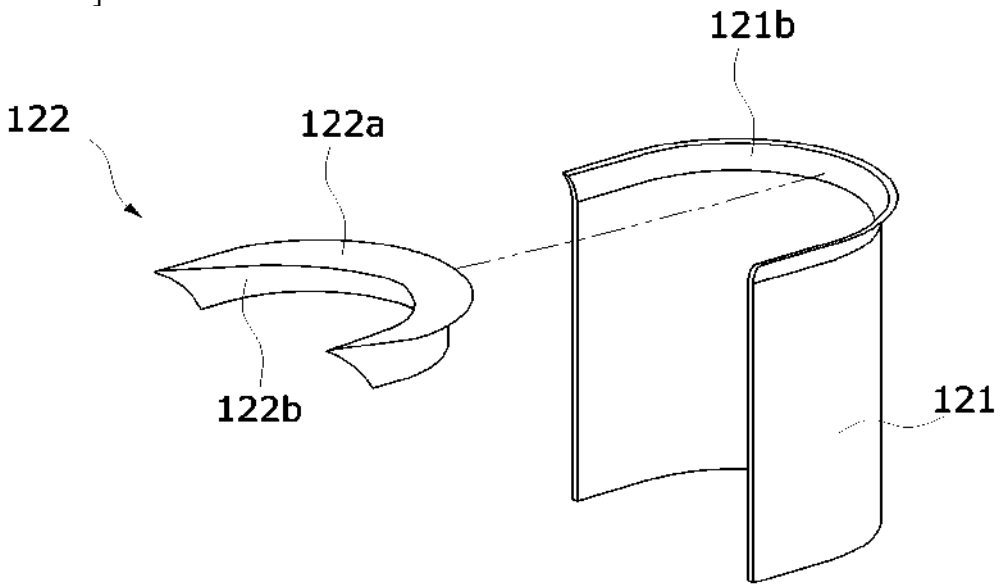
121b
122
122a
122b
121

[FIG. 13]

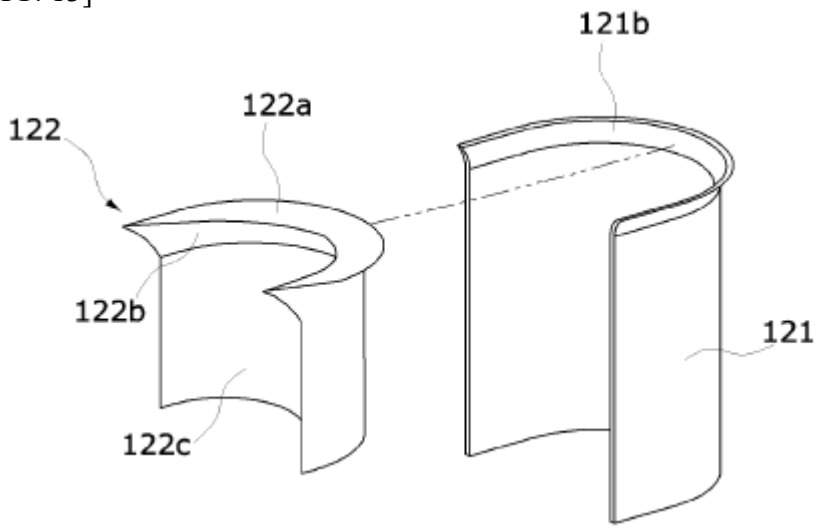

[FIG. 14]

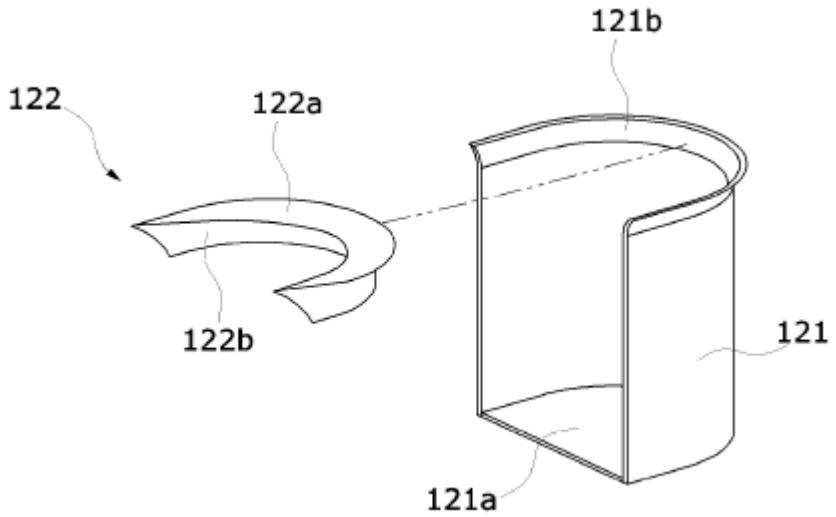

[FIG. 15]

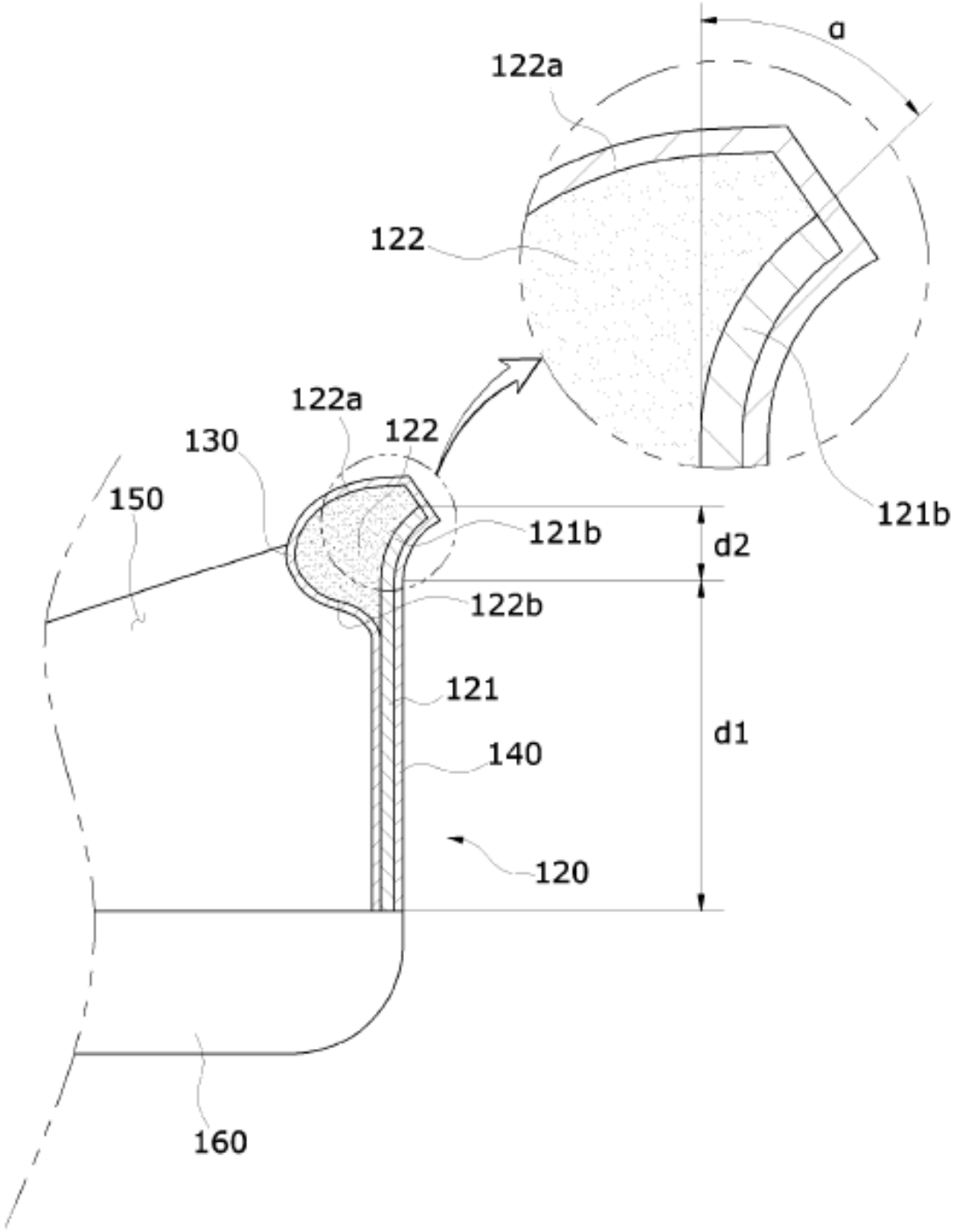

[FIG. 16]

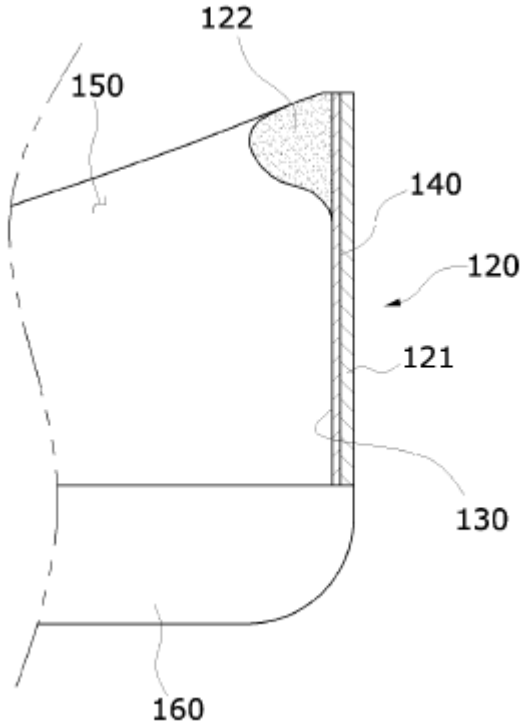

[FIG. 17]

[FIG. 18]

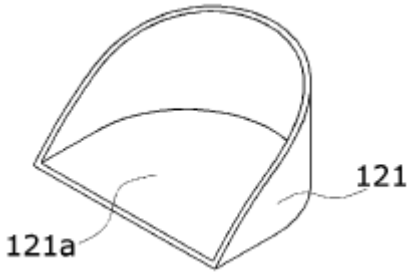

INTERNATIONAL SEARCH REPORT

International application No.
PCT/KR2020/005326

A. CLASSIFICATION OF SUBJECT MATTER

A43B 23/08(2006.01)i, A43B 17/16(2006.01)i, A43B 19/00(2006.01)i, A43B 3/00(2006.01)i, A43B 1/10(2006.01)i

According to International Patent Classification (IPC) or to both national classification and IPC

B. FIELDS SEARCHED

Minimum documentation searched (classification system followed by classification symbols)

A43B 23/08; A43B 1/10; A43B 11/00; A43B 11/02; A43B 21/20; A43B 23/02; A43B 7/32

Documentation searched other than minimum documentation to the extent that such documents are included in the fields searched
Korean utility models and applications for utility models: IPC as above
Japanese utility models and applications for utility models: IPC as above

Electronic data base consulted during the international search (name of data base and, where practicable, search terms used)

eKOMPASS (KIPO internal) & Keywords: shoes, heel, support member, resilient member, protrusion

C. DOCUMENTS CONSIDERED TO BE RELEVANT

Category*	Citation of document, with indication, where appropriate, of the relevant passages	Relevant to claim No.
X	KR 20-2016-0002454 U (SHIN, Sun Pil) 13 July 2016 See paragraphs [0004]-[0007], [0010], [0026]-[0033]; claims 1-5; figures 1-4.	1-8,10,11,13,14
Y		12
A		9
Y	JP 3212460 U9 (TAKAHASHI, Naomichi) 14 September 2017 See paragraphs [0076]-[0078]; figures 1, 4.	12
A	KR 10-0713700 B1 (KWUN, Yong Kok) 04 May 2007 See paragraphs [0039], [0040], [0042]; figures 1, 5.	1-14
A	KR 10-2009-0130804 A (SHIM, Sang Ok) 24 December 2009 See paragraph [0035]; figure 1.	1-14
A	KR 10-2011-0104130 A (JO, Ik-hyun) 22 September 2011 See paragraph [0025]; figure 3.	1-14
A	KR 10-1844276 B1 (GYEONGBUK COLLEGE OF HEALTH INDUSTRY-ACADEMY COOPERATION GROUP) 02 April 2018 See the entire document.	1-14

☒ Further documents are listed in the continuation of Box C. ☒ See patent family annex.

* Special categories of cited documents:

"A" document defining the general state of the art which is not considered to be of particular relevance

"E" earlier application or patent but published on or after the international filing date

"L" document which may throw doubts on priority claim(s) or which is cited to establish the publication date of another citation or other special reason (as specified)

"O" document referring to an oral disclosure, use, exhibition or other means

"P" document published prior to the international filing date but later than the priority date claimed

"T" later document published after the international filing date or priority date and not in conflict with the application but cited to understand the principle or theory underlying the invention

"X" document of particular relevance; the claimed invention cannot be considered novel or cannot be considered to involve an inventive step when the document is taken alone

"Y" document of particular relevance; the claimed invention cannot be considered to involve an inventive step when the document is combined with one or more other such documents, such combination being obvious to a person skilled in the art

"&" document member of the same patent family

Date of the actual completion of the international search	Date of mailing of the international search report
14 AUGUST 2020 (14.08.2020)	**18 AUGUST 2020 (18.08.2020)**
Name and mailing address of the ISA/KR Korean Intellectual Property Office Government Complex Daejeon Building 4, 189, Cheongsa-ro, Seo-gu, Daejeon, 35208, Republic of Korea Facsimile No. +82-42-481-8578	Authorized officer Telephone No.

Form PCT/ISA/210 (second sheet) (January 2015)

INTERNATIONAL SEARCH REPORT

International application No.
PCT/KR2020/005326

C (Continuation). DOCUMENTS CONSIDERED TO BE RELEVANT

Category*	Citation of document, with indication, where appropriate, of the relevant passages	Relevant to claim No.
PX	KR 10-2016091 B1 (SHIN, Sung Ne) 29 August 2019 See paragraphs [0042]-[0120]; claims 1, 3-8, 10-14; figures 1-17. *The above document is the registered document for the priority of the present PCT application.	1-14

Form PCT/ISA/210 (continuation of second sheet) (January 2015)

INTERNATIONAL SEARCH REPORT
Information on patent family members

International application No.
PCT/KR2020/005326

Patent document cited in search report	Publication date	Patent family member	Publication date
KR 20-2016-0002454 U	13/07/2016	KR 20-0481311 Y1	09/09/2016
JP 3212460 U9	14/09/2017	None	
KR 10-0713700 B1	04/05/2007	None	
KR 10-2009-0130804 A	24/12/2009	WO 2009-154350 A1	23/12/2009
KR 10-2011-0104130 A	22/09/2011	KR 10-1092246 B1 WO 2011-115357 A2 WO 2011-115357 A3	15/12/2011 22/09/2011 10/11/2011
KR 10-1844276 B1	02/04/2018	None	
KR 10-2016091 B1	29/08/2019	None	

Form PCT/ISA/210 (patent family annex) (January 2015)

INTERNATIONAL SEARCH REPORT

International Application No
PCT/KR2020/005326

A. CLASSIFICATION OF SUBJECT MATTER (INTERNATIONAL PATENT CLASSIFICATION (IPC))
A43B 23/08(2006.01)i, A43B 17/16(2006.01)i, A43B 19/00(2006.01)i, A43B 3/00(2006.01)i, A43B l/10(2006.01)i

B. FIELDS SEARCHED

Minimum documentation searched (indicated by International Patent Classification)
A43B 23/08; A43B 1/10; A43B 11/00; A43B 11/02; A43B 21/20; A43B 23/02; A43B 7/32

Documentation searched other than minimum documentation belonging to the searched technical field
Korean registered utility model publications and Korean published utility model applications: IPC as indicated in minimum documentation Japanese registered utility model publications and Japanese published utility model applications: IPC as indicated in minimum documentation

Name and search terms of electronic data base consulted during the international search (where applicable)
eKOMPASS (KIPO internal search system) & Keywords: shoes, heel, support member, resilient member, protrusion

C. RELEVANT DOCUMENTS

Category*	Citation of document and indication of relevant passages (where applicable)	Relevant claims
X	KR 20-2016-0002454 U (Shin, Sun Pil) 2016.07.13 Paragraphs [0004]-[0007], [0010], [0026]-[0033]; Claims 1-5; Figures 1-4	1-8,10,11,13,14
Y		12
A		9
Y	JP 3212460 U9 (TAKAHASHI NAOMICHI) 2017.09.14 Paragraphs [0076]-[0078]; Figures 1, 4	12
A	KR 10-0713700 B1 (Kwun, Yong Kok) 2007.05.04 Paragraphs [0039], [0040], [0042]; Figures 1, 5	1-14
A	KR 10-2009-0130804 A (Shim, Sang Ok) 2009.12.24 Paragraphs [0035]; Figures 1	1-14
A	KR 10-2011-0104130 A (Jo, Ik-hyun) 2011.09.22 Paragraphs [0025]; Figures 3	1-14
A	KR 10-1844276 B1 (Gyeongbuk College of Health Industry-Academy Cooperation Group) 2018.04.02 Entire document	1-14

☒ Additional documents are listed in the continuation of Box C ☒ See the patent family annex.

* Special categories of cited documents:

"A" document defining the general state of the art which does not appear to be of particular relevance
"D" document cited from the applicant in the present international application
"E" earlier application or patent but published on or after the international filing date
"L" document which may throw doubts on priority claim(s) or which is cited to establish the publication date of another citation or other special reason
"O" document referring to an oral disclosure, use, exhibition or other means
"P" document published after the priority date but before the international filing date
"T" later document published after the priority date and not in conflict with the application but cited to understand the principle or theory underlying the invention
"X" document of particular relevance; the claimed invention cannot be considered novel or cannot be considered to involve an inventive step when the document is taken alone
"Y" document of particular relevance; the claimed invention cannot be considered to involve an inventive step when the document is combined with one or more other such documents, such combination being obvious to a person skilled in the art
"&" document member of the same patent family

Date of the actual completion of the international search	Date of mailing of the international search report
August 14, 2020 (14.08.2020)	August 18, 2020 (18.08.2020)
Name and mailing address of the ISA/KR Korean Intellectual Property Office (35208) Government Complex Daejeon, Seo-gu, Cheongsa-ro 189, Building 4 (Dunsan-dong, Government Complex Daejeon) Fax No.: +82-42-481-8578	Authorized officer Jeong, Da Won Telephone No.: +82-42-481-5373

Form PCT/ISA/210 (second sheet) (July 2019)

INTERNATIONAL SEARCH REPORT

International Application No.
PCT/KR2020/005326

C (Continuation). RELEVANT DOCUMENTS

Category*	Citation of document and indication of relevant passages (where applicable)	Relevant claims
PX	KR 10-2016091 B1 （Shin, Sung Ne） 2019.08.29 Paragraph [0042]-[0120]； Claims 1, 3-8, 10-14； Figures 1-17 *The above document is the registered document for the priority of the present PCT application.	1-14

Form PCT/ISA/210 (continuation of second sheet) (July 2019)

INTERNATIONAL SEARCH REPORT
Information on patent family members

International Application No.
PCT/KR2020/005326

Patent document cited in search report	Publication date	Patent family member	Publication date
KR 20-2016-0002454 U	2016/07/13	KR 20-0481311 Y1	2016/09/09
JP 3212460 U9	2017/09/14	None	
KR 10-0713700 B1	2007/05/04	None	
KR 10-2009-0130804 A	2009/12/24	WO 2009-154350 Al	2009/12/23
KR 10-2011-0104130 A	2011/09/22	KR 10-1092246 Bl	2011/12/15
		WO 2011-115357 A2	2011/09/22
		WO 2011-115357 A3	2011/11/10
KR 10-1844276 Bl	2018/04/02	None	
KR 10-2016091 Bl	2019/08/29	None	