(12) INTERNATIONAL APPLICATION PUBLISHED UNDER THE PATENT COOPERATION TREATY (PCT)

(19) World Intellectual Property Organization
International Bureau

(43) International Publication Date
16 March 2006 (16.03.2006)

PCT

(10) International Publication Number
WO 2006/028640 A2

(51) International Patent Classification: *H04Q 7/20* (2006.01)

(21) International Application Number: PCT/US2005/028449

(22) International Filing Date: 11 August 2005 (11.08.2005)

(25) Filing Language: English

(26) Publication Language: English

(30) Priority Data:
60/606,303 1 September 2004 (01.09.2004) US
10/977,452 29 October 2004 (29.10.2004) US

(71) Applicant *(for all designated States except US)*: **INTERDIGITAL TECHNOLOGY CORPORATION** [US/US]; 300 Delaware Avenue, Suite 527, Wilmington, DE 19801 (US).

(72) Inventors; and

(75) Inventors/Applicants *(for US only)*: **BRIANCON, Alain, Charles, Louis** [US/US]; 19328 Cissel Manor Drive, Poolesville, MD 20837 (US). **RAHMAN, Shamim, Abkar** [CA/CA]; 1700 Rene-Levesque Blvd. West, Apt. 1003, Montreal, Québec H3H 2V1 (CA). **ZAKI, Maged** [CA/CA]; 9260 Ceres, Apt. 202, Pierrefonds, Quebec H8Y 3N5 (CA).

(74) Agent: **BALLARINI, Robert, J.**; Volpe and Koenig, P.C., United Plaza, Suite 1600, 30 S. 17th Street, Philadelphia, PA 19103 (US).

(81) Designated States *(unless otherwise indicated, for every kind of national protection available)*: AE, AG, AL, AM, AT, AU, AZ, BA, BB, BG, BR, BW, BY, BZ, CA, CH, CN, CO, CR, CU, CZ, DE, DK, DM, DZ, EC, EE, EG, ES, FI, GB, GD, GE, GH, GM, HR, HU, ID, IL, IN, IS, JP, KE, KG, KM, KP, KR, KZ, LC, LK, LR, LS, LT, LU, LV, MA, MD, MG, MK, MN, MW, MX, MZ, NA, NG, NI, NO, NZ, OM, PG, PH, PL, PT, RO, RU, SC, SD, SE, SG, SK, SL, SM, SY, TJ, TM, TN, TR, TT, TZ, UA, UG, US, UZ, VC, VN, YU, ZA, ZM, ZW.

(84) Designated States *(unless otherwise indicated, for every kind of regional protection available)*: ARIPO (BW, GH, GM, KE, LS, MW, MZ, NA, SD, SL, SZ, TZ, UG, ZM,

[Continued on next page]

(54) Title: SUPPORT FOR MULTIPLE ACCESS POINT SWITCHED BEAM ANTENNAS

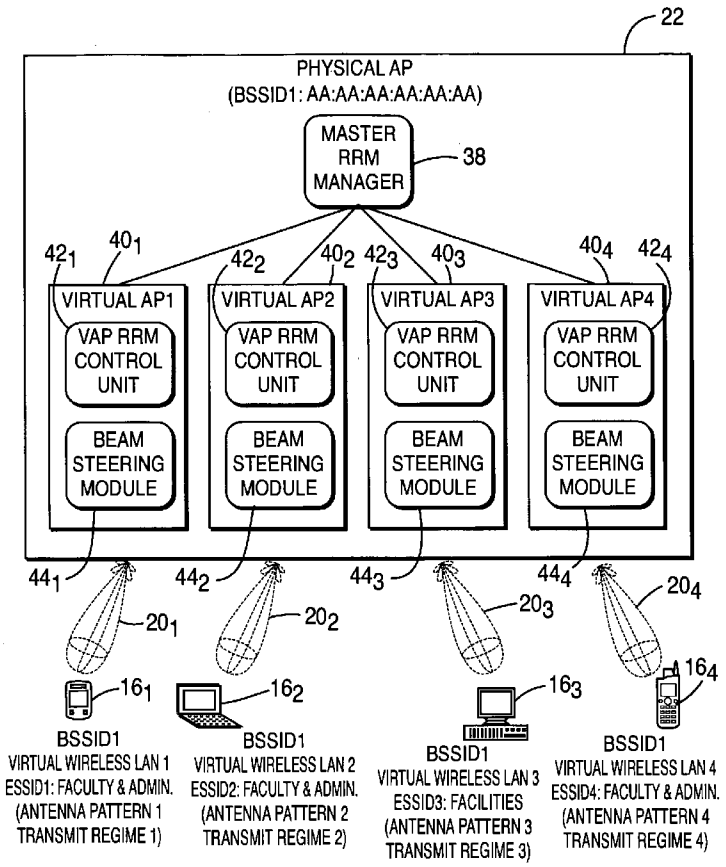

(57) Abstract: A plurality of virtual wireless networks are defined. Each of the plurality of virtual wireless networks has a different set of requirements. A node is capable of producing a plurality of antenna beams or patterns. Each virtual wireless network is associated with a unique group of the antenna beams or patterns. Users of each of the virtual wireless networks communicate using the antenna beams or patterns associated with that virtual wireless network.

WO 2006/028640 A2

Apple EX1038
Apple Inc. v. Secure Comm. Techs., LLC
IPR2026-00445

ZW), Eurasian (AM, AZ, BY, KG, KZ, MD, RU, TJ, TM), European (AT, BE, BG, CH, CY, CZ, DE, DK, EE, ES, FI, FR, GB, GR, HU, IE, IS, IT, LT, LU, LV, MC, NL, PL, PT, RO, SE, SI, SK, TR), OAPI (BF, BJ, CF, CG, CI, CM, GA, GN, GQ, GW, ML, MR, NE, SN, TD, TG).

Published:

— *without international search report and to be republished upon receipt of that report*

For two-letter codes and other abbreviations, refer to the "Guidance Notes on Codes and Abbreviations" appearing at the beginning of each regular issue of the PCT Gazette.

[0001] SUPPORT FOR MULTIPLE ACCESS POINT SWITCHED BEAM ANTENNAS

[0002] FIELD OF INVENTION

[0003] The invention generally relates to wireless communication systems. In particular, the invention relates to implementing multiple networks over common equipment.

[0004] BACKGROUND

[0005] As illustrated in Figure 1, as the demand for wireless services grows, multiple wireless networks may operate in a common area. Figure 1 is an illustration of multiple wireless networks operating in a common area, such as in a University environment. One network 10_1 (illustrated by a mixed dash and dotted line) is for faculty and administrators. A second network 10_2 (illustrated by a dashed line) is for students. A third network 10_3 (illustrated by a dotted line) is for facilities and security and a fourth network 10_4 (illustrated by a solid line) is for guests and visitors. Each of these networks 10_1, 10_2, 10_3, 10_4 (10) may have different requirements, such as quality of service (QoS) and security.

[0006] These networks 10 overlap as illustrated in Figure 1. In area 12_1, all four networks are present. In other areas 12_2 and 12_3, two of the networks are present. To reduce the costs of implementing multiple networks in a common network area, common equipment (hardware and software) can be used to implement these networks.

[0007] Figure 2 is an illustration of an access point (AP) 14 running multiple 802.11 type wireless networks. The access point 14 and the wireless transmit/receive units (WTRUs) 16_1, 16_2, 16_3, 16_4 (16) in the AP's effective operating area form a basic service set (BSS) 18. As illustrated, the BSS 18 has an associated BSS identification 1 (BSSID 1) code of "AA:AA:AA:AA:AA:AA". The AP 14 is also supporting four (4) virtual wireless local area networks (V-WLANs) 12, V-WLAN 1 12_1 (faculty and administrators), V-WLAN 2 12_2 (students), V-

WLAN 3 12_3 (facilities and security) and V-WLAN 4 12_4 (guests and visitors). Each V-WLAN 12 has an associated extension service set (ESS) linking the AP's portion of the V-WLAN 12, such as by layer 2, to other APs' portions of the V-WLAN 12. Each ESS has an associated ID, ESSID 1, ESSID 2, ESSID 3 and ESSID 4. The presentation of each of the multiple V-WLANs to the WTRUs 16 by the AP 14 can be referred to as a virtual AP (VAP). The use of VAPs reduces the number of physical APs 14 that are needed to implement multiple networks and allows for reduced interference and collisions.

[0008] Although the ESSIDs provide some segregation between the V-WLANs 12, different service requirements, such as QoS, are not readily segregated by ESSID. Accordingly, it is desirable to have alternate approaches for segregating (virtual) networks.

[0009] SUMMARY

[0010] A plurality of virtual wireless networks are defined. Each of the plurality of virtual wireless networks has a different set of requirements. A node is capable of producing a plurality of antenna beams. Each virtual wireless network is associated with a unique group of the antenna beams. Users of each of the virtual wireless networks communicate using the antenna beams associated with that virtual wireless network.

[0011] BRIEF DESCRIPTION OF THE DRAWING(S)

[0012] Figure 1 is an illustration of multiple overlapping wireless networks.

[0013] Figure 2 is an illustration of an access point supporting multiple V-WLANs.

[0014] Figure 3 is an illustration of virtual wireless network segregation using antenna beams or patterns.

[0015] Figure 4 is a simplified block diagram of an embodiment of an AP using virtual wireless network segregation using antenna beams or patterns.

[0016] Figure 5 is a simplified block diagram of an embodiment of a WTRU

using virtual wireless network segregation using antenna beams or patterns.

[0017] Figure 6 is an illustration of a radio resource management (RRM) embodiment using virtual wireless network segregation using antenna beams or patterns.

[0018] Figure 7 is a flow chart for an embodiment for handling a new service request.

[0019] DETAILED DESCRIPTION OF THE PREFERRED EMBODIMENT(S)

[0020] Although the features and elements of the present invention are described in the preferred embodiments in particular combinations, each feature or element can be used alone (without the other features and elements of the preferred embodiments) or in various combinations with or without other features and elements of the present invention.

[0021] Hereafter, a wireless transmit/receive unit (WTRU) includes but is not limited to a user equipment, station (STA), mobile station, fixed or mobile subscriber unit, pager, or any other type of device capable of operating in a wireless environment. When referred to hereafter, an access point (AP) includes but is not limited to a base station, Node-B, site controller, WLAN access point or any other type of interfacing device in a wireless environment.

[0022] Figure 3 is an illustration of virtual wireless network segregation using antenna beams or patterns. In this context, a pattern is a rapidly changing beam. Typically, the beam changes faster than most transmitter signal transitions. As illustrated in Figure 3, one AP 22 supports N virtual wireless networks 12_1 to 12_N. A virtual wireless network may include a virtual cellular network, V-WLAN, virtual wireless wide area network, virtual Bluetooth network, among others. Each virtual wireless network has one (as illustrated) or multiple antenna beams or patterns, 20_1 to 20_N (20), such as switched beams or patterns. As a result, WTRUs 16_{11}, 16_{12}, ... 16_{N1} (16) within each virtual wireless network are segregated by that virtual network's associated antenna beam(s) or pattern(s) 20. To illustrate, WTRU 16_{21} of virtual wireless network 12_2 is in a separate antenna beam 20_2 than WTRU 16_{31}, 16_{32} and 16_{33} of beam 20_3 of virtual

network 12_3. The segregation of the virtual wireless networks more readily facilitates: different QoSs, different air interfaces (such as IEEE 802.11b, 802.11g, 802.11k, 802.11n and 802.11e), different data types (such as voice and data), differentiate between providers/provider services/provider coverage areas, different WTRU behaviors (such as signal to noise ratio (SNR) thresholds, smart antenna/no smart antenna and power control), and differentiate between modulation, MAC framing and rate control between virtual wireless networks.

[0023] The beams or patterns 20 utilized for segregating the networks may be dynamic or fixed beams or patterns. When dynamic beams or patterns are used, the beams or patterns are preferably allocated by efficiently grouping WTRUs 16 within the same virtual network 12 within the same beams or patterns, such as illustrated in Figure 3. However, due to their physical proximity, it may be necessary to use multiple beams or patterns for one virtual network 12. To illustrate, if WTRU 16_{21} and WTRU 16_{N1} were in the same network, two beams or patterns 20_2 and 20_N may be used for that virtual network 12. If a fixed beam deployment is used, each virtual network 12 has one or multiple of the fixed beams or patterns associated with it. The beams or patterns associated with each network 12 is based on the WTRUs' locations with respect to the beams or patterns. Additionally, a combination of fixed and dynamic beams or patterns may be used for virtual network segregation.

[0024] The beams and patterns may also be manipulated in elevation. This allows for separation of users based on their elevation differences as well as distance from the AP 22. To illustrate, multiple omni-direction transmissions (with respect to the azimuth) may have a varying elevation or vertical displacement. Since the vertically displaced beams encounter the ground at different point, where the transmissions are absorbed or scattered, each omni-directional beam can have an associated distance. Furthermore, the elevation differences can be used for differing shaped beams in the azimuth, such as a single primary lobe, multiple lobes or other shapes. In general all the shaping that can be done in the azimuth plane, can also be done in the elevation plane. The overall characterizing of the patterns may be considered as being defined in

three dimensions.

[0025] Figure 4 is a simplified block diagram of an embodiment of an AP 22 capable of virtual network beams or patterns segregation. The AP 22 receives and sends wireless network messages using a distribution system 24 or in a cellular system, the cellular network. A virtual network segregation device 26 is utilized to segregate data between the virtual networks 12. A transceiver (Xceiver)/beam generation device 26 is used to produce the virtual network beams or patterns by an antenna array 30 and transfer the data to/from each WTRU 16. Broadcast messages may be sent in each beam or in an omni-directional manner. The components of Figure 4 may be implemented using a single integrated circuit (IC), such as an application specific integrated circuit (ASIC), multiple ICs, discrete components or a combination of IC(s) and discrete components.

[0026] Figure 5 is a simplified block diagram of an embodiment of a WTRU 16 capable of operating over different virtual networks. The WTRU 16 has an antenna or antenna array 32 for receiving or transmitting virtual network messages. A Xceiver 34 is used to in receiving and transmitting the messages. If the WTRU 16 employs smart antenna, a beam generation device 34 is also used in conjunction with receiving and/or transmitting messages. A virtual network decision device 36 is used to recover data from a virtual network 12 or multiple virtual networks 12 associated with the WTRU 16. The WTRU 16 may also be used in an ad hoc mode to extend the range of the virtual network 12. The WTRU 16 may operate to transfer messages from/to the AP 16 and another WTRU 16 or between WTRUs 16. The components of Figure 5 may be implemented using a single integrated circuit (IC), such as an application specific integrated circuit (ASIC), multiple ICs, discrete components or a combination of IC(s) and discrete components.

[0027] One approach to applying virtual wireless network segregation using antenna beams or patterns is in a WLAN type environment. In addition to segregating V-WLANs by ESSID, antenna beams or patterns (transmit power and antenna pattern) are used to segregate the V-WLANS. To illustrate, an ESSID 1 may be an IEEE 802.11b based V-WLAN and ESSID 2 may be an IEEE

802.11g based V-WLAN. If the WTRUs within these V-WLANs are separated, directed beams or patterns can be used to separate the users and improve the capacity of the cell. If users are in close physical proximity, a beam may support multiple V-WLANs distinguished by ESSID.

[0028] In such an implementation, each V-WLAN may be used to send broadcast information to its users or the AP may broadcast such information to all the users of the V-WLANs that it supports, such as by using an omni-direction transmission.

[0029] Due to the V-WLAN segregation, radio resource management (RRM) may be handled on each V-WLAN by its VAP separately from other V-WLANs. A master RRM can be used to handle RRM between the V-WLANS. Alternately, RRM may be handled jointly between VAPs. Additionally, as WTRUs move, the V-WLAN beams or patterns may need to be changed. To illustrate, the beam shaping/steering parameters may change to cover the moving WTRU. Additionally, the moving WTRU may be handled by a V-WLAN handover. One approach to handoff between V-WLANs uses internal inter access point protocol (IAPP) between VAPs/V-WLANs. Although each access point is primarily described above as being separate, multiple physical APs may be used to form one VAP supporting a larger portion or an entire V-WLAN.

[0030] Figure 6 is an illustration of an AP 22 using a master RRM 38 and a RRM 42_1, 42_2, 42_3 and 42_4 (42) for each VAP 40_1, 40_2, 40_3 and 40_4 (40). As illustrated in Figure 6, four VAPs 40 are controlled by one physical AP 22. Each VAP 40 has its own SSID, such as a unique ESSID. At least one WTRU 16 communicates over a respective antenna beam or pattern 20 of each VAP 40. The beam/pattern 20 is produced by a beam steering module 44_1, 44_2, 44_3 and 44_4 (44) in response to the RRM control unit 42_1, 42_2, 42_3 and 42_4 (42) of each VAP 40. The VAP RRM control unit 42 controls the radio resources for its VAP 40 under the direction of the master RRM manager 38. The master RRM manager 38 of the AP 22 controls the radio resources over all the VAPs 40 of the AP 22. The RRM manager 38 coordinates between the VAPs 40 and configures each VAP 40 to serve a specific service provider or service.

[0031] The configuration of Figure 6 allows for partitioning one physical AP 22 into multiple VAPs 40, which facilitates optimization of the beam steering/pattern algorithm for each VAP based on service requirements, devices supported features/version of standards and wireless medium conditions. Based on these criteria among others, the beam steering/pattern algorithm can be optimized to change transmit and receiver characteristics (power and antenna pattern) according to the ESSID of each VAP 40.

[0032] Figure 7 is a flow diagram for adding a new service using VAPs 40, such as in Figure 6. A new service request arrives at the physical layer, step 50. The request is directed to the master RRM manager 38 in the AP 22. The master RRM manager 38 checks the service parameters, such as service provider, QoS requirements, standard/version of standard, etc., step 52. The master RRM manager 38 checks to see if the service request can be served by an existing VAP 40 or whether a new VAP 40 is necessary, step 54. If an existing VAP 40 can serve the request and satisfy its service parameters, the service is added to the existing VAP 40, step 56. If no existing AP is able to serve the new request, the master RRM manager 38 spawns a new VAP 40, step 58, and passes the service parameters to the new VAP 40, step 60.

[0033] The VAP control unit 42 of either the existing or new VAP 40 checks other parameters, such as the station's behavior, features and standard version, step 62. The VAP 40 is configured by the VAP RRM control unit 42 with the appropriate MAC framing, rate control scheme, modulation and optimize the beam steering algorithm to satisfy service and station characteristics, step 64. The beam steering module 44 runs an optimized beam steering algorithm to control antenna pattern and transmission power, step 68.

* * *

CLAIMS

What is claimed is:

1. A method for segregating virtual wireless networks, the method comprising;

defining a plurality of virtual wireless networks, each of the plurality of virtual wireless networks having a different set of requirements;

providing a node capable of producing a plurality of antenna beams or patterns;

associating each virtual wireless network with a unique group of the antenna beams or patterns; and

communicating with users of each of the virtual wireless networks using the antenna beams or patterns associated with that virtual wireless network.

2. The method of claim 1 wherein each beam or pattern is only associated with a single one of the virtual wireless networks.

3. The method of claim 1 wherein the node is an access point having an antenna array.

4. The method of claim 1 further comprising:

for each virtual wireless network, identifying users of that virtual wireless network; and

dynamically shaping the antenna beams or patterns so that users of one of the virtual wireless networks are within the antenna beam or pattern associated with that one virtual wireless network.

5. The method of claim 1 wherein each virtual wireless network has a unique extended service set identification (ESSID).

6. The method of claim 5 wherein each antenna beam or pattern is associated with a unique ESSID.

7. The method of claim 5 wherein each ESSID has a set of antenna beams or patterns and a set of any ESSID does not have an antenna from the set of any other ESSID.

8. The method of claim 5 wherein an antenna beam or pattern of the antenna beams or patterns supports multiple virtual wireless networks.

9. The method of claim 1 wherein requirements of the different set of requirements includes at least one of quality of service (QoS), security, air interface, data type, provider, provider service, coverage area, signal to noise ratio (SNR) threshold, smart antenna/no smart antenna, power control and station behavior.

10. The method of claim 1 further comprising the node sending broadcast information to users of all the virtual wireless networks using an omni-directional transmission.

11. The method of claim 1 further comprising the node sending broadcast information to user of one of the virtual wireless networks over that wireless network.

12. The method of claim 1 for use in a wireless local area network and each virtual wireless network is a virtual wireless local area network (V-WLAN), the method further comprising performing radio resource management on each V-WLAN separately.

13. The method of claim 1 for use in a wireless local area network and each virtual wireless network is a virtual wireless local area network (V-WLAN), the method further comprising performing radio resource management on each V-WLAN and performing radio resource management across all V-WLANs.

14. The method of claim 1 for use in a wireless local area network and each virtual wireless network is a virtual wireless local area network (V-WLAN), the method further comprising performing radio resource management across all V-WLANs.

15. The method of claim 1 wherein the node is an access point, the method further comprising providing a plurality of access points and defining a virtual access point as including a plurality of physical access points supporting a single virtual wireless network.

16. An access point comprising;

a connection configured to transfer data associated with a plurality of virtual wireless networks, each of the plurality of virtual wireless networks having a different set of requirements;

an antenna array capable of producing a plurality of antenna beams or patterns, each of the virtual networks associated with an antenna beam or pattern;

a virtual wireless network segregation device for segregating the transferred data by the virtual wireless networks; and

a transceiver for communicating with users of each of the virtual wireless networks using the antenna beams or patterns associated with that virtual wireless network.

17. The access point of claim 16 wherein each beam or pattern is only associated with a single one of the virtual wireless networks.

18. The access point of claim 16 further wherein each virtual wireless network has a unique extended service set identification (ESSID).

19. The access point of claim 18 wherein each antenna beam or pattern is associated with a unique ESSID.

20. The access point of claim 18 wherein each ESSID has a set of antenna beams or patterns and a set of any ESSID does not have an antenna from the set of any other ESSID.

21. The access point of claim 16 wherein requirements of the different set of requirements includes at least one of quality of service (QoS), security, air interface, data type, provider, provider service, coverage area, signal to noise ratio (SNR) threshold, smart antenna/no smart antenna, power control and station behavior.

22. The access point of claim 16 wherein the antenna array sends broadcast information to users of all the virtual wireless networks using an omni-directional transmission.

23. The access point of claim 16 wherein the antenna array sends broadcast information to user of one of the virtual wireless networks over that wireless network.

24. The access point of claim 16 for use in a wireless local area network and each virtual wireless network is a virtual wireless local area network (V-WLAN), wherein the access point performing radio resource management on each V-WLAN separately.

25. The access point of claim 16 for use in a wireless local area network and each virtual wireless network is a virtual wireless local area network (V-WLAN), wherein the access point performing radio resource management on each V-WLAN and performing radio resource management across all V-WLANs.

26. The access point of claim 16 for use in a wireless local area network and each virtual wireless network is a virtual wireless local area network (V-WLAN), wherein the access point further comprising performing radio resource management across all V-WLANs.

27. The access point of claim 16 wherein the plurality of antenna beams or patterns are adjustable in the azimuth plane, elevation plane, or combination of both planes in regards to boresight angles relative to both planes in the case of beam forming, and power contour in both planes in the case of patterns.

28. The access point of claim 16 wherein the plurality of antenna beams or patterns communicate over differing distance.

29. The access point of claim 16 wherein the plurality of antenna beams or patterns include a plurality of omni-directional patterns in an azimuth and differing vertical angular displacements.

30. The access point of claim 29 wherein the plurality of omni-directional patterns communicate to differing distances from the access point.

31. An access point comprising;

means for transfering data associated with a plurality of virtual wireless networks, each of the plurality of virtual wireless networks having a different set of requirements;

means for producing a plurality of antenna beams or patterns, each of the virtual networks associated with an antenna beam;

means for segregating the transferred data by the virtual wireless networks; and

means for communicating with users of each of the virtual wireless networks using the antenna beams or patterns associated with that virtual wireless network.

32. The access point of claim 31 wherein each beam or pattern is only associated with a single one of the virtual wireless networks.

33. The access point of claim 31 further wherein each virtual wireless network has a unique extended service set identification (ESSID).

34. The access point of claim 33 wherein each antenna beam or pattern is associated with a unique ESSID.

35. The access point of claim 33 wherein each ESSID has a set of antenna beams or patterns and a set of any ESSID does not have an antenna from the set of any other ESSID.

36. The access point of claim 31 wherein requirements of the different set of requirements includes at least one of quality of service (QoS), security, air interface, data type, provider, provider service, coverage area, signal to noise ratio (SNR) threshold, smart antenna/no smart antenna, power control and station behavior.

37. The access point of claim 31 wherein the means for producing a plurality of antenna beams or patterns sends broadcast information to users of all the virtual wireless networks using an omni-directional transmission.

38. The access point of claim 31 wherein means for producing a plurality of antenna beams or patterns sends broadcast information to user of one of the virtual wireless networks over that wireless network.

39. The access point of claim 31 for use in a wireless local area network and each virtual wireless network is a virtual wireless local area network (V-

WLAN), wherein the access point performing radio resource management on each V-WLAN separately.

40. The access point of claim 31 for use in a wireless local area network and each virtual wireless network is a virtual wireless local area network (V-WLAN), wherein the access point performing radio resource management on each V-WLAN and performing radio resource management across all V-WLANs.

41. The access point of claim 31 for use in a wireless local area network and each virtual wireless network is a virtual wireless local area network (V-WLAN), wherein the access point further comprising performing radio resource management across all V-WLANs.

42. A wireless transmit/receive unit (WTRU) comprising:

at least one antenna for receiving and transmitting data;

a virtual wireless network decision device for transferring data of a virtual wireless local area network (V-WLAN) of the WTRU, the WTRU V-WLAN having an extended service set identification (ESSID) and is uniquely associated with an antenna beam or pattern.

43. The WTRU of claim 42 for extending a range of the V-WLAN by communicating between an access point and another WTRU of the V-WLAN.

44. A wireless transmit/receive unit (WTRU) comprising:

means for wirelessly receiving and transmitting data;

means for transferring data of a virtual wireless local area network (V-WLAN) of the WTRU, the WTRU V-WLAN having an extended service set identification (ESSID) and is uniquely associated with an antenna beam or pattern.

45. The WTRU of claim 44 for extending a range of the V-WLAN by communicating between an access point and another WTRU of the V-WLAN.

46. An integrated circuit comprising;

an input configured to transfer data associated with a plurality of virtual wireless networks, each of the plurality of virtual wireless networks having a different set of requirements;

an output configured to produce messages for radiation in a plurality of antenna beams or patterns, each of the virtual networks associated with an antenna beam or pattern;

a virtual wireless network segregation device for segregating the transferred data by the virtual wireless networks; and

a transceiver for communicating with users of each of the virtual wireless networks using the antenna beams or patterns associated with that virtual wireless network.

47. A method for adding a new service to a basic service set, the method comprising:

determining whether the new service can be supported by one of a plurality of existing virtual access points, each virtual access point being associated with different antenna beams or pattern; and

based on the determination, adding the new service to a selected one of the existing virtual access points or creating a new virtual access point for the new service.

48. The method of claim 47 further comprising configuring the selected one of the existing virtual access points or the new virtual access point to optimize a beam steering or pattern algorithm.

49. The method of claim 47 further comprising having a radio resource management control unit of the selected one of the existing virtual access points or the new virtual access point check station behavior, supported features and version of the standard for wireless transmit receive units of the new service.

50. The method of claim 49 wherein the determining whether the new service can be supported by one of the existing virtual access points and the adding or the creating is controlled by a master radio resource manager of the access point

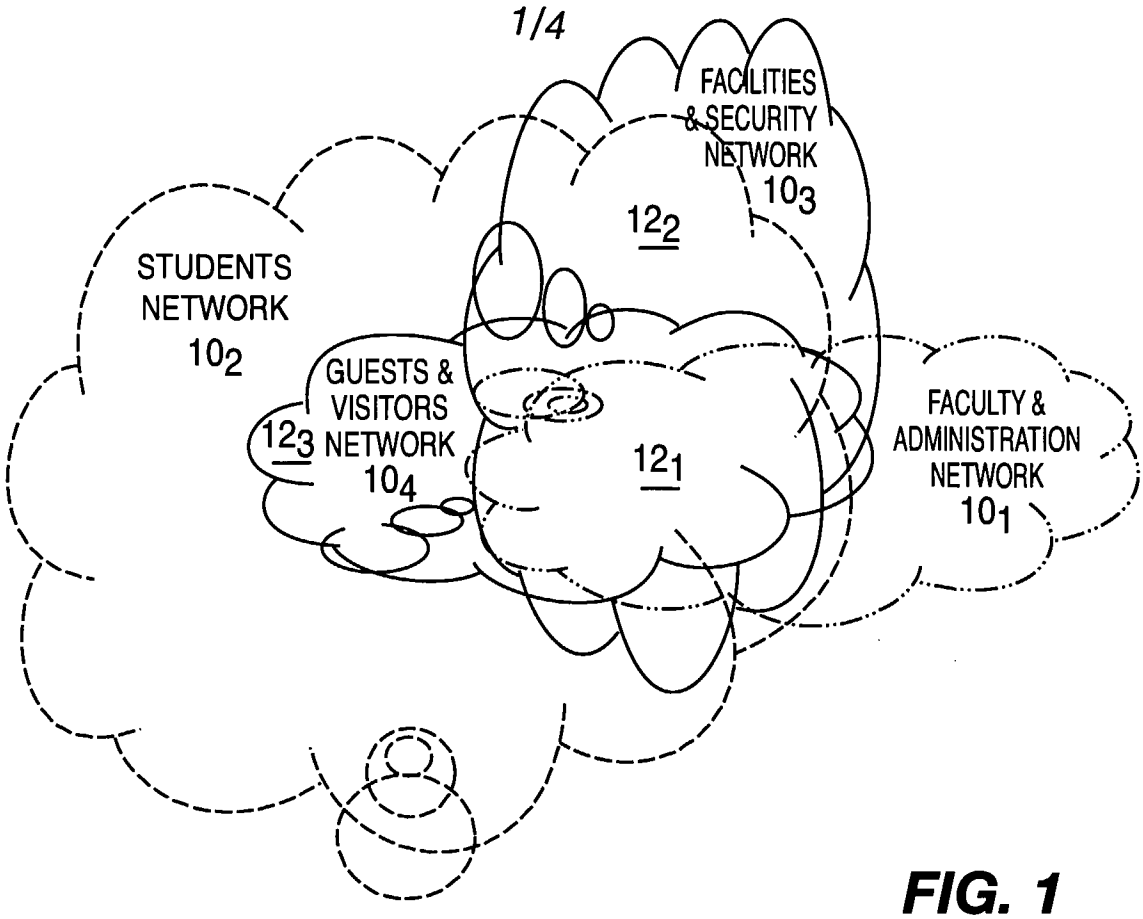
FACILITIES & SECURITY NETWORK
10_3
12_2
STUDENTS NETWORK
10_2
GUESTS & VISITORS NETWORK
10_4
12_3
12_1
FACULTY & ADMINISTRATION NETWORK
10_1

FIG. 1

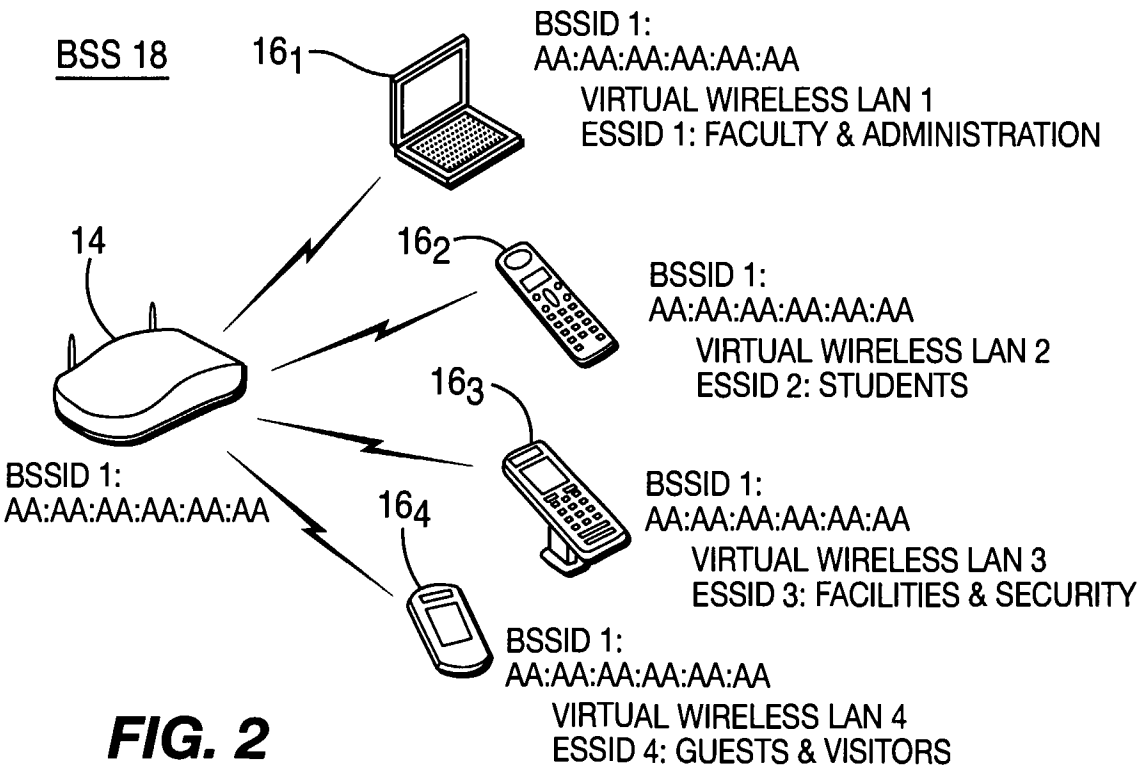
BSS 18
16_1
BSSID 1:
AA:AA:AA:AA:AA:AA
VIRTUAL WIRELESS LAN 1
ESSID 1: FACULTY & ADMINISTRATION
14
16_2
BSSID 1:
AA:AA:AA:AA:AA:AA
VIRTUAL WIRELESS LAN 2
ESSID 2: STUDENTS
16_3
BSSID 1:
AA:AA:AA:AA:AA:AA
VIRTUAL WIRELESS LAN 3
ESSID 3: FACILITIES & SECURITY
BSSID 1:
AA:AA:AA:AA:AA:AA
16_4
BSSID 1:
AA:AA:AA:AA:AA:AA
VIRTUAL WIRELESS LAN 4
ESSID 4: GUESTS & VISITORS

FIG. 2

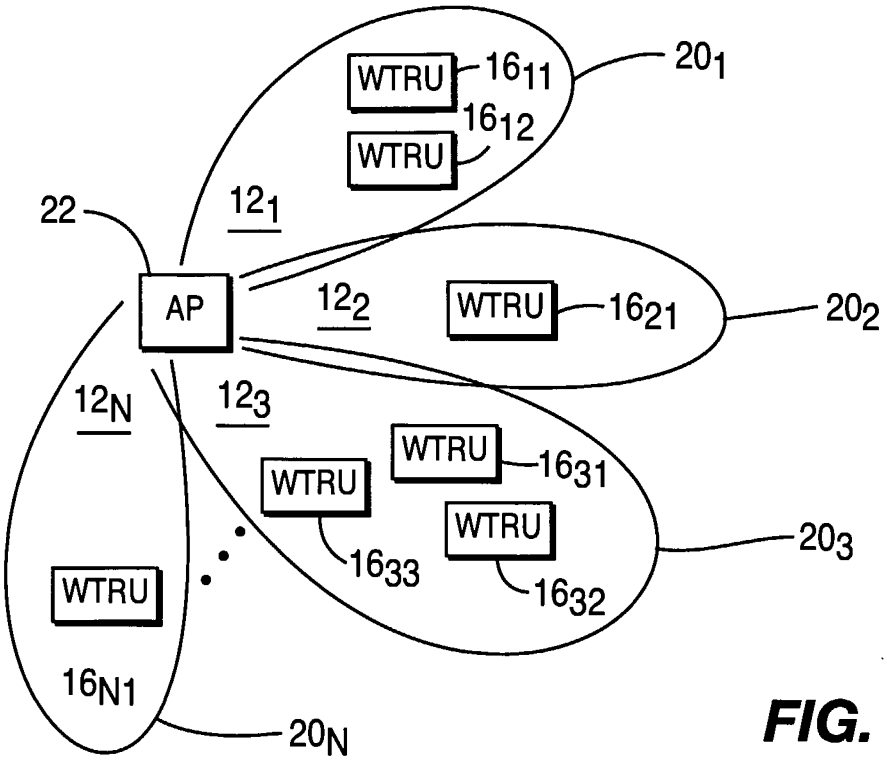

FIG. 3

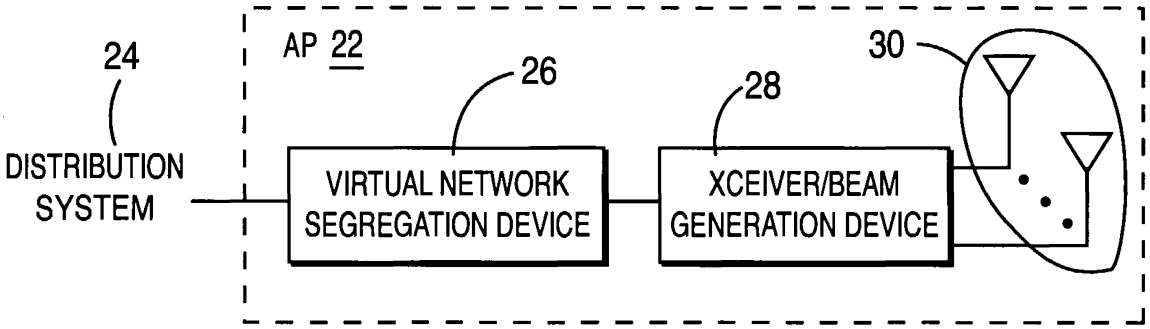

FIG. 4

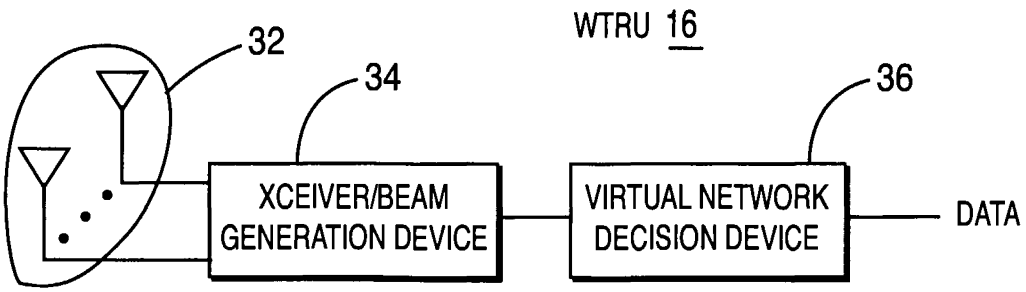

FIG. 5

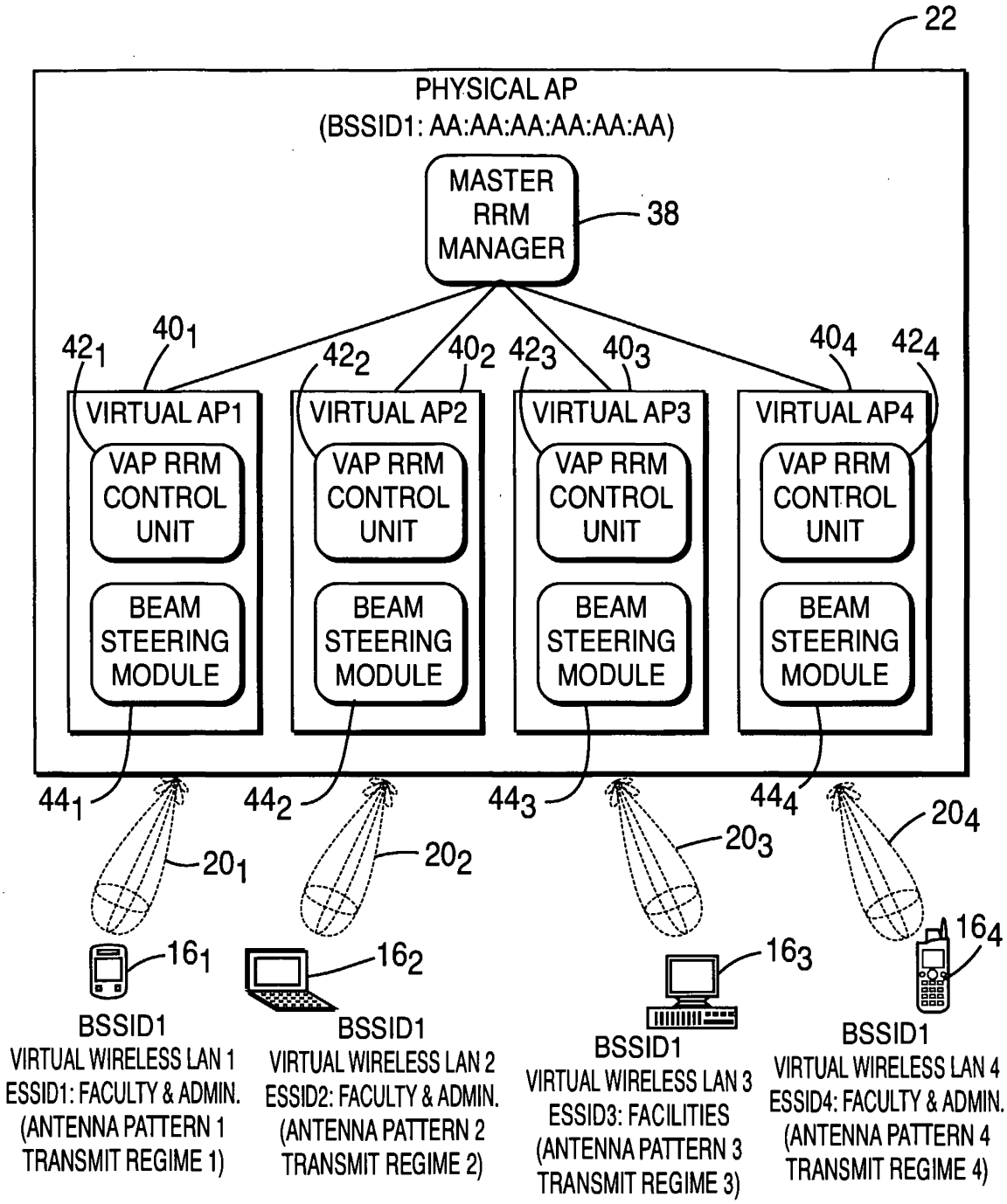
22
PHYSICAL AP
(BSSID1: AA:AA:AA:AA:AA:AA)
MASTER RRM MANAGER
38
42_1
40_1
42_2
40_2
42_3
40_3
40_4
42_4
VIRTUAL AP1
VIRTUAL AP2
VIRTUAL AP3
VIRTUAL AP4
VAP RRM CONTROL UNIT
BEAM STEERING MODULE
44_1
44_2
44_3
44_4
20_1
20_2
20_3
20_4
16_1
16_2
16_3
16_4
BSSID1
VIRTUAL WIRELESS LAN 1
ESSID1: FACULTY & ADMIN.
(ANTENNA PATTERN 1
TRANSMIT REGIME 1)
BSSID1
VIRTUAL WIRELESS LAN 2
ESSID2: FACULTY & ADMIN.
(ANTENNA PATTERN 2
TRANSMIT REGIME 2)
BSSID1
VIRTUAL WIRELESS LAN 3
ESSID3: FACILITIES
(ANTENNA PATTERN 3
TRANSMIT REGIME 3)
BSSID1
VIRTUAL WIRELESS LAN 4
ESSID4: FACULTY & ADMIN.
(ANTENNA PATTERN 4
TRANSMIT REGIME 4)

FIG. 6

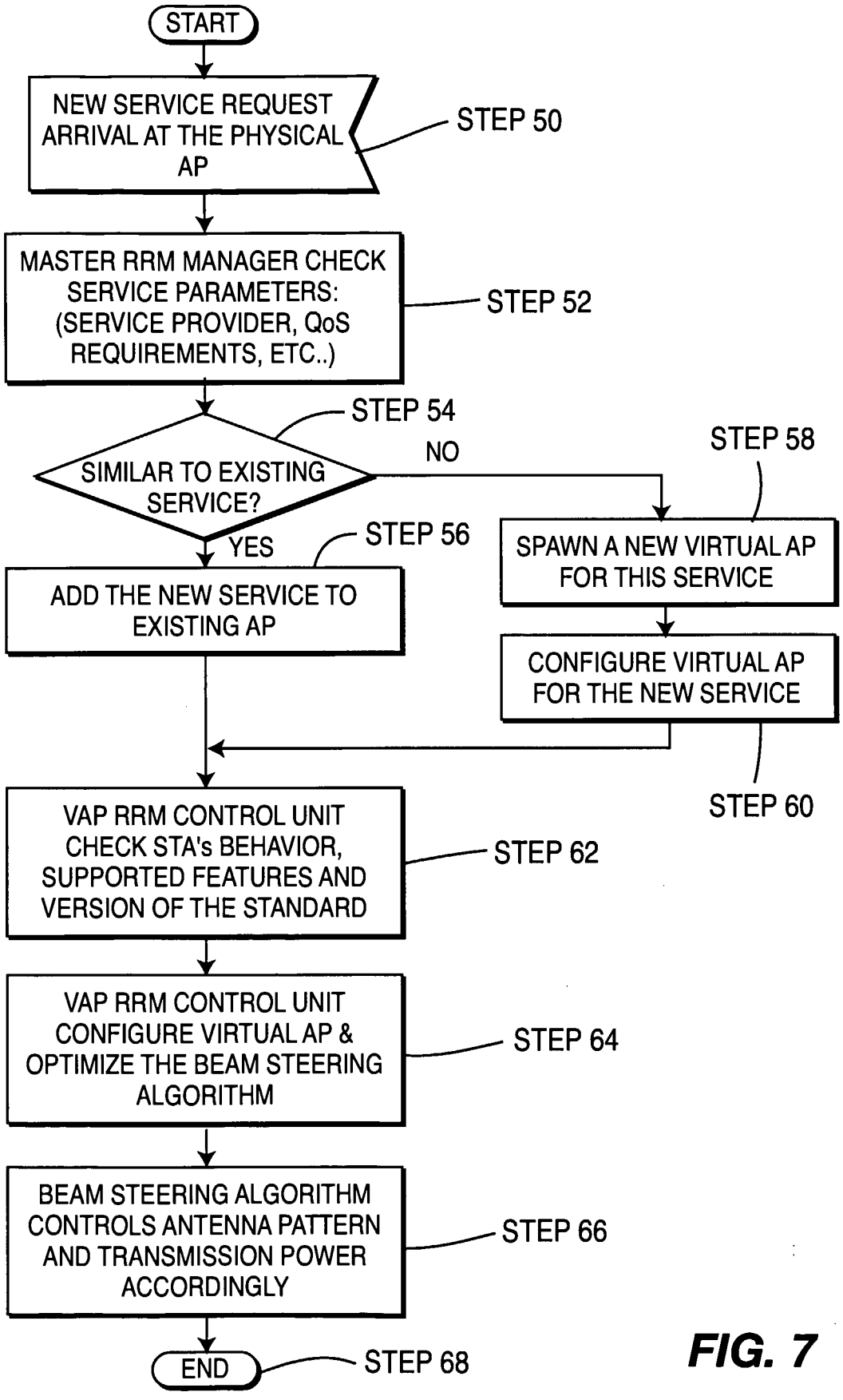
START
NEW SERVICE REQUEST ARRIVAL AT THE PHYSICAL AP
STEP 50
MASTER RRM MANAGER CHECK SERVICE PARAMETERS: (SERVICE PROVIDER, QoS REQUIREMENTS, ETC..)
STEP 52
STEP 54
SIMILAR TO EXISTING SERVICE?
NO
STEP 58
YES
STEP 56
SPAWN A NEW VIRTUAL AP FOR THIS SERVICE
ADD THE NEW SERVICE TO EXISTING AP
CONFIGURE VIRTUAL AP FOR THE NEW SERVICE
STEP 60
VAP RRM CONTROL UNIT CHECK STA's BEHAVIOR, SUPPORTED FEATURES AND VERSION OF THE STANDARD
STEP 62
VAP RRM CONTROL UNIT CONFIGURE VIRTUAL AP & OPTIMIZE THE BEAM STEERING ALGORITHM
STEP 64
BEAM STEERING ALGORITHM CONTROLS ANTENNA PATTERN AND TRANSMISSION POWER ACCORDINGLY
STEP 66
END
STEP 68

FIG. 7