Feb. 28, 1956 R. H. HARDIMON 2,736,110

SHOE

Filed July 31, 1953 2 Sheets-Sheet 1

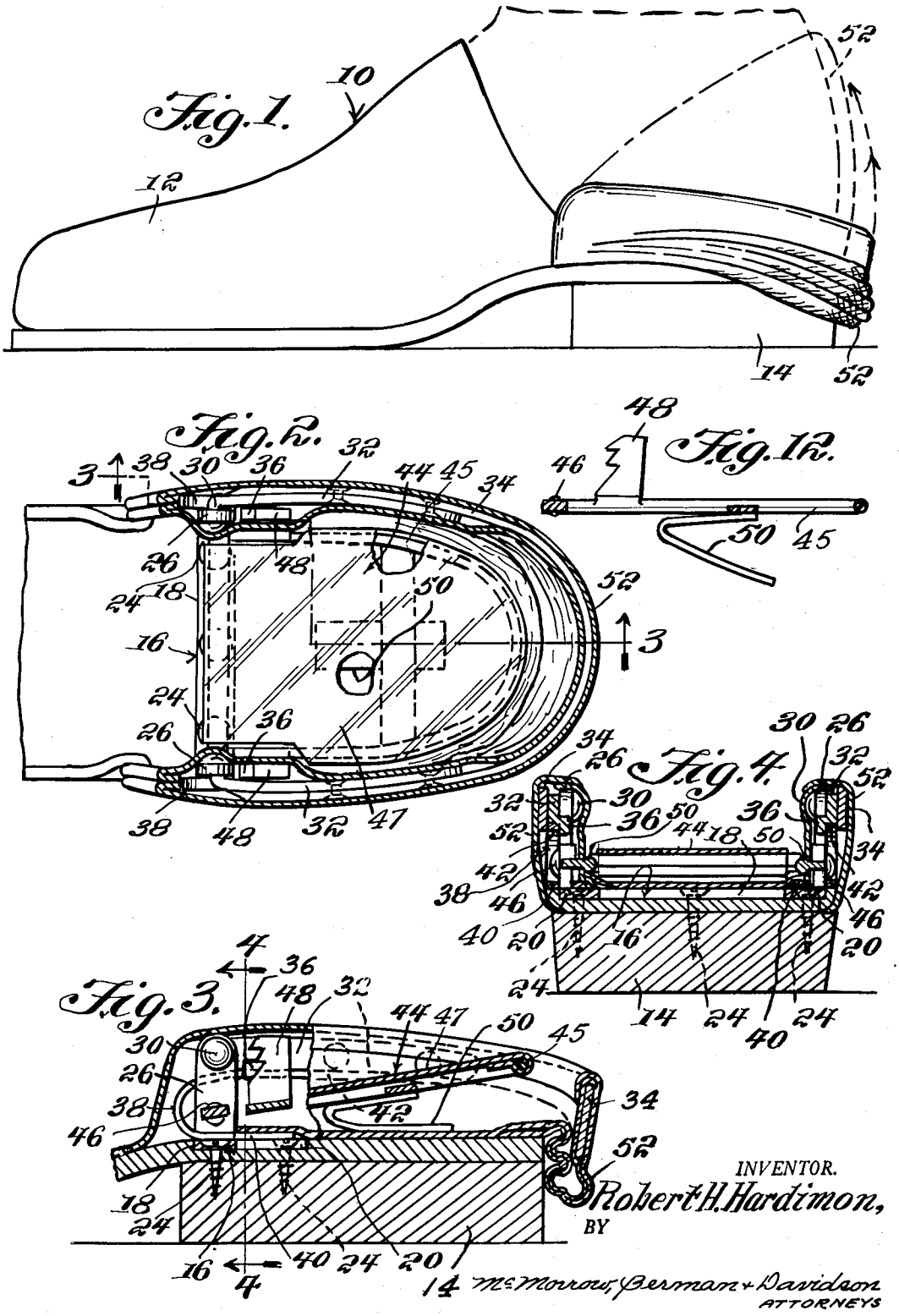

Skechers EX1017-p.1
Skechers v. FAST IP

Feb. 28, 1956 R. H. HARDIMON 2,736,110

SHOE

Filed July 31, 1953 2 Sheets-Sheet 2

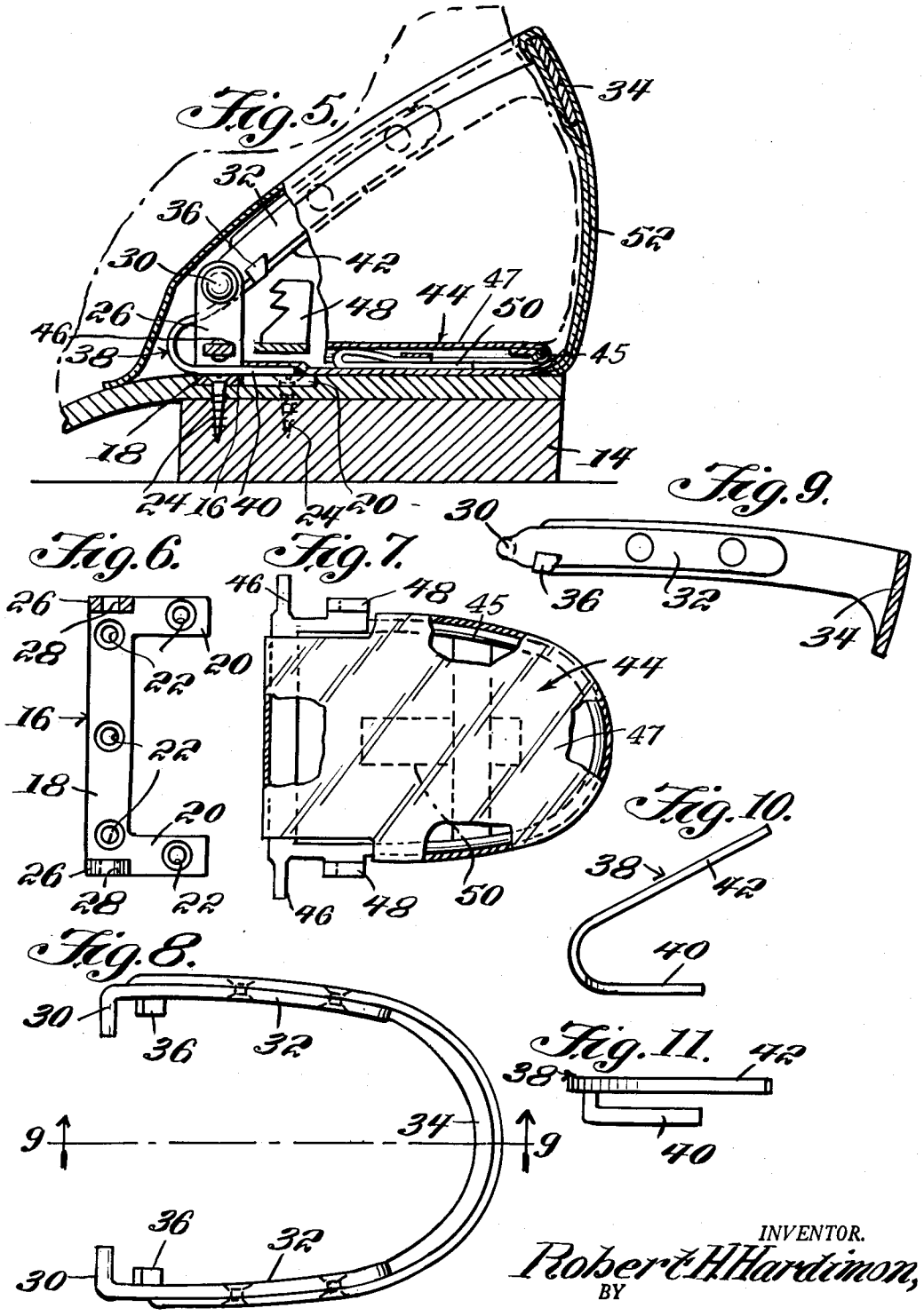

INVENTOR.
Robert H. Hardimon,
BY
McMorrow, Berman & Davidson
ATTORNEYS

Skechers EX1017-p.2
Skechers v. FAST IP

United States Patent Office

2,736,110

Patented Feb. 28, 1956

1

2,736,110

SHOE

Robert Henderson Hardimon, Memphis, Tenn.

Application July 31, 1953, Serial No. 371,575

6 Claims. (Cl. 36—58.5)

This invention relates to a shoe and more particularly to a shoe adapted for use by handicapped persons.

It is well known that shoes of ordinary construction present difficulties to handicapped persons as when a hand or arm is crippled it is difficult to tie shoe laces and otherwise to perform the ordinary operations required to fasten the shoes on the feet. Even the donning of shoes of the type having no laces present difficulties to the handicapped because of the fact that the use of such shoes frequently require the bending over and employment of shoe horns or the like in order to get the shoes properly adjusted on the feet.

The primary object of this invention is to facilitate the donning or doffing of a pair of shoes without requiring the use of the hands.

Another object is to eliminate the necessity of bending over to don or doff a pair of shoes.

The above and other objects may be attained by employing this invention which embodies among its features arms carried by a shoe heel to move in arcuate paths above the heel adjacent opposite sides thereof about a common axis adjacent the front of the heel, lugs carried by the arms and extending inwardly therefrom for movement in vertical arcuate paths above the heel, springs carried by the shoe heel and engaging the arms for yieldingly moving the arms upwardly, a treadle carried by the shoe heel for movement in a vertical arcuate path above the shoe heel about an axis which lies parallel to the common axis, toothed quadrants carried by the treadle and extending upwardly therefrom for movement therewith in arcuate paths which intersect the paths of movement of the lugs to engage said lugs and hold the arms against movement under the influence of the springs, an arched yoke carried by the arms and extending therebetween above the shoe heel to define a shoe counter and a flexible back carried by the heel and connected to the yoke for movement thereby into and out of extended position around the heel of the wearer.

In the drawings:

Figure 1 is a side view in elevation of a shoe embodying the features of this invention showing the heel back collapsed;

Figure 2 is a fragmentary horizontal sectional view through the shoe illustrated in Figure 1;

Figure 3 is a longitudinal sectional view taken substantially on the line 3—3 of Figure 2;

Figure 4 is a transverse sectional view taken substantially on the line 4—4 of Figure 3;

Figure 5 is a view similar to Figure 3, showing the heel back extended;

Figure 6 is a plan view of the mounting plate;

Figure 7 is a plan view of the treadle;

Figure 8 is a plan view of the arms and the arched yoke;

Figure 9 is a sectional view taken substantially on the line 9—9 of Figure 8;

Figure 10 is a side view of a spring;

2

Figure 11 is a plan view of the spring shown in Figure 10; and

Figure 12 is a longitudinal sectional view through the treadle spring.

Referring to the drawings in detail, a shoe designated generally **10** is provided with a conventional toe portion **12** and a heel **14**.

Secured to the heel **14** adjacent the forward end thereof is a mounting plate designated generally **16** (Fig. 6) comprising a bar **18** carrying at adjacent opposite ends laterally extending legs **20**. The bar **18** and legs **20** are provided with countersunk openings **22** for the reception of fasteners **24** by means of which the mounting plate **16** is secured to the heel **14**. Carried by the bar **18** and extending upwardly therefrom adjacent opposite ends thereof are ears **26** which are pierced with aligning openings **28**.

Mounted on pivots **30** which extend through the openings **28** for movement in vertical arcuate paths about a common axis above the heel **14** are arms **32** and carried by the arms and extending outwardly therefrom toward the rear of the heel **14** is an arched yoke **34** which is preferably formed of stiff leather to define a heel counter. Carried by the arms **32** and extending inwardly therefrom for movement in vertical arcuate paths above the heel **14** are lugs **36**, the purpose of which will hereinafter appear. Springs **38** carrying hooks **40** which partially embrace the ears **26** and bear on the bar **18** and legs **20** are provided with resilient fingers **42** which engage the under sides of the arms **32** to yieldingly urge said arms upwardly in their arcuate paths.

A treadle designated generally **44** comprises a U-shaped frame **45** provided adjacent one end with laterally extending aligned trunnions **46** which extend through aligned openings formed in the ears **26** below the openings **28** therein for movement in a vertical arcuate path above the heel **14** about an axis which lies parallel to and below said common axis through the pivots **30**. A cover **47** of leather or the like is carried by and extends across the frame **45**. Carried by the treadle **44** adjacent opposite sides thereof for movement with said treadle in arcuate paths which intersect the paths of movement of the lugs **36** are toothed quadrants **48**. Carried by the treadle **44** on the under side thereof is a spring **50** which tends to move the treadle **44** upwardly in its arcuate path above the shoe heel **14** to cause the toothed edges of the toothed quadrants **48** to advance into the paths of movement of the lugs **36**.

The arms **32** and the yoke **34** are covered with a suitable flexible material **52** such as leather and such covering **52** is secured at the bottom margin thereof to the shoe heel to form a covering which embraces the heel of the wearer when the shoe is in use.

In employing the shoe, assuming that it is in the full line position shown in Figure 1, the forepart of the foot is inserted in the toe portion **12** and upon exerting downward pressure on the treadle **44** by the heel of the wearer the treadle will pivot about the trunnions **46** and the teeth of the toothed quadrants **48** will disengage the lugs **36**, thus permitting the arms **32** to move upwardly under the influence of the springs **38**. The upward movement of the arms **32** will cause the yoke **34** to move upwardly and extend the covering **52** into heel embracing position as shown in broken lines in Figure 1. The yoke **34** in extending around the heel of the wearer will secure the shoe in place on the foot without the necessity of employing laces or the like. When it is desired to remove the shoe, downward pressure is exerted by the toe of the other foot on the yoke **34** to cause it to move downwardly against the effort of the springs **38** and simultaneously the heel of the foot from which the shoe is being removed is lifted from the treadle **44** to permit it

Skechers EX1017-p.3
Skechers v. FAST IP

to move upwardly under the influence of the spring 50 and advance the teeth of the toothed quadrants 48 into the paths of movement of the lugs 36 so as to engage the lugs and hold the arms 32 and yoke 34 against upward movement under the influence of the springs 38. In this way, the shoe may be readily applied to or removed from the foot without requiring the use of the hands.

While in the foregoing there has been shown and described the preferred embodiment of this invention, it is to be understood that minor changes in the details of construction, combination and arrangement of parts may be resorted to without departing from the spirit and scope of the invention as claimed.

What is claimed is:

1. In a shoe having a heel, arms carried by the heel to move in vertical arcuate paths above opposite sides of the heel about a common axis adjacent the front of the shoe heel, lugs carried by the arms and extending laterally therefrom for movement therewith in vertical arcuate paths, a treadle carried by the heel to move above the heel about an axis which lies parallel to the common axis, springs carried by the shoe heel for moving the arms upwardly in their arcuate paths, and toothed quadrants carried by the treadle for movement thereby in paths which intersect the paths of movement of the lugs to engage the lugs and hold the arms against movement under the influence of the springs.

2. In a shoe having a heel, arms carried by the heel to move in vertical arcuate paths above opposite sides of the heel about a common axis adjacent the front of the shoe heel, lugs carried by the arms and extending laterally therefrom for movement therewith in vertical arcuate paths, a treadle carried by the heel to move above the heel about an axis which lies parallel to the common axis, springs carried by the shoe heel for moving the arms upwardly in their arcuate paths, and toothed quadrants carried by the treadle for movement thereby in paths which intersect the paths of movement of the lugs to engage the lugs and hold the arms against movement under the influence of the springs, a flexible back carried by the heel and connected to the arms for embracing the heel of the wearer when his heel rests on the treadle.

3. In a shoe having a heel, arms carried by the heel to move in vertical arcuate paths above opposite sides of the heel about a common axis adjacent the front of the shoe heel, lugs carried by the arms and extending laterally therefrom for movement therewith in vertical arcuate paths, a treadle carried by the heel to move above the heel about an axis which lies parallel to the common axis, springs carried by the shoe heel for moving the arms upwardly in their arcuate paths, toothed quadrants carried by the treadle for movement thereby in paths which intersect the paths of movement of the lugs to engage the lugs and hold the arms against movement under the influence of the springs, a flexible back carried by the heel and connected to the arms for embracing the heel of the wearer when his heel rests on the treadle, and a sheath of cushioning material encasing the treadle for protecting the heel of the wearer.

4. In a shoe having a heel, a bar carried by the heel adjacent the forward end thereof, ears carried by the bar and extending upwardly therefrom adjacent opposite ends thereof, arms pivotally carried by the ears to move in vertical arcuate paths above the heel about a common axis, lugs carried by the arms and extending laterally therefrom for movement therewith in vertical arcuate paths above the heel, a treadle mounted on the ears to move in a vertical arcuate path above the heel about an axis which lies parallel to the common axis, springs carried by the ears and operatively engaged with the arms to urge the arms upwardly in their arcuate paths, and toothed quadrants carried by the treadle and extending upwardly therefrom and into the paths of movement of the lugs for engaging the lugs and holding the arms against movement under the influence of the springs.

5. In a shoe having a heel, arms carried by the heel to move in vertical arcuate paths above opposite sides of the heel about a common axis adjacent the front of the shoe heel, lugs carried by the arms and extending laterally therefrom for movement therewith in vertical arcuate paths, a treadle carried by the heel to move above the heel about an axis which lies parallel to the common axis, springs carried by the shoe heel for moving the arms upwardly in their arcuate paths, toothed quadrants carried by the treadle for movement thereby in paths which intersect the paths of movement of the lugs to engage the lugs and hold the arms against movement under the influence of the springs, and an arched yoke carried by the arms and adapted to embrace the back of the heel of the wearer when the shoe is on the foot.

6. In a shoe having a heel, arms carried by the heel to move in vertical arcuate paths above opposite sides of the heel about a common axis adjacent the front of the shoe heel, lugs carried by the arms and extending laterally therefrom for movement therewith in vertical arcuate paths, a treadle carried by the heel to move above the heel about an axis which lies parallel to the common axis, springs carried by the shoe heel for moving the arms upwardly in their arcuate paths, toothed quadrants carried by the treadle for movement thereby in paths which intersect the paths of movement of the lugs to engage the lugs and hold the arms against movement under the influence of the springs, an arched yoke carried by the arms and adapted to embrace the back of the heel of the wearer when the shoe is on the foot, and a flexible heel cover carried by the arms and the yoke and connected to the shoe heel.

References Cited in the file of this patent

UNITED STATES PATENTS

1,464,342	Rothacher	Aug. 7, 1923
1,686,175	Read	Oct. 2, 1928