US 20070234402A1

(19) United States

(12) Patent Application Publication

(10) Pub. No.: US 2007/0234402 A1

(43) Pub. Date: Oct. 4, 2007

Khosravi et al.

(54) HIERARCHICAL TRUST BASED POSTURE REPORTING AND POLICY ENFORCEMENT

(76) Inventors: **Hormuzd Khosravi**, Portland, OR (US); **David Durham**, Beaverton, OR (US); **Karanvir Grewal**, Hillsboro, OR (US)

Correspondence Address:
**INTEL CORPORATION**
**c/o INTELLEVATE, LLC**
**P.O. BOX 52050**
**MINNEAPOLIS, MN 55402 (US)**

(21) Appl. No.: **11/395,504**

(22) Filed: **Mar. 31, 2006**

**Publication Classification**

(51) **Int. Cl.**
*H04L 9/32* (2006.01)

(52) **U.S. Cl.** ..... **726/2**

(57) **ABSTRACT**

A method that includes initiating a network access request from an access requester on a platform that couples to a network, the network access request made to a policy decision point for the network. The method also includes establishing a secure communication channel over a communication link between the policy decision point and a policy enforcement point on the platform. Another secure communication channel is established over another communication link. The other communication link is between at least the policy enforcement point and a manageability engine resident on the platform. The manageability engine forwards posture information associated with the access requester via the other secure communication channel. The posture information is then forwarded to the policy decision point via the secure communication channel between the policy enforcement point and the policy decision point. The policy decision point indicates what access the access requester can obtain to the network based on a comparison of the posture information to one or more network administrative policies.

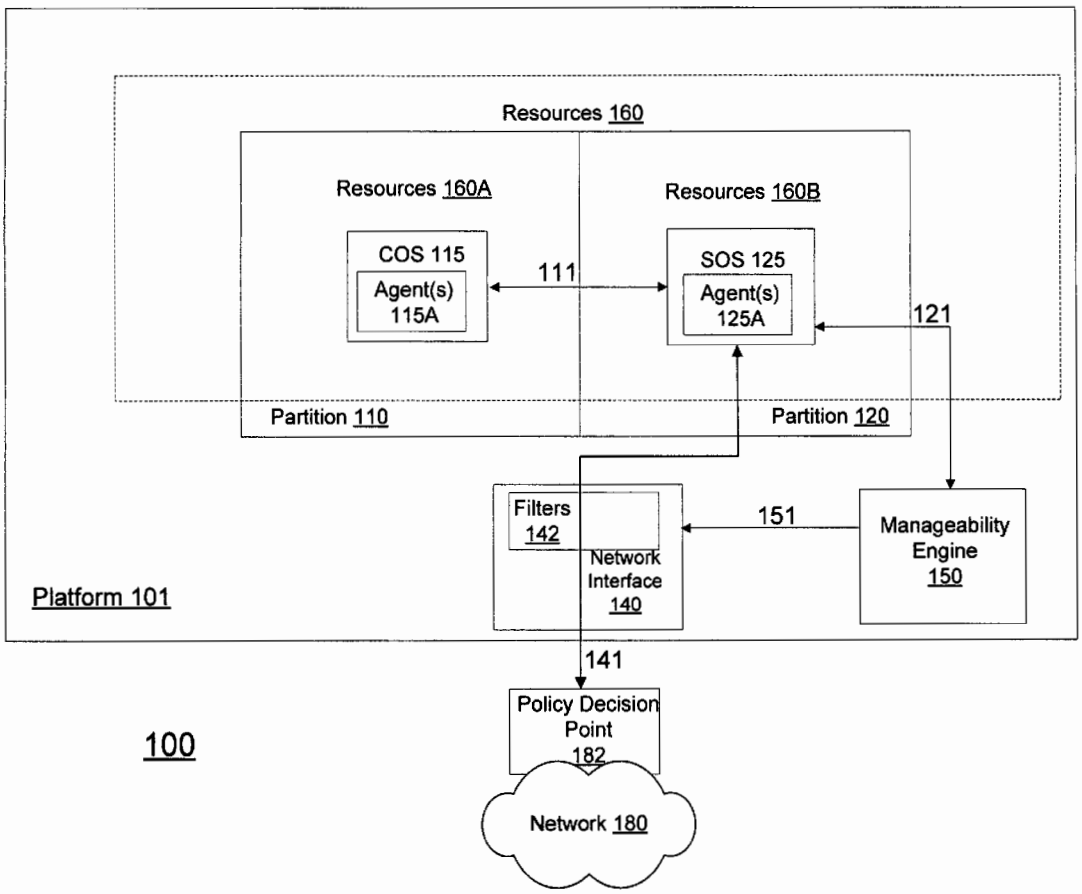

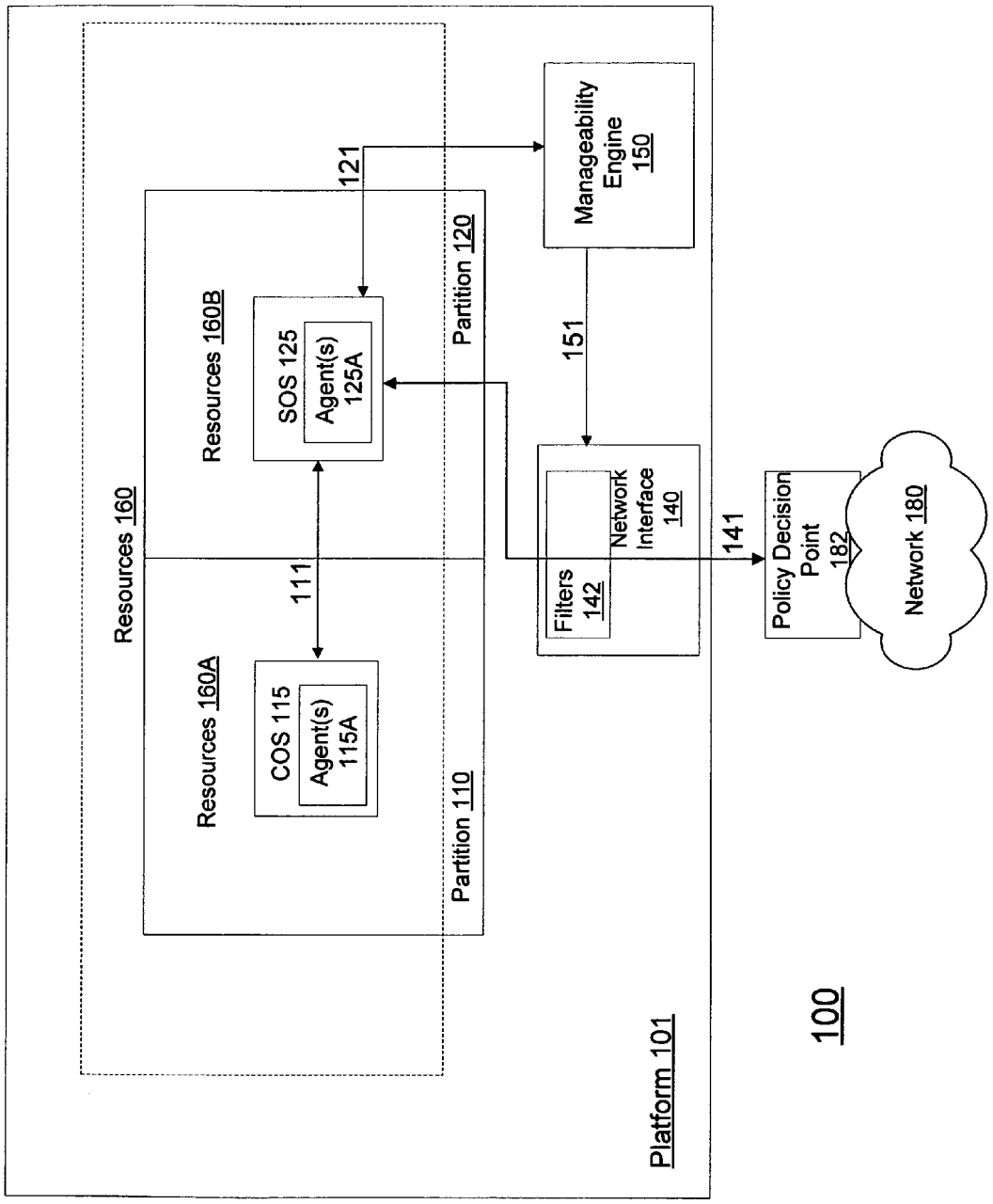
Platform 101
Resources 160
Resources 160A
Resources 160B
COS 115
Agent(s) 115A
SOS 125
Agent(s) 125A
111
121
Partition 110
Partition 120
Manageability Engine 150
151
Filters 142
Network Interface 140
141
Policy Decision Point 182
Network 180

100

FIG. 1

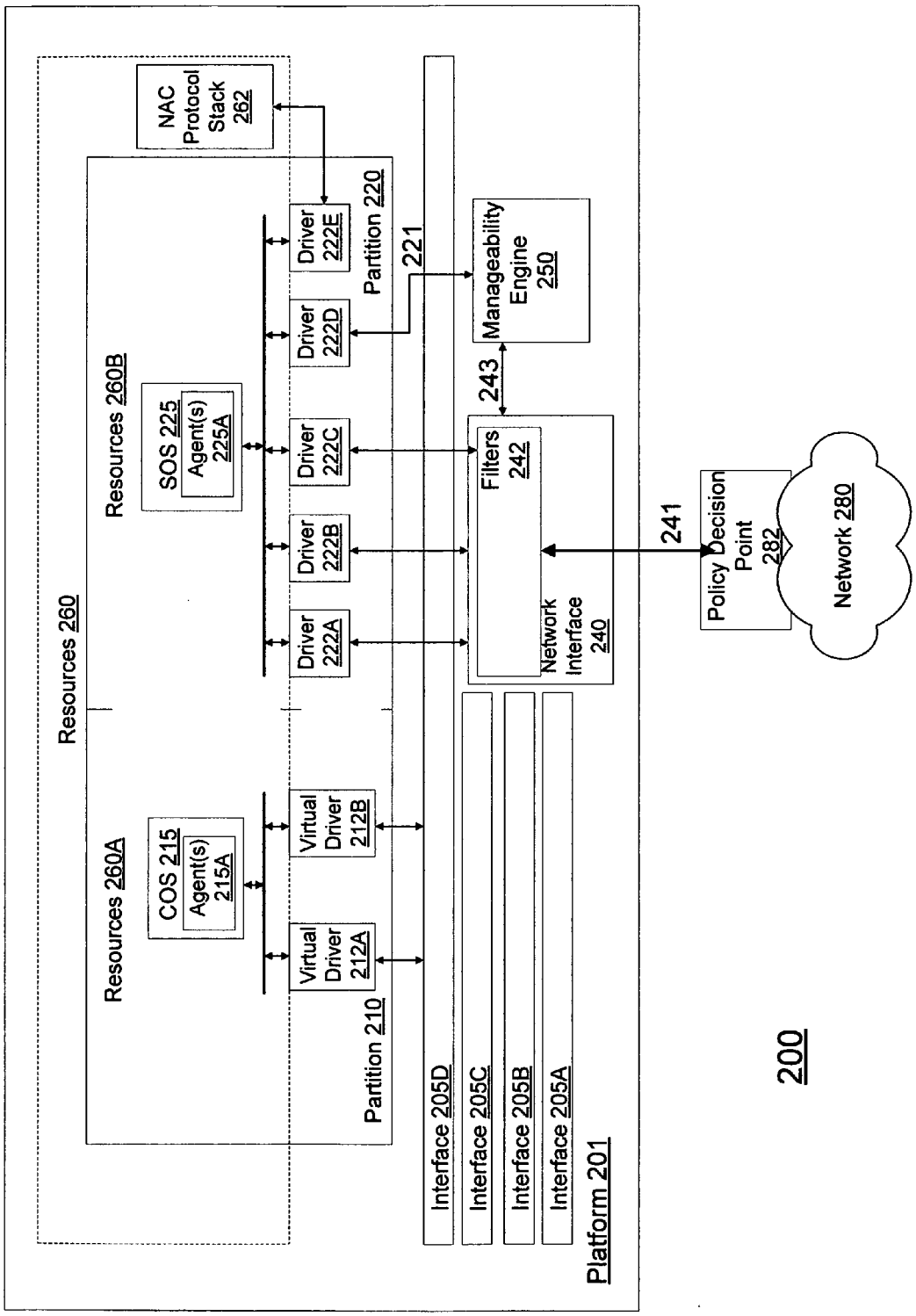
NAC Protocol Stack 262
Resources 260
Resources 260B
Resources 260A
SOS 225
Agent(s) 225A
COS 215
Agent(s) 215A
Driver 222E
Driver 222D
Driver 222C
Driver 222B
Driver 222A
Virtual Driver 212B
Virtual Driver 212A
Partition 220
Partition 210
221
Manageability Engine 250
243
Filters 242
Network Interface 240
241
Policy Decision Point 282
Network 280
Interface 205D
Interface 205C
Interface 205B
Interface 205A
Platform 201
200

FIG. 2

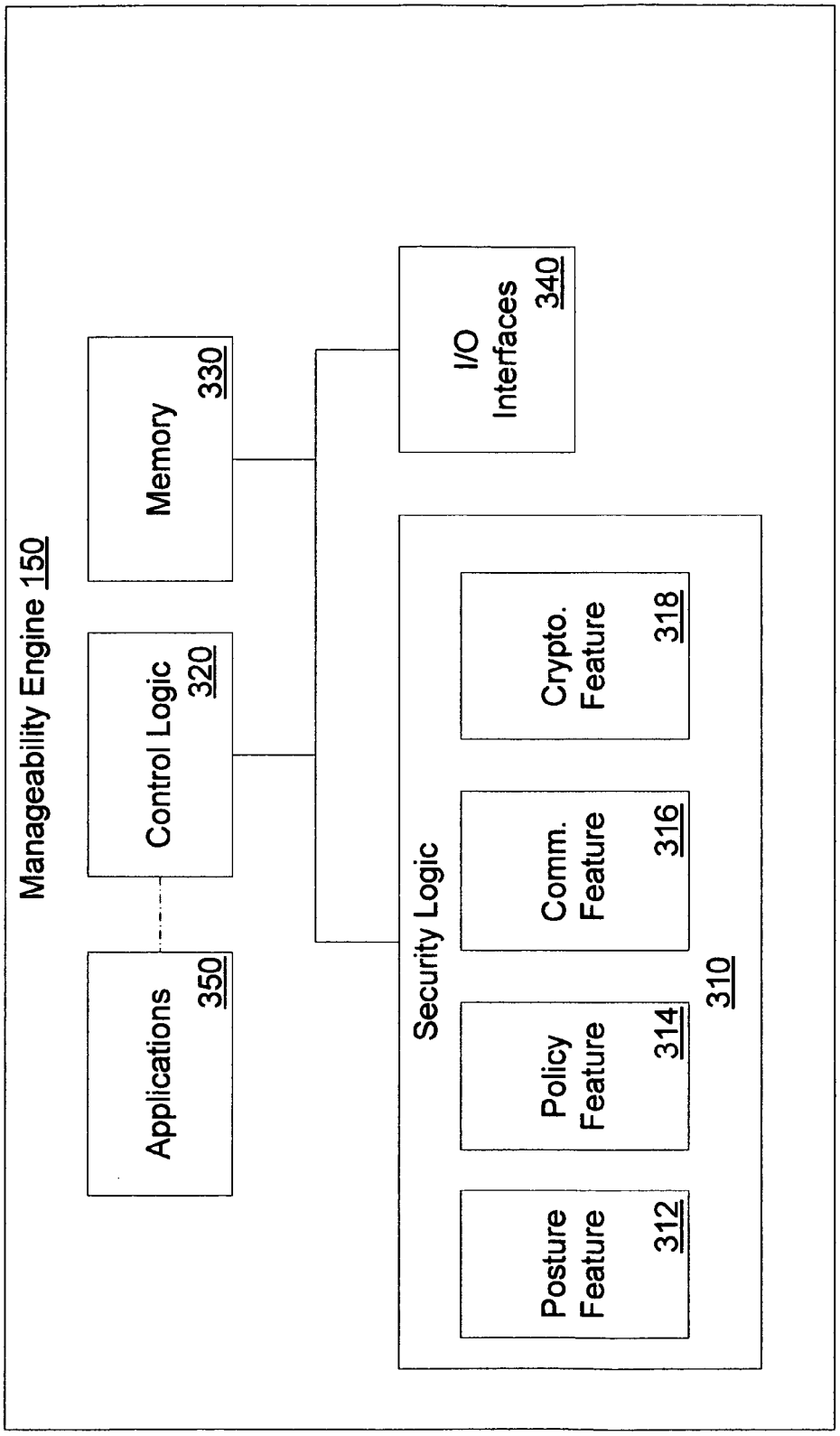
Manageability Engine 150
Applications 350
Control Logic 320
Memory 330
I/O Interfaces 340
Security Logic
Posture Feature 312
Policy Feature 314
Comm. Feature 316
Crypto. Feature 318
310

FIG. 3

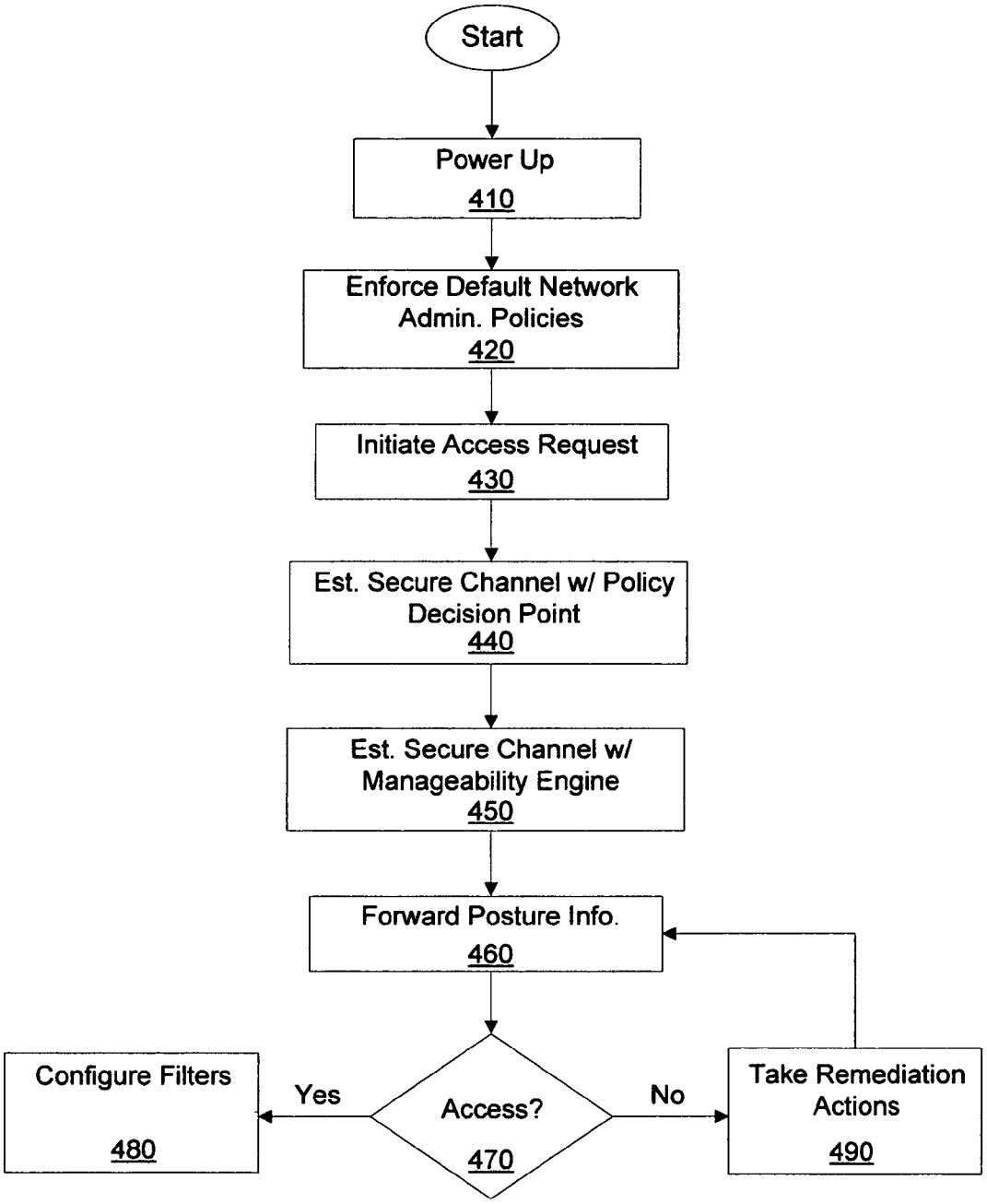
Start
Power Up
410
Enforce Default Network Admin. Policies
420
Initiate Access Request
430
Est. Secure Channel w/ Policy Decision Point
440
Est. Secure Channel w/ Manageability Engine
450
Forward Posture Info.
460
Access?
470
Yes
No
Configure Filters
480
Take Remediation Actions
490

FIG. 4

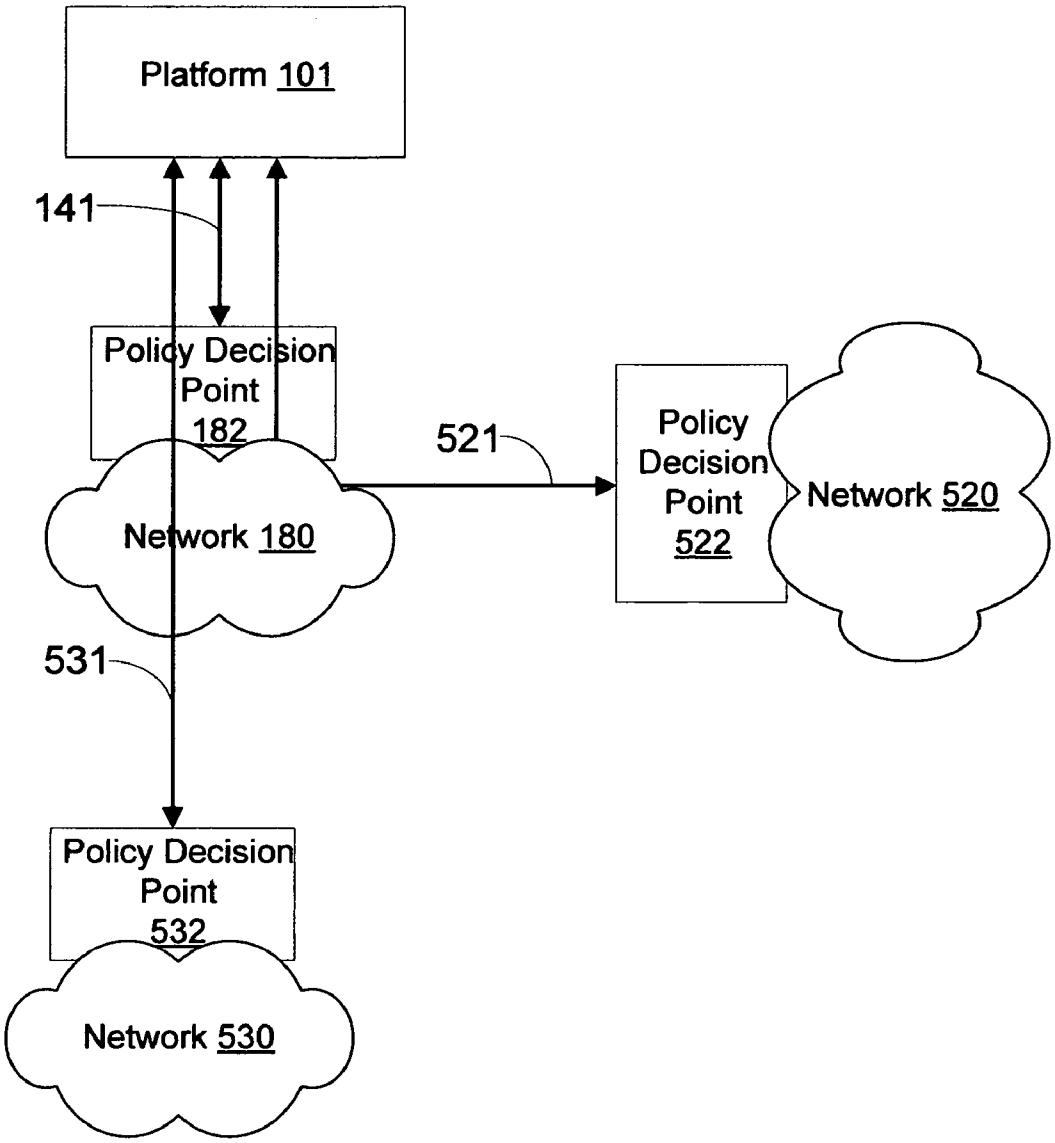
Platform 101
141
Policy Decision Point 182
Network 180
521
Policy Decision Point 522
Network 520
531
Policy Decision Point 532
Network 530

FIG. 5

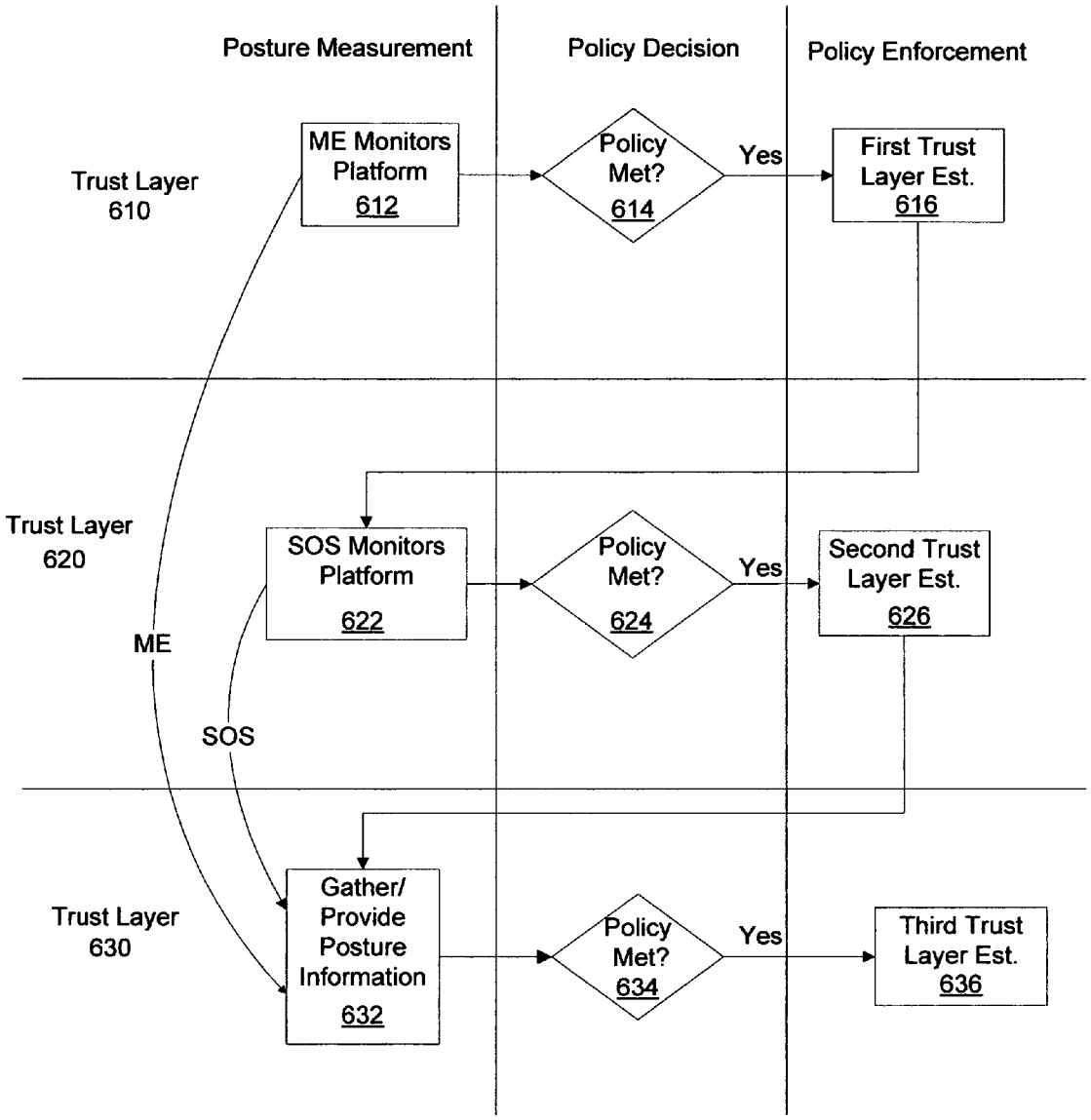
Posture Measurement
Policy Decision
Policy Enforcement
Trust Layer 610
ME Monitors Platform 612
Policy Met? 614
Yes
First Trust Layer Est. 616
Trust Layer 620
SOS Monitors Platform 622
Policy Met? 624
Yes
Second Trust Layer Est. 626
ME
SOS
Trust Layer 630
Gather/ Provide Posture Information 632
Policy Met? 634
Yes
Third Trust Layer Est. 636

FIG. 6

# HIERARCHICAL TRUST BASED POSTURE REPORTING AND POLICY ENFORCEMENT

## BACKGROUND

[0001] With the recent rise in virus and worm attacks, industry efforts have emerged to harden computing devices coupled to a network against these attacks and also to install measures for protecting the network from attack-prone computing devices. This has resulted in a number of industry initiatives to define proprietary and standards based network security frameworks and communication protocols. When employed, these standards based network security frameworks may contain or counteract virus or worm attacks. Additionally, the Institute for Electrical and Electronic Engineers (IEEE) and the Internet Engineering Task Force (IETF) standards bodies have defined or are in the process of defining communication protocols which may be leveraged to provide additional network security. These industry initiatives seek to provide strict access control for computing devices to connect to a network.

[0002] Countermeasures defined to protect against network attacks have primarily taken the form of Open Systems Interconnection (OSI) layer 2, IEEE 802.1X communication protocols. See IEEE 802.1X-2001, published Oct. 25, 2001 ("IEEE 802.1X"), and/or later versions. These communication protocols typically leverage IETF defined Extensible Authentication Protocol (EAP) and associated derivatives to determine a computing device's credentials, before the device or any element residing/operating on the device is allowed access to the network. See IETF, Network Working Group, Request for Comments: 3748, Extensible Authentication Protocol, published June 2004 ("RFC 3748"), and/or later versions.

[0003] Once initial authentication has been performed (e.g., via IEEE 802.1X and/or RFC 3748) and a computing device has been granted access to the network, an additional protocol may be executed which maintains a secure communication channel over which all subsequent data is carried. This secure communication channel offers cryptographic services such as data origin authenticity and data confidentiality. As a result, the most predominant security threats are likely prevented or contained. For wireless network access, this secure communication channel may operate in compliance with IEEE 802.11i-2004, published July 2004 ("IEEE 802.11i"), and/or later versions. For wired network access, the secure communication channel may operate in compliance with two related specifications to EEE 802.1X. The first is IEEE 802.1AE, Draft 5.1, published January 2006 ("IEEE 802.1AE"), and/or later drafts or revisions. The second is an amendment to IEEE 802.1X, and is IEEE 802.1AF, Draft 0.4, published January 2006, ("IEEE 802.1AF"), and/or later drafts or revisions. Additionally, OSI Layer 3 and Layer 4 industry initiatives for secure communication channels also exist. These OSI Layer 3 and Layer 4 initiatives include one for Internet Protocol Security (IPsec)—IETF, Network Working Group, RFC 2401, Security Architecture for the Internet Protocol, published November 1998 ("RFC 2401"), and another one for Transport Layer Security (TLS)—IETF, Network Working Group, RFC 2246, The TLS Protocol Version 1.0, published January 1999 ("RFC 2246").

[0004] Regardless of the efforts taken to harden computing devices against virus and worm attacks to protect a given network, research has shown that within a typical corporate wired network, the majority of security breaches stem from inside the network. These breaches may be intentional or as a side affect of negligence on the part of the user of a computing device. For example, in today's environment, many users have mobile computing devices (e.g., notebook computers), which are used within the corporation, as well as from the home. Within the corporation, some degree of control may be enforced for accessing network resources. However, when the typical user connects a computing device to the Internet from an external source (home, hotel, Internet cafe), he/she may inadvertently download a virus/worm when visiting an insecure site on the Internet. This virus/worm can be transferred to the corporate network at the computing device's next connection to the network. Even within the corporation, policies may not always be enforced—e.g. a user not always updating the latest anti-virus data file from the corporate site. Thus exposing the network to possible attacks by new viruses or worms.

[0005] Traditional technologies allow validation of the identity and state of a computing device (e.g., via integrity or posture measurements) after an access request to the network is initiated. The IEEE 802.1X model provides a framework for carrying additional protocols such as EAP, which provide capabilities for exchanging a computing device's authenticated identity and posture information prior to allowing at least some access to the network. This aids in controlling any malicious device/software from entering onto the network, without prior evaluation. This is achieved by providing a security solution at the lowest common denominator of the network stack and performing authentication before a computing device is allowed to acquire an IP address. However, unauthorized or rogue agents may still gain access by mimicking an authorized computing device or spoofing the authentication process.

## BRIEF DESCRIPTION OF THE DRAWINGS

[0006] FIG. **1** is an illustration of elements of an example system;

[0007] FIG. **2** is an illustration of an example system including a virtualization technology enabled platform;

[0008] FIG. **3** is a block diagram of an example architecture for a manageability engine;

[0009] FIG. **4** is a flow chart of an example method to obtain network access;

[0010] FIG. **5** is an illustration of an example system including a platform obtaining access to multiple networks; and

[0011] FIG. **6** is a flow chart of an example method to establish multiple layers of hierarchical trust to obtain network access.

## DETAILED DESCRIPTION

[0012] As mentioned above, industry efforts have emerged to harden computing devices against virus and worm attacks and install measures for containing the spread of these attacks from rogue agents against networks. As described in more detail below, a high amount of trust is needed for computing devices that couple to the network to protect a network from these rogue agents that may attack a network.

For example, trust based on information such as the computing device and/or its elements being who or what they claim to be and also information that may detect when rogue agents have compromised that trust. The level of trust based on this information may be used to determine what access the computing device and/or its elements may obtain to the network and or what remediation actions are needed if access is denied.

[0013] In one implementation, a computer network (or, simply, a network) is two or more interconnected computing devices that provide voice or data processing. The term "network boundary" may refer to a logical boundary between a network and the computing devices that are outside of the network. Various network access schemes exist to control access to a network boundary. One example of a network access scheme to control network access involves three network entities: an access requester, a policy enforcement point, and a policy decision point.

[0014] In this example network access scheme, an access requester is an entity that seeks access to a network (e.g., to a protected network). The access requester usually resides within a platform for a computing device. Almost any computing device, platform or element (e.g., hardware, software, firmware or a combination of these elements) within a platform may be an access requester. A characteristic of an access requester, for example, is a capability to initiate a request to access a network.

[0015] A policy enforcement point, in this example network access scheme, is an entity that enforces the access decisions of the policy decision point. The policy enforcement point may also engage in an authentication/authorization process with the access requester and forward the results of the authentication/authorization process to the policy decision point. A policy enforcement point is implemented, for example, at a switch, at a firewall, as part of a Virtual Private Network (VPN) gateway and/or on the platform of a computing device via hardware, software or some combination of both hardware and software.

[0016] The policy decision point, in this example network access scheme, is a network entity that decides whether to grant network access rights to an access requester based, for example, on a network administrative policy. These network administrative policies may include one or more access control policies to determine who or what may access the network. The network administrative policies may also include one or more outbreak containment policies, intrusion detection policies, and/or monitoring policies, and the like. In one example, the policy decision point is implemented in a server coupled between the network and the policy enforcement point. In an alternate example, the policy enforcement point and the policy decision point are implemented as two logical components/elements which are physically co-located (e.g., on a platform of a computing device, in a network switch, a network server, etc.).

[0017] In one example, a network access request is initiated from an access requester on a platform that couples to a network. The network access request is made to a policy decision point for the network. A secure communication channel is established over a communication link between the policy decision point and a policy enforcement point on the platform. A secure communication channel is also established over another communication link, the other communication link between at least the policy enforcement point and a manageability engine resident on the platform. In this example, the manageability engine forwards posture information associated with the access requester and the manageability engine. The posture information is forwarded via the secure communication channel between the manageability engine and the policy enforcement point. The posture information is then forwarded to the is policy decision point via the secure communication channel between the policy enforcement point and the policy decision point. The policy decision point is to indicate what access the access requester can obtain to the network based on a comparison of the posture information to one or more network administrative policies.

[0018] FIG. **1** is an illustration of elements of an example system **100**. In one example, system **100** includes the three network entities described above to implement a network access scheme. These three network entities are described in more detail below as elements on platform **101** and/or part a network coupled to platform **101**.

[0019] As depicted in FIG. **1**, system **100** includes platform **101** to couple to network **180** through policy decision point **182** via communication link **141**. In one example, communication link **141** includes wired and/or wireless pathways via which platform **101** couples to network **180**.

[0020] In one implementation, as mentioned above, platform **101** is part of a computing device. This computing device may be a desktop computer, a laptop computer, a notebook computer, a server, a digital broadband telephony device, a digital home network device (e.g., cable/satellite/set top box, etc.), a personal digital assistant (PDA) and the like. In one example, network **180** includes, but is not limited to, a wired or a wireless local area network (LAN/WLAN), a wide area network (WAN/WWAN), a metropolitan area network (MAN), a personal area network (PAN) and a cellular or a wireless broadband telephony network.

[0021] In one example, platform **101** includes the software, hardware, and/or firmware to support one more functions for a computing device. These tasks may include client/host activities, storage, general processing tasks, etc. At least a portion of this software, hardware, and/or firmware is depicted in FIG. **1** as resources **160**. In one implementation, resources **160**A and **160**B represent memory and processing elements that are dedicated to or used independently by partitions **110** and **120**, respectively. Although platform **101** is shown with only two partitions, this disclosure is not limited to two partitions but any number of partitions on a platform in a computing device is possible. As will be described for FIG. **2**, these partitions may be part of a virtualization technology enabled platform.

[0022] In one implementation, partition **110** includes a capability operating system (COS) **115**. COS **115**, in one example, represents those elements that respond to a user's request to process data or carry out a user initiated function for a computing device. COS **115** is depicted as including agent(s) **115**A. Agent(s) **115**A, for example, include one or more agents to facilitate initiation of an access request to network **180** and to maintain a secure communication channel between a policy enforcement point and/or a policy decision point once access is granted.

[0023] In this implementation, partition **120** includes service operating system (SOS) **125**. SOS **125**, in one example,

provides a secure execution environment (not shown) for network access control (NAC) communication protocols (e.g., IEEE 802.1X and/or RFC 3748). Additionally, SOS **125** may provide a secure execution environment to implement authentication procedures to protect platform **101** elements coupled to platform **101** and to potentially establish one or more hierarchical trust layers to access a network. These authentication procedures include, but are not limited to, extensible markup language (XML) signatures and public key infrastructure (PKI) certifications. These two examples of authentication procedures are at least partially described in IETF, Network Working Group, RFC 4210, Internet X.509 Public Key Infrastructure Certificate Management Protocol, published September 2005 ("RFC 4210") and IETF, Network Working Group, RFC 3275, XML-Signature Syntax and Processing, published March 2002 ("RFC 3275").

[**0024**] In FIG. **1**, SOS **125** is depicted as including agent(s) **125**A. Agent(s) **125**A, for example, perform functions to facilitate network access for elements on platform **101** that request access to a network. In one example, agent(s) **125**A include a policy enforcement agent to act as a policy enforcement point on behalf of a network administrator for network **180**. In one example, agent(s) **125**A may also act as an intermediary between platform **101** elements (e.g., COS **115**) and an untrusted network. This may facilitate a safe access from a roaming location to protect these elements from potentially harmful or malicious entities. As described more below (see FIG. **6**), this may also enable platform **101** to establish at least one hierarchical trust layer to access at least one network.

[**0025**] In one example, platform **101** includes network interface **140**. Network interface **140** may include the software, hardware and/or firmware to couple platform **101** to a network via wired or wireless pathways (e.g., a media access controller, wireless transceiver, digital signal processor, antennae, radio, fabric interface, etc.). Network interface **140**, as depicted in FIG. **1**, may also include filters **142**. Filters **142**, in one example, are data traffic filters that are used to control the flow of data traffic to and from platform **101** via communication link **141**. As described in more detail below, filters **142** may be configured by elements on platform **101** to facilitate the enforcement of network administrative policies and to possibly establish one or more hierarchical trust layers to access a network. In other examples, other data traffic filters are allocated to one or more platform **101** partitions and controlled by other elements on platform **101** (e.g., SOS **125**, agent(s) **125**A, manageability engine **150**, etc.).

[**0026**] In one implementation, platform **101** includes manageability engine **150**. As portrayed in FIG. **1**, manageability engine **150** is coupled to SOS **125** via communication link **121** and to network interface **140** via communication link **151**. In one example, as described in more detail below, manageability engine **150** includes logic and memory to establish a secure communication channel (e.g., using XML signatures and/or PKI certifications) with a policy enforcement agent from among agent(s) **125**A. This secure communication channel, for example, is established via communication link **121**. In this example, manageability engine **150** obtains posture information associated with both itself and with an access requester on platform **101** (e.g., COS **115**) and/or other elements resident on or associated with platform **101**. The obtained posture information is then forwarded to the policy enforcement agent via the secure communication channel on communication link **121**. In one example, this posture information, as described below, is subsequently forwarded to policy decision point **182**.

[**0027**] In a broad sense, posture information includes integrity measurements that refer to empirical data collected from the hardware, software, and/or firmware of a platform associated with or allocated to support or implement an access requester (e.g., COS **115**). The integrity measurements may also be associated with a manageability engine (e.g., manageability engine **150**). For example, integrity measurements are obtained directly by manageability engine **150** or with the assistance of elements on platform **101** (e.g., agent(s) **115**A or **125**A). Manageability engine **150**, for example, has direct access to hardware services or resources resident on platform **101** (not shown). These hardware resources may include processing elements, chipset registers, memory, busses, firmware, etc. Manageability engine **150**, for example, can directly or indirectly access these hardware resources to obtain integrity measurements to gather posture information for platform **101**.

[**0028**] In one example, integrity measurements include anti-virus parameters, firewall status, software versions, hardware status, log/trace files, the existence of given software in memory on the platform and the like. In one implementation, gathered posture information is used to determine the presence and/or capabilities of certain agents associated with an access requester and/or a manageability engine. For example, anti-virus software is an agent included among agent(s) **115**A in COS **115**. The integrity measurements for anti-virus parameters, for example, determine the status (e.g., most current version), capabilities and the integrity/authenticity of this agent.

[**0029**] In one implementation, the posture information obtained and forwarded by manageability engine **150** is also forwarded to policy decision point **182** over a secure communication channel that is established via communication link **141**. Policy decision point **182**, for example, indicates what network access to network **180** that the access requester can obtain based on a comparison of the posture information to network administrative policies.

[**0030**] In one example, SOS **125** uses agent(s) **125**A to gather posture information about COS **115** and convey this posture information either directly or indirectly to policy decision point **182**. For example, SOS **125** establishes a secure communication channel and also implements authentication procedures with policy decision point **182** (e.g., cryptographically signing exchanged information). Thus, establishing SOS **125** as a trusted agent that can directly convey the posture information gathered on COS **115** for policy decision point **182** to determine whether to grant COS **115** access to network **180**, to maintain a previously granted access or to maintain a given hierarchical trust layer that was obtained when access was granted. In an indirect example, SOS **125** utilizes manageability engine **150** to be the trusted agent to policy decision point **182**. Thus, the posture information is first forwarded to manageability engine **150** and then is subsequently forwarded to policy decision point **182**.

[**0031**] As mentioned briefly above, in one example, agent(s) **125**A included in SOS **125** may act as intermediaries between platform **101** elements and an untrusted

network. In this example, the platform **101** element is COS **115**. Thus, for example, if platform **101** is in a mobile computing device (e.g., a notebook computer) agent(s) **125**A may allow for a user to gain safe access from a roaming location using COS **115** without the fear of being harmed or hijacked by malicious entities (e.g., worms, viruses, etc.).

[**0032**] FIG. **2** is an illustration of an example system **200** including a virtualization technology enabled platform **201** to couple to network **280**. As depicted in FIG. **2**, system **200** contains similar elements to system **100** portrayed in FIG. **1**. In one implementation, platform **201** is part of a computing device (not shown) that couples to either a LAN or a WLAN (e.g., network **280**) via communication link **241**.

[**0033**] In one example, platform **201** is designed to operate according to a virtualization technology scheme. This scheme, for example, partitions the resources to support a plurality of operating systems. At least a portion of these resources is shown in FIG. **2** as resources **260**. In one example, resources **260**A and **260**B represent those resources that are dedicated to or independently used by partitions **210** and **220**. The virtualization scheme, for example, partitions these resources in such a way that an operating system can operate separately and independently to other operating systems. Although FIG. **2** depicts only two partitions on platform **201**, platform **201** may contain any number of partitions to support a plurality of operation systems.

[**0034**] In one implementation, as depicted in FIG. **2**, platform **201** includes interfaces **205**A-D to assist in implementing the virtualization scheme. For example, interface **205**A is an interface that initializes processing elements and memory resources for virtualization operations (e.g., central processing unit, memory controller, memory, etc.). Interface **205**B, for example, initializes or prepares basic input/output systems (BIOS) for virtualization operations. Interface **205**C may be an interface to initialize firmware on platform **201** (e.g., an extensible firmware interface (EFI) or a universal extensible firmware interface (UEFI). Interface **205**D may be an interface that can be used for isolation and recovery (e.g., client isolation and recovery technology (CIRT)) should platform **201** need to be remotely managed without involving operating systems on platform **201**. Interface **205**D may also enable one or more operating systems (e.g., COS **215**) to use virtual drivers, as discussed below.

[**0035**] In one example, partition **210** includes COS **215**. Similar to COS **115** described above, COS **215**, in one example, is a capability operating system. In this example, COS **215** represents those elements that respond to a user's request to process data or carry out a user initiated function for a computing device (not shown). COS **215**, in one example, includes agent(s) **215**A. These agents, for example, perform certain functions to facilitate an access request for COS **215** to network **280**. In one example, agent(s) **215**A gather posture information about COS **215** and other elements that are controlled by COS **215**. Agent(s) **215**A, for example, also facilitate secure communications from COS **215**. This may include the initiation of an access request to network **280** and carrying out any processes to authenticate itself to network **280** or to policy enforcement/decision points for access to network **280**.

[**0036**] In one implementation, partition **210** couples to virtual drivers **212**A-B. In this implementation, these drivers are deemed as "virtual" because they may appear to COS **215** as the actual drivers but are actually memory slots partitioned to COS **215**. As a result, other elements (e.g., SOS **225**) on or coupled to platform **201** may couple to the actual drivers and thus may forward commands placed into the partitioned memory slots to these actual drivers. The virtual drivers may be accessed, for example, via interface **205**D. Virtual driver **212**A, for example, is used by COS **215** to access or communicate with a wireless network interface (e.g., a WLAN network interface card (NIC)). Virtual driver **212**B, for example, is used by COS **215** to access a wired network interface (e.g., a LAN NIC). For example, these wired and/or wireless NICs are included in network interface **240**.

[**0037**] In one example, partition **220** includes SOS **225**. SOS **225**, as shown in FIG. **2**, includes agent(s) **225**A. Agent(s) **225**A, in one example, include a policy enforcement agent that enables SOS **225** to act as a policy enforcement point on behalf of a network administrator for network **280**.

[**0038**] In one implementation, agent(s) **225**A access or control drivers **222**A-E that are coupled to partition **220**. Driver **222**A, for example, is to allow agent(s) **225**A to access a wired network interface in network interface **240** and driver **222**B allows access to a wireless interface in network interface **240** (both not shown). Driver **222**D, for example, is accessed by agent(s) **225**A to communicate with manageability engine **150**.

[**0039**] In one example, driver **222**C is a driver for a policy enforcement agent from among agent(s) **225** to enforce network administrative policies. The policy enforcement agent may enforce the network administrative polices through use of one or more circuit breaker filters (not shown). These circuit breaker filters may be located within filters **242** in network interface **240** and/or located within partitions on platform **201**. In that sense, the circuit breaker filters may be based in hardware, firmware, software or a combination of hardware, software or firmware that is resident on platform **201**. These circuit breaker filters, for example, will filter the flow of data traffic to or from platform **201**. Thus, the policy enforcement agent may use driver **222**C to configure these circuit breaker filters such that data traffic is blocked (e.g., circuit broken) if certain criterion associated with the network administrative polices are not met. This criterion, for example, is based on posture information obtained by manageability engine **150**, the indication of what network access is granted by a policy decision point for a network, or a method of accessing or coupling to the network, e.g., through another network.

[**0040**] In one implementation, SOS **225** maintains or has access to any number of NAC communication protocols to establish or maintain a secure communication channel. These NAC communication protocols, for example, are portrayed in FIG. **2** as NAC protocol stack **262**. In one example, NAC protocol stack **262** may be maintained or stored in a memory (not shown) included in resources **260** that is accessible to SOS **225**. These NAC communication protocols include various security related protocols described, for example, in industry standards or initiatives. These industry standards or initiatives include, but are not limited to, IEEE 802.1AE/af for IEEE 802.1X protocols, RFC 3748 for EAP protocols, RFC 2401 for IPsec protocols,

RFC 2246 for TLS protocols and IEEE 802.11i for wireless LAN protocols. In one example, driver **222**E may be a bridge driver via which agent(s) **225**A access NAC protocol stack **262** to establish a secure communication channel.

[**0041**] In one example, a policy enforcement agent included in agent(s) **225**A establishes a secure communication channel with policy decision point **282** via communication link **241**. Thus, in this example, the policy enforcement agent accesses NAC protocol stack **262** via driver **222**E to establish this secure communication channel. In one implementation, this secure communication channel is also used to forward posture information associated with an access requester (e.g., COS **215**).

[**0042**] As depicted in FIG. **2**, platform **201** includes manageability engine **150** coupled to SOS **225** via communication link **221**. In one example, as described above, manageability engine **150** includes logic and memory to establish a secure communication channel (e.g., using XML signatures and/or PKI certifications) via communication link **221**. This secure communication channel may be established with a policy enforcement agent from among agent(s) **225**A. In this example, manageability engine **150** obtains posture information associated with both itself and with an access requester (e.g., COS **215**) on platform **201** and/or other elements resident on or associated with platform **201**. The obtained posture information is then forwarded to the policy enforcement agent on the secure communication channel via communication link **221**.

[**0043**] In one implementation, the posture information obtained and forwarded by manageability engine **150** and/or agent(s) **225** is also forwarded to policy decision point **282** over a secure communication channel that is established via communication link **241**. In one example, policy decision point **282** indicates what network access to network **280** that the access requester can obtain based on a comparison of the posture information to network administrative policies. As described above for FIG. **1**, this process of posture gathering, reporting and interpretation may be carried out by various features in manageability engine **150** and/or a policy enforcement agent from among agent(s) **225**A.

[**0044**] In one implementation, as shown in FIG. **2**, communication link **243** couples manageability engine **150** to network interface **240**. Communication link **243**, for example, is an exclusive communication link accessible only to manageability engine **150** to enforce default network administrative polices for platform **201**. For example, as part of the start-up or power-up of platform **201**, manageability engine **150** uses communication link **243** to configure filters **242** in network interface **240**. Filters **242** may be configured such that only control data traffic can flow from elements on platform **201** via communication link **241**. This control data traffic, for example, includes the data traffic between SOS **225** and a policy decision point for a network. This control data traffic may establish a secure communication channel to obtain access to that network. As a result, in this implementation, all data traffic flowing from platform **201** that does not relate to establishing a secure communication channel is blocked until the secure communication channel is established. This blocking, for example, establishes a first hierarchical trust layer to access network **280**.

[**0045**] In one implementation, rather than or in addition to implementing default network administrative policies, manageability engine **150** gathers posture information and routes that information through SOS **225** and over communication link **241** to a policy decision point for a network. This information may be encrypted or signed with a PKI private key for manageability engine **150**. Based at least in part on the PKI private key signature, the policy decision point trusts that manageability engine **150** is the sender of the posture information. The policy decision point may then forward information signed with a PKI key for the policy decision point back to manageability engine **150** over communication link **241** and through SOS **225**. This information, when decrypted, may indicate what access is initially granted in order for SOS **225** to establish a secure communication channel and obtain greater access to the network. In one example, enforcement of policies by SOS **225** to ensure platform **201** elements don't exceed the access granted, establishes a second hierarchical trust layer to access network **280**.

[**0046**] In one example, as part of start-up procedures, manageability engine **150** gathers posture information associated with SOS **225** before an image of SOS **225** is activated on platform **201** (e.g., partitioned resources are allocated). Manageability engine **150** may compare this posture information to default network administrative polices to ensure that SOS **225** has the proper credentials to serve as a service operating system for platform **201**. This may prevent a rogue agent from corrupting SOS **225** and acting as a trusted agent to platform **201**. These default network administrative polices may include authentication and integrity requirements for SOS **225**. For example, a PKI authentication scheme is used to authenticate SOS **225** to manageability engine **150**. An integrity scheme may be used that includes, but is not limited to, a challenge-response exchange between manageability engine **150** and SOS **225**. This authentication/integrity scheme, for example, establishes at least a first hierarchical trust layer to access network **280**.

[**0047**] Manageability engine **150**, in one example, based on SOS **225** not meeting the default network administrative policies, initiates remediation procedures. For example, manageability engine **150** establishes a secure communication channel with policy decision point **282** on network **280** (e.g., via communication links **243** and **241**). Since this secure communication channel has no data traffic from entities on platform **201** other than manageability engine **150**, the secure communication channel, in one example, is an out-of-band network connection. In this example, manageability engine **150** requests information on obtaining a new image for SOS **225** or downloading a patch from a server coupled to network **280** via this out-of-band network connection. In one example, manageability engine **150** includes (e.g., stored in a memory on or accessible to manageability engine **150**), a NAC protocol stack to facilitate establishing and maintaining this out-of-band network connection until SOS **225** is updated or patched.

[**0048**] In another example, based on SOS **225** not meeting the default network administrative policies or SOS **225**'s image is improperly activated, manageability engine **150** limits or restricts the access that an access requester on platform **201** may obtain to network **280**. In this example, since COS **215** does not utilize SOS **225** to request and gain access to network **280**, access is restricted or limited by manageability engine **150** (e.g., via filters **242**). This restric-

tion may stay in effect until remediation procedures are taken to properly activate SOS **225** and/or bring it into compliance with the default network administrative policies.

[**0049**] FIG. **3** is a block diagram of an example architecture for manageability engine **150**. In FIG. **3**, manageability engine **150** includes security logic **310**, control logic **320**, memory **330**, input/output (I/O) interfaces **340** and optionally one or more applications **350**, each coupled as depicted.

[**0050**] In one example, the elements portrayed in FIG. **3**'s block diagram are those elements to support or enable a manageability engine **150** as described in this disclosure. For example, security logic **310** and control logic **320** each or collectively represent any of a wide variety of logic device(s) or executable content to implement the features of manageability engine **150**. These logic device(s) may include a microprocessor, network processor, service processor, microcontroller, field programmable gate array (FPGA), application specific integrated circuit (ASIC), sequestered thread or core of a multi-core/multi-threaded microprocessor, special operating mode of a processor (e.g., system management mode) or combination thereof.

[**0051**] In FIG. **3**, security logic **310** includes posture feature **312**, policy feature **314**, communicate feature **316** and cryptographic feature **318**. In one implementation, security logic **310** uses these features to perform several functions. These functions include, for example, obtaining posture information, enforcing default network administrative polices, establishing a secure communication channel with a policy enforcement agent, cryptographically signing the posture information and forwarding that information to the policy enforcement agent. These functions may also include verifying the integrity and authenticity of an indication by a policy decision point (e.g., policy decision point **282**) of what network access (e.g., to network **280**) the access requester can obtain based on the forwarded posture information. In another implementation, these features may be used to take remediation actions should default or other network administrative polices fail to grant the access desired or needed by the access requester.

[**0052**] Control logic **320** may control the overall operation of manageability engine **150** and as mentioned above, may represent any of a wide variety of logic device(s) or executable content to implement the control of manageability engine **150**. In alternate examples, the features and functionality of control logic **320** are implemented within security logic **310**.

[**0053**] According to one example, at least a portion of memory **330** is memory that is exclusively accessible to security logic **310** or control logic **320** to temporarily store information. For example, a secret key to be used to cryptographically sign posture information or information related to a secure connection between manageability engine **150** and a policy enforcement agent (e.g., from among agent(s) **225**A), information to generate XML signatures, or information regarding default network administrative polices. A NAC communication protocol stack may also be stored in at least a portion of memory **330** to assist in establishing and maintaining a secure communication channel via an out-of-band communication link. Memory **330** may also store executable content. The executable content may be used by control logic **320** and/or security logic **310** to implement or activate features or elements of manageability engine **150**.

[**0054**] I/O interfaces **340** may provide an interface via a communication medium or link between manageability engine **150** and elements resident on a platform (e.g., platform **201**) or located remotely to the node (e.g., a policy decision point such as policy decision point **282**). As a result, I/O interfaces **340** may enable security logic **310** or control logic **320** to receive a series of instructions from these elements. The series of instructions may enable security logic **310** and/or control logic **320** to implement one or more features of manageability engine **150**. This may include enforcing default network administrative policies.

[**0055**] In one example, manageability engine **150** includes one or more applications **350** to provide internal instructions to control logic **320** and/or security logic **310**.

[**0056**] FIG. **4** is a flow chart of an example method to obtain network access. In one example, system **200** depicted in FIG. **2** is used to describe this method. In block **410**, for example, a platform such as platform **201** is powered-on or powered-up. This power-up may occur as power is initially provided to platform **201**, or incident to a reset of the platform.

[**0057**] In block **420**, in one example, upon power-up of platform **201**, security logic **310** in manageability engine **150** activates policy feature **314**. Policy feature **314**, in one example, obtains default network administrative policies (e.g., from memory **330**). In this example, based on those default network administrative policies, policy feature **314** configures filters **242** in network interface **240**. As mentioned above, this may allow only control data traffic to flow from elements on platform **201** and may also establish a first hierarchical trust layer to access network **280**.

[**0058**] In one implementation, security logic **310** also activates posture feature **312** to obtain posture information associated with SOS **225**. As mentioned above, this posture information may be obtained before the image of SOS **225** is activated on platform **201**. In one example, policy feature **314** compares the posture information to the default network administrative polices and determines whether any remediation actions are needed to ensure that SOS **225** can act as a trusted agent for platform **201**. This may also further establish the first hierarchical trust layer.

[**0059**] In one example, remediation actions include security logic **310** activating communicate feature **316** to establish and maintain a secure communication channel via an out-of-band communication link with policy decision point **282**. In addition, security logic **310**, for example, activates cryptographic feature **318** to provide an added level of security for the information exchanged. One example of this added level of security is described below for block **460**.

[**0060**] In block **430**, in one example, a network access request is initiated from an access requester on platform **201**. As mentioned above, in one example, the access requester may be any element on platform **201** to include hardware, software, firmware or a combination of these elements. For example, the access requester is COS **215**. The access request, in one example, is made to policy decision point **282**.

[**0061**] In block **440**, in one example, the access request is facilitated by SOS **225** on platform **201**. In one implementation, all network communications from certain platform **201** elements, such as COS **215**, pass through SOS **225**. In

this regard, SOS **225** serves as the policy enforcement point for network administrative policies for these network communications. In one example, SOS **225** activates a policy enforcement agent from among agent(s) **225**A to implement policy enforcement activities.

[**0062**] In one implementation, the policy enforcement agent from among agent(s) **225**A establishes a secure communication channel over communication link **241** with policy decision point **282**. Communication link **241** may include wired, wireless or a combination of wired or wireless pathways. For example, the portion of communication link between SOS **225** and network interface **240** is a wired pathway routed on platform **201** and the portion between network interface **240** and policy decision point **282** is a wireless pathway. In this implementation, the secure communication channel is established and then maintained by the policy enforcement agent in accordance with one or more wireless and/or wired NAC communication protocols included in, for example, NAC protocol stack **262**.

[**0063**] In block **450**, in one example, the policy enforcement agent from among agent(s) **225**A is also establishes a secure communication channel over another communication link. This other communication link, for example, is communication link **221**. Although communication link **221** is depicted in FIG. **2** as coupling to driver **222**D, the policy enforcement agent, in one example, controls driver **222**D that couples to communication link **221**. Thus, since communication link **221** couples to driver **222**D, the policy enforcement agent couples to communication link **221**. Similar to the secure connection between SOS **225** and policy decision point **282**, the secure communication channel between manageability engine **150** and the policy enforcement agent is established and then maintained using XML signatures and/or PKI certifications. In one implementation, communicate feature **316** of security logic **310** establishes the secure communication channel with the policy enforcement agent from among agent(s) **225**A.

[**0064**] In block **460**, in one example, posture feature **312** obtains posture information associated with the access requester, COS **215**, and with manageability engine **150**. This posture information may be converted to attribute-value pairs (AVPs) or type-length values (TLVs) to facilitate the forwarding of the posture information to the policy enforcement agent.

[**0065**] In one implementation, cryptographic feature **318** in security logic **310** provides an additional level of security. In this implementation, cryptographic feature **318** obtains a secret key (e.g., from memory **330**) and cryptographically signs the posture information with that secret key using PKI or another type of encryption scheme. As yet another security measure, cryptographic feature **318** may also include a monatomic transaction ID or nonce to prove liveliness (e.g., time-sensitive) and ensure that an intermediary rogue device cannot capture and replay the posture information. The nonce, for example, may include a time-sensitive, randomly generated number that is appended to the posture information. The cryptographically signed posture information, including the nonce, is then forwarded to the policy enforcement agent. The policy enforcement agent from among agent(s) **225**A, in one example, then forwards the cryptographically signed posture information to policy decision point **282**.

[**0066**] In block **470**, in one example, policy decision point **282** indicates what access COS **215** can have to network **280**. For example, policy decision point **282** first evaluates the integrity and authenticity of the posture information and then compares the posture information to network administrative policies to determine what network access to allow.

[**0067**] In one implementation, this indication is cryptographically signed and includes the nonce added by cryptographic feature **318**. This indication may be cryptographically signed, for example, so it can only be interpreted by cryptographic feature **318** (e.g., via use of a PKI or other type of encryption scheme). In this regard, once the indication is received from policy decision point **282**, the policy enforcement agent forwards the indication to manageability engine **150**.

[**0068**] In one example, once manageability engine **150** receives the indication, cryptographic feature **318** verifies the integrity and authenticity of the indication. To determine integrity, this includes a comparison of the nonce included in the indication to the nonce that was included in the posture information that was previously forwarded. To determine authenticity, this includes the use of authentication procedures such as PKI certification or an XML signature. In one implementation, if the indication has integrity and is authenticate, the indication is decoded by cryptographic feature **318** and manageability engine **150** forwards the decoded indication to the policy enforcement agent over the secure communication channel via communication link **221**. The policy enforcement agent, for example, then interprets whether the decoded indication forwarded from manageability engine **150** grants the access requested by the access requester, COS **215**.

[**0069**] In one example, if cryptographic feature **318** finds that the indication is not authentic (e.g., fails PKI certification or invalid XML signature) or lacks integrity (e.g., the nonce does not match the nonce initially appended and/or lacks liveliness), the cryptographically signed posture information is forwarded again (e.g., following actions taken at block **460**) with a new nonce included. Forwarding again with a new nonce, for example, may thwart spoofing attempts by a rogue computing device that is acting as a policy decision point.

[**0070**] In block **480**, in one example, network access was granted to COS **215**. In this case, the level of network access can be controlled by the policy enforcement agent from among agent(s) **225**A through the configuration of filters **242** in network interface **240** or other data traffic filters within platform partitions. Since this indication reflects network administrative policies, the policy enforcement agent, in this example, is enforcing network administrative policies when it interprets the indication and configures the data traffic filters on platform **201** based on that interpretation. Thus, for example, a second hierarchical trust layer is established to access network **280**.

[**0071**] In block **490**, in one example, network access was not granted. In this case, agent(s) **225**A in SOS **225** may determine what actions are required to obtain the desired access. In one implementation, the indication also includes information on how to take those actions. For example, updating anti-virus software or downloading patches from specified internal or external servers that are coupled to network **280** or implementing an access control policy

including access control lists (ACLs) that may result in reconfiguring the data traffic filters on platform **201** (e.g., filters **242**).

[**0072**] In one example, agent(s) **225**A complete the remediation actions described in the indication by policy decision point **282**. These remediation actions, for example, include but are not limited to, updating anti-virus software, downloading a patch from a server and downloading or installing given software. Remediation actions may also include configuring data traffic filters **242** on communication link **241** to implement an access control policy to enforce the access control policy. Based on completion of one or more remediation actions, the posture enforcement agent from among agent(s) **225**A may request that manageability engine **150** obtain updated posture information that reflects the remediation actions taken. In this case, the process returns to block **460**.

[**0073**] In one implementation, a secure communication channel is established between policy decision point **282** and SOS **225**, and another secure communication channel is also established between the policy enforcement agent and manageability engine **150**. Thus, in this implementation, for subsequent access requests by access requesters on platform **201**, the process returns to block **460**.

[**0074**] FIG. **5** is an illustration of an example system **500** including platform **101** obtaining access to multiple networks. As shown in FIG. **5**, system **500** includes platform **101** coupling to network **180** through policy decision point **182**. System **500** also is shown in FIG. **5** as including networks **520** and **530** each having policy decision points **522** and **532**, respectively.

[**0075**] In one implementation, platform **101** includes the same elements as described for FIG. **1** and initiates and gains access to network **180** via policy decision point **182** as described for FIG. **1**. As part of that access process, platform **101** attempts to establish a secure communication channel over communication link **141**. This may include, as mentioned above, the enforcement of default administrative polices by manageability engine **150**. One such policy may include a requirement that SOS **125** is authenticated and/or properly activated on platform **101** before any access is allowed. Thus, for example, network access requests made by COS **115** will be blocked by manageability engine **150** if SOS **125** is not authenticated and/or properly activated.

[**0076**] In this implementation, based on SOS **125** being authenticated and properly activated, and the posture information meeting administrative policies for network **180**, an access requester on platform **101** is granted access to network **180** by policy decision point **182**. The access requester then seeks access to other networks such as networks **520** or **530**. Initiating this other access, for example, includes establishing secure communication channels over communication links **521** or **531** to policy decision points **532** or **534**, respectively. The access to each network, for example, is obtained as described for FIGS. **1-4**.

[**0077**] FIG. **6** is a flow chart of an example method to establish multiple layers of hierarchical trust to obtain network access. In one example, system **500** depicted in FIG. **5** is used to describe this method. In this method, platform **101** is within a computing device, e.g., a notebook computer. A user of this notebook computer may be a person employed by a corporation with possible access privileges to a corporate network (e.g., a second network—network **530**). In this example, the user is traveling and uses the notebook computer to gain access to a hotel LAN (e.g., a first network—network **180**) that couples to the Internet. The user, for example is to use that access to the hotel LAN, network **180**, to gain access to the corporate network, network **530**.

[**0078**] As depicted in the example flow chart in FIG. **6**, three layers of hierarchical trust are established before access is obtained to network **530**, trust layers **610**, **620** and **630**. For trust layer **610**, for example, block manageability engine **150** enforces a policy (e.g., from among default network administrative policies) that allows access to a network by an access requester is (e.g., COS **115**) only if a service operation system (e.g., SOS **125**) is up and running and/or properly activated on platform **101**. In block **612**, for example, manageability engine **150** monitors platform **101** and in block **614** determines whether the policy of SOS **125**'s activation is met based on the monitoring. For example, in block **616**, if the policy is met, a first hierarchical trust layer is established and the access requester gains access to network **180**.

[**0079**] For trust layer **620**, SOS **125** enforces one or more policies, e.g., from among default network administrative policies. These policies, for example, are based on network **530** requiring that any platform that couples to network **530** through another network enforces these policies prior to seeking access through the other network. For example, SOS **125** enforces these policies by providing protocol filtering (e.g., via filters **142**) and/or proxy services to ensure that malicious content is blocked from getting to COS **115** as it seeks access to network **530** through network **180**. These policies, for example, may also include but are not limited to an access control list policy, an outbreak containment policy, an intrusion detection policy or other types of monitoring policies that are in addition to proxy monitoring.

[**0080**] At block **622**, for example, SOS **125** monitors communications between PDP **182** for network **180** and COS **115**. To enforce the polices and to protect COS **115**, for example, SOS **125** may monitor data traffic by serving as an HTTP(s) proxy for the network connection between COS **115** and the hotel's network, network **180**. SOS **125** may also serve as an HTTP(s) client to policy decision point **182** or other network **180** elements.

[**0081**] At block **624**, for example, as a proxy to both COS **115** and network **180** elements, SOS **125** may examine and filter/stop any malicious data traffic destined for COS **115**. SOS **125** may also examine and filter/stop data traffic coming from COS **115**. Since SOS **125** causes any communications passing to/from COS **115** to pass through the filtering and also acts as a proxy, in one example, the policy of protecting COS **115** is met. Thus at block **626**, for example, a second hierarchical trust layer is established and COS **115** may continue to seek access to network **530** through network **180**.

[**0082**] For trust layer **630**, in one example, access to network **530** may be obtained as described for FIGS. **1-4**. At block **632**, for example, posture information is gathered and provided to PDP **532** for network **530**. As depicted in FIG. **6**, this posture information may be provided by manageability engine **150** and/or SOS **125**. The information, for

example, may be cryptographically signed by manageability engine **150** or cryptographically signed by both manageability engine **150** and SOS **125**.

[**0083**] At block **634**, for example, PDP **532** compares the posture information to network **530**'s administrative policies and sends an indication back to manageability engine **150** and/or SOS **125** as to what access is granted. Also as mentioned above for FIGS. **1-4**, for example, this indication may include the configuration/reconfiguration of filters or recommended remediation actions. For example, SOS **125** configures filters **142** based on the indication to enforce network **530**'s administrative policies.

[**0084**] At block **636**, for example, a third hierarchical trust layer is established based on SOS **125** or manageability engine **150**'s configuration of filters **142** that enforces network **530**'s administrative policies or taking remedial actions that bring COS **115** and/or other platform **101** elements into compliance with the policies. In one example, COS **115** has gained sufficient access to network **530** to establish a VPN connection to a server on network **530** (e.g., shared drives or corporate databases). In one example, once the VPN connection is established, the actions SOS **125** and/or manageability engine **150** took to obtain the first and second hierarchical trust layers are no longer required or are reduced. For example, SOS **125** will no longer act as a is proxy and/or filter communication to/from COS **115** as long as the VPN connection is maintained.

[**0085**] In one example, SOS **125** and/or manageability engine **125** may periodically gather posture information for COS **115** or platform **101** and forward that posture information to policy decision point **532** to maintain the third hierarchical trust level. As a result, policy decision point **532** may receive information regarding the status of COS **115** and restrict access should that status violate network administrative polices. This restricted access, for example, may include a requirement to use manageability engine **150** to authenticate SOS **125** again and/or take remediation actions to regain or reestablish one or more of the hierarchical trust levels.

[**0086**] Referring again to memory **330** in FIG. **3**. Memory **330** may include a wide variety of memory media including but not limited to volatile memory, non-volatile memory, flash, programmable variables or states, random access memory (RAM), read-only memory (ROM), flash, or other static or dynamic storage media.

[**0087**] In one example, machine-readable instructions can be provided to memory **330** from a form of machine-accessible medium. A machine-accessible medium may represent any mechanism that provides (i.e., stores and/or transmits) information or content in a form readable by a machine (e.g., an ASIC, special function controller or processor, FPGA, manageability engine or other hardware device). For example, a machine-accessible medium may include: ROM; RAM; magnetic disk storage media; optical storage media; flash memory devices; electrical, optical, acoustical or other form of propagated signals (e.g., carrier waves, infrared signals, digital signals); and the like.

[**0088**] References made in the specification to the term "responsive to" are not limited to responsiveness to only a particular feature and/or structure. A feature may also be "responsive to" another feature and/or structure and also be located within that feature and/or structure. Additionally, the term "responsive to" may also be synonymous with other terms such as "communicatively coupled to" or "operatively coupled to," although the term is not limited in this regard.

[**0089**] In the previous descriptions, for the purpose of explanation, numerous specific details were set forth in order to provide an understanding of this disclosure. It will be apparent that the disclosure can be practiced without these specific details. In other instances, structures and devices were shown in block diagram form in order to avoid obscuring the disclosure.

What is claimed is:

**1**. A method comprising:

initiating a network access request from an access requester on a platform that couples to a network, the network access request made to a policy decision point for the network;

establishing a secure communication channel over a communication link between the policy decision point and a policy enforcement point on the platform;

establishing a secure communication channel over an other communication link, the other communication link between at least the policy enforcement point and a manageability engine resident on the platform, the manageability engine to forward posture information associated with the access requester and the manageability engine, the posture information to be forwarded via the secure communication channel between the manageability engine and the policy enforcement point; and

forwarding the posture information to the policy decision point via the secure communication channel between the policy enforcement point and the policy decision point, the policy decision point to indicate what access the access requester can obtain to the network based on a comparison of the posture information to one or more network administrative policies.

**2**. A method according to claim 1, further comprising:

configuring a data traffic filter on a communication link that couples the platform to the network, the data traffic filter configured by the manageability engine based on a default network administrative policy, configuring the data traffic filter to occur prior to forwarding the posture information to the policy decision point, wherein configuring the data traffic filter establishes a first hierarchical trust layer to access the network.

**3**. A method according to claim 2, wherein the default network administrative policy includes configuring the data traffic filter to allow only control data traffic to establish a secure communication channel on the communication link.

**4**. A method according to claim 2 further comprising:

reconfiguring the data traffic filter based at least in part on what access was indicated by the policy decision point, wherein reconfiguring the data traffic filter establishes a second hierarchical trust layer to access the network.

**5**. A method according to claim 2 further comprising:

receiving the indication of what access the access requester can obtain to the network; and

implementing a remediation action based on the indication not granting the level of network access the access requester is seeking, wherein implementing the remediation action establishes a second hierarchical trust layer to access the network.

**6**. A method according to claim 5, wherein the remediation action is to include at least one remediation action selected from the following group of: updating anti-virus software, downloading a patch from a server, installing given software and implementing an access control policy by configuring the data traffic filter on the communication link that couples the platform to the network.

**7**. A method according to claim 1, wherein the access requester comprises a capability operation system and the policy enforcement point is part of a service operation system, the capability operation system and the service operation system to operate on different partitions on the platform, each partition to use platform resources independently.

**8**. A method according to claim 1, wherein the posture information associated with the access requester is based on integrity measurements of the access requester, the integrity measurements to include at least one integrity measurement selected from the following group of: an anti-virus parameter, a firewall status, a software version, a hardware status, a log file and an existence of given software in a memory on the platform.

**9**. A method according to claim 1, wherein the one or more network administrative policies include at least one policy selected from the following group of: an access control list policy, an outbreak containment policy, an intrusion detection policy and a monitoring policy.

**10**. A method according to claim 1, wherein establishing the secure communication channel between the policy decision point and the policy enforcement point includes establishing the secure communication channel using IEEE 802.1X communication protocols.

**11**. A method according to claim 1, wherein establishing the secure communication channel between the policy enforcement point and the manageability engine includes establishing the secure communication channel using extensible markup language (XML) signatures.

**12**. A method comprising:

initiating a network access request to a first network from an access requester on a platform that couples to the first network, the network access request made to a policy decision point for the first network, the platform including a plurality of partitions, each partition to use at least a portion of platform resources that are independent of platform resources used by another partition, the plurality of partitions including a partition that supports a capability operating system and including a partition that supports a service operating system, the capability operating system including the access requester, the service operating system including a policy enforcement agent;

determining whether the service operating system is activated on the platform, the determination made by a manageability engine resident on the platform; and

permitting the access requester to seek the requested access to the first network based on the manageability engine's determination, wherein permitting the access requester to seek the requested access establishes a first layer of hierarchical trust to access a second network.

**13**. A method according to claim 12 further comprising:

obtaining the access indicated for the access requester to the first network;

seeking access to the second network through the first network, the access sought by the access requester,

monitoring data traffic between the capability operating system and the first network, the data traffic monitored by the service operating system;

determining whether the data traffic meets one or more default network administrative policies for the second network, the determination made by the service operating system; and

permitting the access requester to initiate the requested access to the second network based on the system operating system's determination, wherein permitting the access requester to initiate the requested access to the second network establishes a second hierarchical trust layer to access the second network.

**14**. A method according to claim 13, wherein the one or more default network administrative policies include at least one policy selected from the following group of: an access control list policy, an outbreak containment policy, an intrusion detection policy and a monitoring policy.

**15**. A method according to claim 13, further comprising:

the access requester initiating the other network access request to the second network through the first network, the other network access request made to a policy decision point for the second network;

establishing a secure communication channel over a communication link between the policy decision point for the second network and the service operating system;

establishing a secure communication channel over another communication link, the other communication link between the service operating system and the manageability engine, the manageability engine to forward posture information associated with the access requester and the manageability engine, the posture information to be forwarded via the secure communication channel between the manageability engine and the service operating system;

forwarding the posture information to the policy decision point for the second network via the secure communication channel between the service operating system and the policy decision point for the second network, the policy decision point for the second network to indicate what access the access requester can obtain to the second network based on a comparison of the posture information to one or more network administrative policies; and

receiving the indication of what access the access requester can obtain to the second network, the system operating system's policy enforcement agent to enforce the level of access based on the indication, wherein enforcing the level of access establishes a third hierarchical trust layer to access the second network.

**16**. A method according to claim 15, further comprising:

obtaining the access indicated for the access requester to the second network;

gathering posture information associated with the capability operating system, the posture information associated with the capability operating system gathered by the service operating system;

forwarding the gathered posture information to the policy decision point for the second network, wherein the policy decision point for the second network indicates what access the access requester can maintain to the second network based on a comparison of the gathered posture information to the one or more network administrative policies; and

receiving the indication of what access the access requester can maintain to the second network, the system operating system's policy enforcement agent to enforce the level of access based on the indication, wherein enforcing the level of access maintains the third hierarchical trust layer to access the second network.

**17**. An apparatus resident on a platform to couple to a network, the apparatus comprising:

a manageability engine that includes memory and logic, the logic to:

establish a secure communication channel via a communication link on the platform, the secure communication channel establish with a policy enforcement agent on the platform;

obtain posture information associated with the manageability engine and an access requester on the platform, the access requester to seek access to the network;

cryptographically sign the posture information with a secret key maintained in the memory; and

forward the cryptographically signed posture information to the policy enforcement agent via the secure communication channel, the cryptographically signed posture information to be forwarded to a policy decision point for the network via another secure communication channel established between the policy enforcement agent and the policy decision point, wherein the policy decision point is to indicate what access the access requester can obtain to the network based on a comparison of the posture information to a network administrative policy.

**18**. An apparatus according to claim 17, the logic to further comprise logic to:

configure a data traffic filter on a communication link that couples the platform to the network, the data traffic filter configured by the logic based on a default network administrative policy that allows only control data traffic to pass through the data traffic filter, the control data traffic to include authentication information, wherein to establish a first hierarchical trust layer to access the network, the logic is to configure the data traffic filter prior to forwarding the cryptographically signed posture information to the policy decision point.

**19**. An apparatus according to claim 18, the indication of what access the access requester can obtain to the network is cryptographically signed by the policy decision point, the cryptographically signed indication to be decoded by the manageability engine's logic to determine what access the access requester can obtain to the network, wherein to establish a second hierarchical trust level to access the network, the policy enforcement agent on the platform is to enforce the level of access determined to be obtainable.

**20**. An apparatus according to claim 19, wherein the posture information and the indication are cryptographically signed using a public key infrastructure (PKI) encryption scheme.

**21**. An apparatus according to claim 17, the logic to cryptographically sign the posture information comprises the logic to include a nonce with the posture information, the nonce to include a time-sensitive, randomly generated number, the logic to cryptographically sign both the posture information and the nonce, wherein the indication of what access the access requester can obtain to the network is cryptographically signed by the policy decision point, the cryptographically signed indication to also include the nonce, the cryptographically signed indication to be decoded by the manageability engine's logic, the logic to authenticate that the indication is associated with the cryptographically signed posture information based on the nonce included with the indication matching the nonce included with the posture information.

**22**. An apparatus according to claim 17, wherein the posture information associated with the access requester and the manageability engine is based on integrity measurements of the access requester and the manageability engine, the integrity measurements to include at least one integrity measurement selected from the following group of: an anti-virus parameter, a firewall status, a software version, a hardware status, a log file and an existence of given software in a memory on the platform.

**23**. An apparatus according to claim 17, wherein the secure communication channel established with the policy enforcement point is established using extensible markup language (XML) signatures.

**24**. A platform to couple to a network comprising:

platform resources to include memory and one or more processing elements;

a plurality of partitions, each partition to use at least a portion of platform resources that are independent of platform resources used by another partition, the plurality of partitions to include a partition that supports a capability operating system and a partition that supports a service operating system, the capability operation system to request access to the network, the service operating system to include a policy enforcement agent to enforce one or more network administrative policies; and

a manageability engine that includes logic and memory that is exclusively accessible to the logic, the logic to:

obtain posture information associated with the capability operating system;

cryptographically sign the posture information with a secret key maintained in the memory that is exclusively accessible to the logic;

forward the cryptographically signed posture information to a policy decision point for the network, wherein the policy decision point is to indicate what access the capability operating system can obtain to the network based on a comparison of the posture information to network administrative policies.

**25**. A platform according to claim 24, the manageability engine's logic to further comprise logic to:

configure a data traffic filter on a communication link that couples the platform to the network, the data traffic filter configured by the logic based on a default network administrative policy that allows only control data traffic to pass through the data traffic filter, the control data traffic to include authentication information, wherein to establish a first hierarchical trust layer to access the network, the logic is to configure the data traffic filter prior to forwarding the cryptographically signed posture information to the policy decision point.

**26**. A platform according to claim 25, the decoded indication to be used by the service operating system's policy enforcement agent to enforce the one or more network administrative policies and determine what access the capability operating system can obtain to the network, the service operating system to implement a remediation action based on the capability operating system not obtaining a desired level of access to the network, wherein to establish a second hierarchical trust layer to access the network includes the enforcement of one or more network administrative policies and the implementation of the remediation action.

**27**. A platform according to claim 26, wherein the remediation action is to include at least one remediation action selected from the following group of: updating anti-virus software used by the capability operating system, downloading a patch for the capability operating system from a server, installing given software and implementing an access control policy by configuring a data traffic filter on a communication link that couples the platform to the network.

**28**. A platform according to claim 24, wherein the posture information and the indication are cryptographically signed using a public key infrastructure (PKI) encryption scheme.

**29**. A platform according to claim 24, wherein the posture information associated with the capability operating system and the manageability engine is based on integrity measurements of the capability operating system, the integrity measurements to include at least one integrity measurement selected from the following group of: an anti-virus parameter, a firewall status, a software version, a hardware status, a log file and an existence of given software in a memory on the platform.

**30**. A platform according to claim 24, wherein the manageability engine's memory and logic are physically separate from the platform resources used by the plurality of partitions.

**31**. A platform according to claim 24, the memory that is exclusively accessible to the manageability engine's logic includes default network administrative polices, the default network administrative polices to include a policy to restrict access to the capability operating system if the service operating system is not active, the manageability engine's logic to enforce the policy, wherein to enforce the policy establishes a first hierarchical trust layer to access the network.

**32**. A platform according to claim 31, the service operating system is to establish a secure communication link with the policy decision point, the service operating system to gather and forward posture information associated with the capability operating system, the policy decision point to indicate what network access the capability operating system can obtain to the network based on a comparison of the posture information gathered by the service operating system, the service operating system's policy enforcement agent to enforce the level of access based on the indication from the policy decision point, wherein enforcing the level of access is to maintain the second hierarchical trust level to access the network.

**33**. A platform according to claim 24, wherein the platform is to operate according to a virtualization technology scheme.

**34**. A machine-accessible medium comprising content, which, when executed by a machine resident on a platform to couple to a network causes the machine to:

establish a secure communication channel via a communication link on the platform, the secure communication channel establish with a policy enforcement agent on the platform;

obtain posture information associated with the machine and an access requester on the platform, the access requester to seek access to the network;

cryptographically sign the posture information with a secret key maintained in the memory; and

forward the cryptographically signed posture information to the policy enforcement agent via the secure communication channel, the cryptographically signed posture information to be forwarded to a policy decision point for the network via another secure communication channel established between the policy enforcement agent and the policy decision point, wherein the policy decision point is to indicate what access the access requester can obtain to the network based on a comparison of the posture information to network administrative policies.

**35**. A machine-accessible medium according to claim 34, wherein the posture information associated with the access requester and the machine is based on integrity measurements of the access requester and the machine, the integrity measurements to include at least one integrity measurement selected from the following group of: an anti-virus parameter, a firewall status, a software version, a hardware status, a log file and an existence of given software in a memory on the platform.

**36**. A machine-accessible medium according to claim 34, wherein the secure communication channel established with the policy enforcement point is using established extensible markup language (XML) signatures.

* * * * *