US 20050123025A1

(19) United States

(12) Patent Application Publication

(10) Pub. No.: US 2005/0123025 A1

(43) Pub. Date: Jun. 9, 2005

Sorrells et al.

(54) WIRELESS LOCAL AREA NETWORK (WLAN) USING UNIVERSAL FREQUENCY TRANSLATION TECHNOLOGY INCLUDING MULTI-PHASE EMBODIMENTS AND CIRCUIT IMPLEMENTATIONS

(76) Inventors: **David F. Sorrells**, Middleburg, FL (US); **Michael J. Bultman**, Jacksonville, FL (US); **Robert W. Cook**, Switzerland, FL (US); **Richard C. Looke**, Jacksonville, FL (US); **Charley D. Moses JR.**, Jacksonville, FL (US); **Gregory S. Rawlins**, Lake Mary, FL (US); **Michael W. Rawlins**, Lake Mary, FL (US)

Correspondence Address:
STERNE, KESSLER, GOLDSTEIN & FOX PLLC
1100 NEW YORK AVENUE, N.W.
WASHINGTON, DC 20005 (US)

(21) Appl. No.: **11/041,422**

(22) Filed: **Jan. 25, 2005**

Related U.S. Application Data

(63) Continuation of application No. 09/632,856, filed on Aug. 4, 2000, and which is a continuation-in-part of application No. 09/525,615, filed on Mar. 14, 2000, now Pat. No. 6,853,690, and which is a continuation-in-part of application No. 09/526,041, filed on Mar. 14, 2000, now Pat. No. 6,879,817.

(60) Provisional application No. 60/147,129, filed on Aug. 4, 1999.

Publication Classification

(51) **Int. Cl.**[7] **H04B 1/69**

(52) **U.S. Cl.** **375/130**; 375/308

(57) **ABSTRACT**

Frequency translation and applications of the same are described herein, including RF modem and wireless local area network (WLAN) applications. In embodiments, the WLAN invention includes an antenna, an LNA/PA module, a receiver, a transmitter, a control signal generator, a demodulation/modulation facilitation module, and a MAC interface. The WLAN receiver includes at least one universal frequency translation module that frequency down-converts a received EM signal. In embodiments, the UFT based receiver is configured in a multi-phase embodiment to reduce or eliminate re-radiation that is caused by DC offset. The WLAN transmitter includes at least one universal frequency translation module that frequency up-converts a baseband signal in preparation for transmission over the wireless LAN. In embodiments, the UFT based transmitter is configured in a differential and multi-phase embodiment to reduce carrier insertion and spectral growth.

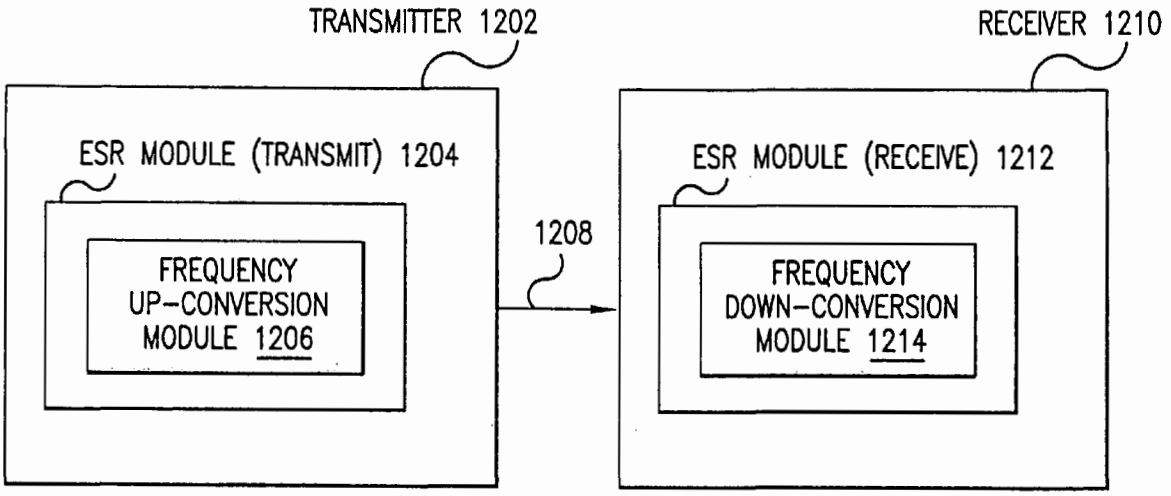

AMAZON-1021
IPR2026-00471

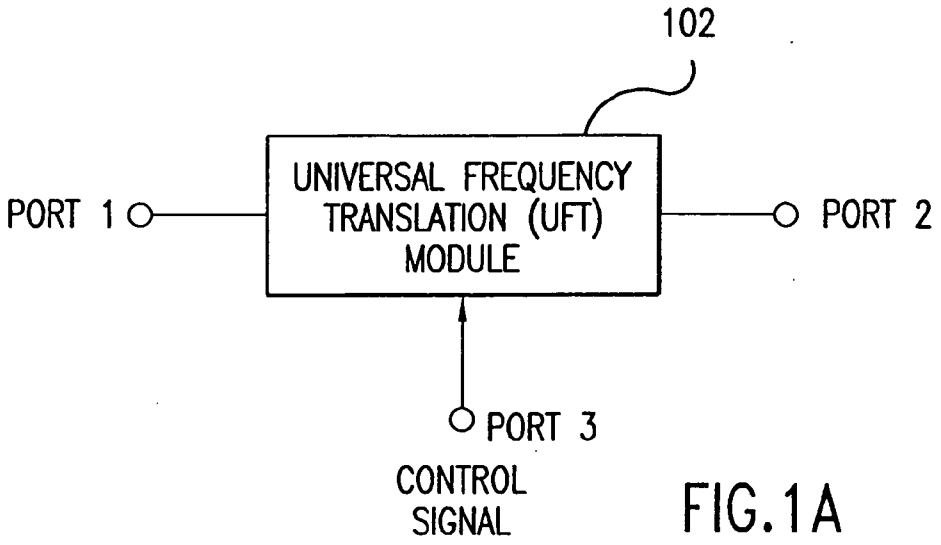
102
UNIVERSAL FREQUENCY TRANSLATION (UFT) MODULE
PORT 1
PORT 2
PORT 3
CONTROL SIGNAL

FIG.1A

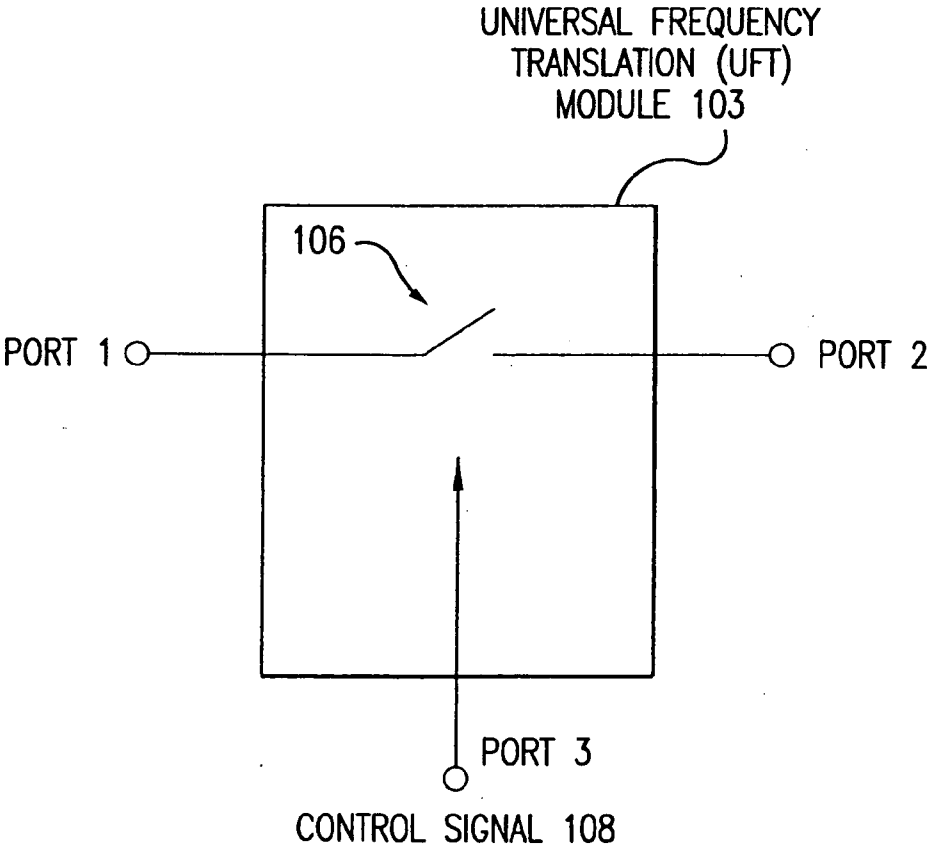
UNIVERSAL FREQUENCY TRANSLATION (UFT) MODULE 103
106
PORT 1
PORT 2
PORT 3
CONTROL SIGNAL 108

FIG.1B

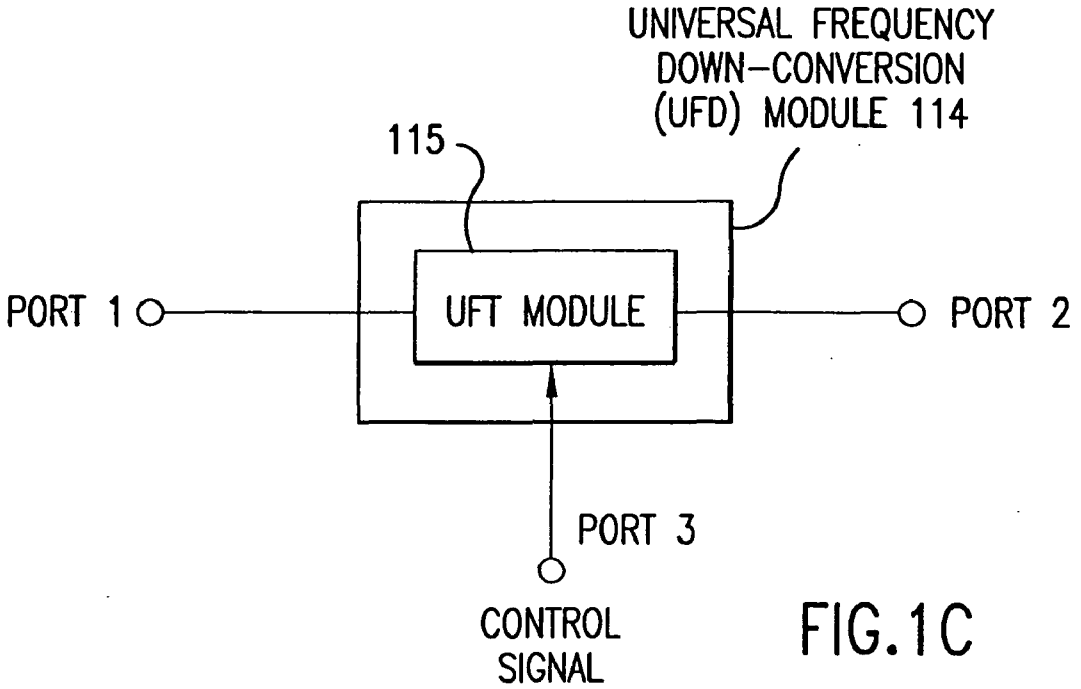
UNIVERSAL FREQUENCY
DOWN-CONVERSION
(UFD) MODULE 114
115
UFT MODULE
PORT 1
PORT 2
PORT 3
CONTROL
SIGNAL

FIG.1C

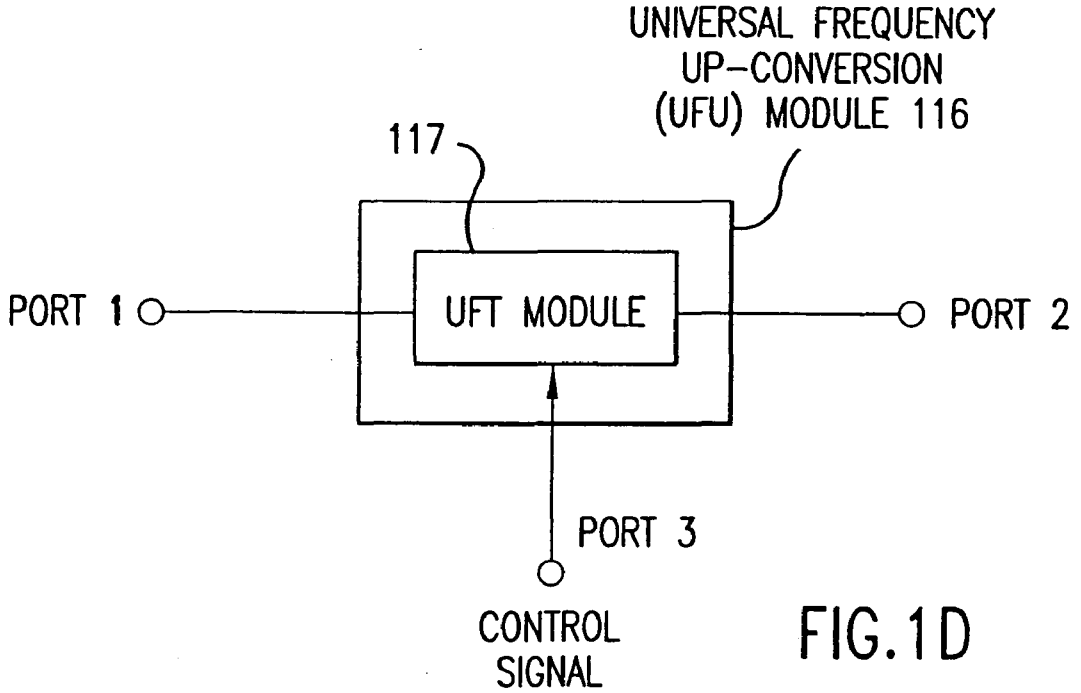
UNIVERSAL FREQUENCY
UP-CONVERSION
(UFU) MODULE 116
117
UFT MODULE
PORT 1
PORT 2
PORT 3
CONTROL
SIGNAL

FIG.1D

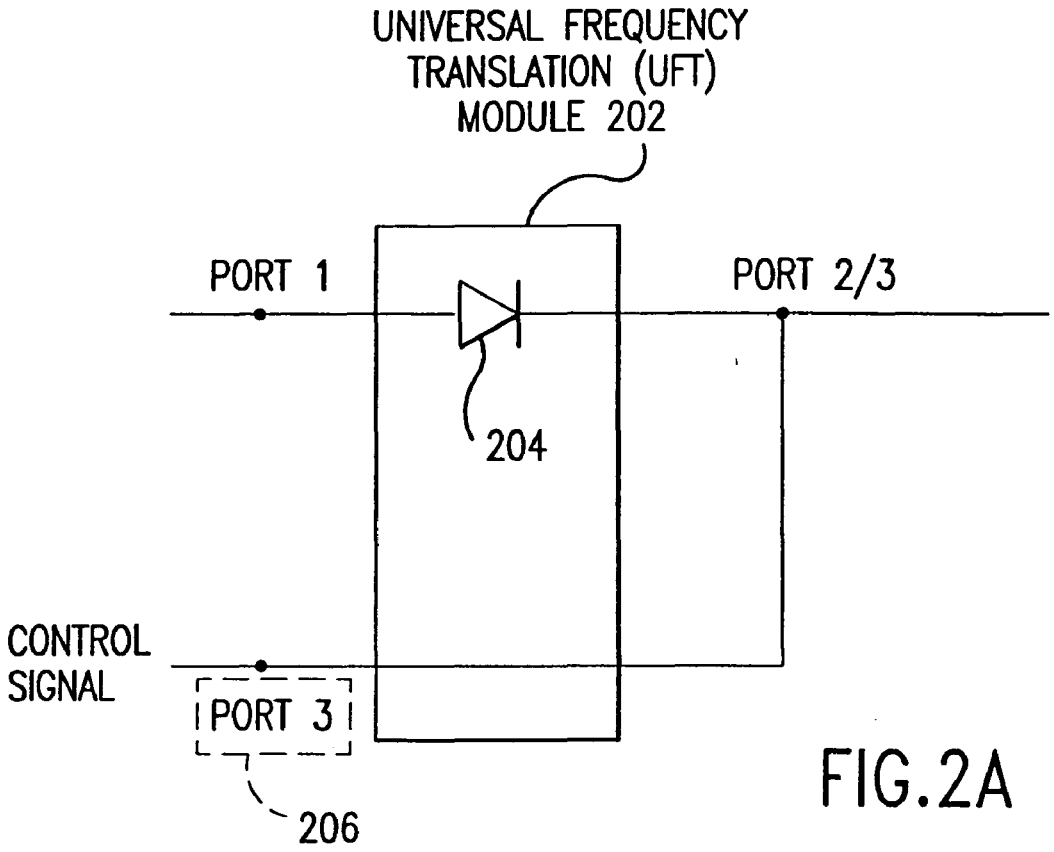
UNIVERSAL FREQUENCY
TRANSLATION (UFT)
MODULE 202
PORT 1
PORT 2/3
204
CONTROL
SIGNAL
PORT 3
206

FIG.2A

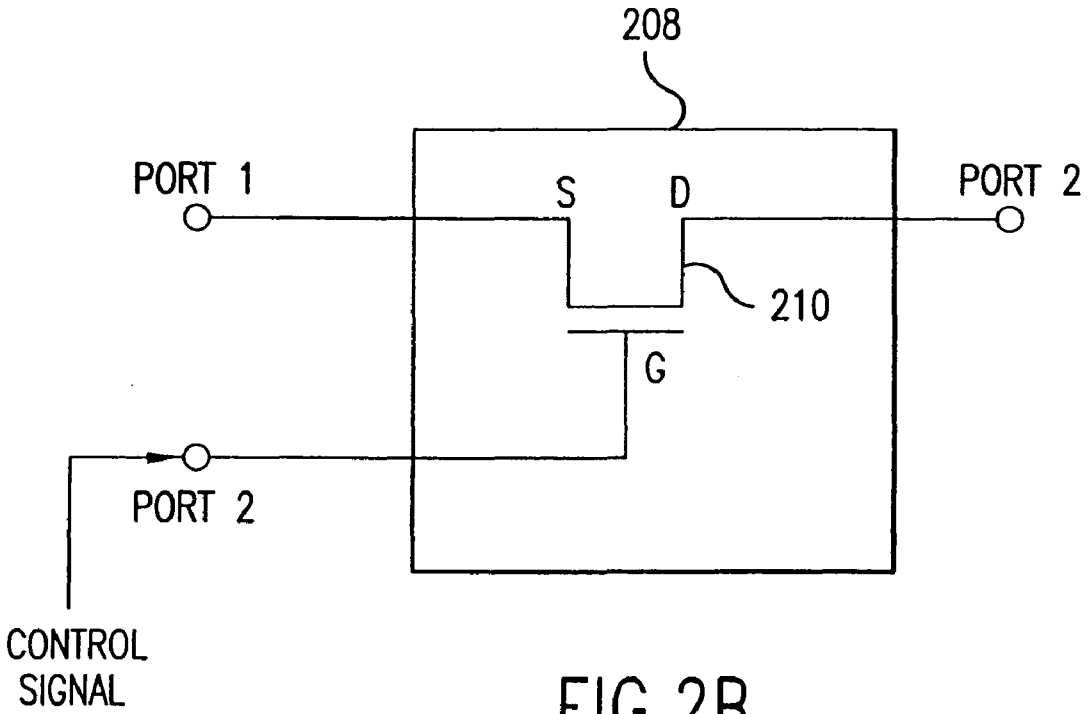
208
PORT 1
S
D
PORT 2
210
G
PORT 2
CONTROL
SIGNAL

FIG.2B

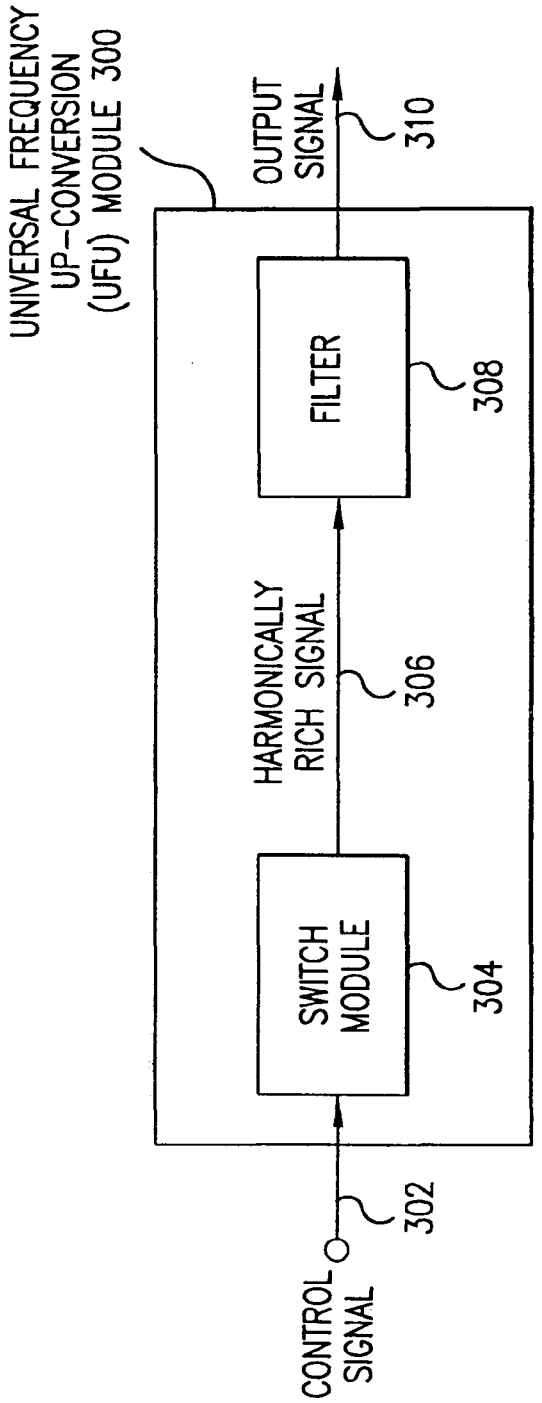
UNIVERSAL FREQUENCY UP-CONVERSION (UFU) MODULE 300
OUTPUT SIGNAL
310
FILTER
308
HARMONICALLY RICH SIGNAL
306
SWITCH MODULE
304
302
CONTROL SIGNAL

FIG.3

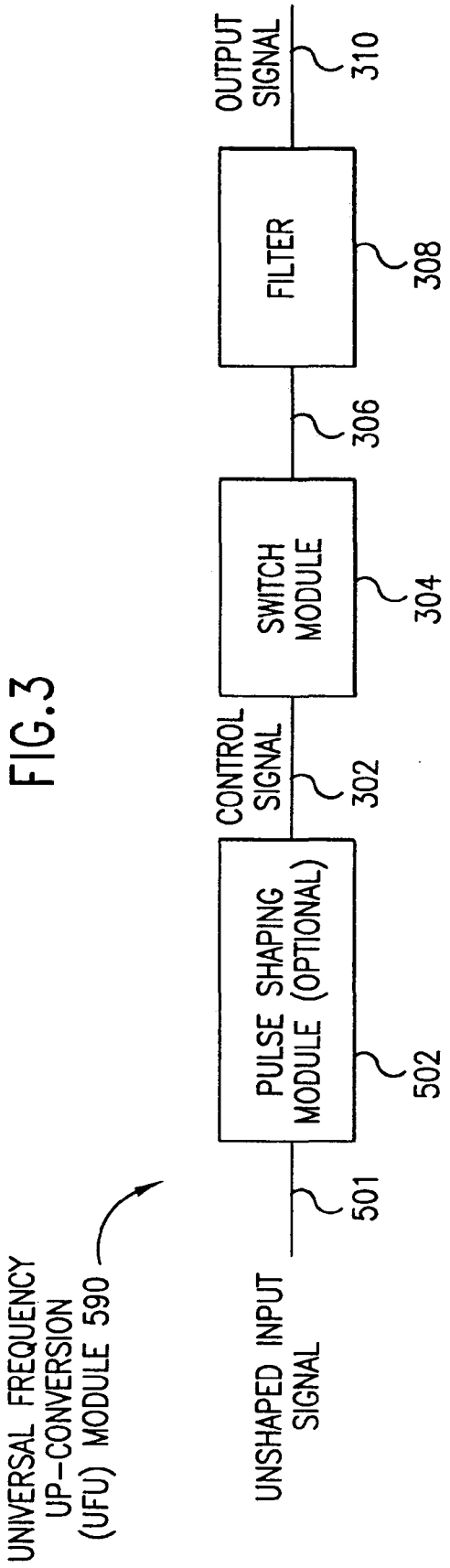
OUTPUT SIGNAL
310
FILTER
308
306
SWITCH MODULE
304
CONTROL SIGNAL
302
PULSE SHAPING MODULE (OPTIONAL)
502
501
UNSHAPED INPUT SIGNAL
UNIVERSAL FREQUENCY UP-CONVERSION (UFU) MODULE 590

FIG.5

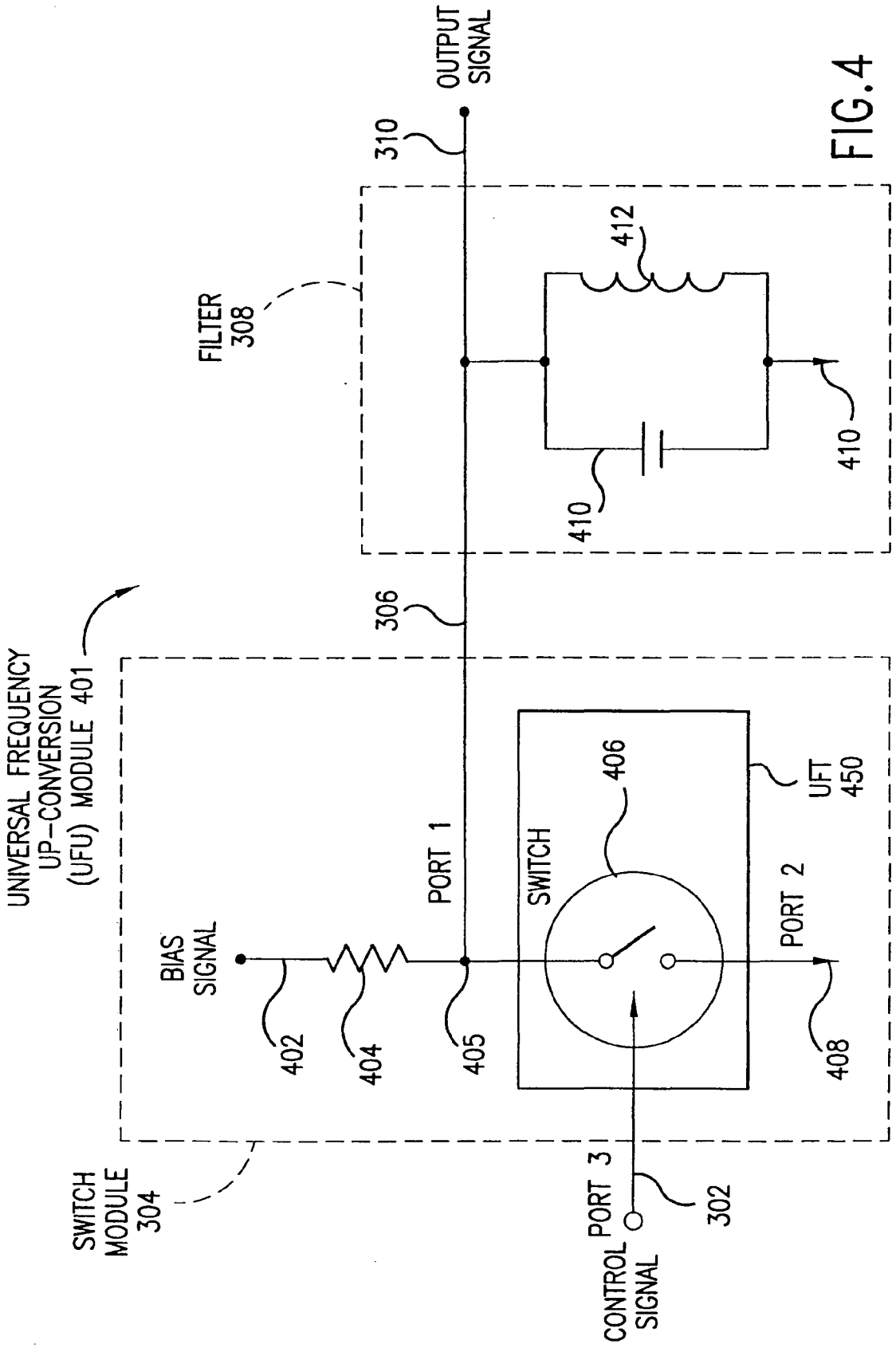
UNIVERSAL FREQUENCY UP-CONVERSION (UFU) MODULE 401
SWITCH MODULE 304
BIAS SIGNAL
402
404
405
PORT 1
306
FILTER 308
310
OUTPUT SIGNAL
SWITCH
406
UFT 450
PORT 2
408
PORT 3
CONTROL SIGNAL
302
410
412
410

FIG. 4

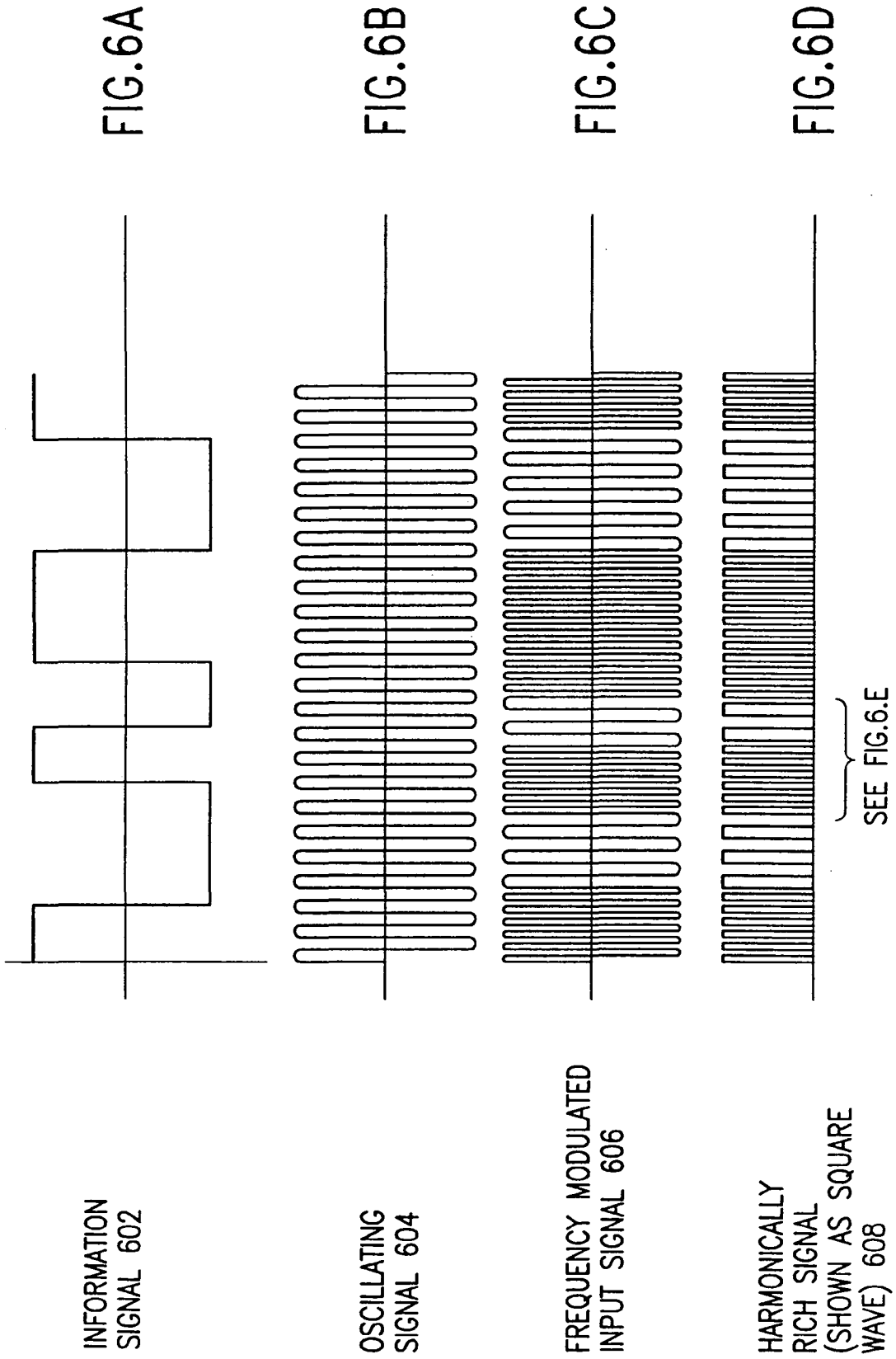
FIG.6A
INFORMATION SIGNAL 602
FIG.6B
OSCILLATING SIGNAL 604
FIG.6C
FREQUENCY MODULATED INPUT SIGNAL 606
FIG.6D
HARMONICALLY RICH SIGNAL (SHOWN AS SQUARE WAVE) 608
SEE FIG.6.E

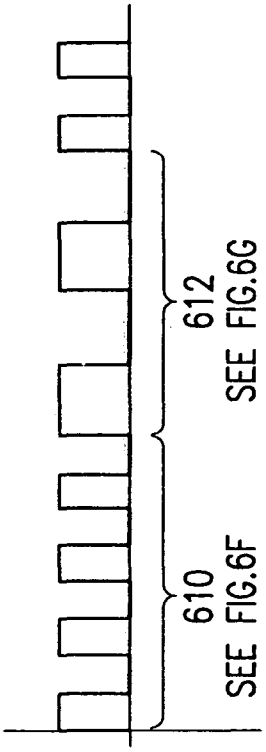

EXPANDED VIEW OF HARMONICALLY RICH SIGNAL 608

FIG.6E

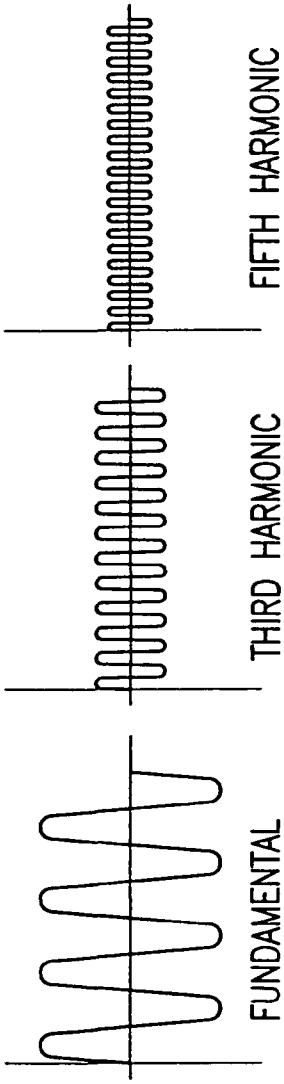

HARMONICS OF SIGNAL 610 (SHOWN SEPARATELY)

FIG.6F

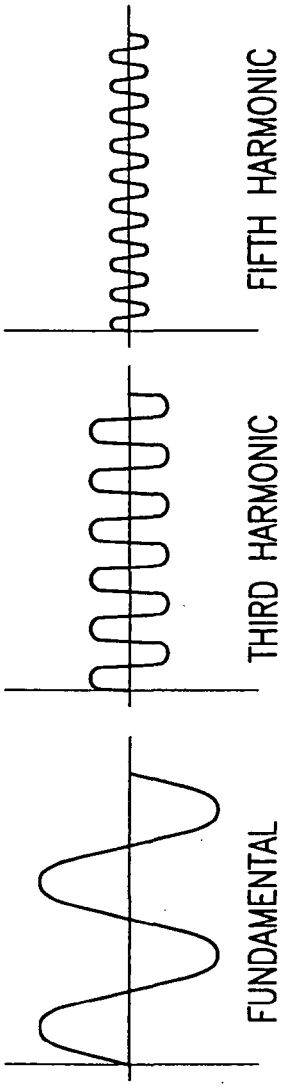

HARMONICS OF SIGNAL 612 (SHOWN SEPARATELY)

FIG.6G

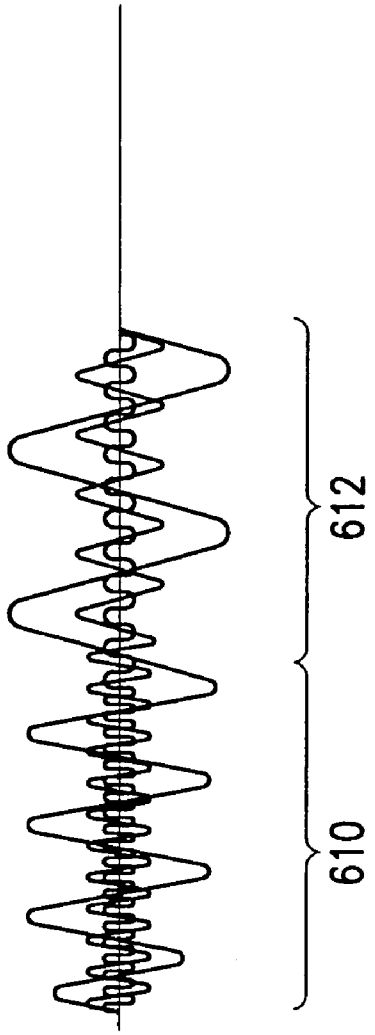

HARMONICS OF SIGNALS 610 AND 612 (SHOWN SIMULTANEOUSLY BUT NOT SUMMED)

FIG.6H

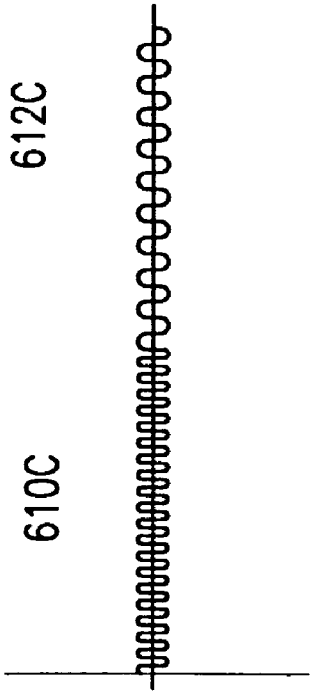

FILTERED OUTPUT SIGNAL 614

FIG.6I

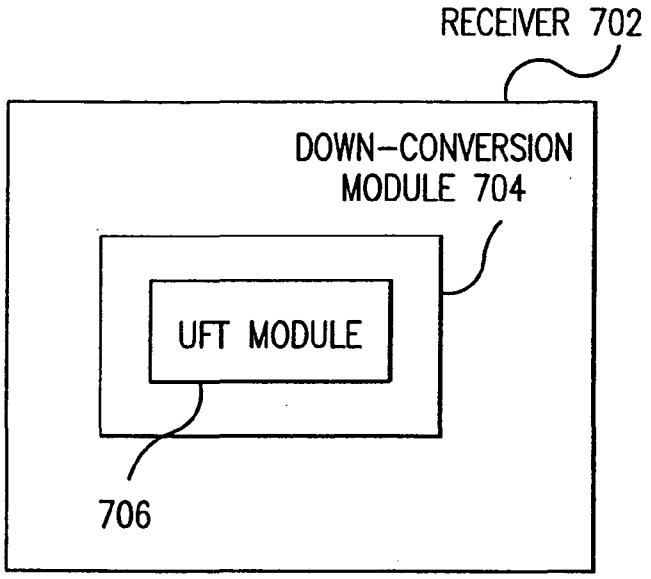

FIG.7

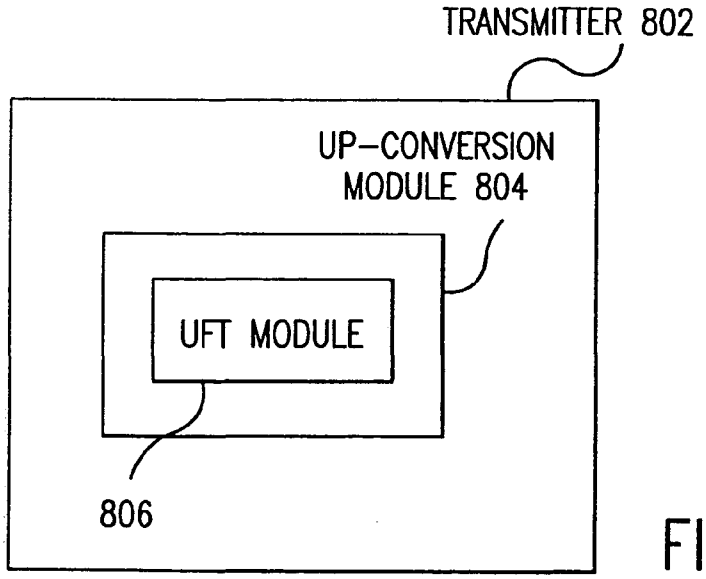

FIG.8

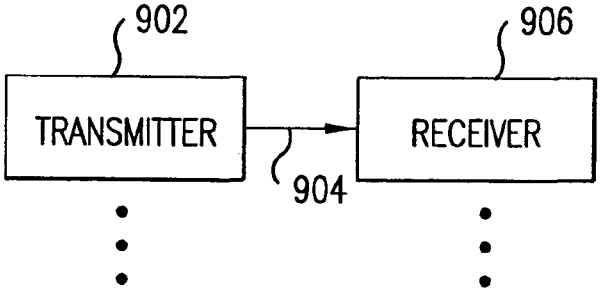

FIG.9

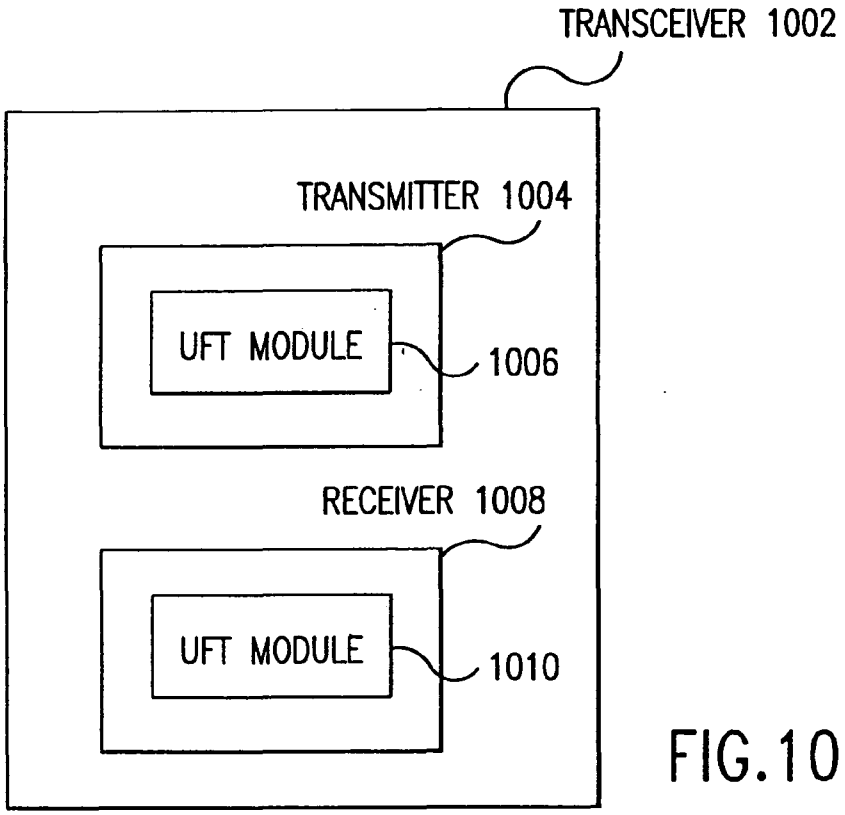
TRANSCEIVER 1002
TRANSMITTER 1004
UFT MODULE
1006
RECEIVER 1008
UFT MODULE
1010

FIG.10

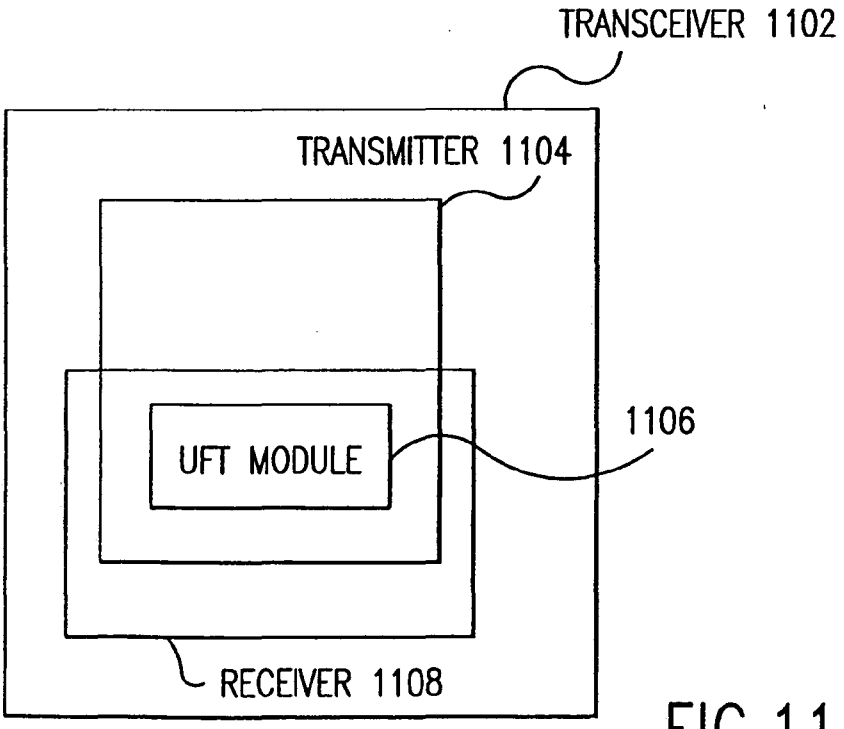
TRANSCEIVER 1102
TRANSMITTER 1104
UFT MODULE
1106
RECEIVER 1108

FIG.11

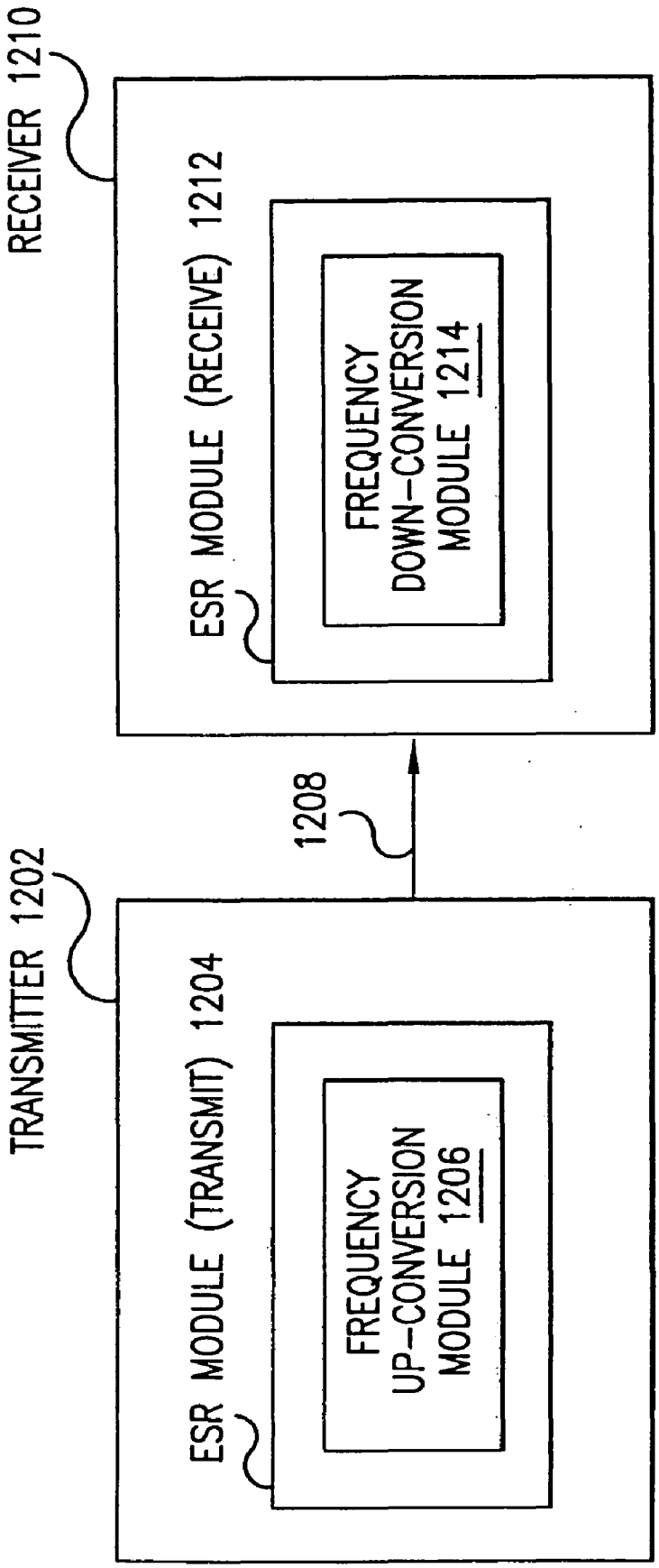
RECEIVER 1210
ESR MODULE (RECEIVE) 1212
FREQUENCY DOWN-CONVERSION MODULE 1214
1208
TRANSMITTER 1202
ESR MODULE (TRANSMIT) 1204
FREQUENCY UP-CONVERSION MODULE 1206

FIG.12

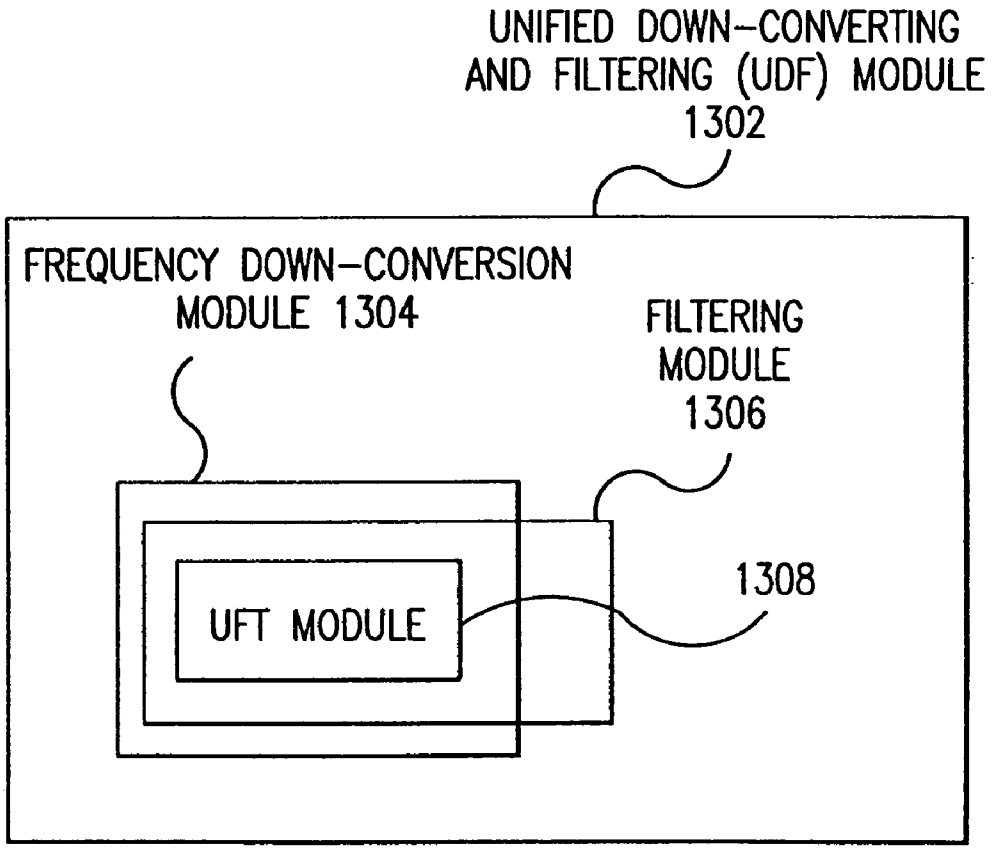
UNIFIED DOWN-CONVERTING
AND FILTERING (UDF) MODULE
1302
FREQUENCY DOWN-CONVERSION
MODULE 1304
FILTERING
MODULE
1306
1308
UFT MODULE

FIG.13

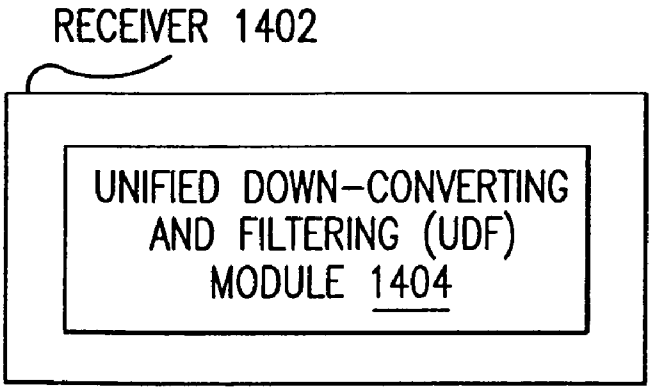
RECEIVER 1402
UNIFIED DOWN-CONVERTING
AND FILTERING (UDF)
MODULE 1404

FIG.14

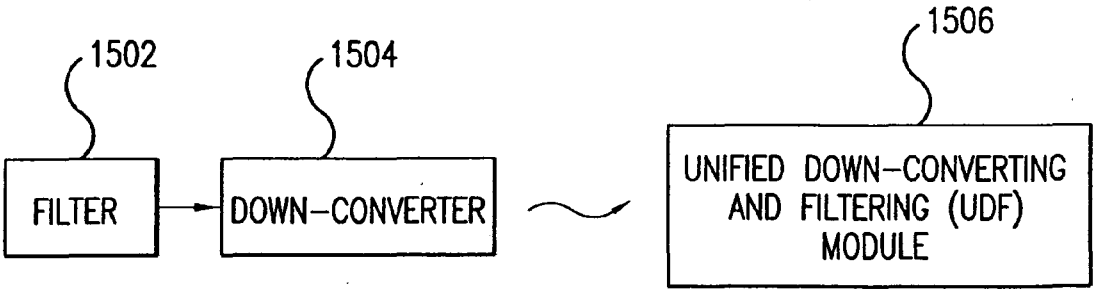

FIG.15A

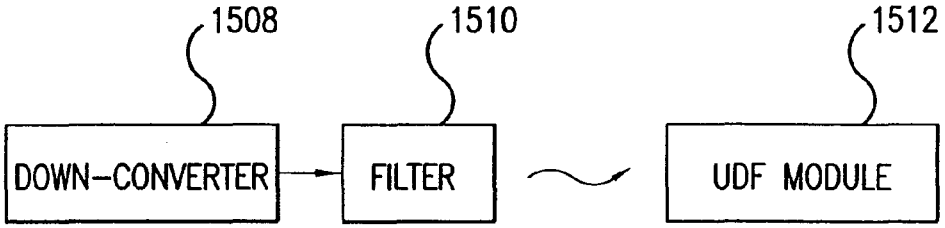

FIG.15B

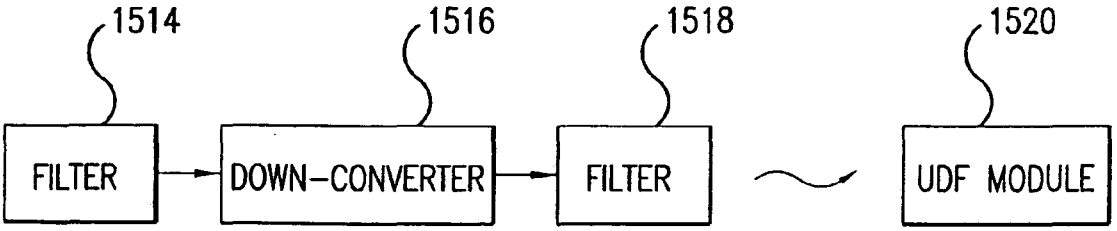

FIG.15C

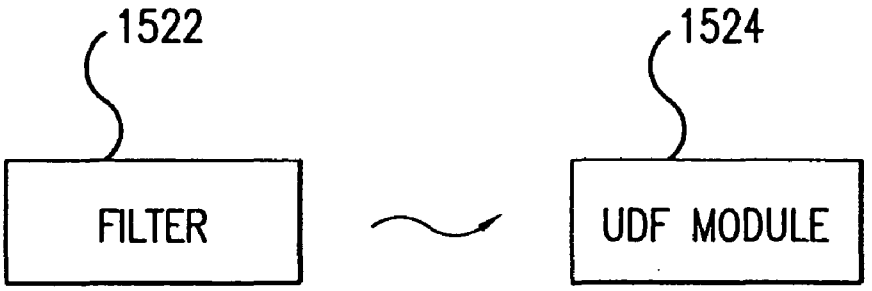

FIG.15D

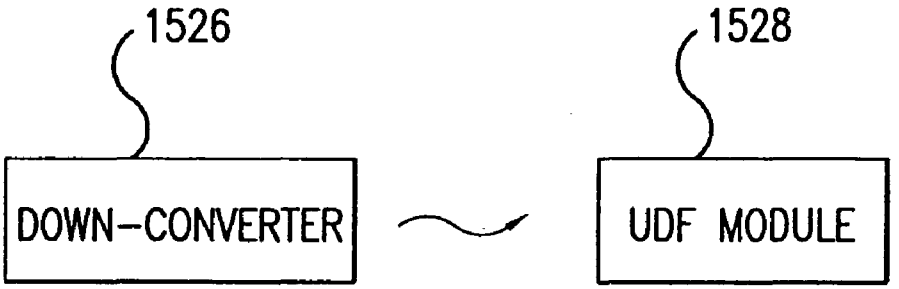

FIG.15E

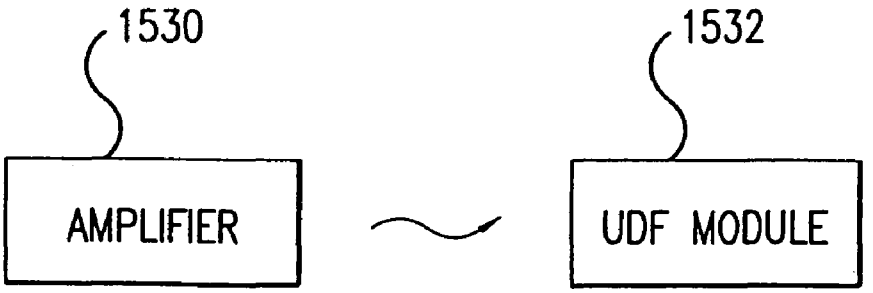

FIG.15F

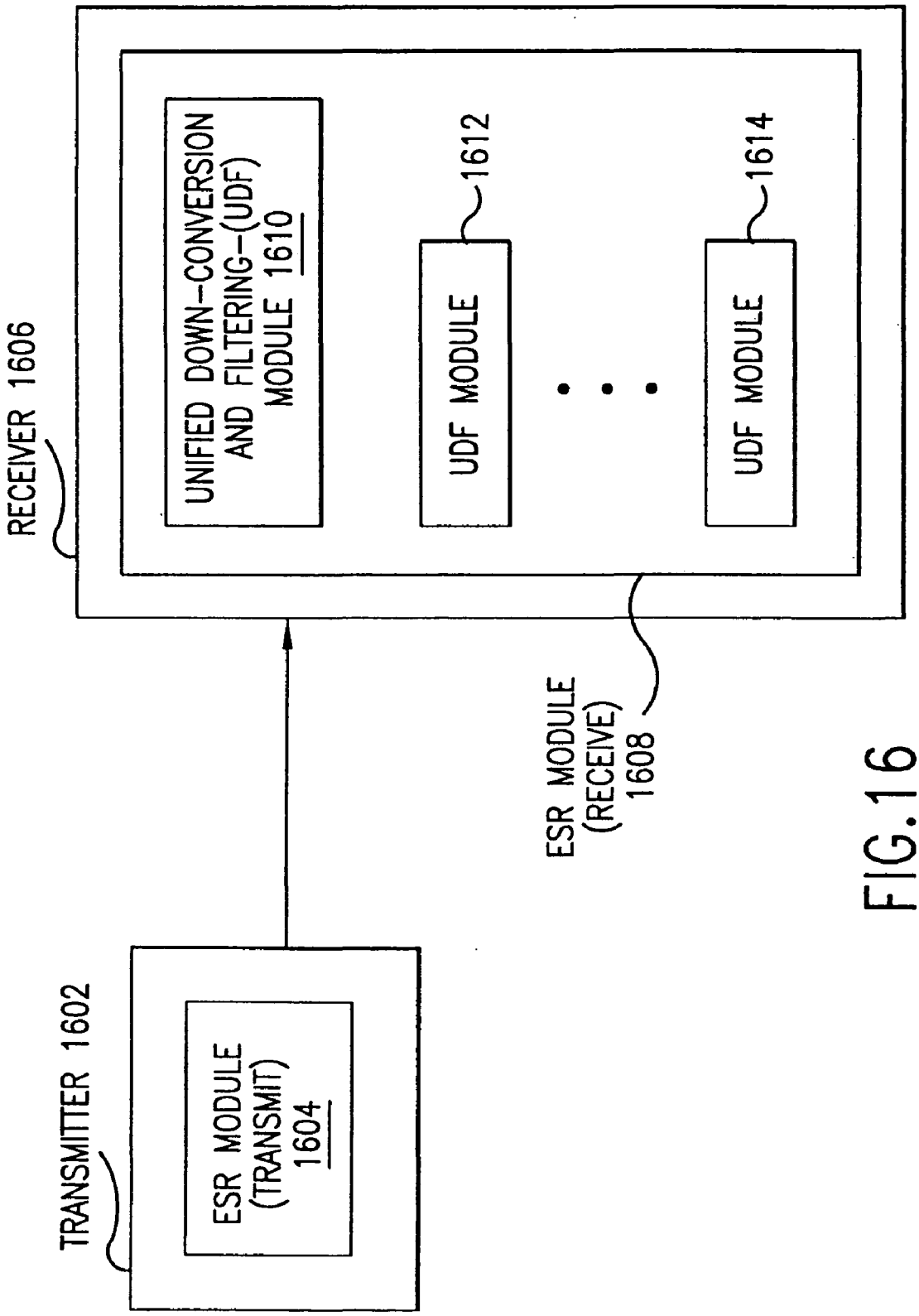
RECEIVER 1606
UNIFIED DOWN-CONVERSION AND FILTERING-(UDF) MODULE 1610
UDF MODULE
1612
UDF MODULE
1614
ESR MODULE (RECEIVE) 1608
TRANSMITTER 1602
ESR MODULE (TRANSMIT) 1604

FIG.16

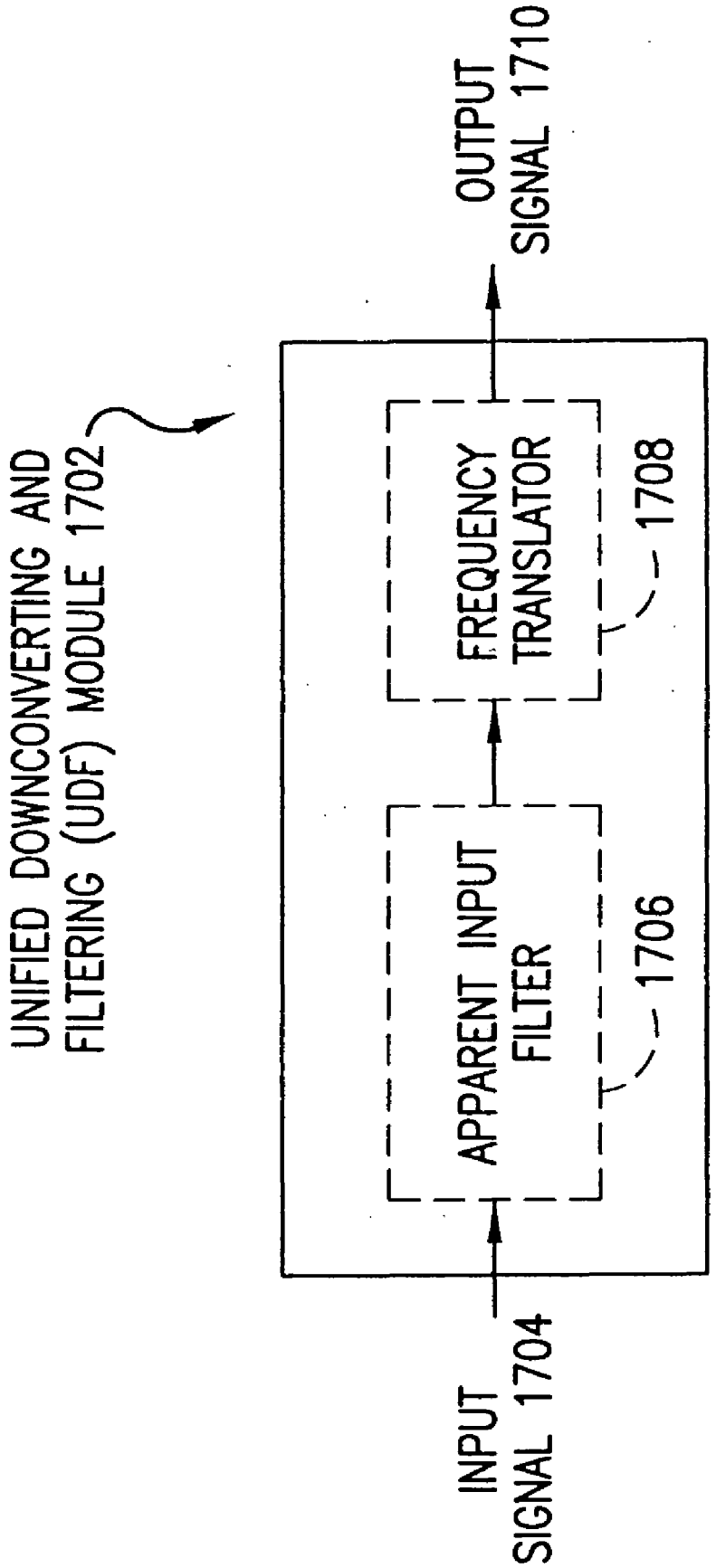
UNIFIED DOWNCONVERTING AND
FILTERING (UDF) MODULE 1702
INPUT
SIGNAL 1704
APPARENT INPUT
FILTER
1706
FREQUENCY
TRANSLATOR
1708
OUTPUT
SIGNAL 1710

FIG.17

1802

TIME / NODE	t−1 (RISING EDGE OF ϕ_1)	t−1 (RISING EDGE OF ϕ_2)	t (RISING EDGE OF ϕ_1)	t (RISING EDGE OF ϕ_2)	t+1 (RISING EDGE OF ϕ_1)
1902	VI_{t-1} 1804	VI_{t-1} 1808	VI_t 1816	VI_t 1826	VI_{t+1} 1838
1904	—	VI_{t-1} 1810	VI_{t-1} 1818	VI_t 1828	VI_t 1840
1906	VO_{t-1} 1806	VO_{t-1} 1812	VO_t 1820	VO_t 1830	VO_{t+1} 1842
1908	—	VO_{t-1} 1814	VO_{t-1} 1822	VO_t 1832	VO_t 1844
1910	— 1807	—	VO_{t-1} 1824	VO_{t-1} 1834	VO_t 1846
1912	—	— 1815	—	VO_{t-1} 1836	VO_{t-1} 1848
1918	—	—	—	—	VI_t − 1850 $0.1 * VO_t$ − $0.8 * VO_{t-1}$

FIG.18

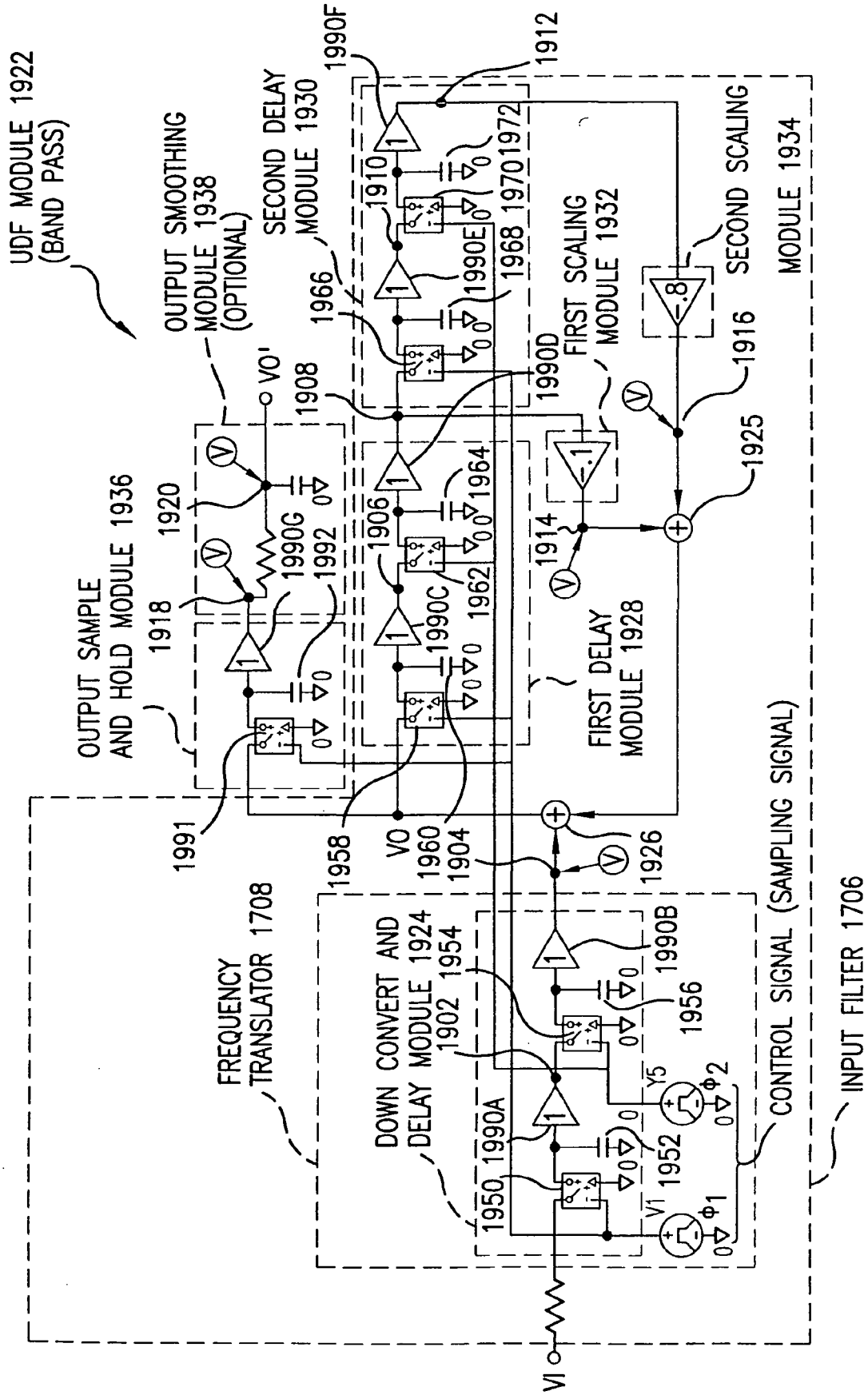
UDF MODULE 1922
(BAND PASS)
OUTPUT SMOOTHING
MODULE 1938
(OPTIONAL)
SECOND DELAY
MODULE 1930
FIRST SCALING
MODULE 1932
SECOND SCALING
MODULE 1934
OUTPUT SAMPLE
AND HOLD MODULE 1936
FIRST DELAY
MODULE 1928
FREQUENCY
TRANSLATOR 1708
DOWN CONVERT AND
DELAY MODULE 1924
CONTROL SIGNAL (SAMPLING SIGNAL)
INPUT FILTER 1706
VI
VO
VO'
1990F
1912
1910
1970
1972
1990E
1968
1966
1908
1990D
1916
1925
1920
1990G
1992
1918
1906
1964
1962
1990C
1914
1991
1958
1960
1904
1926
1990B
1954
1902
1956
1990A
1950
1952
Y5
V1
Φ1
Φ2

FIG. 19

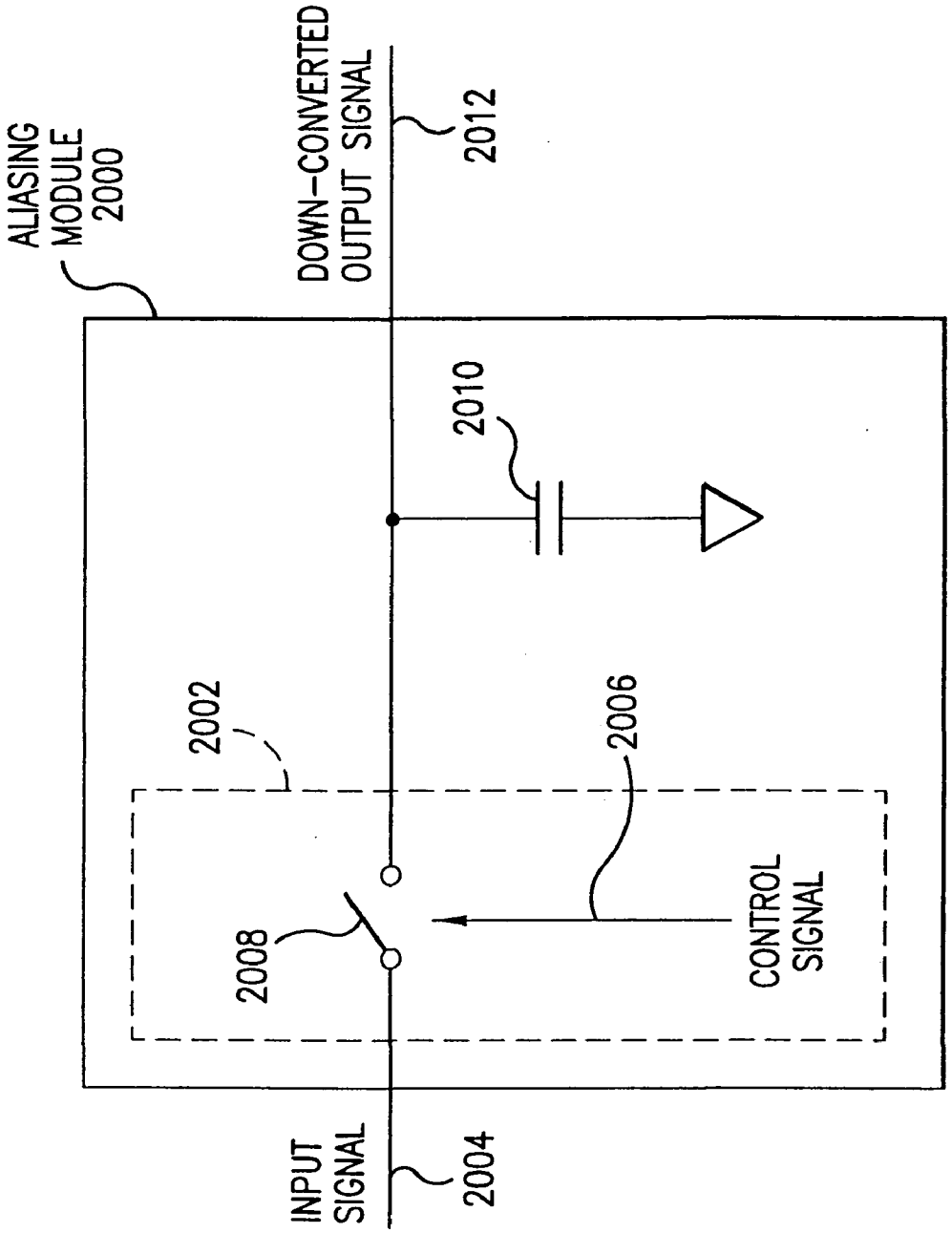
ALIASING MODULE 2000
DOWN-CONVERTED OUTPUT SIGNAL
2012
2010
2002
2006
2008
CONTROL SIGNAL
INPUT SIGNAL
2004

FIG.20A

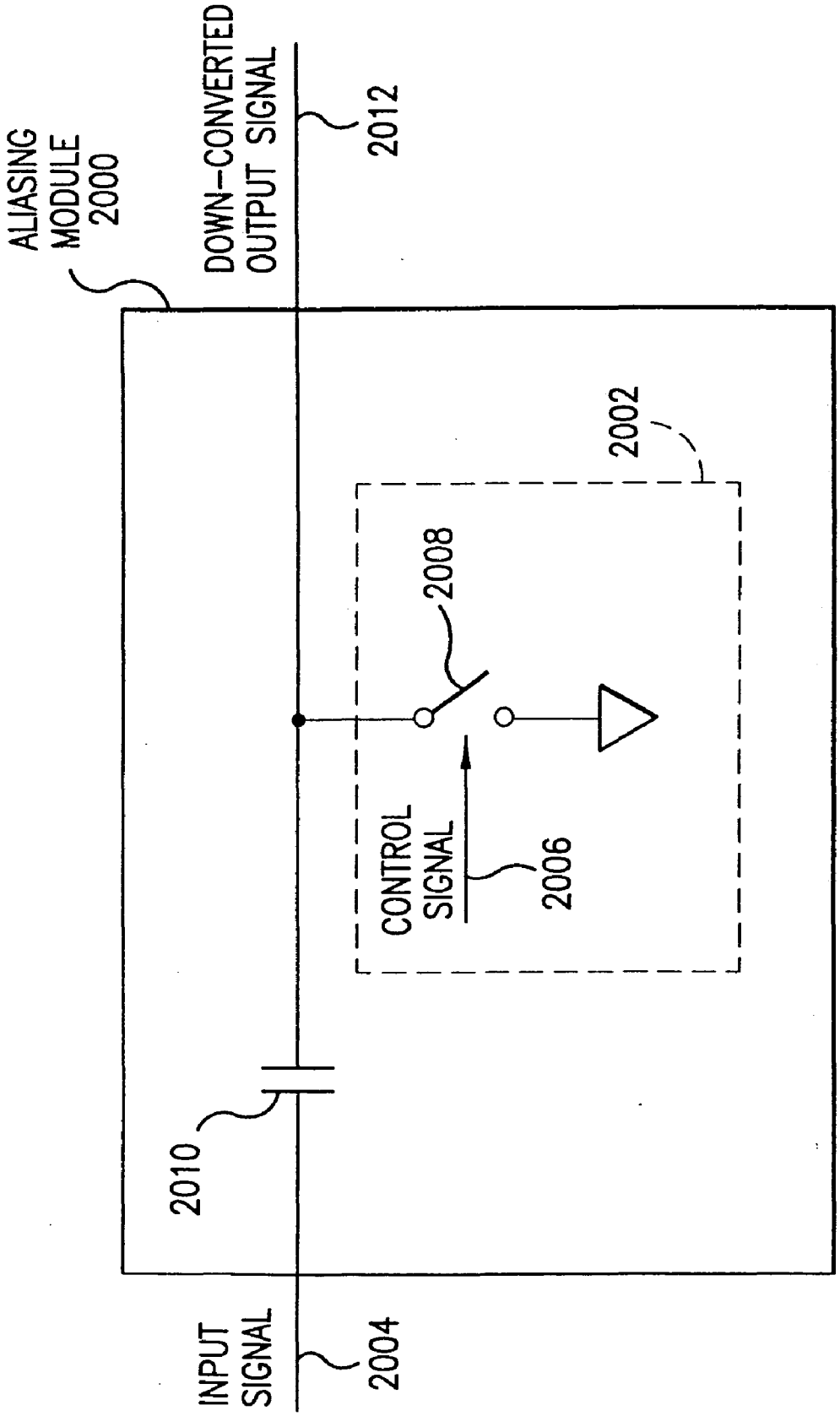
ALIASING MODULE 2000
DOWN-CONVERTED OUTPUT SIGNAL
2012
2002
2008
CONTROL SIGNAL
2006
2010
INPUT SIGNAL
2004

FIG.20A-1

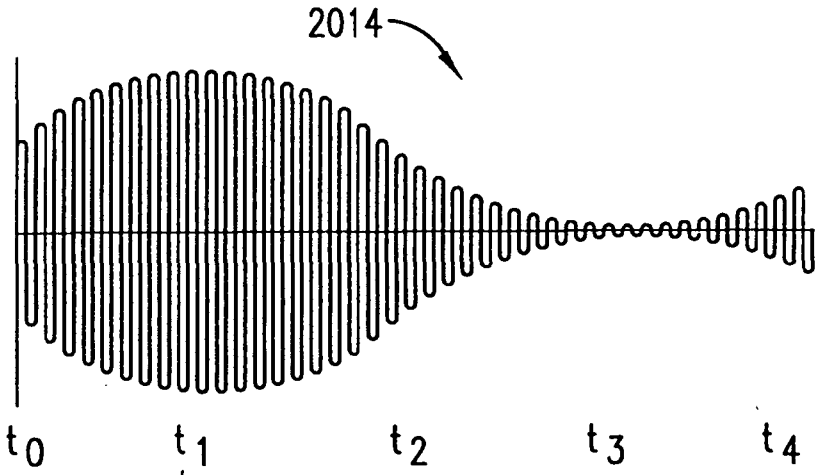

FIG.20B

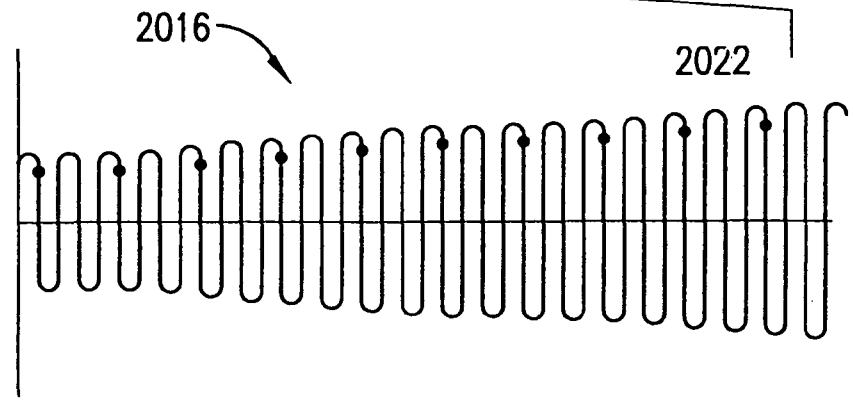

FIG.20C

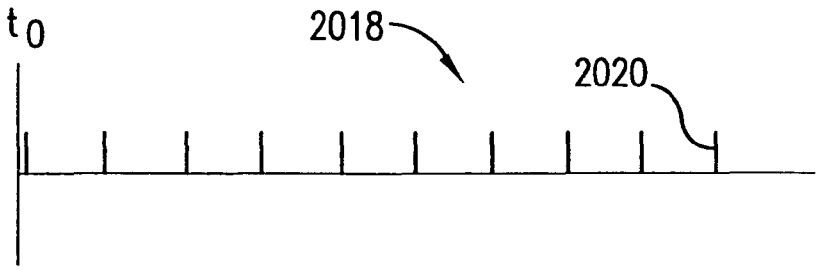

FIG.20D

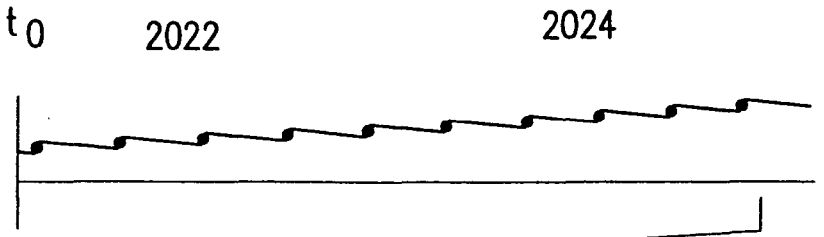

FIG.20E

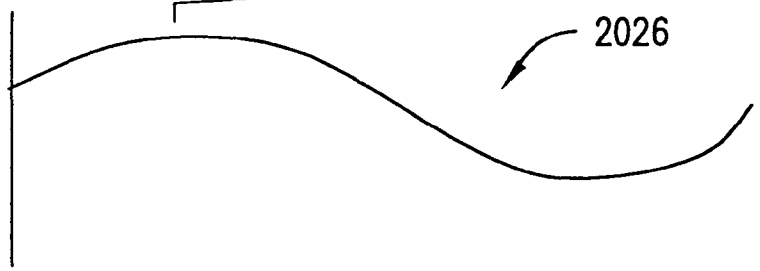

FIG.20F

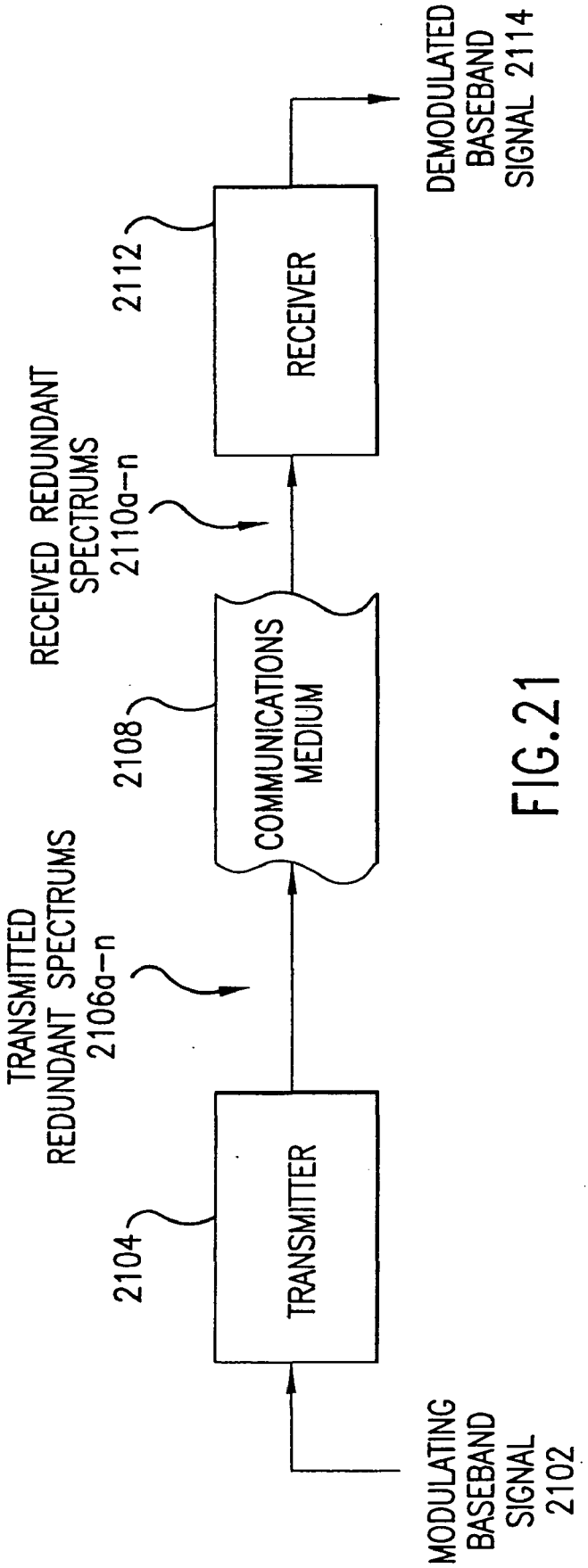
MODULATING BASEBAND SIGNAL 2102
2104
TRANSMITTER
TRANSMITTED REDUNDANT SPECTRUMS 2106a-n
2108
COMMUNICATIONS MEDIUM
RECEIVED REDUNDANT SPECTRUMS 2110a-n
2112
RECEIVER
DEMODULATED BASEBAND SIGNAL 2114

FIG.21

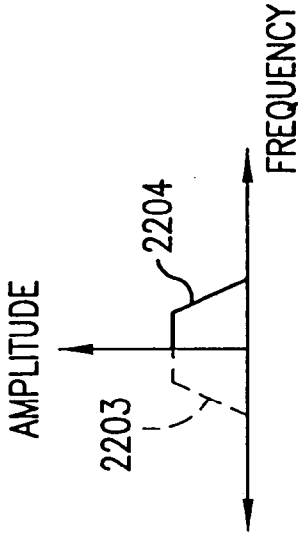

FIG.22B

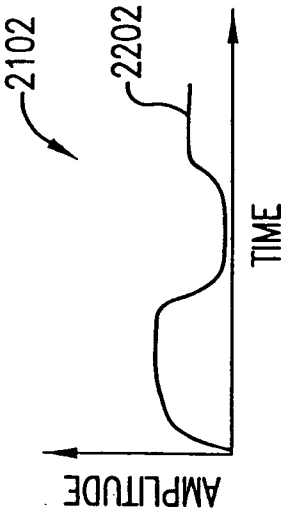

FIG.22A

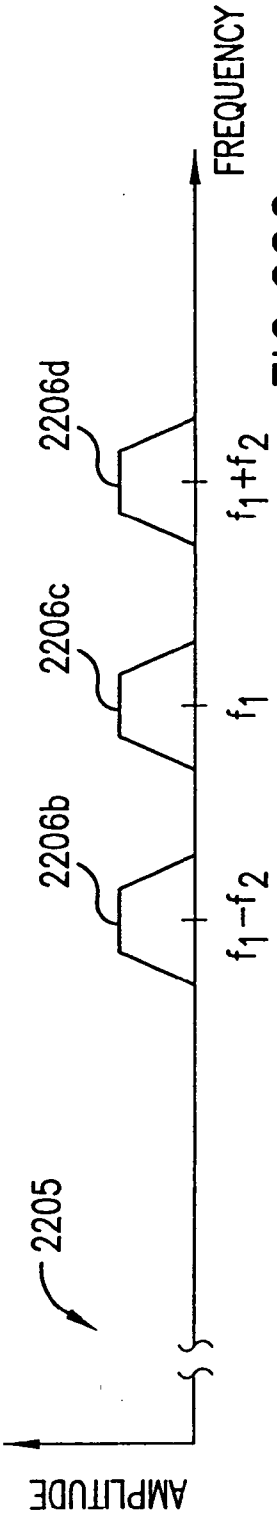

FIG.22C

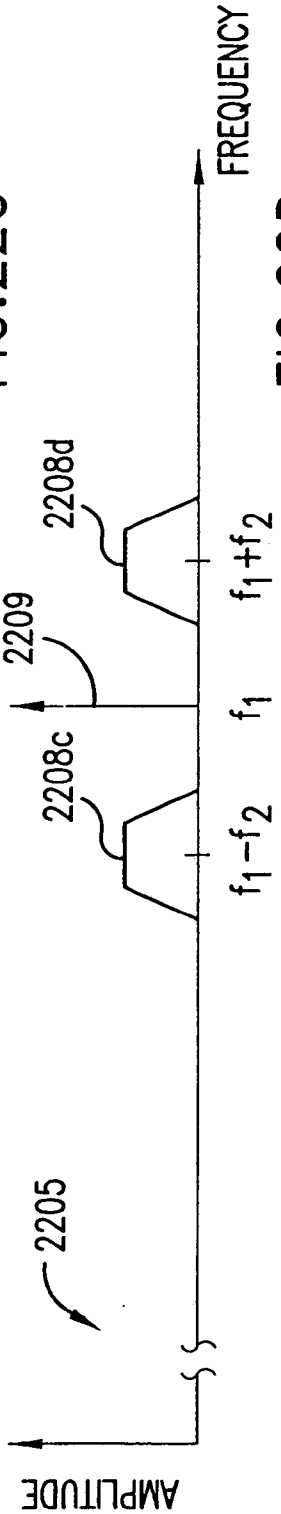

FIG.22D

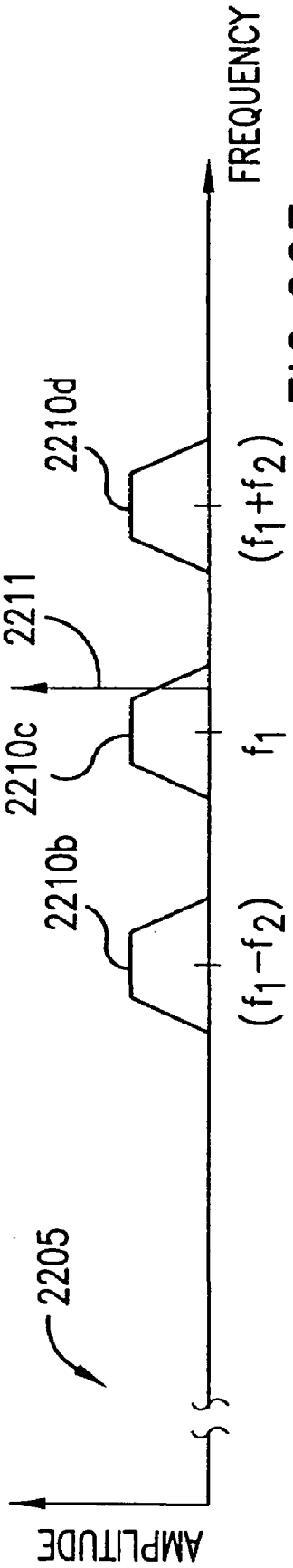

FIG.22E

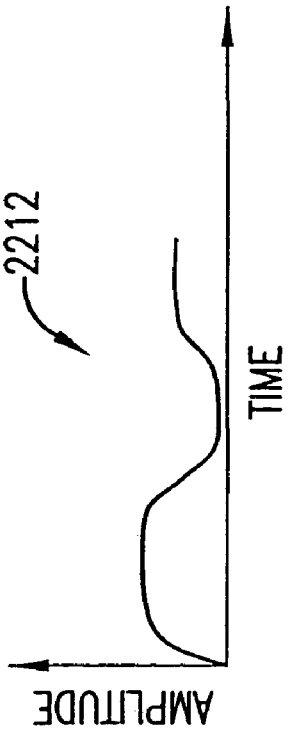

FIG.22F

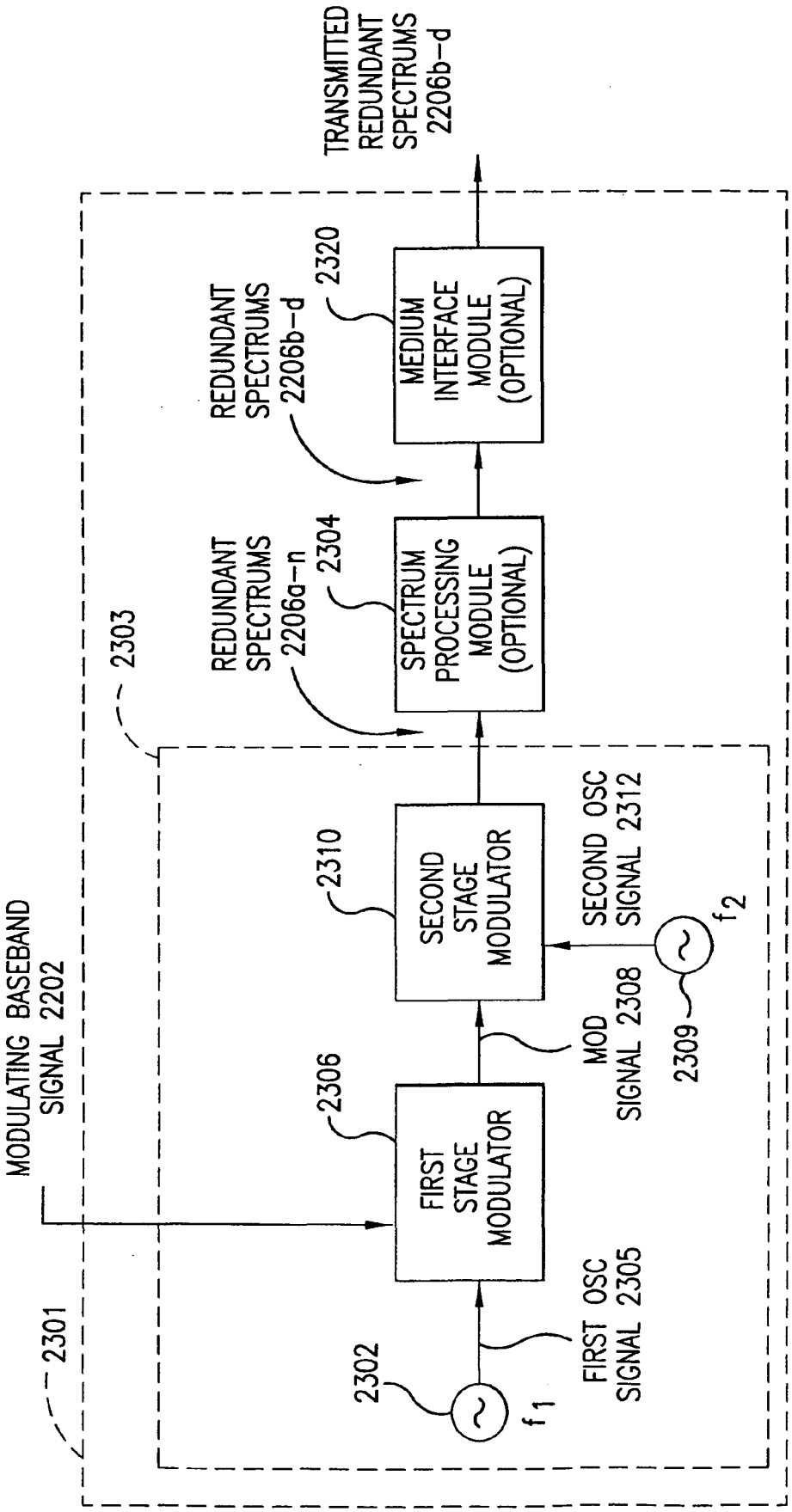
TRANSMITTED REDUNDANT SPECTRUMS 2206b–d
2320
MEDIUM INTERFACE MODULE (OPTIONAL)
REDUNDANT SPECTRUMS 2206b–d
2304
SPECTRUM PROCESSING MODULE (OPTIONAL)
REDUNDANT SPECTRUMS 2206a–n
2303
2310
SECOND STAGE MODULATOR
SECOND OSC SIGNAL 2312
f_2
2309
MOD SIGNAL 2308
2306
FIRST STAGE MODULATOR
MODULATING BASEBAND SIGNAL 2202
FIRST OSC SIGNAL 2305
2302
f_1
2301

FIG.23A

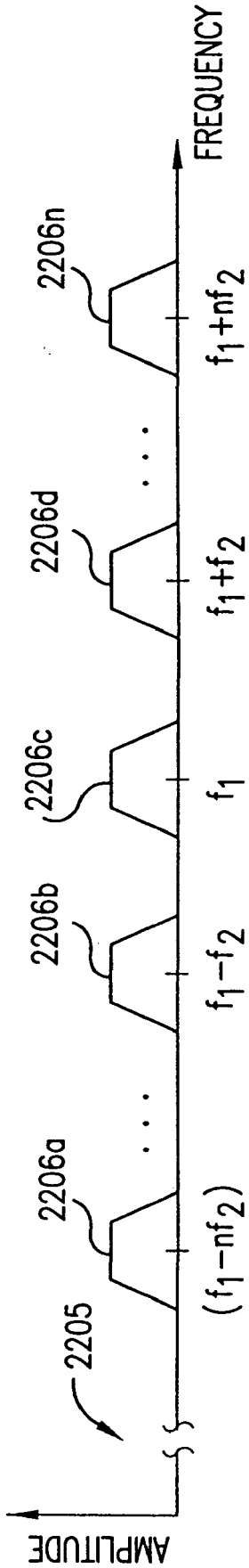

FIG.23B

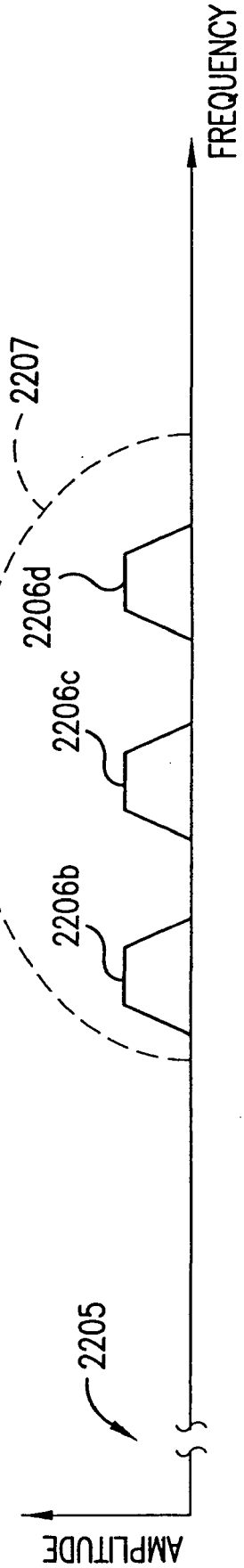

FIG.23C

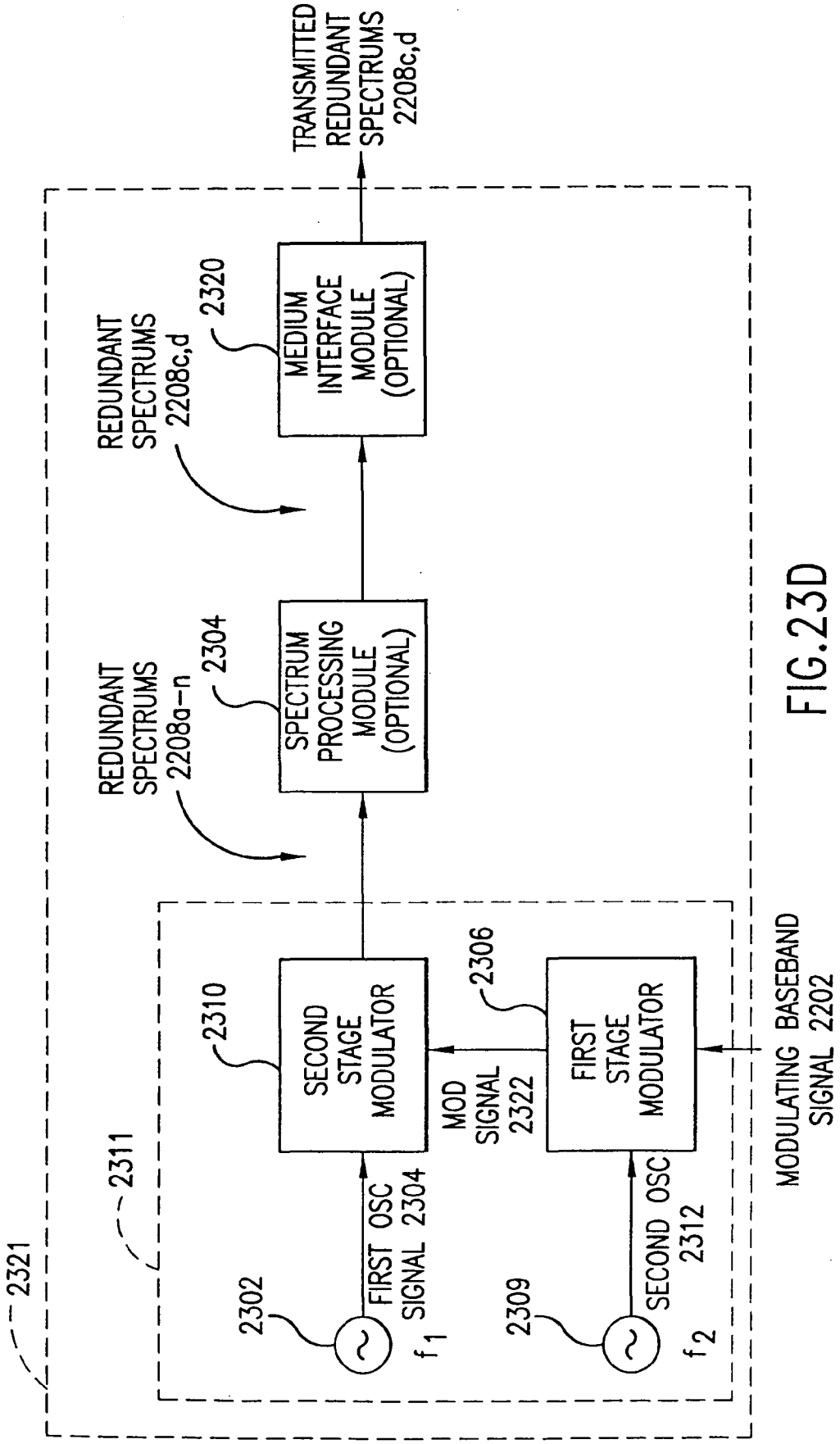
TRANSMITTED REDUNDANT SPECTRUMS 2208c,d
MEDIUM INTERFACE MODULE (OPTIONAL)
2320
REDUNDANT SPECTRUMS 2208c,d
SPECTRUM PROCESSING MODULE (OPTIONAL)
2304
REDUNDANT SPECTRUMS 2208a-n
SECOND STAGE MODULATOR
2310
MOD SIGNAL 2322
2306
FIRST STAGE MODULATOR
MODULATING BASEBAND SIGNAL 2202
2311
2321
2302
FIRST OSC SIGNAL 2304
f1
2309
SECOND OSC 2312
f2

FIG.23D

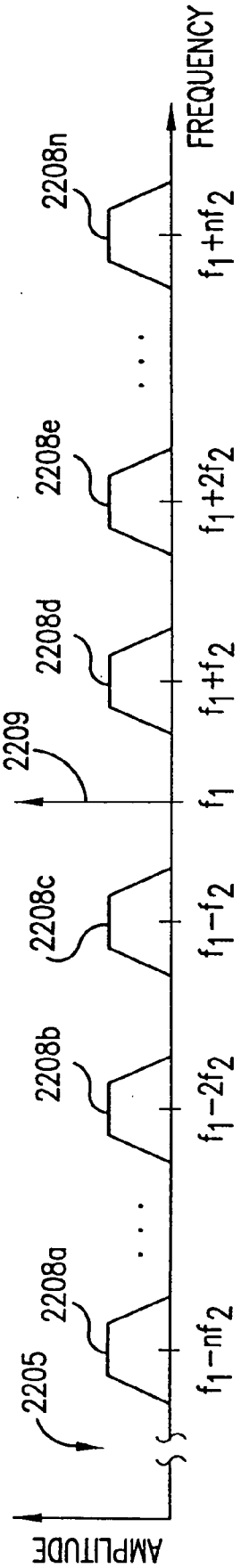

FIG.23E

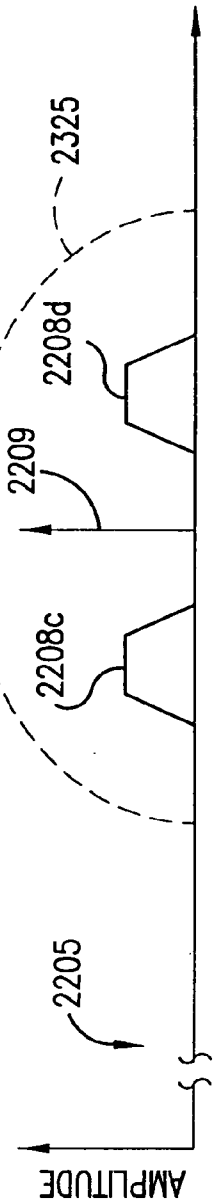

FIG.23F

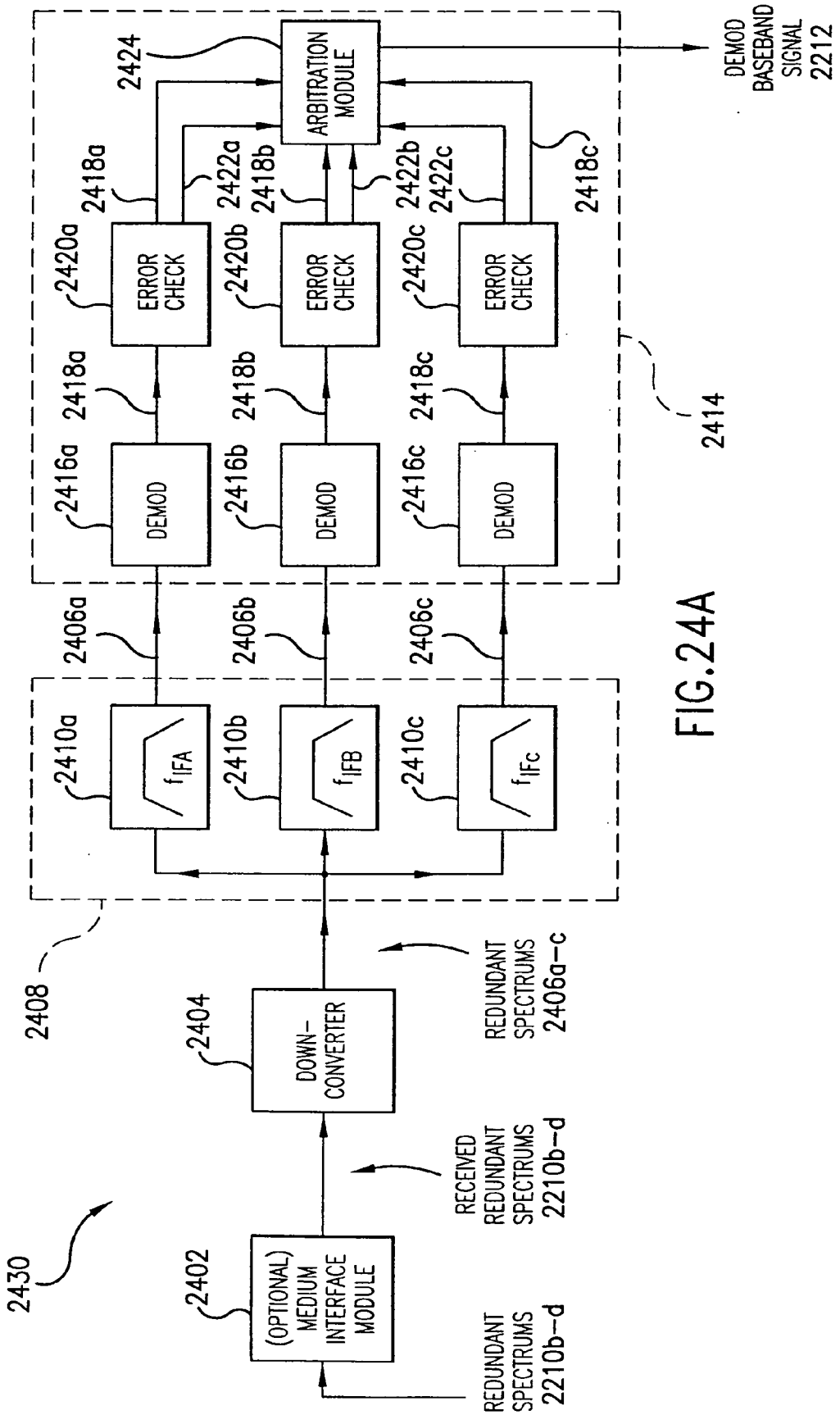
2430
2402
(OPTIONAL) MEDIUM INTERFACE MODULE
REDUNDANT SPECTRUMS 2210b–d
RECEIVED REDUNDANT SPECTRUMS 2210b–d
2404
DOWN-CONVERTER
REDUNDANT SPECTRUMS 2406a–c
2408
2410a
f_{IFA}
2410b
f_{IFB}
2410c
f_{IFc}
2406a
2406b
2406c
2416a
DEMOD
2416b
DEMOD
2416c
DEMOD
2418a
2418b
2418c
2420a
ERROR CHECK
2420b
ERROR CHECK
2420c
ERROR CHECK
2414
2418a
2422a
2418b
2422b
2422c
2418c
2424
ARBITRATION MODULE
DEMOD BASEBAND SIGNAL 2212

FIG.24A

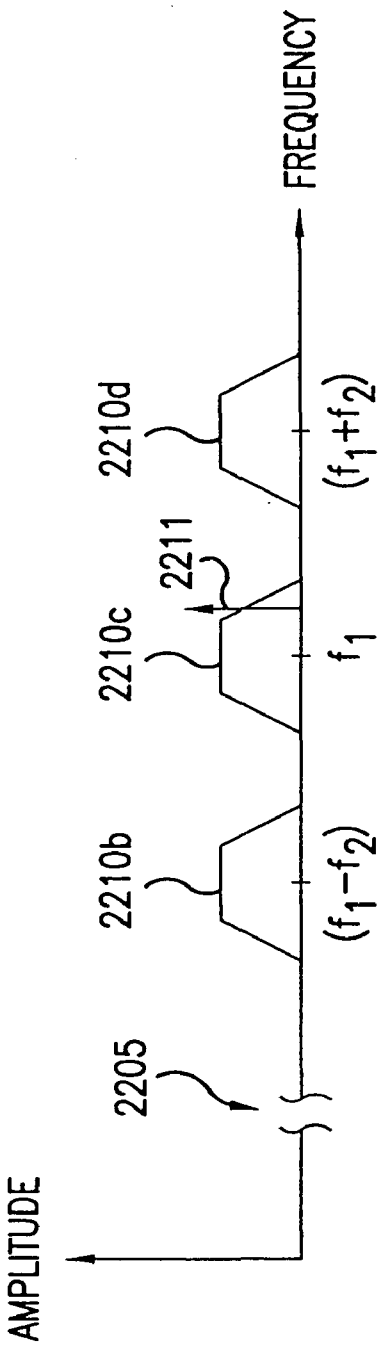

FIG.24B

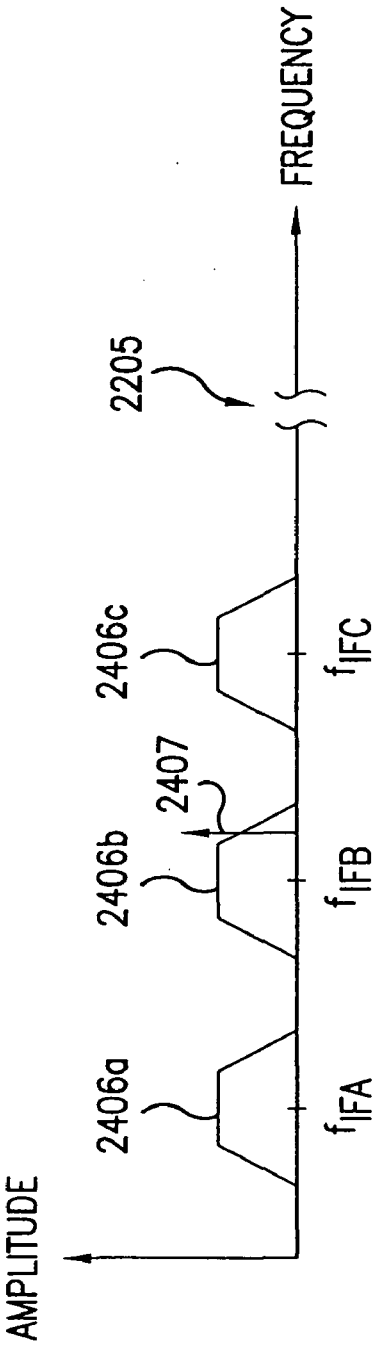

FIG.24C

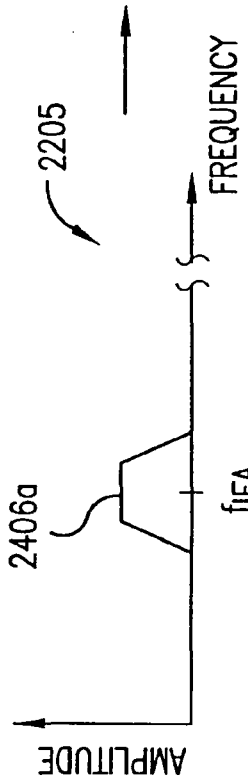

FIG.24D

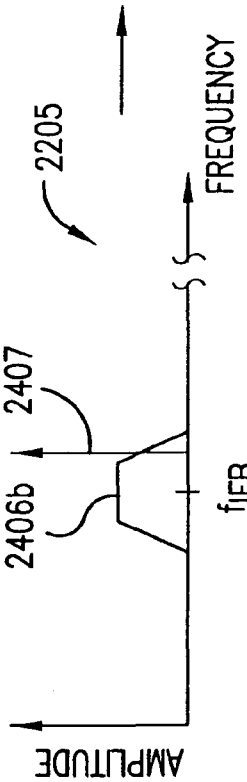

FIG.24E

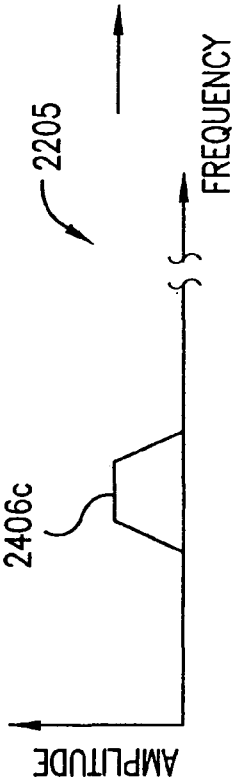

FIG.24F

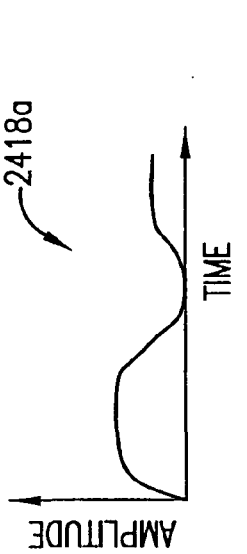

FIG.24G

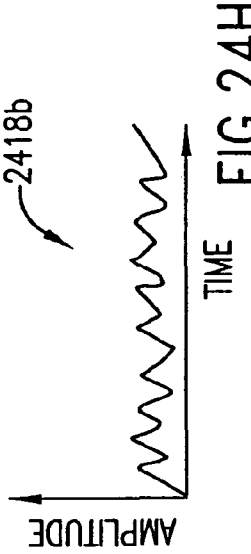

FIG.24H

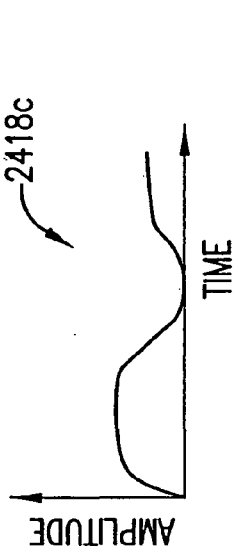

FIG.24I

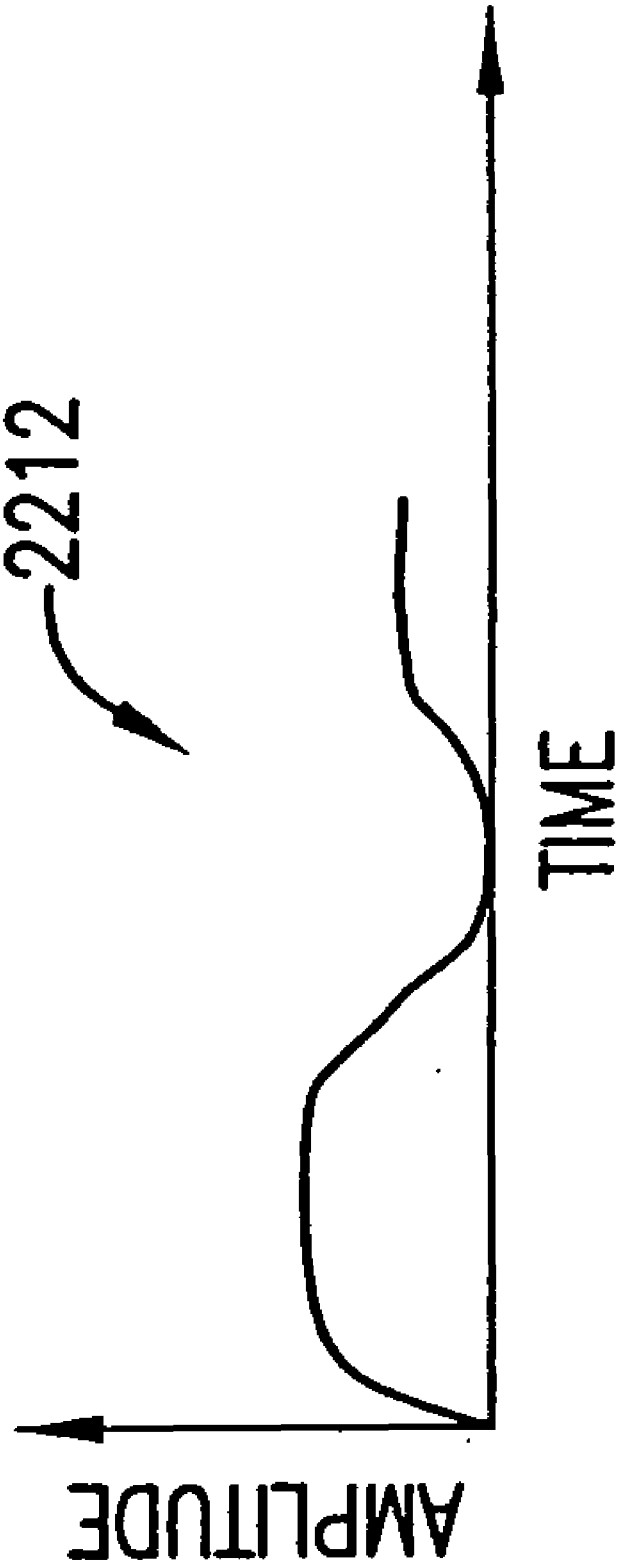

FIG.24J

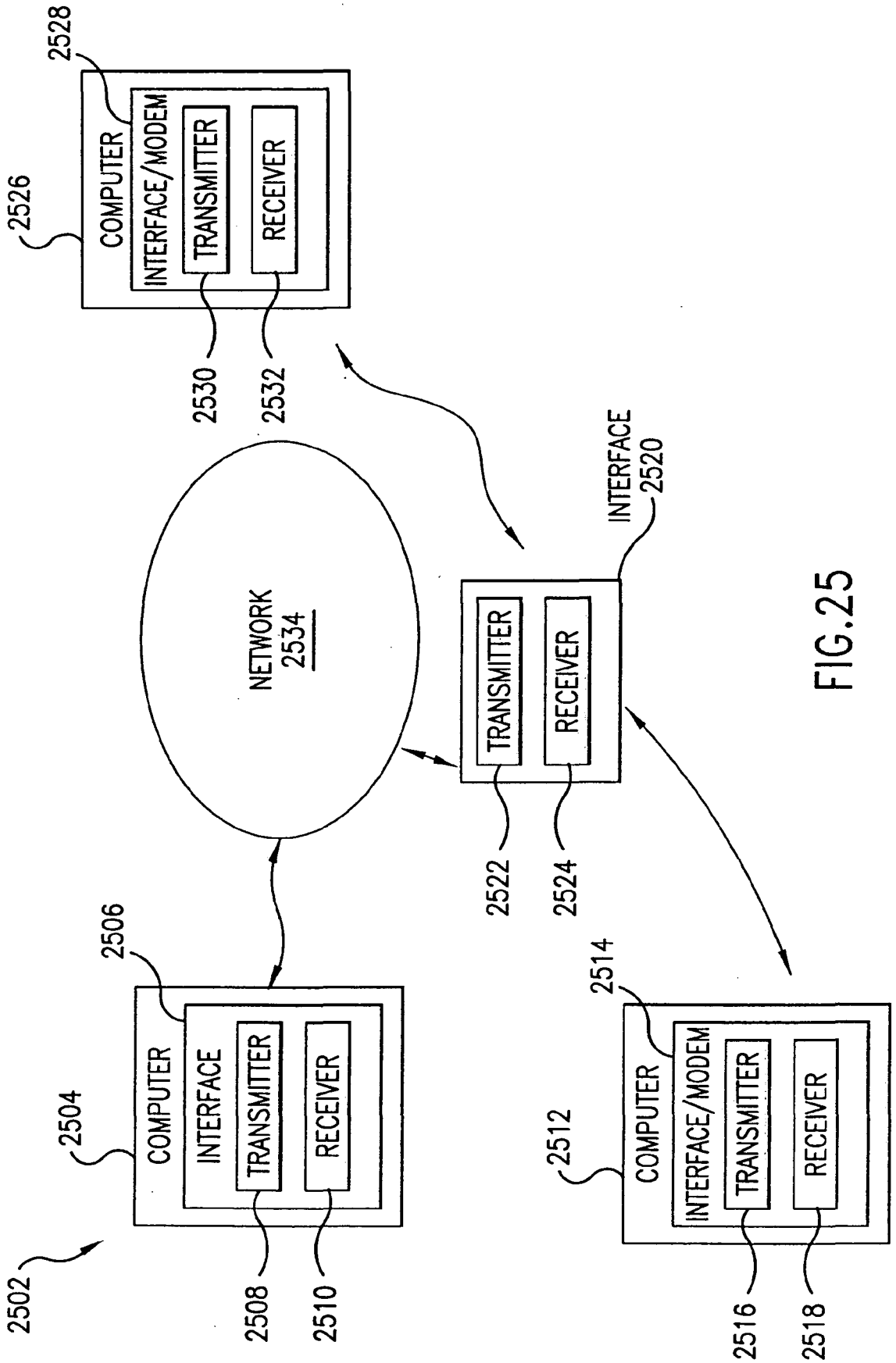
2528
COMPUTER
INTERFACE/MODEM
TRANSMITTER
RECEIVER
2526
2530
2532
NETWORK
2534
INTERFACE
2520
TRANSMITTER
RECEIVER
2522
2524
2506
COMPUTER
INTERFACE
TRANSMITTER
RECEIVER
2504
2508
2510
2502
2514
COMPUTER
INTERFACE/MODEM
TRANSMITTER
RECEIVER
2512
2516
2518

FIG.25

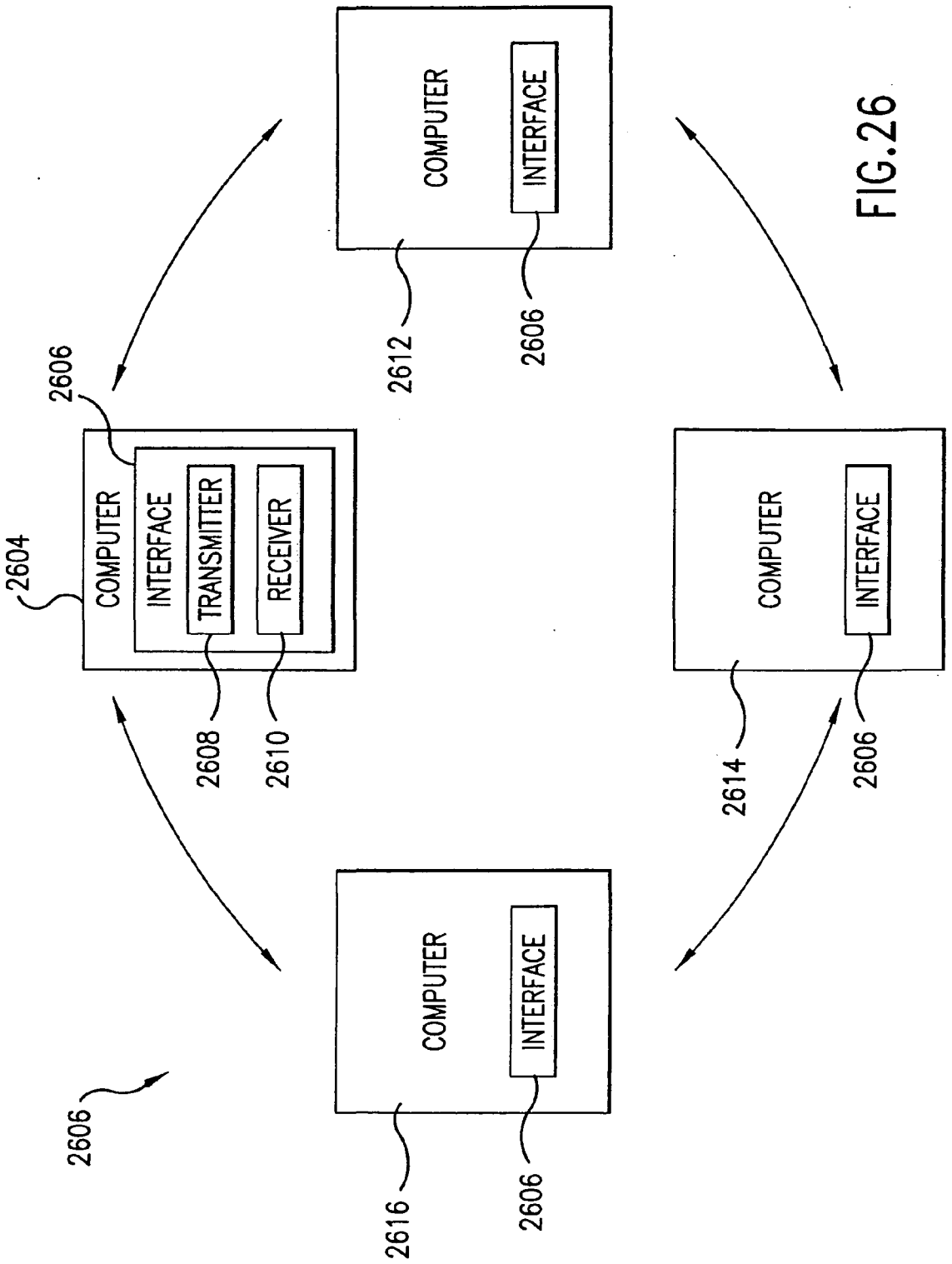
2606
2604
COMPUTER
INTERFACE
TRANSMITTER
RECEIVER
2608
2610
2612
COMPUTER
INTERFACE
2606
2614
COMPUTER
INTERFACE
2606
2616
COMPUTER
INTERFACE
2606

FIG.26

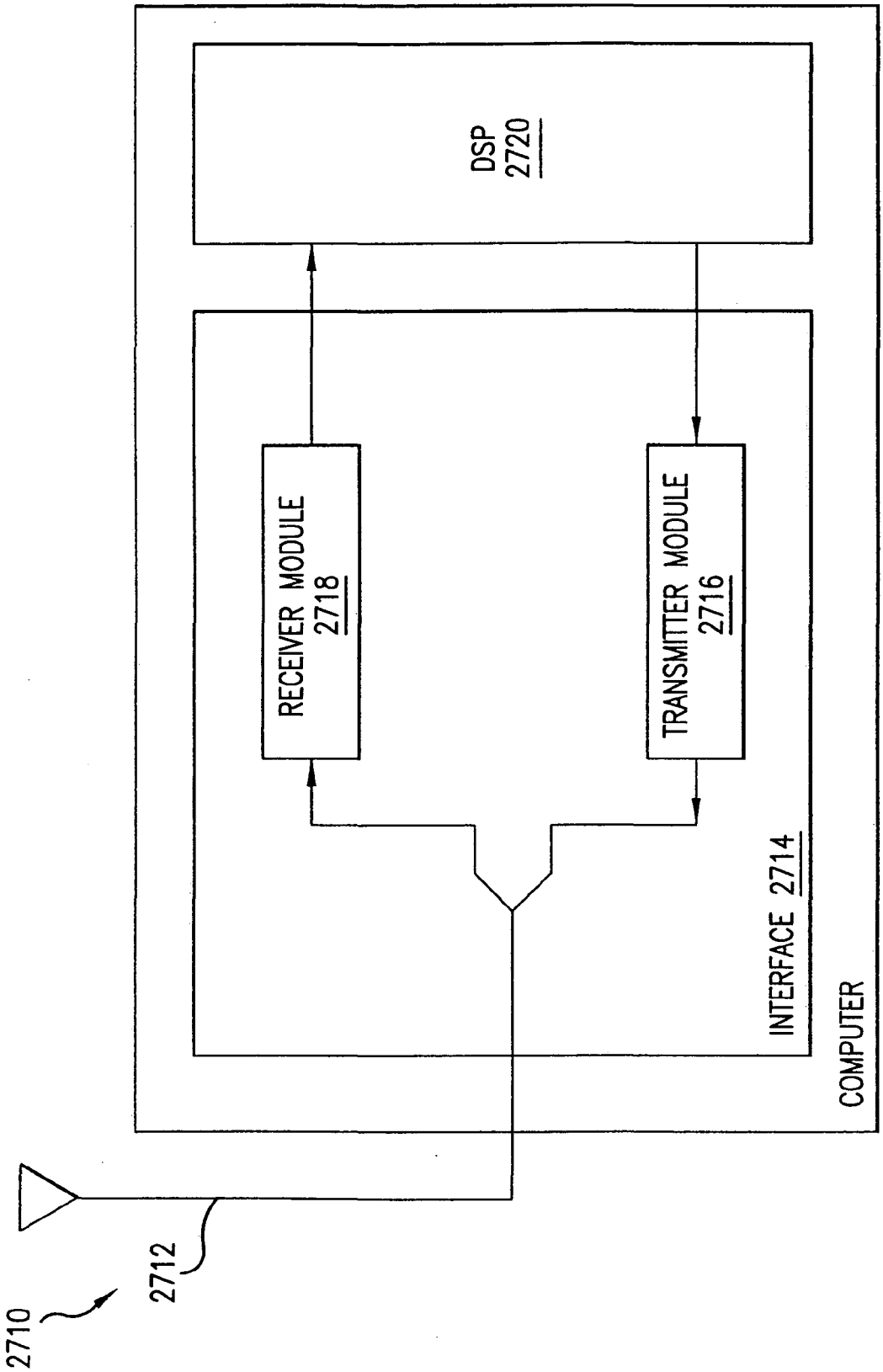
DSP
2720
RECEIVER MODULE
2718
TRANSMITTER MODULE
2716
INTERFACE 2714
COMPUTER
2712
2710

FIG.27

FIG.28

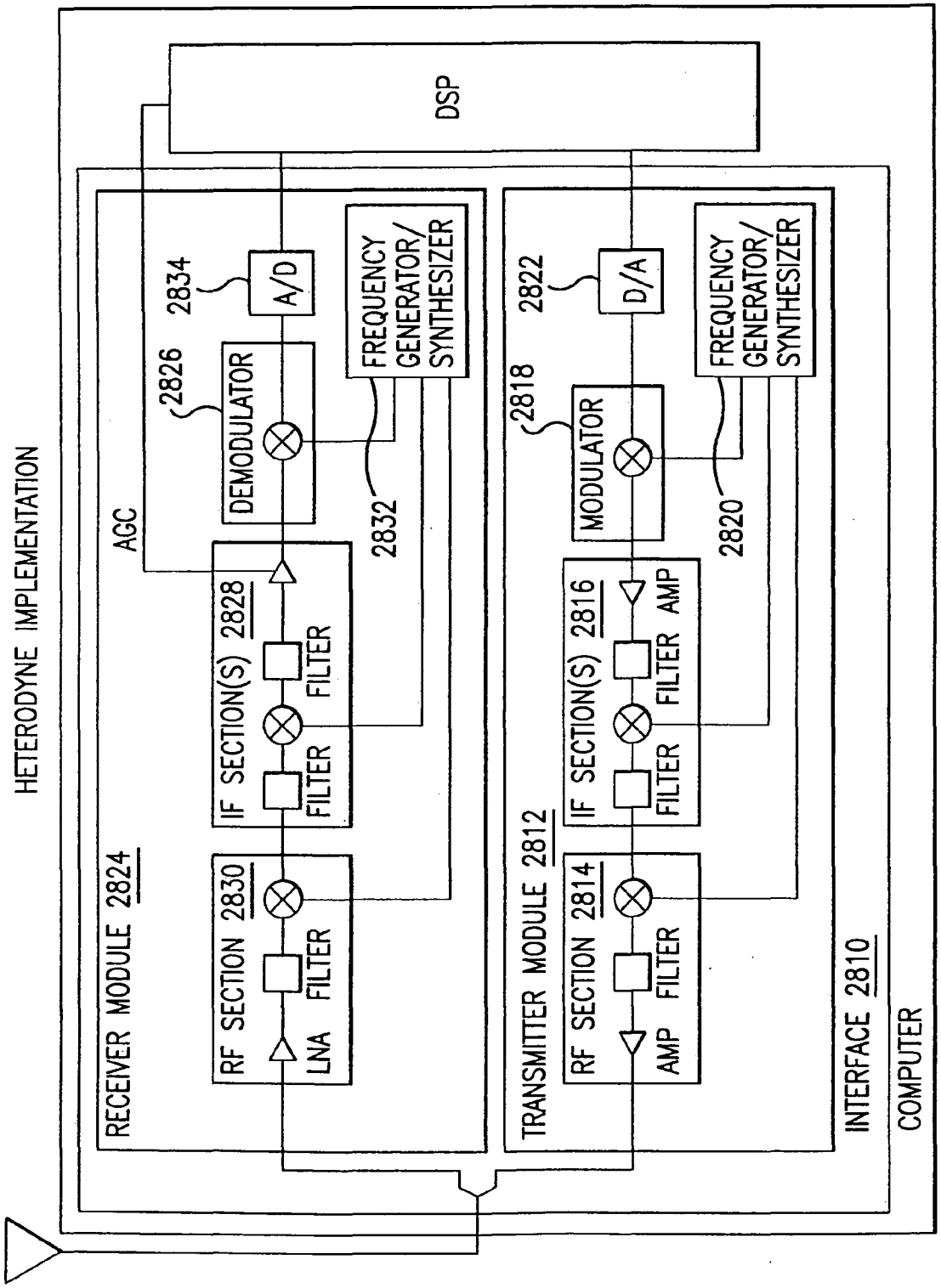
HETERODYNE IMPLEMENTATION
DSP
RECEIVER MODULE 2824
AGC
2834
A/D
2826
DEMODULATOR
FREQUENCY GENERATOR/ SYNTHESIZER
2832
IF SECTION(S) 2828
FILTER
FILTER
RF SECTION 2830
LNA
FILTER
TRANSMITTER MODULE 2812
2822
D/A
2818
MODULATOR
FREQUENCY GENERATOR/ SYNTHESIZER
2820
IF SECTION(S) 2816
FILTER
AMP
FILTER
RF SECTION 2814
AMP
FILTER
INTERFACE 2810
COMPUTER

FIG.29

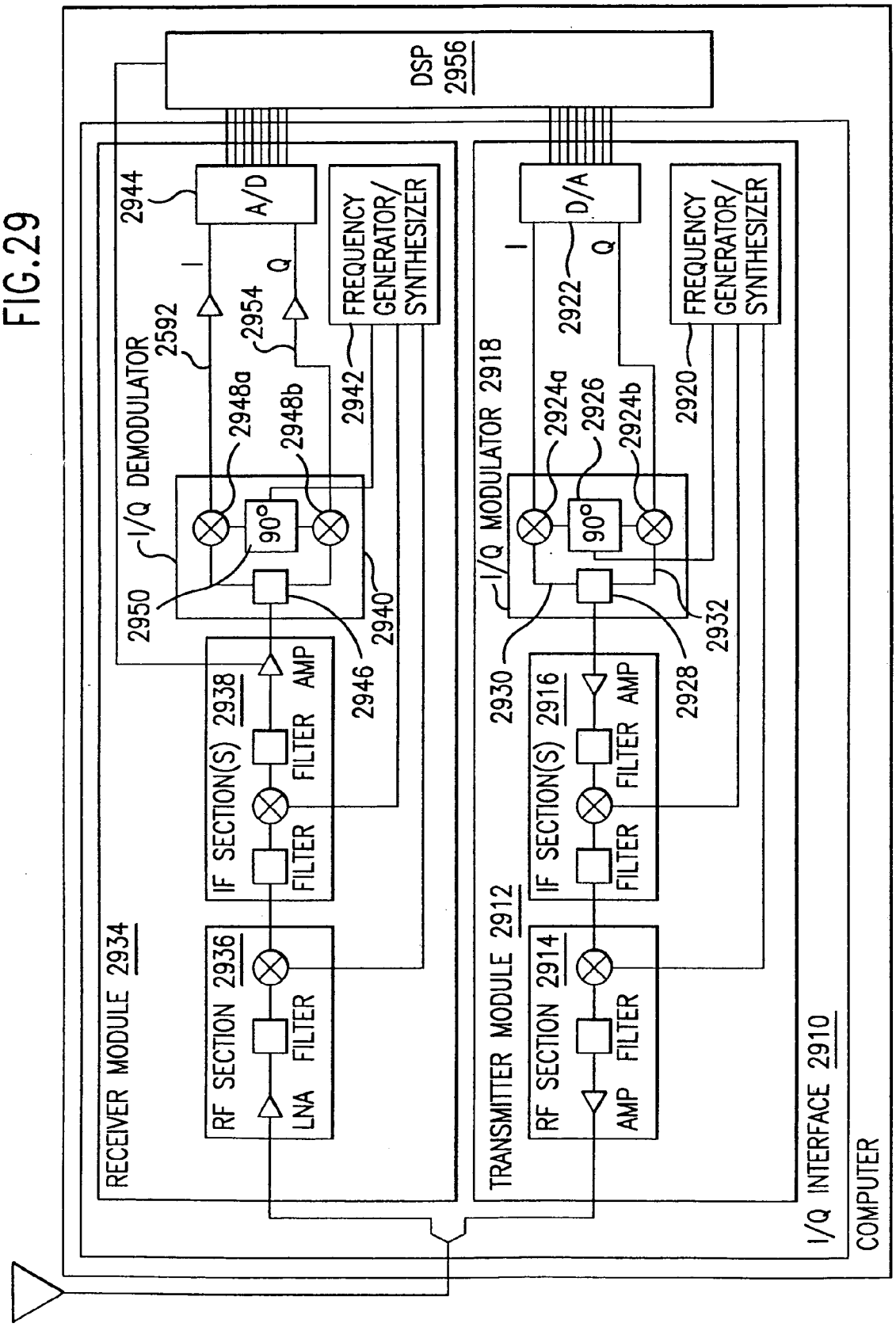
DSP 2956
RECEIVER MODULE 2934
RF SECTION 2936
LNA
FILTER
IF SECTION(S) 2938
FILTER
FILTER
AMP
I/Q DEMODULATOR
2592
2954
2944
A/D
I
Q
FREQUENCY GENERATOR/ SYNTHESIZER
2942
2948a
2948b
90°
2950
2940
2946
TRANSMITTER MODULE 2912
RF SECTION 2914
AMP
FILTER
IF SECTION(S) 2916
FILTER
FILTER
AMP
I/Q MODULATOR 2918
2924a
2926
2924b
90°
2930
2928
2932
2922
D/A
I
Q
FREQUENCY GENERATOR/ SYNTHESIZER
2920
I/Q INTERFACE 2910
COMPUTER

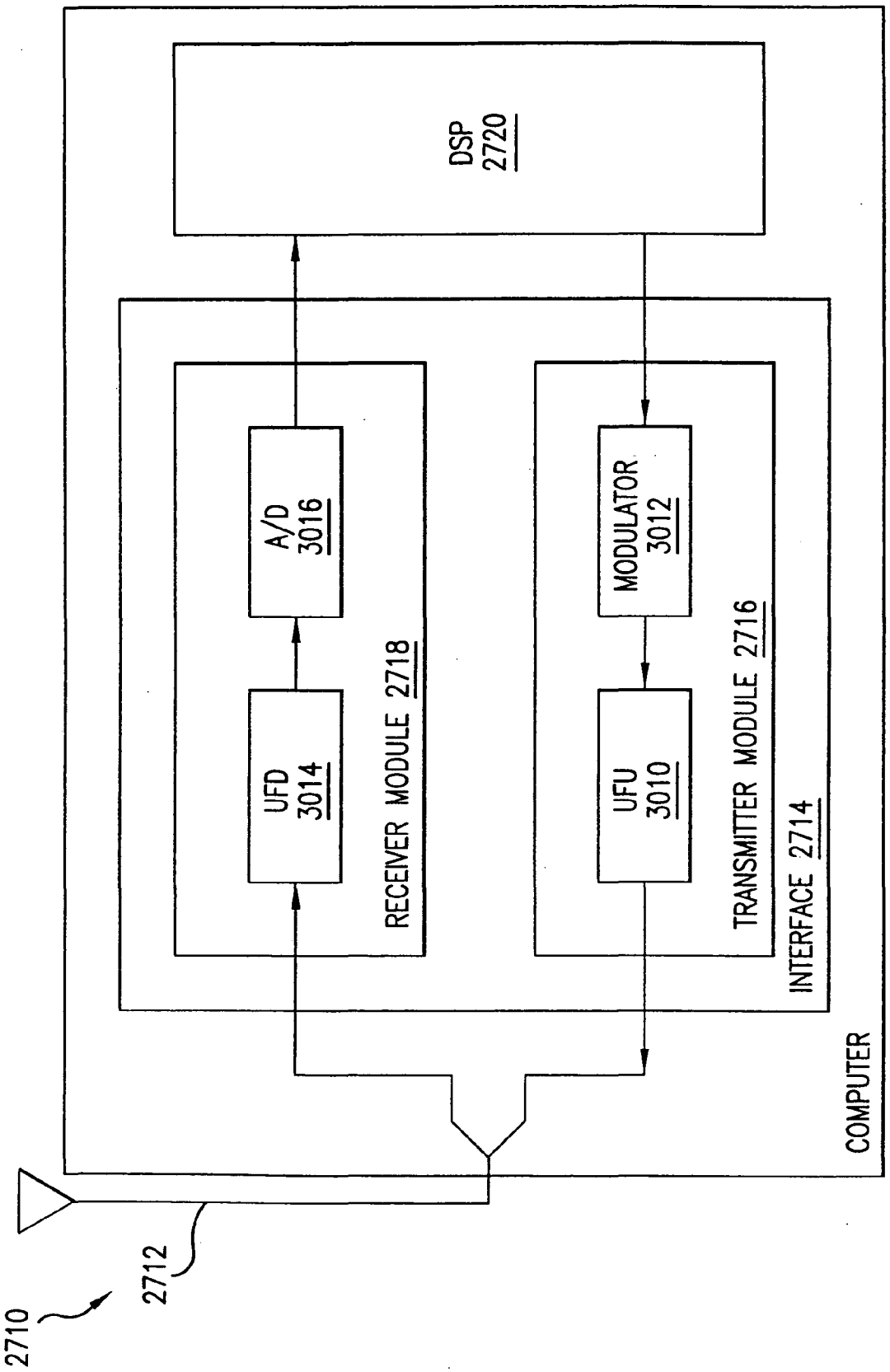
DSP
2720
A/D
3016
UFD
3014
RECEIVER MODULE 2718
MODULATOR
3012
UFU
3010
TRANSMITTER MODULE 2716
INTERFACE 2714
COMPUTER
2712
2710

FIG.30

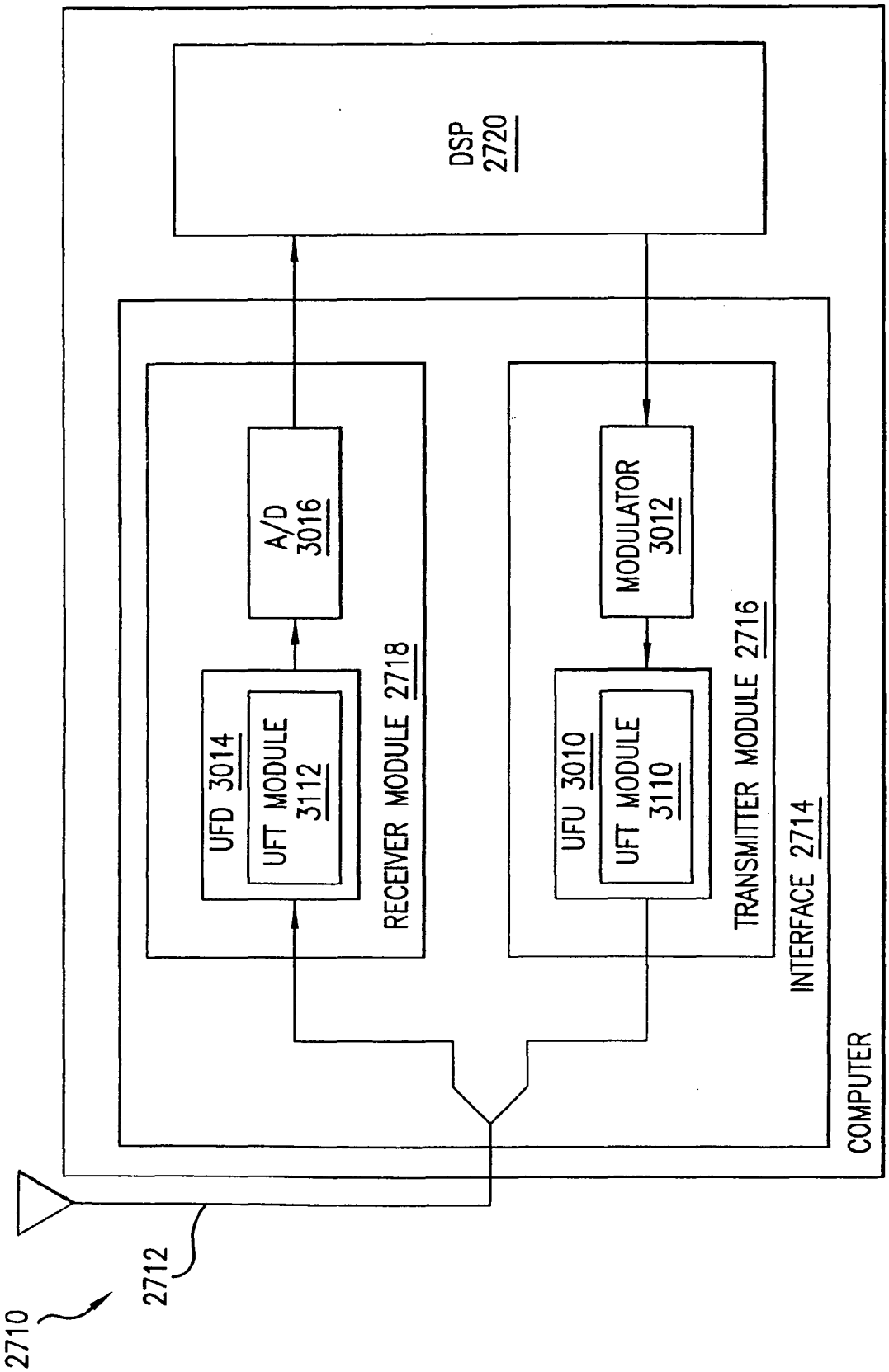
DSP
2720
A/D
3016
UFD 3014
UFT MODULE
3112
RECEIVER MODULE 2718
MODULATOR
3012
UFU 3010
UFT MODULE
3110
TRANSMITTER MODULE 2716
INTERFACE 2714
COMPUTER
2712
2710

FIG.31

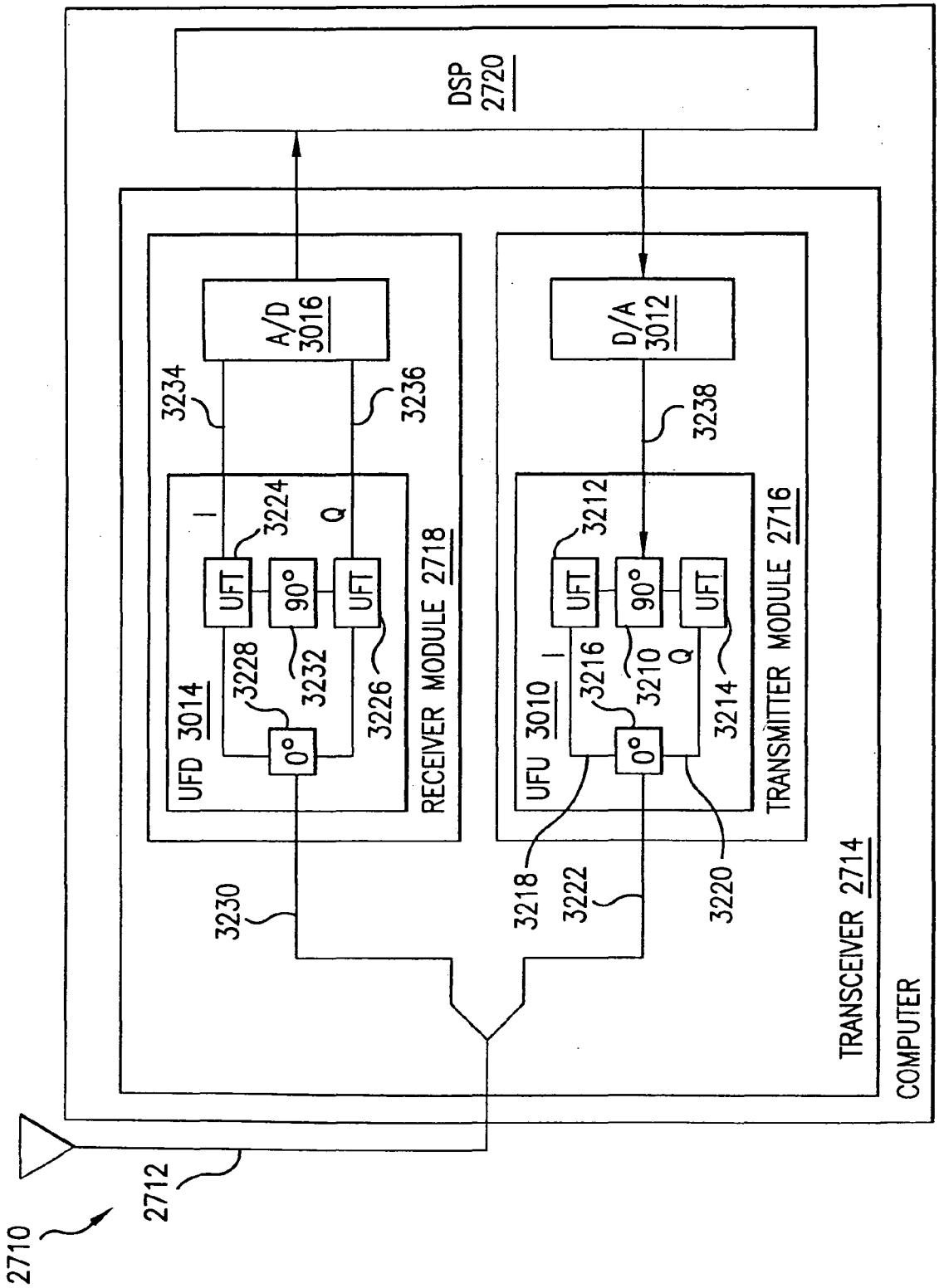
DSP
2720
A/D
3016
D/A
3012
3234
3236
3238
UFD 3014
UFT
90°
UFT
0°
I
Q
3224
3228
3232
3226
RECEIVER MODULE 2718
UFU 3010
UFT
90°
UFT
0°
I
Q
3212
3216
3210
3214
TRANSMITTER MODULE 2716
3230
3218
3222
3220
TRANSCEIVER 2714
COMPUTER
2712
2710

FIG.32

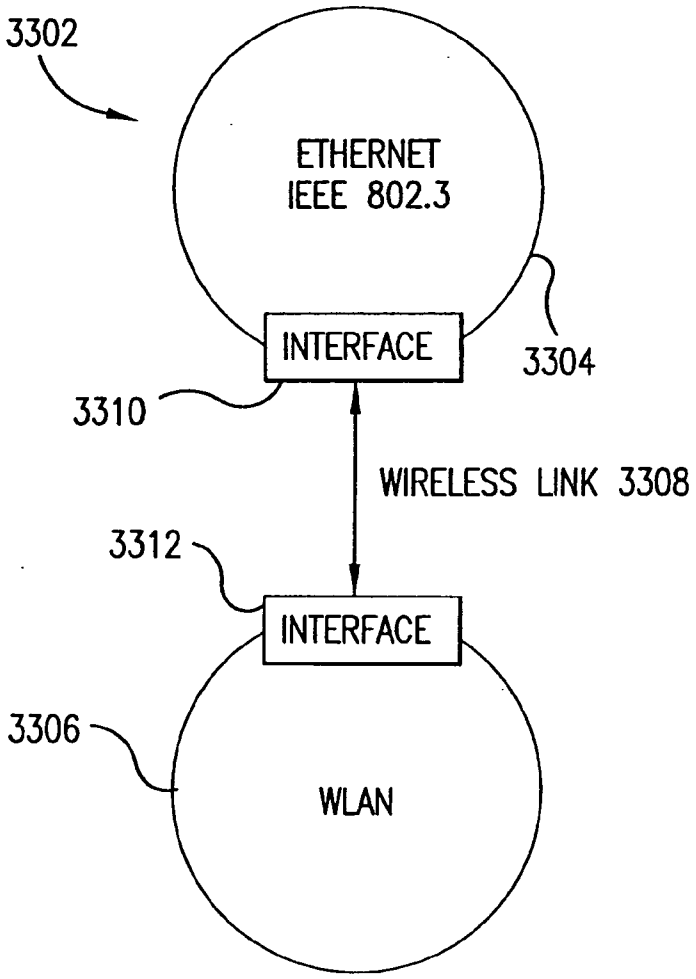
3302
ETHERNET
IEEE 802.3
INTERFACE
3304
3310
WIRELESS LINK 3308
3312
INTERFACE
3306
WLAN

FIG.33

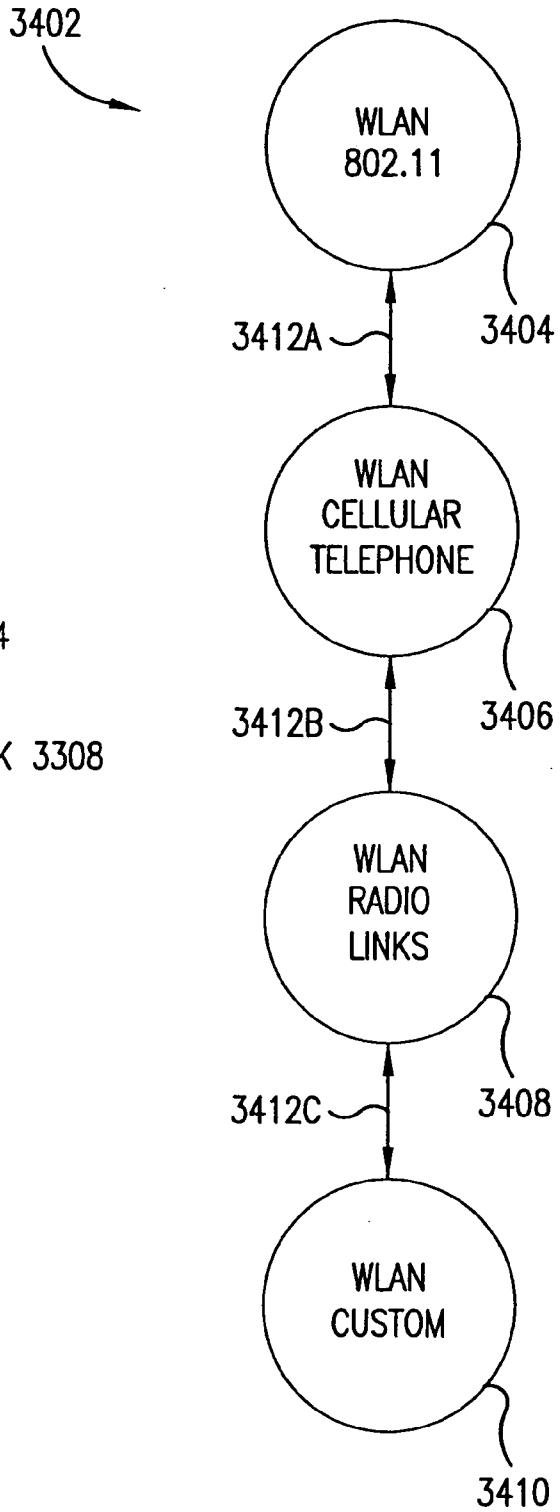
3402
WLAN
802.11
3404
3412A
WLAN
CELLULAR
TELEPHONE
3406
3412B
WLAN
RADIO
LINKS
3408
3412C
WLAN
CUSTOM
3410

FIG.34

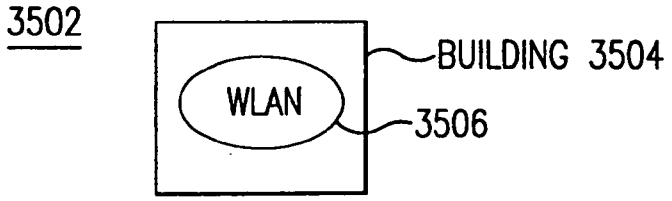

FIG.35

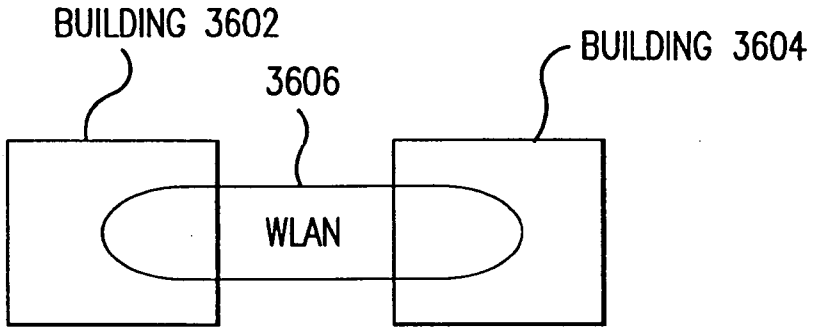

FIG.36

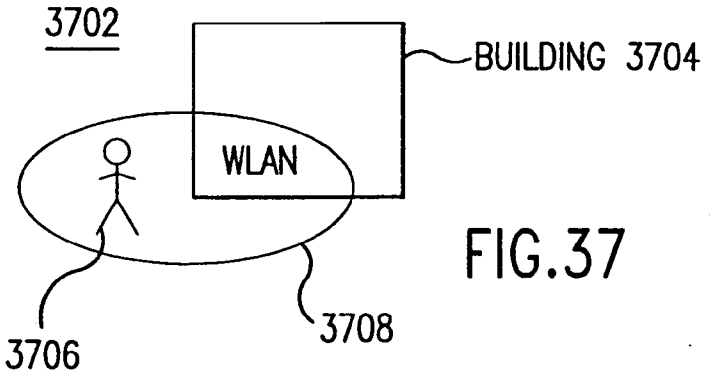

FIG.37

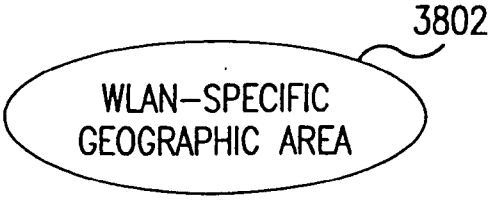

FIG.38

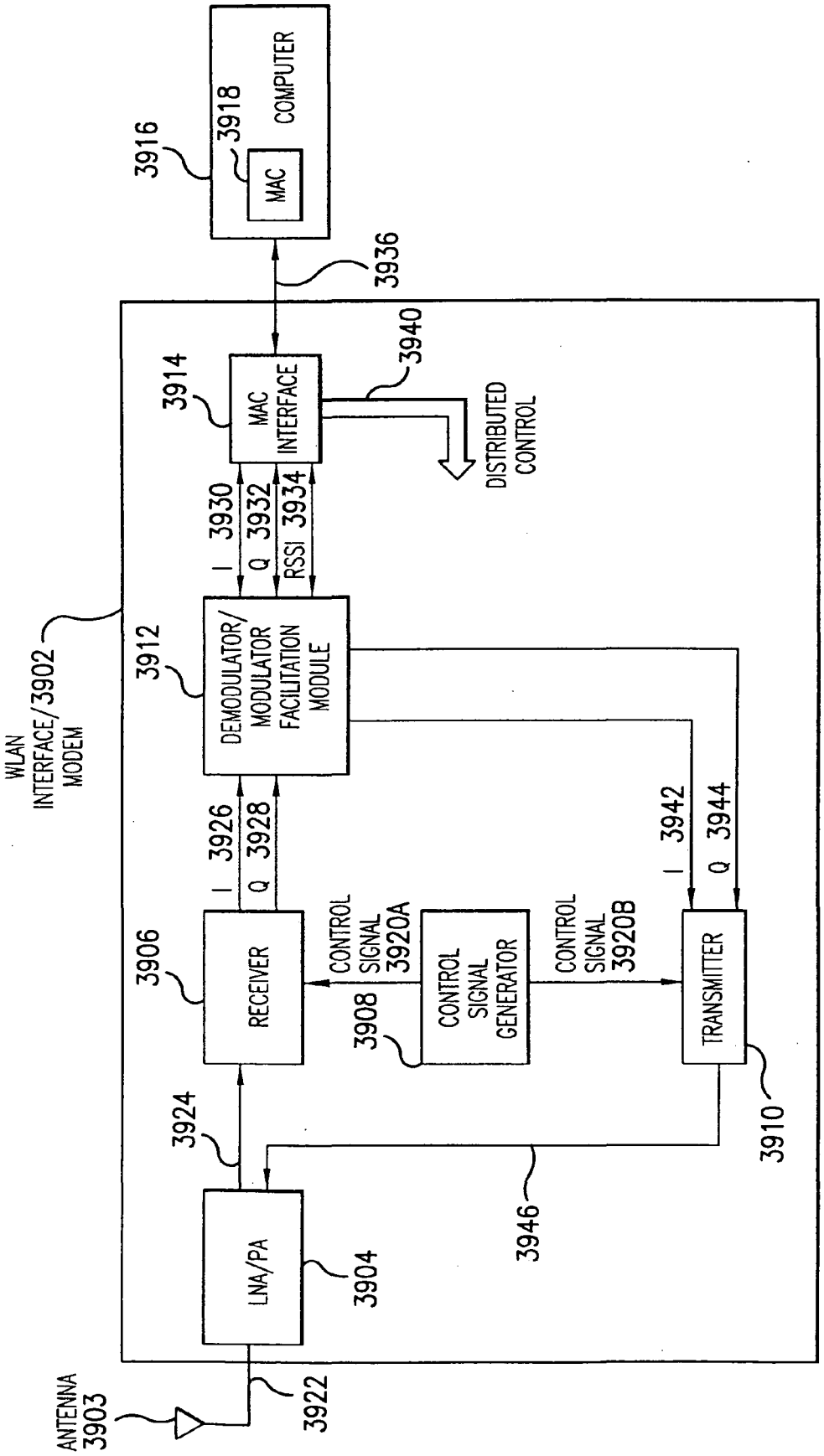
COMPUTER
MAC
3916
3918
3936
MAC INTERFACE
3914
3940
DISTRIBUTED CONTROL
I 3930
Q 3932
RSSI 3934
WLAN INTERFACE/3902 MODEM
DEMODULATOR/ MODULATOR FACILITATION MODULE
3912
I 3926
Q 3928
I 3942
Q 3944
RECEIVER
3906
CONTROL SIGNAL 3920A
CONTROL SIGNAL GENERATOR
3908
CONTROL SIGNAL 3920B
TRANSMITTER
3910
3924
3946
LNA/PA
3904
ANTENNA 3903
3922

FIG.39

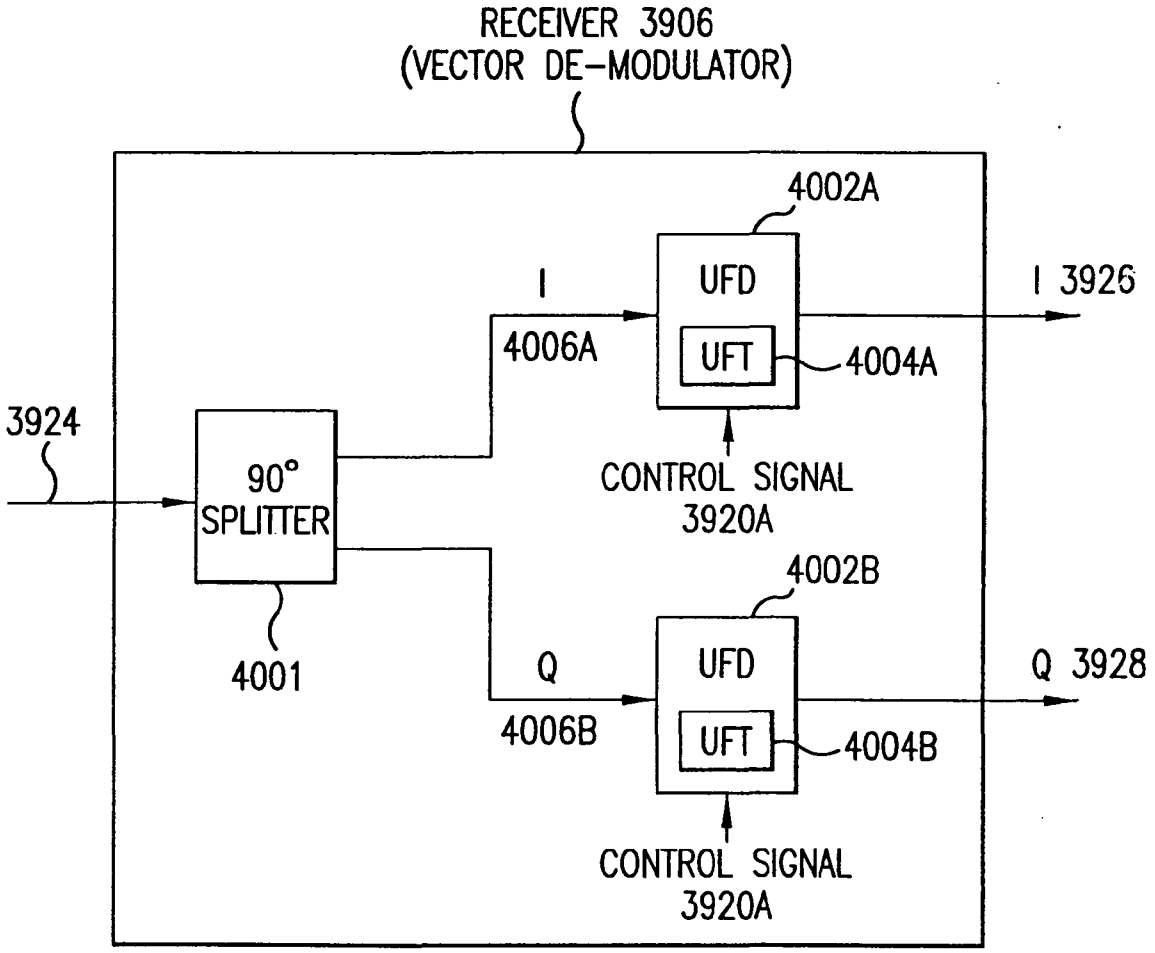
RECEIVER 3906
(VECTOR DE-MODULATOR)
4002A
UFD
UFT
4004A
I
4006A
I 3926
3924
90°
SPLITTER
4001
CONTROL SIGNAL
3920A
4002B
UFD
UFT
4004B
Q
4006B
Q 3928
CONTROL SIGNAL
3920A

FIG.40

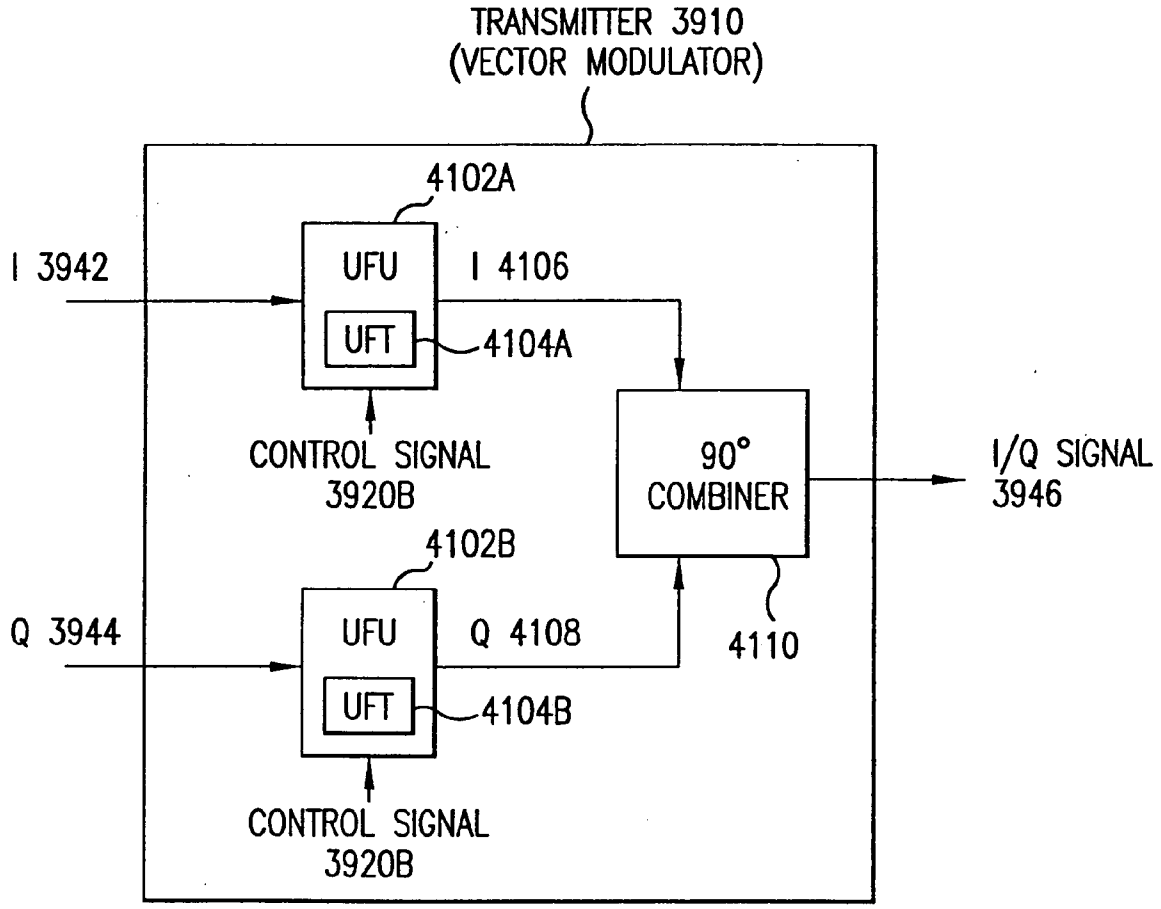
TRANSMITTER 3910
(VECTOR MODULATOR)
4102A
I 3942
UFU
I 4106
UFT
4104A
CONTROL SIGNAL
3920B
90°
COMBINER
I/Q SIGNAL
3946
4102B
Q 3944
UFU
Q 4108
4110
UFT
4104B
CONTROL SIGNAL
3920B

FIG.41

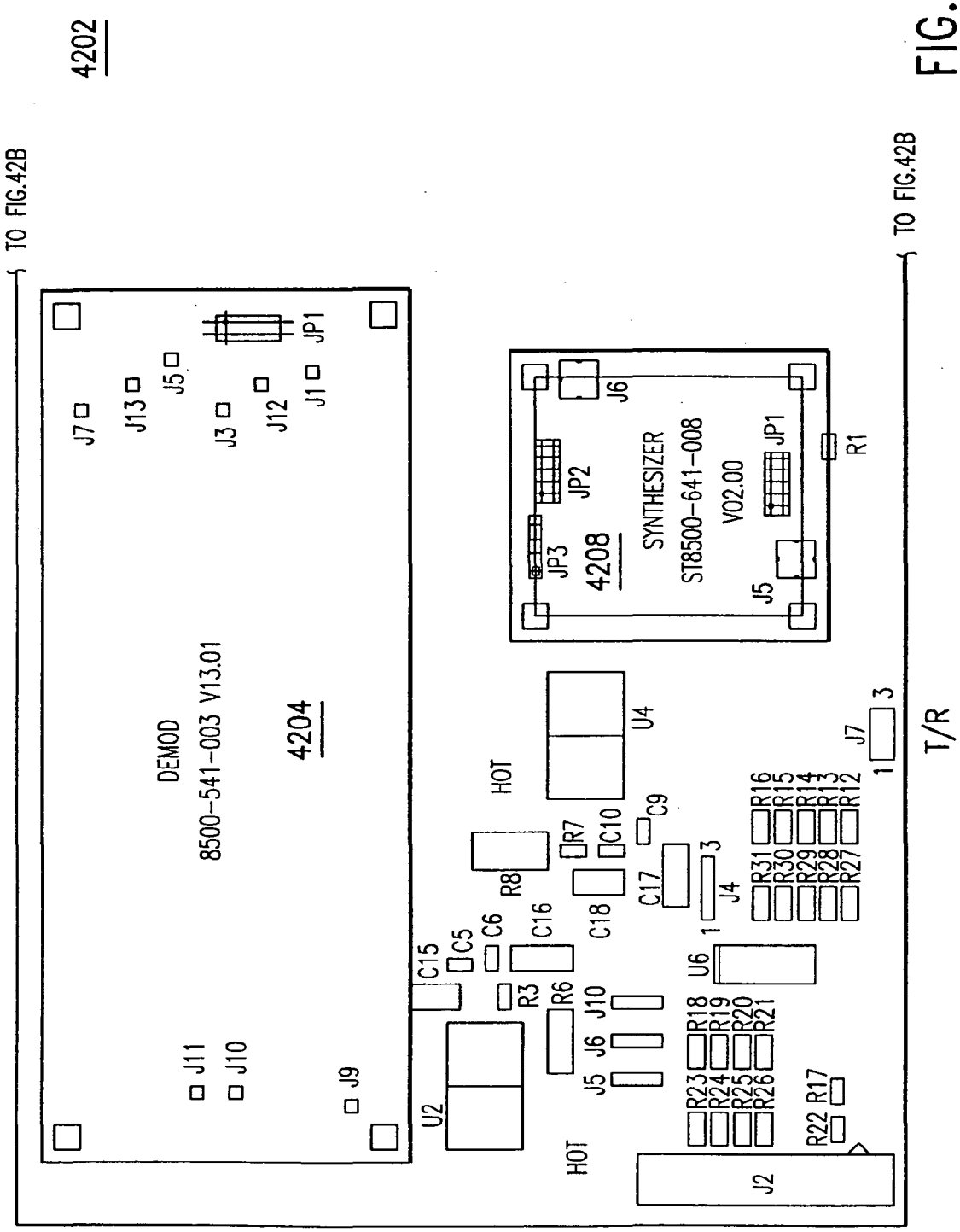
4202
TO FIG.42B
TO FIG.42B
DEMOD
8500-541-003 V13.01
4204
J7
J13
J5
J3
J12
J1
JP1
J11
J10
J9
U2
HOT
HOT
R3
R6
R8
R7
C10
C9
C15
C5
C6
C16
C18
C17
J4
U4
U6
J10
J6
J5
R18
R19
R20
R21
R23
R24
R25
R26
R22
R17
J2
R31
R30
R29
R28
R27
R16
R15
R14
R13
R12
J7
T/R
4208
SYNTHESIZER
ST8500-641-008
V02.00
JP3
JP2
JP1
J6
J5
R1

FIG.42A

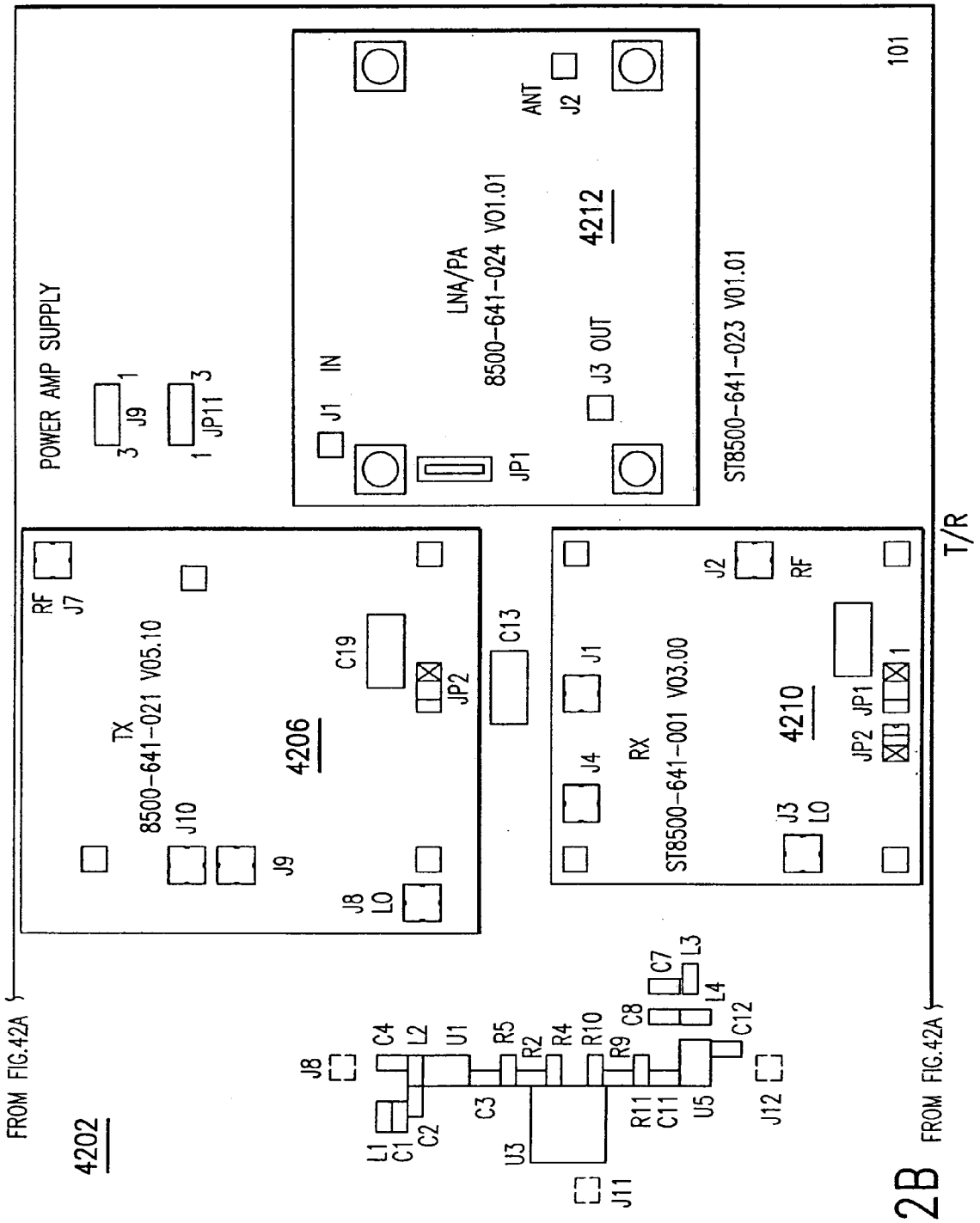
POWER AMP SUPPLY
J9
JP11
J1 IN
JP1
LNA/PA
8500-641-024 V01.01
4212
J3 OUT
ANT
J2
ST8500-641-023 V01.01
101
RF
J7
TX
8500-641-021 V05.10
J10
J9
J8
LO
4206
C19
JP2
C13
J1
J4
RX
ST8500-641-001 V03.00
J3
LO
4210
J2
RF
JP2
JP1
T/R
FROM FIG.42A
4202
J8
C4
L2
U1
R5
R2
R4
R10
R9
C8
C7
L3
L4
C12
L1
C1
C2
C3
U3
R11
C11
U5
J12
J11
FROM FIG.42A

FIG.42B

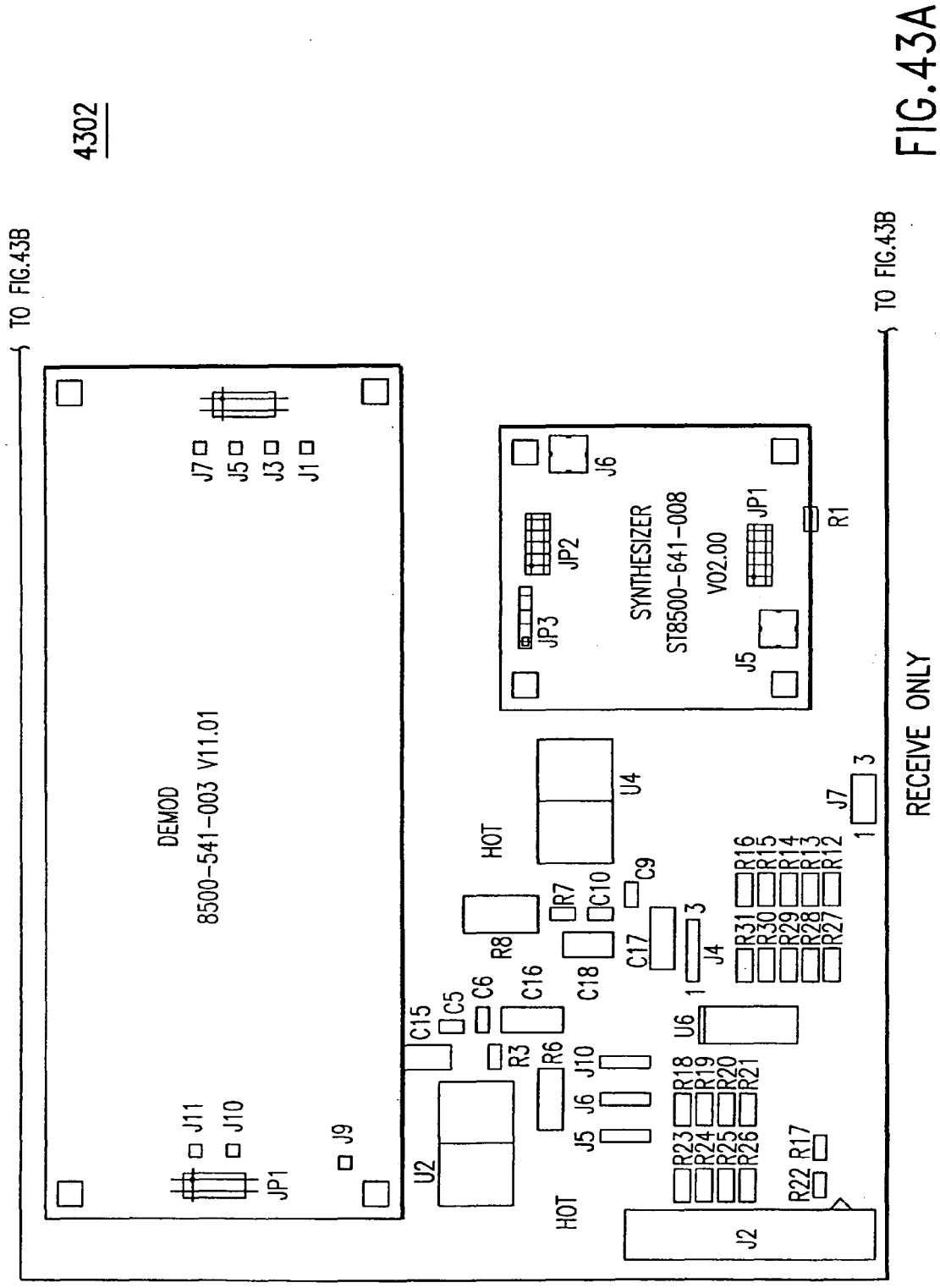
4302
TO FIG.43B
TO FIG.43B
DEMOD
8500-541-003 V11.01
SYNTHESIZER
ST8500-641-008
V02.00
HOT
HOT
RECEIVE ONLY
J1
J3
J5
J7
J9
J10
J11
JP1
J2
J4
J5
J6
J7
J10
U2
U4
U6
C5
C6
C9
C10
C15
C16
C17
C18
R1
R3
R6
R7
R8
R12
R13
R14
R15
R16
R17
R18
R19
R20
R21
R22
R23
R24
R25
R26
R27
R28
R29
R30
R31
JP1
JP2
JP3

FIG.43A

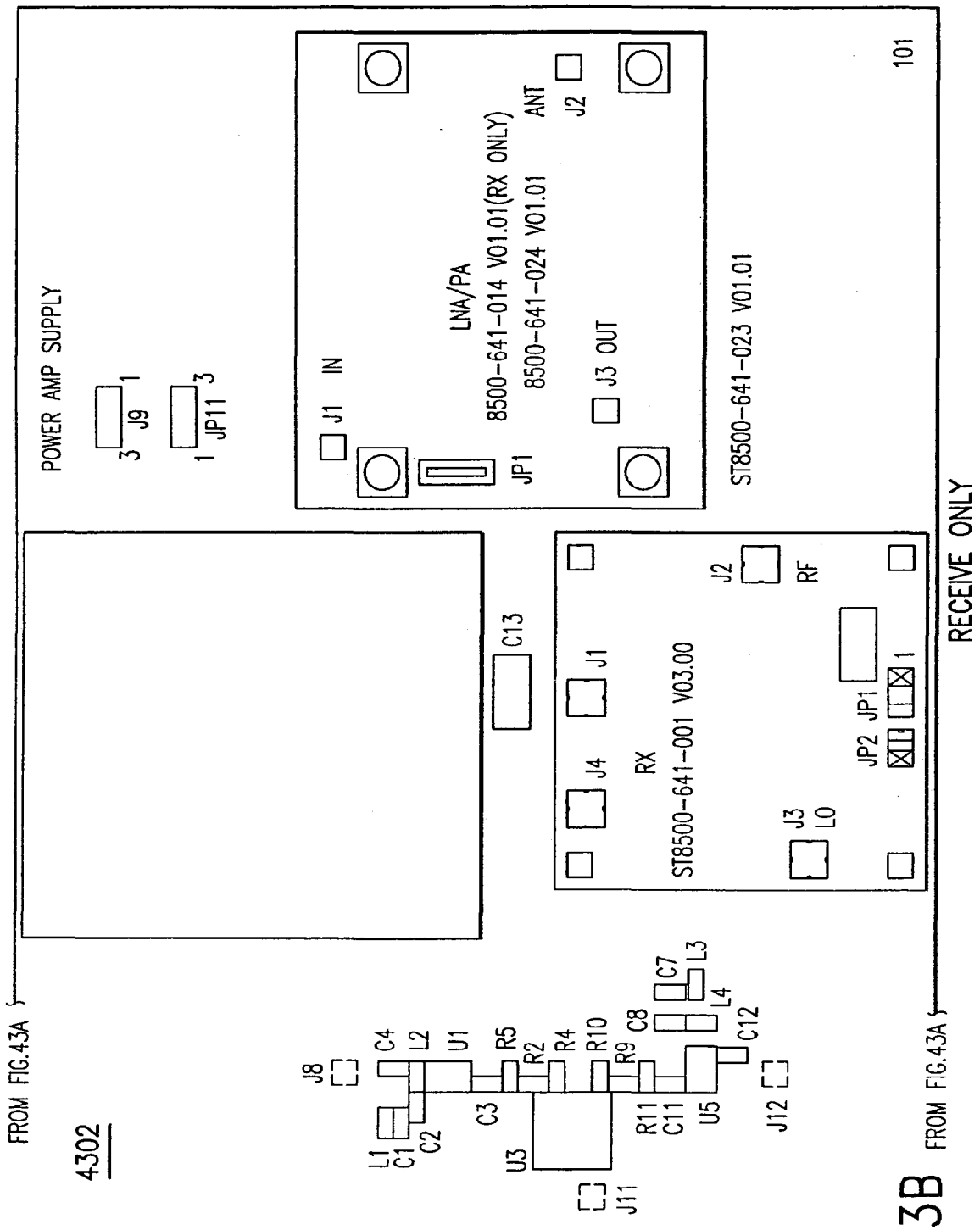
POWER AMP SUPPLY
J9
JP11
J1 IN
LNA/PA
8500-641-014 V01.01(RX ONLY)
8500-641-024 V01.01
ANT
J2
J3 OUT
JP1
ST8500-641-023 V01.01
101
C13
J1
J4
RX
ST8500-641-001 V03.00
J2
RF
JP1
JP2
J3
LO
RECEIVE ONLY
FROM FIG.43A
4302
J8
C4
L2
U1
R5
R2
R4
R10
R9
C8
C7
L3
L4
C12
L1
C1
C2
C3
U3
R11
C11
U5
J12
J11
FROM FIG.43A

FIG.43B

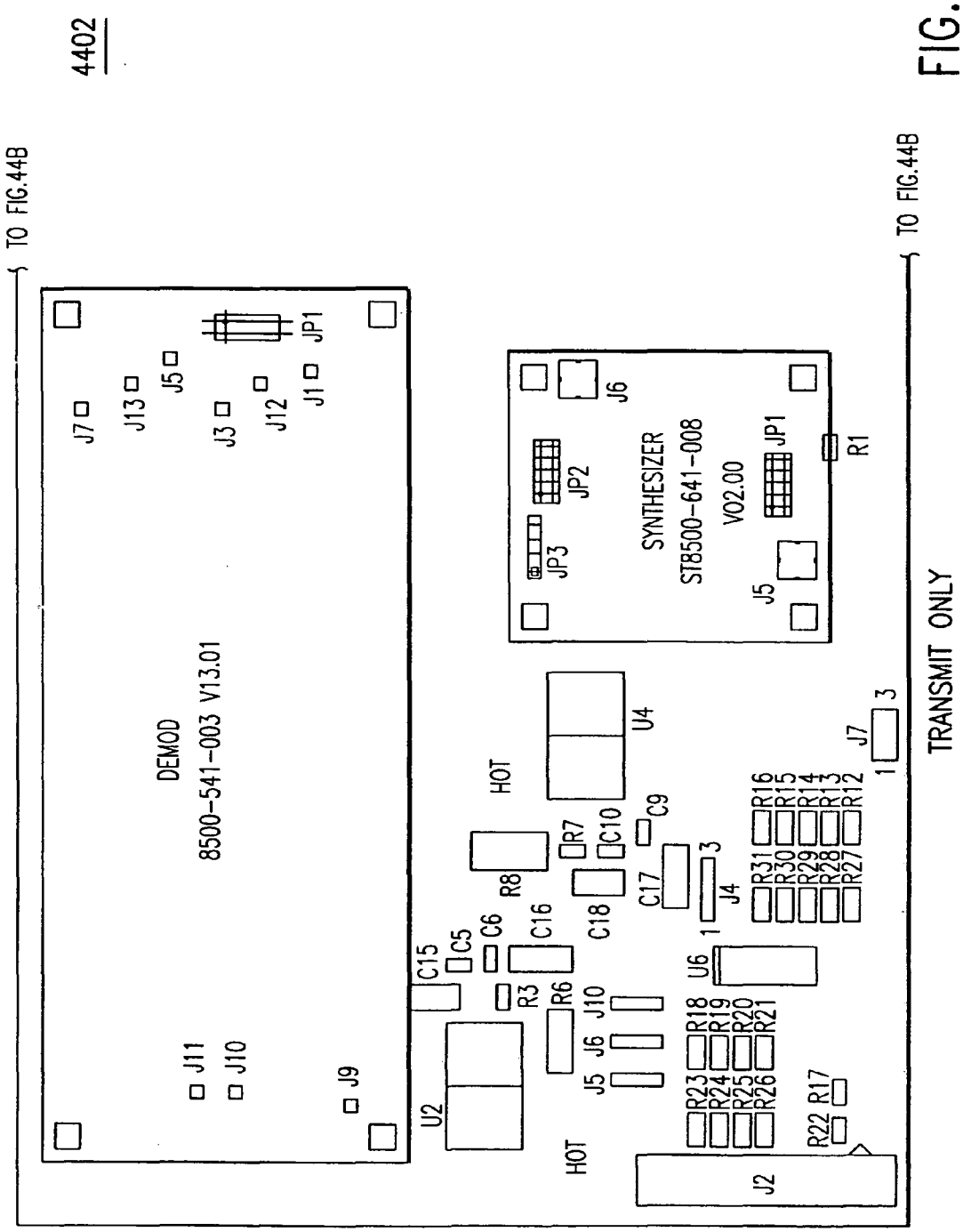
4402
TO FIG.44B
TO FIG.44B
DEMOD
8500-541-003 V13.01
SYNTHESIZER
ST8500-641-008
V02.00
TRANSMIT ONLY
HOT
HOT
J1
J2
J3
J4
J5
J6
J7
J9
J10
J11
J12
J13
JP1
JP2
JP3
R1
R3
R6
R7
R8
R12
R13
R14
R15
R16
R17
R18
R19
R20
R21
R22
R23
R24
R25
R26
R27
R28
R29
R30
R31
C5
C6
C9
C10
C15
C16
C17
C18
U2
U4
U6

FIG.44A

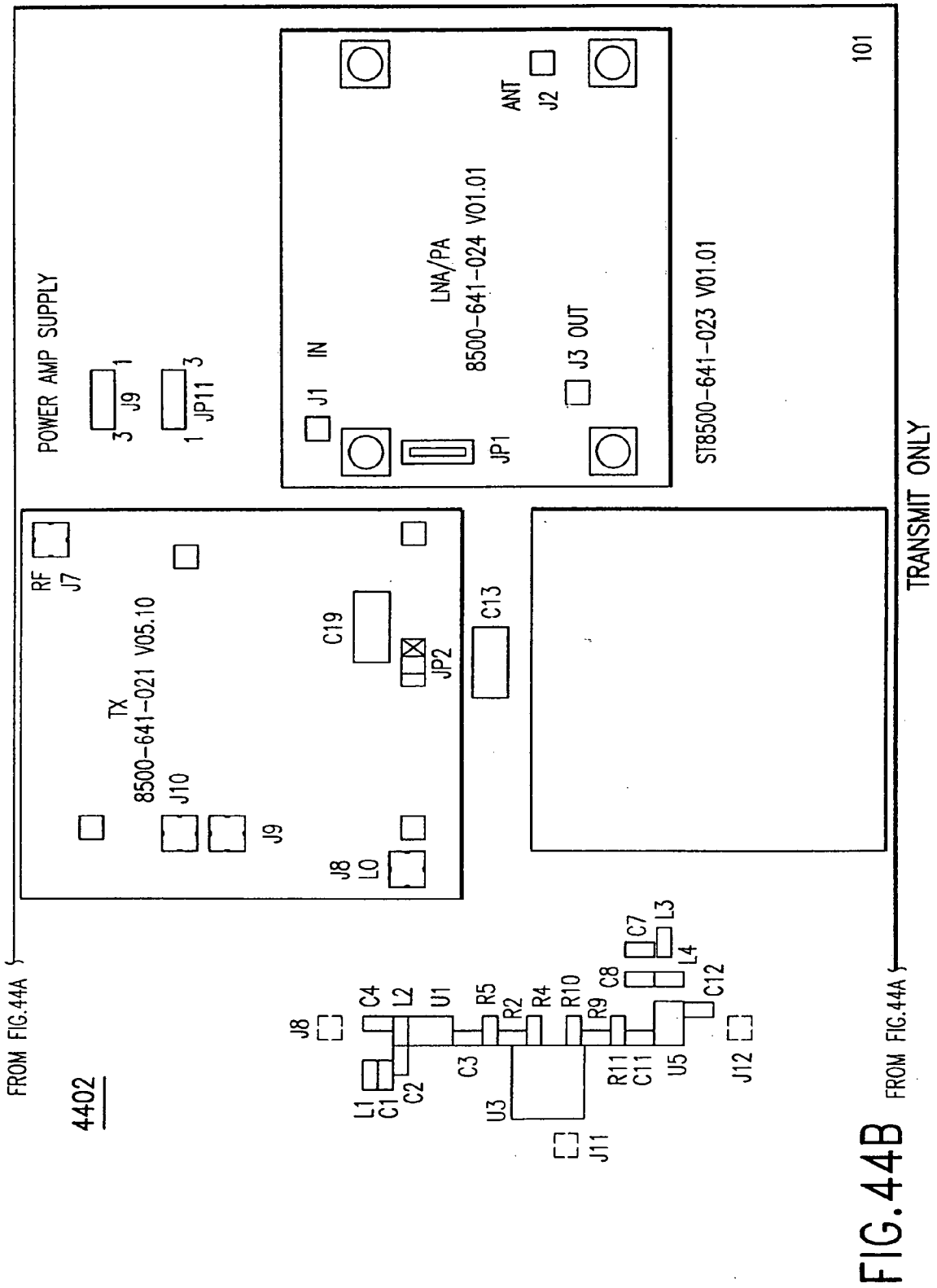
FROM FIG.44A
4402
POWER AMP SUPPLY
J9
JP11
J1 IN
JP1
LNA/PA
8500-641-024 V01.01
J3 OUT
ANT
J2
ST8500-641-023 V01.01
101
RF
J7
TX
8500-641-021 V05.10
J10
J9
J8
LO
C19
JP2
C13
TRANSMIT ONLY
J8
C4
L2
U1
R5
R2
R4
R10
R9
C8
C7
L3
L4
C12
L1
C1
C2
C3
U3
R11
C11
U5
J12
J11
FROM FIG.44A

FIG.44B

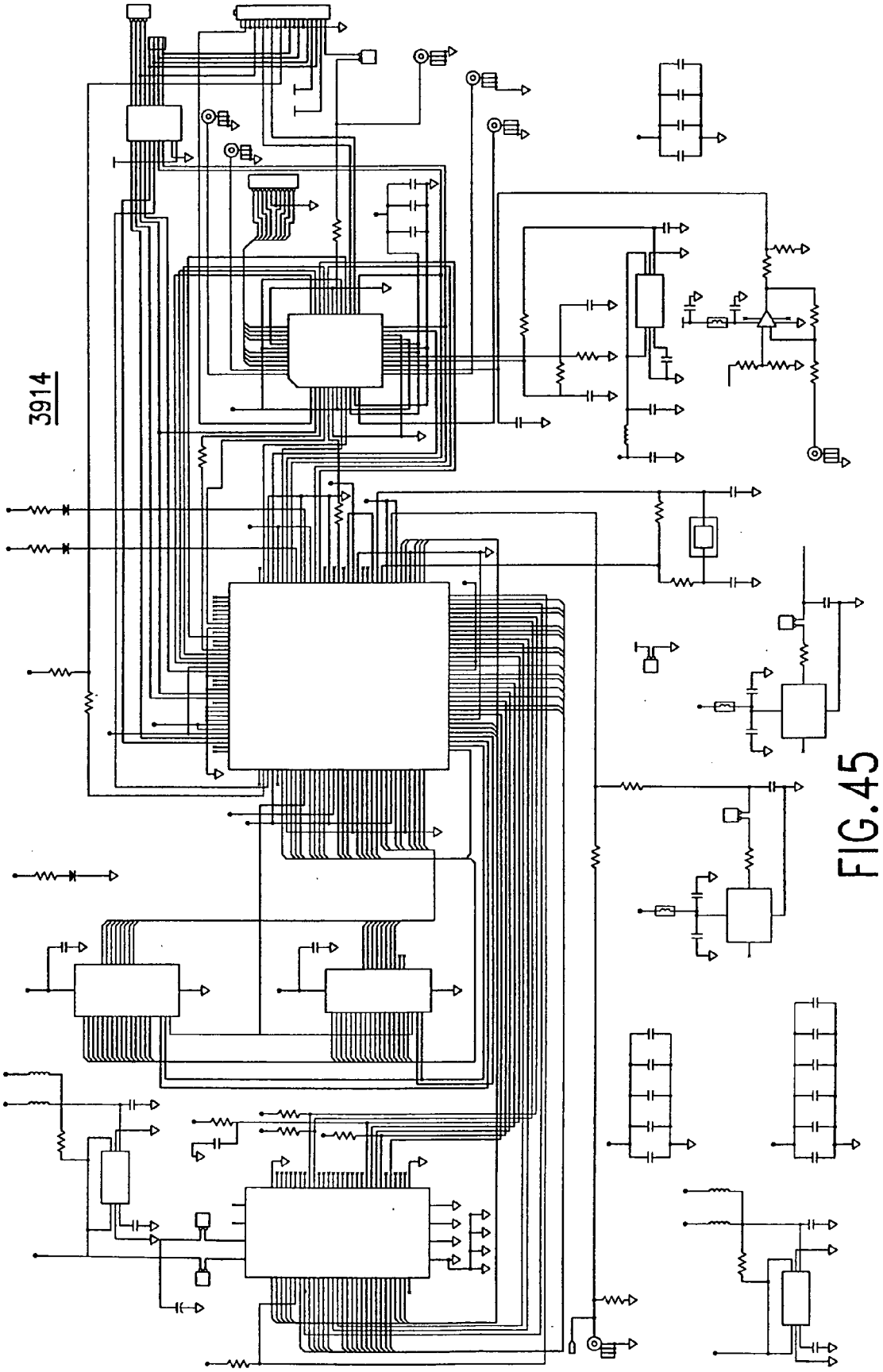

FIG.45

Item	Quantity	Reference	Part Description	Part Number	Manufacturer
1	1	C123	10uF CAP 6032, TANTALUM,20%	TAJT106K010R	KEMET
2	3	C263, C273, C275, C282	4.7uF CAP 6032, TANTALUM,20%	T491A475M006AS	KEMET
3	25	C120, C125, C126, C127, C128, C136, C137, C138, C139, C140, C141, C142, C143, C144, C145, C147, C148, C149, C264, C272, C274, C279, C280, C281, C283	0.1uF CAP 0603,X7R,10%	GRM39X7R104K050AD	MURATA
4	3	C146, C269, C276	.01uF CAP 0603,X7R,10%	GRM39X7R103K050AD	MURATA
5	5	C124, C132, C133, C271, C278	100pF CAP 0603,X7R,10%	GRM39C0G101K050AD	MURATA
6	1	C129	47pF CAP 0603,X7R,10%	GRM39C0G470J100AD	MURATA
7	2	C270, C277	27pF CAP 0603,X7R,10%	GRM39C0G270K050AD	MURATA
8	1	C130	22pF CAP 0603,X7R,10%	GRM39C0G220K050AD	MURATA
9	1	C131	10pF CAP 0603,X7R,10%	GMR39C0G100D050AD	MURATA
10	1	DS1	LED GREEN	597-3311-420	DIALIGHT
11	1	DS2	LED YELLOW	597-3401-420	DIALIGHT
12	1	DS3	LED RED	597-3111-420	DIALIGHT
13	6	JP12, JP13, JP14, JP15, JP16, JP17	CONNECTOR HEADER 2PIN	2MS-19-33-01	SPECIALITY ELECTRONICS
14	1	JP11	CONNECTOR HEADER 4PIN	100/VH/TM1SQ/W.100/4	BLKCON

FIG.46A

15	7	J16, J20, J21, J22, J23, J24, J25	CONNECTOR 82MMCX	82MMCX-50-0-1	HUBER/SHUNER
16	1	J18	CONNECTOR HEADER 10	TMS-110-01-G-S	SAMTEC
17	1	J19	CONNECTOR WITH EJECTOR	EHT-1-10-01-S-D	SAMTEC
18	1	P1	CONNECTOR 34X2PCMCIA	DICMJ-68S-SPC-M08	ITT CANON
19	7	L59, L60, L61, L63, L64, L65, L66	FERRITE BEAD	BLM11A121S	MURATA
20					
21	1	R112	10M, RESISTOR,0603,5%		
22	1	R114	390K, RESISTOR,0603,5%	ERJ-3GSYJ394V	PANASONIC
23	1	R105	100K, RESISTOR,0603,5%	ERJ-3GSYJ104V	PANASONIC
24	4	R106, R107,R108, R111	15K, RESISTOR, 0603,5%	ERJ-3GSYJ153V	PANASONIC
25	1	R116	9.1K, RESISTOR, 0603,5%	ERJ-3GSYJ912V	PANASONIC
26	1	R115	8.2K, RESISTOR, 0603,5%	ERJ-3GSYJ822V	PANASONIC
27	1	R113	3.9K, RESISTOR, 0603,5%	ERJ-3GSYJ392V	PANASONIC
28	1	R101	750, RESISTOR, 0630,5%	ERJ-3GSYJ751V	PANASONIC
29	1	R110	560, RESISTOR, 0603,5%	ERJ-3GSYJ561V	PANASONIC
30	2	R99, R100	330, RESISTOR, 0603,5%	ERJ-3GSYJ331V	PANASONIC
31	1	R119	50, RESISTOR, 0603,5%	ERJ-3GSYJ500V	PANASONIC
32	2	R128, R129	10, RESISTOR, 0603,5%	ERJ-3GSYJ100V	PANASONIC
33	8	R102, R103, R104, R109, R117, R118, R120, R127,	0, RESISTOR, 0603,5%	RM732Z1J000ZT 3GSYJ000V	ERJ KOA PANASONIC
34	6	R121, R122, R123, R124, R125, R126	TBD, RESISTOR, 0603,5%	R	PANASONIC
35	1	U10	SRAM	KM62256DLTG-5L M5M5256CVP-55LL	SAMSUNG MITSUBUSHI
36	1	U12	MAC	AM79C930	AMD

FIG.46B

37	1	U13	BASEBAND PROCESSOR	HFA3842A1	HARRIS
38	1	U14	FLASH RAM	AM29F010-55EC	AMD
39	1	U15	32 KHz CRYSTAL	CX-6V-SM2-32.768KHzC/1	STATEK
40	2	U45	BUS BUFFER	DS3862	NATIONAL
41	1	U48	REGULATOR 3.5 V	TK11235BMC	TOKO
42	1	U49	22MHz OSCILLATOR	FOX F3346-22MHz	FOX
43	1	U50	2 VOLT REFERENCE	TK11220BMC	TOKO
44	1	U51	40MHz OSCILLATOR	CXO-M-10N-40MHz A/1	STATEK

FIG.46C

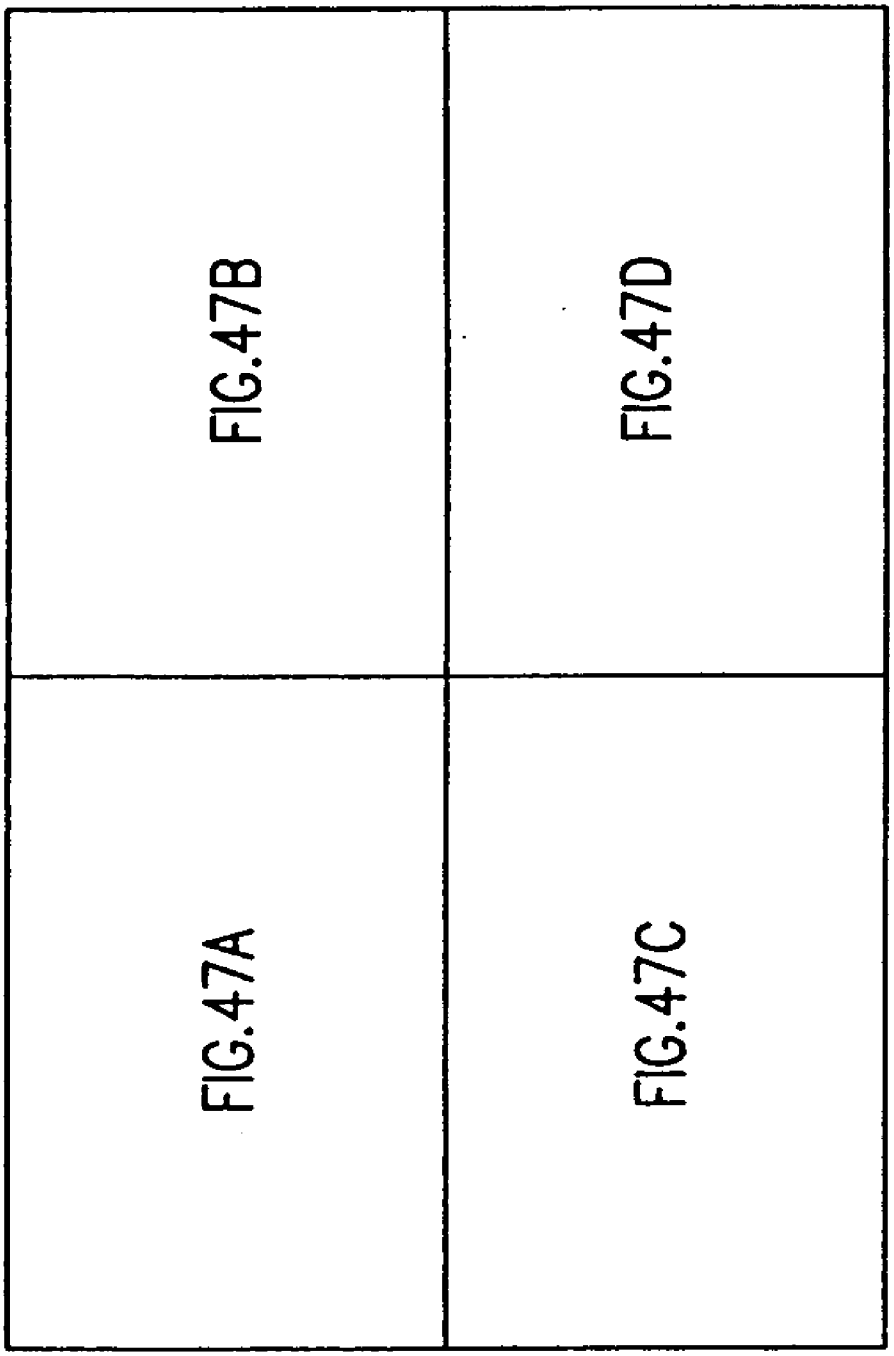

FIG. 47

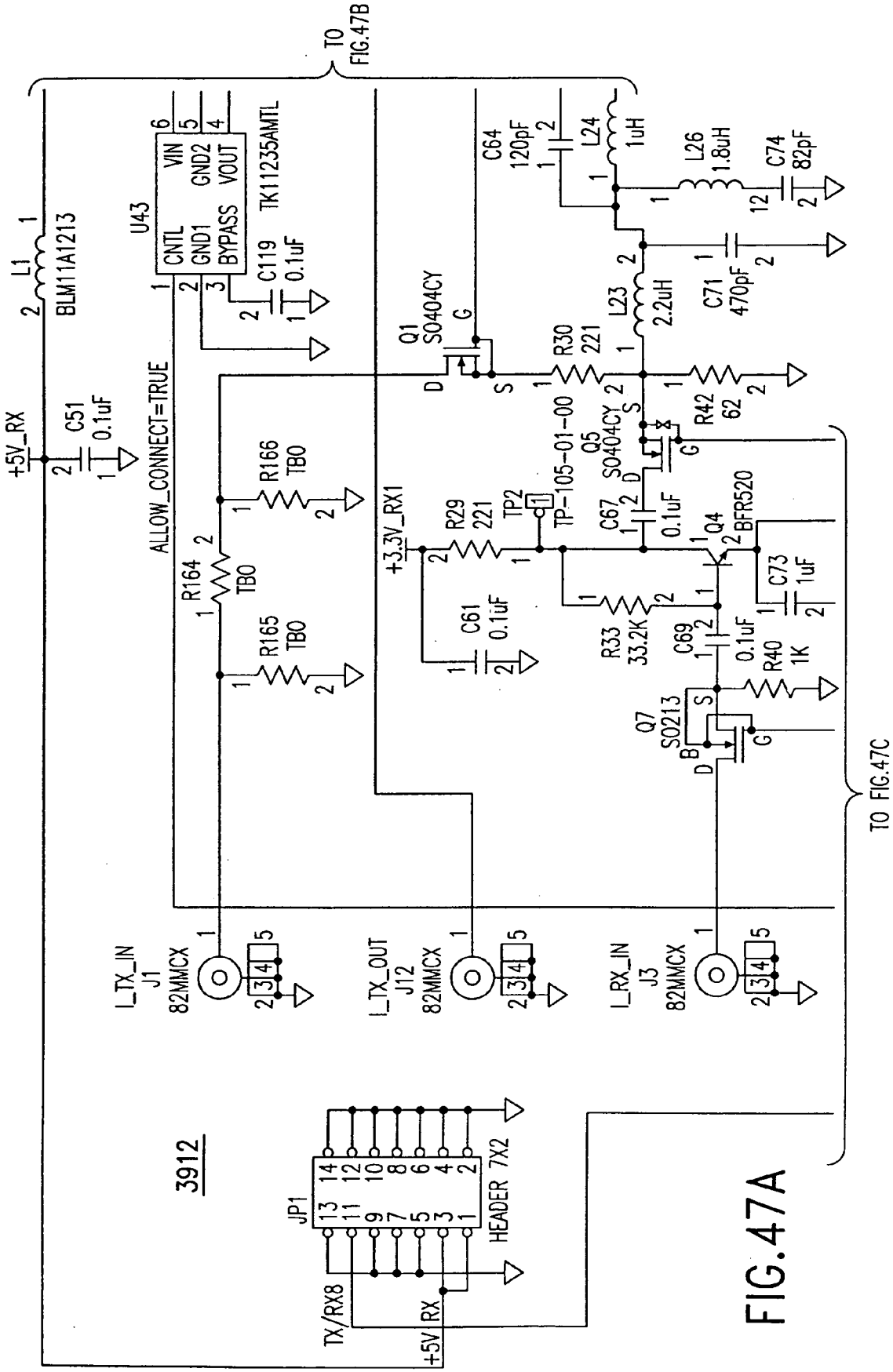
TO FIG.47B
U43
TK11235AMTL
CNTL
GND1
BYPASS
VIN
GND2
VOUT
C119
0.1uF
L1
BLM11A1213
+5V_RX
C51
0.1uF
ALLOW_CONNECT=TRUE
R166
TBO
R164
TBO
R165
TBO
Q1
SO404CY
C64
120pF
L24
1uH
L26
1.8uH
C74
82pF
C71
470pF
L23
2.2uH
R30
221
R42
62
Q5
SO404CY
TP-105-01-00
TP2
+3.3V_RX1
R29
221
C61
0.1uF
C67
0.1uF
Q4
BFR520
C73
1uF
R33
33.2K
C69
0.1uF
R40
1K
Q7
SO213
TO FIG.47C
I_TX_IN
J1
82MMCX
I_TX_OUT
J12
82MMCX
I_RX_IN
J3
82MMCX
3912
JP1
HEADER 7X2
TX/RX8
+5V
RX

FIG.47A

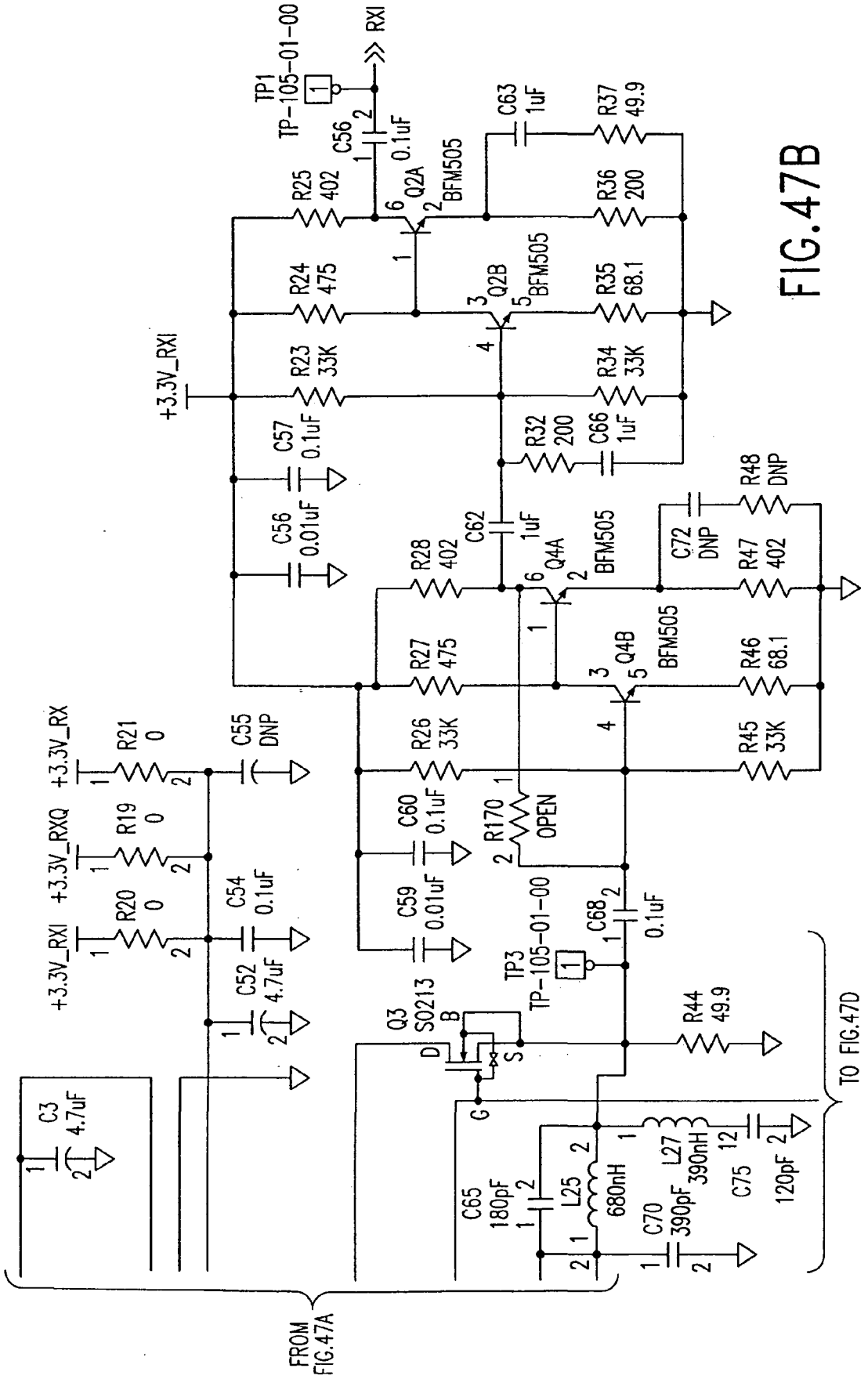
TP1
TP-105-01-00
RXI
C56
0.1uF
R25
402
Q2A
BFM505
C63
1uF
R37
49.9
R36
200
R24
475
Q2B
BFM505
R35
68.1
+3.3V_RXI
R23
33K
R34
33K
C57
0.1uF
R32
200
C66
1uF
C56
0.01uF
C62
1uF
R48
DNP
R28
402
Q4A
BFM505
C72
DNP
R47
402
R27
475
Q4B
BFM505
R46
68.1
+3.3V_RX
R21
0
C55
DNP
R26
33K
R45
33K
+3.3V_RXQ
R19
0
C60
0.1uF
R170
OPEN
+3.3V_RXI
R20
0
C54
0.1uF
C59
0.01uF
C68
0.1uF
C52
4.7uF
TP3
TP-105-01-00
Q3
S0213
R44
49.9
C3
4.7uF
C65
180pF
L25
680nH
L27
390nH
C70
390pF
C75
120pF
TO FIG.47D
FROM
FIG.47A

FIG.47B

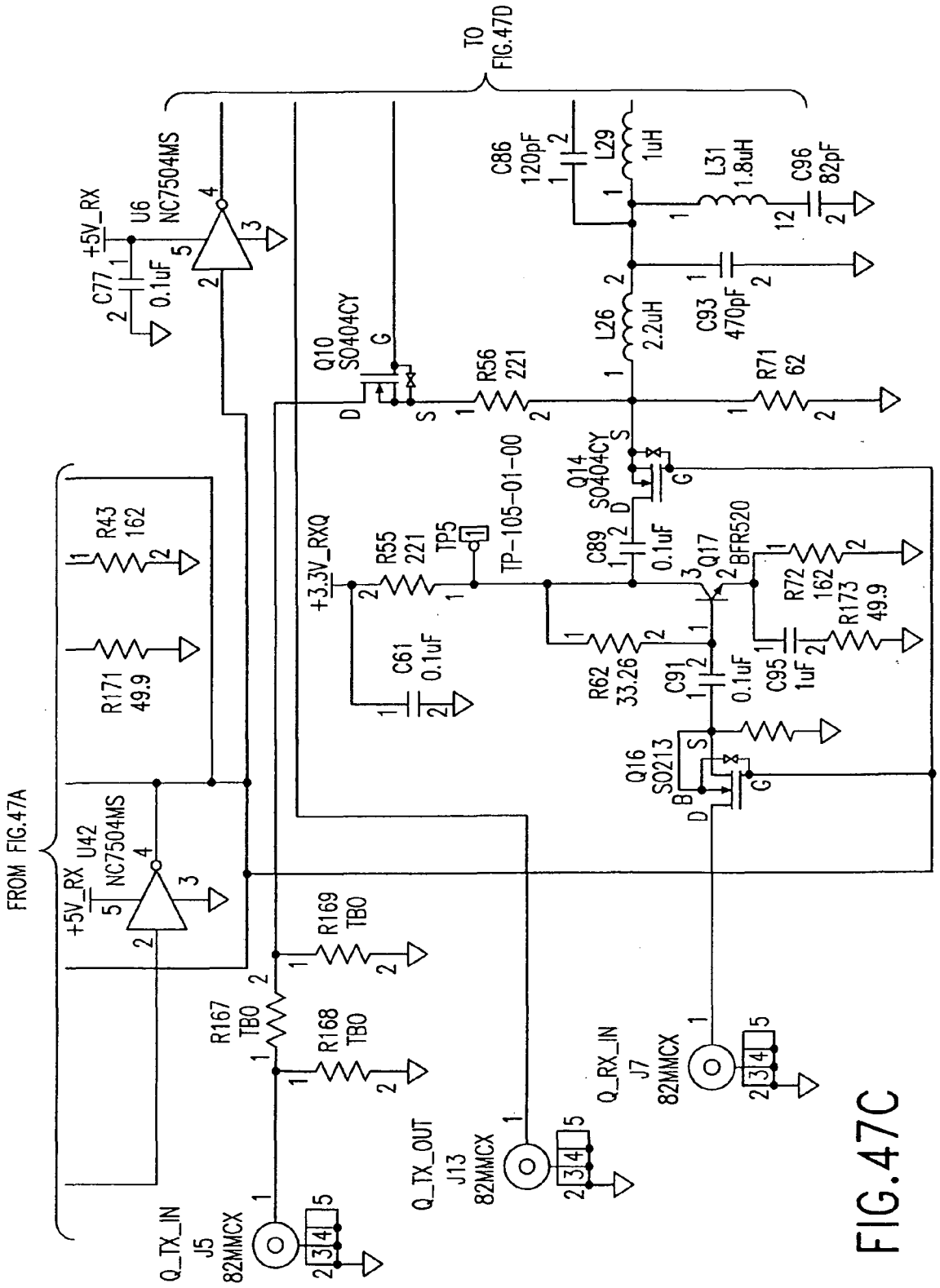
TO FIG.47D
FROM FIG.47A
+5V_RX
U6 NC7504MS
C77 0.1uF
U42 NC7504MS
R43 162
R171 49.9
Q10 SO404CY
R56 221
C86 120pF
L29 1uH
L31 1.8uH
C96 82pF
L26 2.2uH
C93 470pF
R71 62
Q14 SO404CY
+3.3V_RXQ
R55 221
TP5
TP-105-01-00
C61 0.1uF
C89 0.1uF
Q17 BFR520
R72 162
R173 49.9
R62 33.26
C91 0.1uF
C95 1uF
Q16 SO213
R169 TBO
R167 TBO
R168 TBO
Q_TX_IN J5 82MMCX
Q_TX_OUT J13 82MMCX
Q_RX_IN J7 82MMCX

FIG.47C

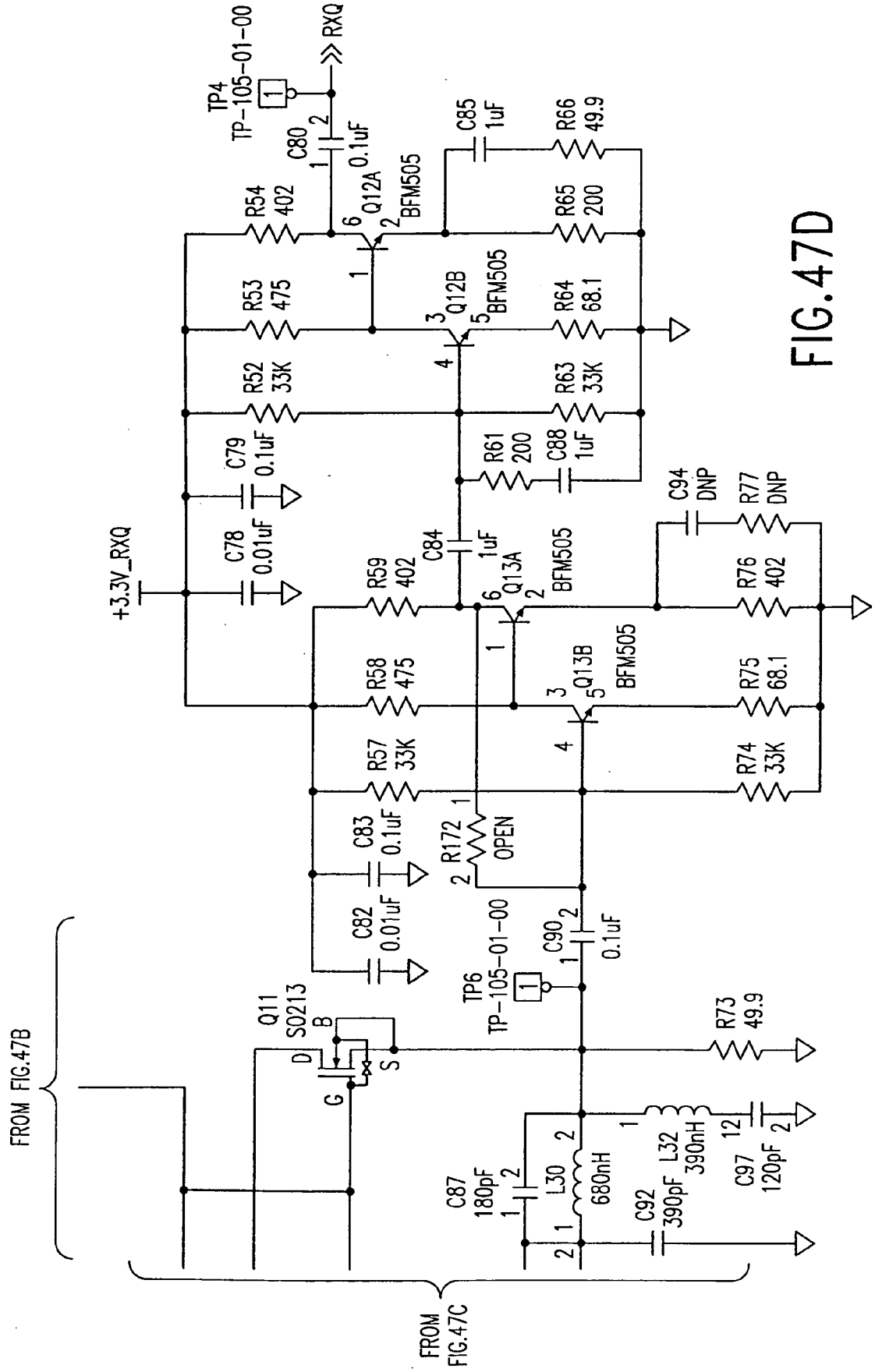
TP4
TP-105-01-00
RXQ
C80
0.1uF
Q12A
BFM505
C85
1uF
R66
49.9
R54
402
R65
200
R53
475
Q12B
BFM505
R64
68.1
R52
33K
R63
33K
C79
0.1uF
R61
200
C88
1uF
C78
0.01uF
+3.3V_RXQ
C84
1uF
C94
DNP
R77
DNP
R59
402
Q13A
BFM505
R76
402
R58
475
Q13B
BFM505
R75
68.1
R57
33K
R74
33K
C83
0.1uF
R172
OPEN
C82
0.01uF
C90
0.1uF
TP6
TP-105-01-00
Q11
SO213
R73
49.9
FROM FIG.47B
C87
180pF
L30
680nH
L32
390nH
C97
120pF
C92
390pF
FROM FIG.47C

FIG.47D

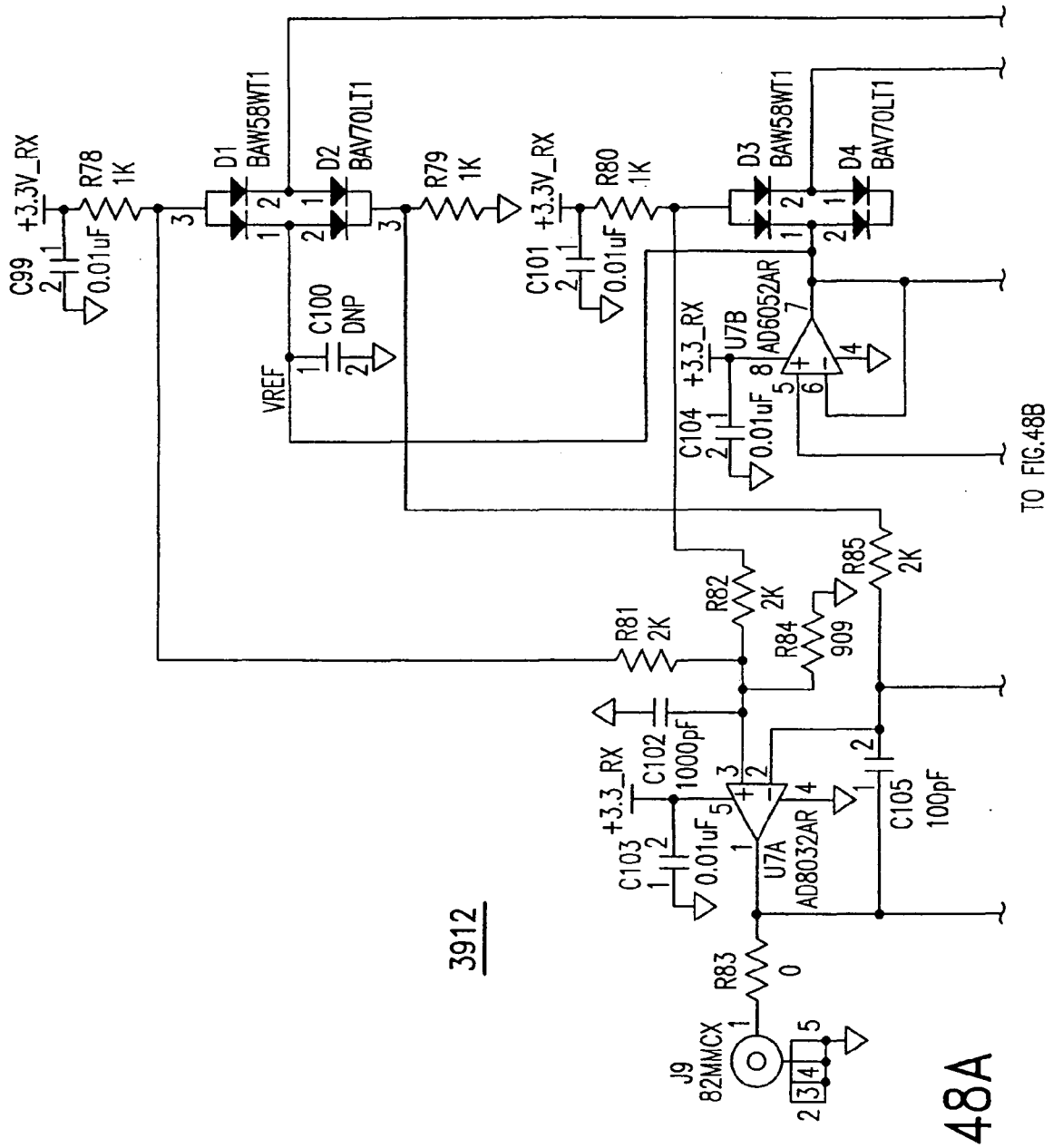
+3.3V_RX
C99
0.01uF
R78
1K
D1
BAW58WT1
D2
BAV70LT1
C100
DNP
VREF
R79
1K
+3.3V_RX
C101
0.01uF
R80
1K
D3
BAW58WT1
D4
BAV70LT1
+3.3_RX
U7B
AD6052AR
C104
0.01uF
TO FIG.48B
R81
2K
R82
2K
R84
909
R85
2K
C102
1000pF
+3.3_RX
C103
0.01uF
U7A
AD8032AR
C105
100pF
R83
0
J9
82MMCX
3912

FIG. 48A

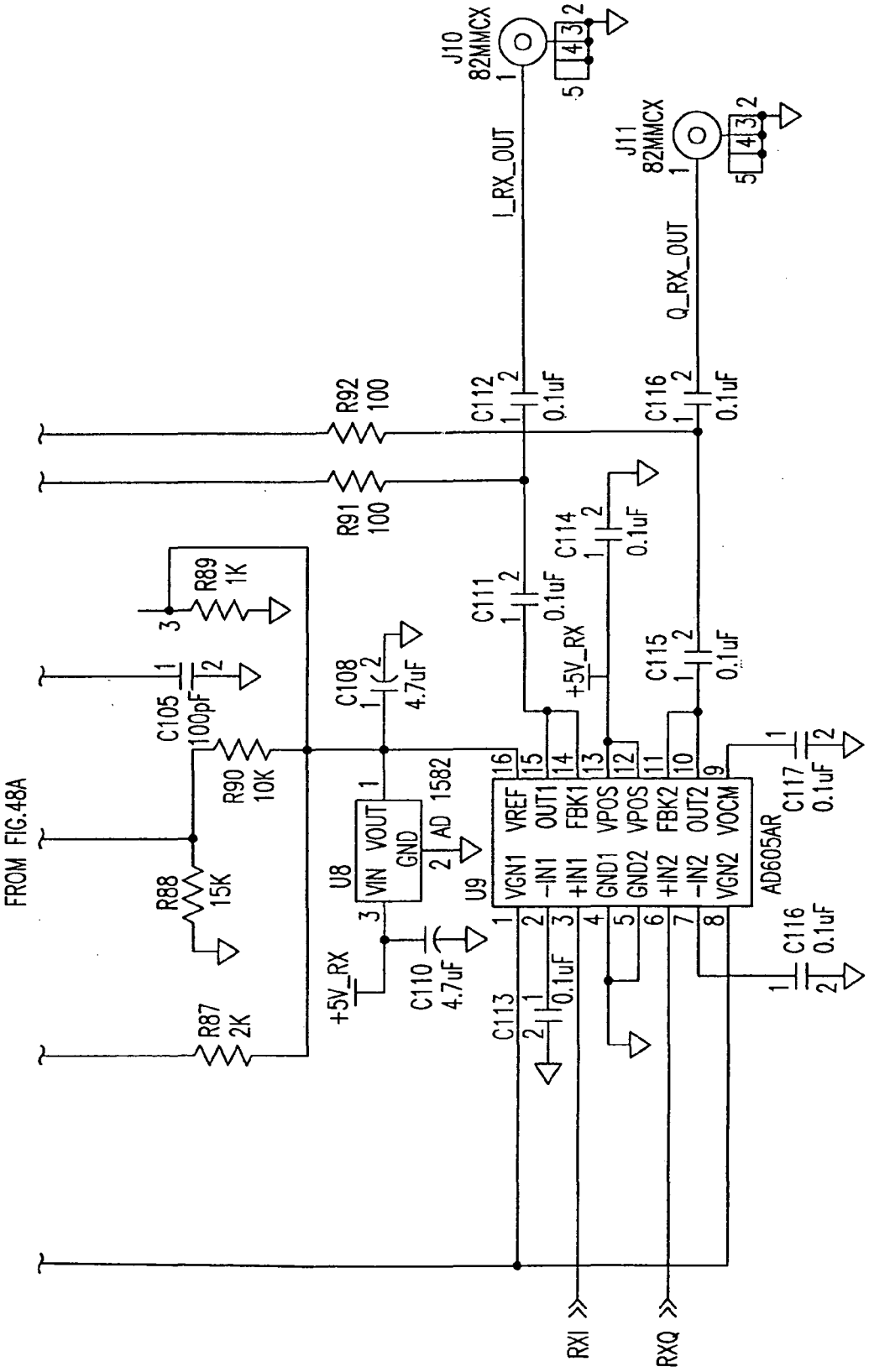
FROM FIG.48A
R87 2K
R88 15K
R89 1K
R90 10K
R91 100
R92 100
C105 100pF
C108 4.7uF
C110 4.7uF
C111 0.1uF
C112 0.1uF
C113 0.1uF
C114 0.1uF
C115 0.1uF
C116 0.1uF
C117 0.1uF
+5V_RX
U8 VIN VOUT GND
AD 1582
U9
VGN1 VREF
-IN1 OUT1
+IN1 FBK1
GND1 VPOS
GND2 VPOS
+IN2 FBK2
-IN2 OUT2
VGN2 VOCM
AD605AR
I_RX_OUT
Q_RX_OUT
J10 82MMCX
J11 82MMCX
RXI
RXQ

FIG. 48B

ITEM	QUANT.	REFERENCE	PART	PART NUMBER	MANUFACTURER
1	4	C3,C52,C108,C110	4.7uF	T491A475K006AS	KEMET
2	26	C51,C54,C57,C58,C60,C61,	0.1uF	GRM39Y5V104Z016	MURATA
		C67,C68,C69,C77,C79,C80,			
		C81,C83,C89,C90,C91,C111,			
		C112,C113,C114,C115,C116,			
		C117,C118,C119			
3	1	C55	DNP	T491A475K006AS	KEMET
4	8	C56,C59,C78,C82,C99,C101,	0.01uF	GRM39X7R103K050	MURATA
		C103,C104			
5	8	C62,C63,C66,C73,C84,C85,	1uF	GRM40Y5V105Z016	MURATA
		C88,C95			
6	4	C64,C75,C86,C97	120pF	GRM39COG121J050	MURATA
7	2	C65,C87	180pF	GRM39COG181J050	MURATA
8	2	C70,C92	390pF	GRM39COG391J050	MURATA
9	2	C71,C93	470pF	GRM39COG471J050	MURATA
10	2	C72,C94	DNP	GRM40Y5V105Z016	MURATA
11	2	C74,C96	82pF	GRM39COG820J050	MURATA
12	2	C100,C106	DNP	DNP	MURATA
13	2	C105,C102	1000pF	GRM39COG102K050	MURATA
14	2	D3,D1	BAW56WT1	BAW56WT1	MOTOROLA
15	2	D4,D2	BAV70LT1	BAV70LT1	MOTOROLA
16	1	JP1	HEADER 7X2	FTSH-107-02-L-D	SAMTEC
17	9	J1,J3,J5,J7,J9,J10,J11,	82MMCX	82MMCX-50-0-1	SUHNER
		J12,J13			
18	1	L1	BLM11A121S	BLM11A121S	MURATA
19	2	L23,L28	2.2uH	LQG21N2R2K10	MURATA
20	2	L29,L24	1uH	LQG21N1ROK10	MURATA
21	2	L30,L25	680nH	LQG21NR68K10	MURATA

FIG.49A

22	2	L26,L31	1.8uH	LQG21N1R8K10	MURATA
23	2	L32,L27	390nH	LQG21NR39K10	MURATA
24	4	Q1,Q5,Q10,Q14	SD404CY	SD404CY	CALOGIC
25	4	Q2,Q4,Q12,Q13	BFM505	BFM505	PHILIPS
26	4	Q3,Q7,Q11,Q16	SD213	SD213	CALOGIC
27	2	Q17,Q8	BFR520	BFR520	PHILIPS
28	4	R19,R20,R21,R83	0	ERJ3GSY0R00	PANASONIC
29	8	R23,R26,R34,R45,R52,R57,	33K	ERJ3GSYJ333	PANASONIC
		R63,R74			
30	4	R24,R27,R53,R58	475	ERJ3EKF4750	PANASONIC
31	6	R25,R28,R47,R54,R59,R76	402	ERJ3EKF4020	PANASONIC
32	4	R29,R30,R55,R56	221	ERJ3EKF2210	PANASONIC
33	2	R32,R61	200	ERJ3GSYJ201	PANASONIC
34	2	R33,R62	33.2K	ERJ3GSYJ333	PANASONIC
35	4	R35,R46,R64,R75	68.1	ERJ3EKF68R1	PANASONIC
36	2	R36,R65	200	ERJ3EKF2000	PANASONIC
37	6	R37,R44,R66,R73,R171,	49.9	ERJ3EKF49R9	PANASONIC
		R173			
38	6	R40,R68,R78,R79,R80,R89	1K	ERJ3EKF1001	PANASONIC
39	2	R42,R71	62	ERJEGSYJ620	PANASONIC
40	2	R43,R72	162	ERJ3EKF1620	PANASONIC
41	2	R77,R48	DNP	ERJ3GSYJ330	PANASONIC
42	4	R81,R82,R85,R87	2K	ERJ3EKF2001	PANASONIC
43	1	R84	909	ERJ3EKF9090	PANASONIC
44	1	R88	15K	ERJ3EJF1502	PANASONIC
45	1	R90	10K	ERJ3EKF1002	PANASONIC
46	2	R91,R92	100	ERJ3EKF1000	PANASONIC
47	6	R164,R165,R166,R167,R168,	TBD		PANASONIC
		R169			
48	2	R170,R172	OPEN		PANASONIC

FIG.49B

49	6	TP1,TP2,TP3,TP4,TP5,TP6	TP-105-01-00		
50	2	U42,U6	NC7S04M5	NC7S04M5	NATIONAL SEMICONDUCTOR
51	1	U7	AD8052AR	AD8052AR	ANALOG DEVICES
52	1	U8	AD1582	AD1582	ANALOG DEVICES
53	1	U9	AD605AR	AD605AR	ANALOG DEVICES
54	1	U43	TK11235AMTL	TK11235BM	TOKO
55	1		BOARD	8500.541.003.V13.01	

FIG.49C

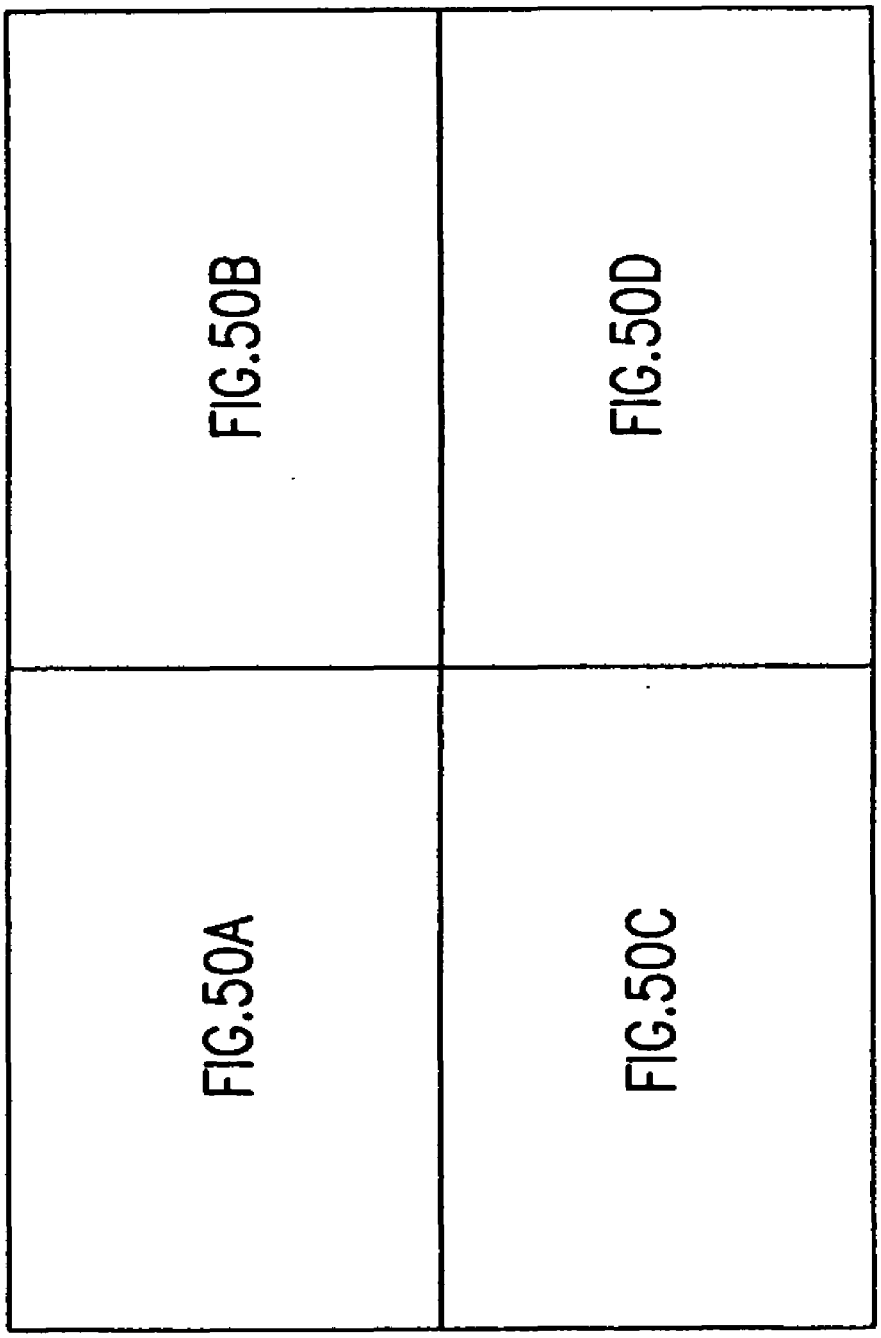

FIG. 50

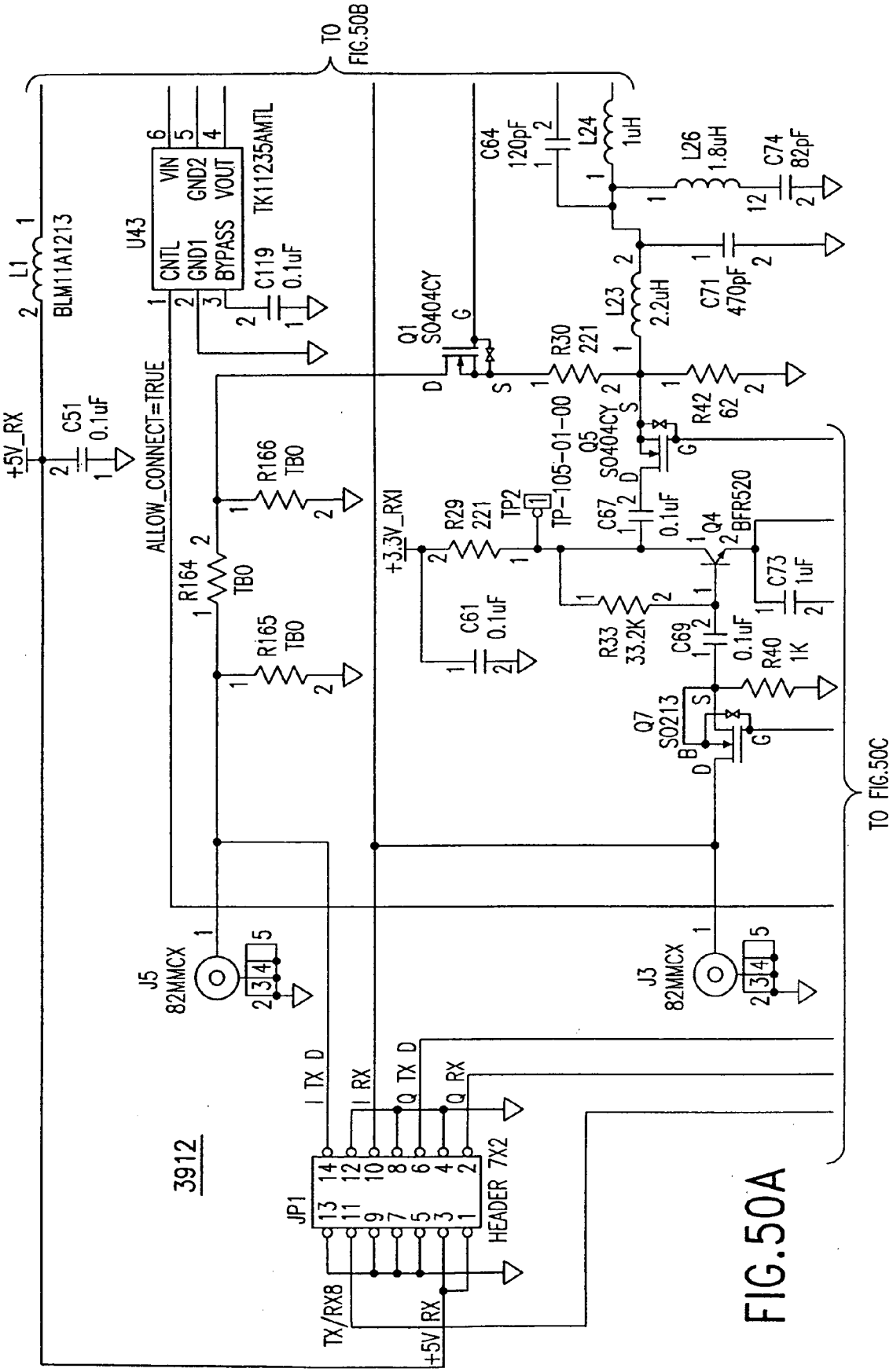
TO FIG.50B
U43
TK11235AMTL
VIN
GND2
VOUT
CNTL
GND1
BYPASS
L1
BLM11A1213
+5V_RX
C51
0.1uF
C119
0.1uF
ALLOW_CONNECT=TRUE
R166
TBO
R164
TBO
R165
TBO
Q1
SO404CY
C64
120pF
L24
1uH
L26
1.8uH
C74
82pF
L23
2.2uH
C71
470pF
R30
221
R42
62
Q5
SO404CY
TP-105-01-00
TP2
+3.3V_RX1
R29
221
C67
0.1uF
Q4
BFR520
C73
1uF
C61
0.1uF
R33
33.2K
C69
0.1uF
R40
1K
Q7
SO213
J5
82MMCX
J3
82MMCX
I TX D
I RX
Q TX D
Q RX
JP1
HEADER 7X2
TX/RX8
+5V RX
3912
TO FIG.50C

FIG.50A

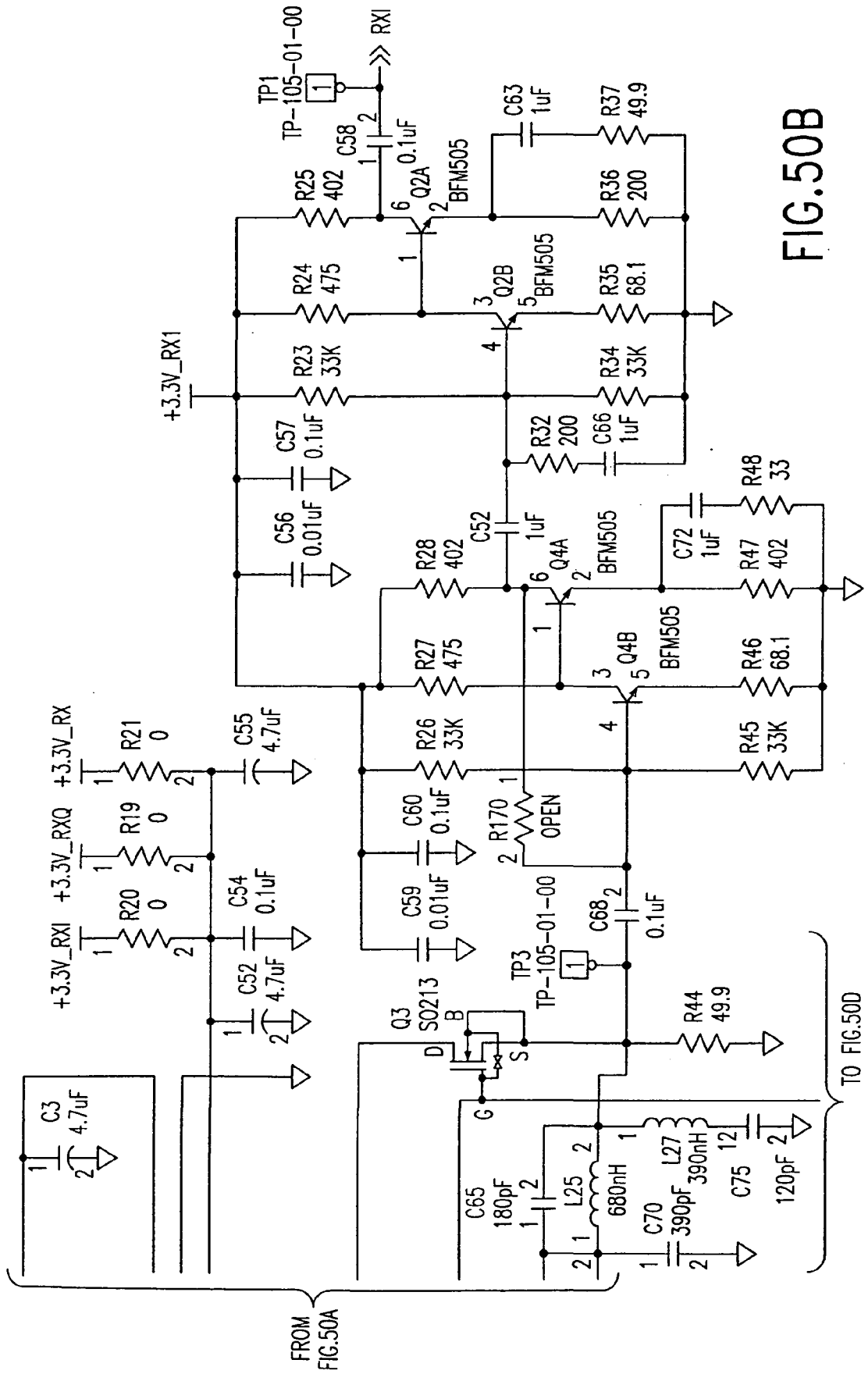
TP1
TP-105-01-00
RXI
C58
0.1uF
R25
402
Q2A
BFM505
C63
1uF
R37
49.9
R36
200
R24
475
Q2B
BFM505
R35
68.1
+3.3V_RX1
R23
33K
R34
33K
C57
0.1uF
R32
200
C66
1uF
C56
0.01uF
C52
1uF
R48
33
R28
402
Q4A
BFM505
C72
1uF
R47
402
R27
475
Q4B
BFM505
R46
68.1
+3.3V_RX
R21
0
C55
4.7uF
R26
33K
R45
33K
+3.3V_RXQ
R19
0
C60
0.1uF
R170
OPEN
+3.3V_RXI
R20
0
C54
0.1uF
C59
0.01uF
C68
0.1uF
TP3
TP-105-01-00
C52
4.7uF
Q3
SO213
R44
49.9
C3
4.7uF
C65
180pF
L25
680nH
L27
390nH
C75
120pF
C70
390pF
FROM FIG.50A
TO FIG.50D

FIG.50B

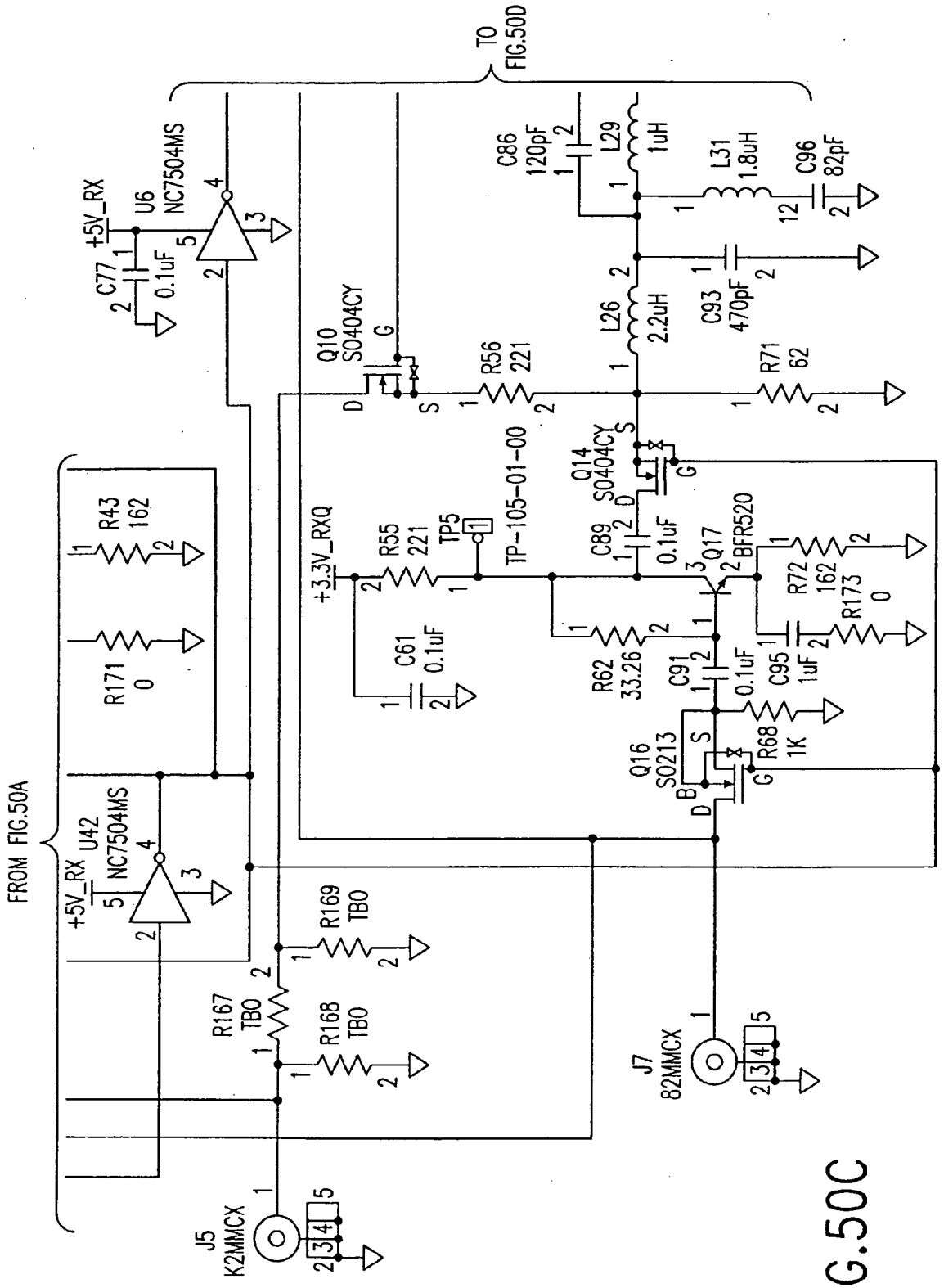
TO FIG.50D
FROM FIG.50A
+5V_RX
U6 NC7504MS
C77 0.1uF
U42 NC7504MS
R43 162
R171 0
Q10 SO404CY
R56 221
C86 120pF
L29 1uH
L31 1.8uH
C96 82pF
L26 2.2uH
C93 470pF
R71 62
Q14 SO404CY
+3.3V_RXQ
R55 221
TP5
TP-105-01-00
C61 0.1uF
C89 0.1uF
Q17 BFR520
R72 162
R173 0
R62 33.26
C91 0.1uF
C95 1uF
Q16 SO213
R68 1K
R169 TBO
R167 TBO
R168 TBO
J5 K2MMCX
J7 82MMCX

FIG.50C

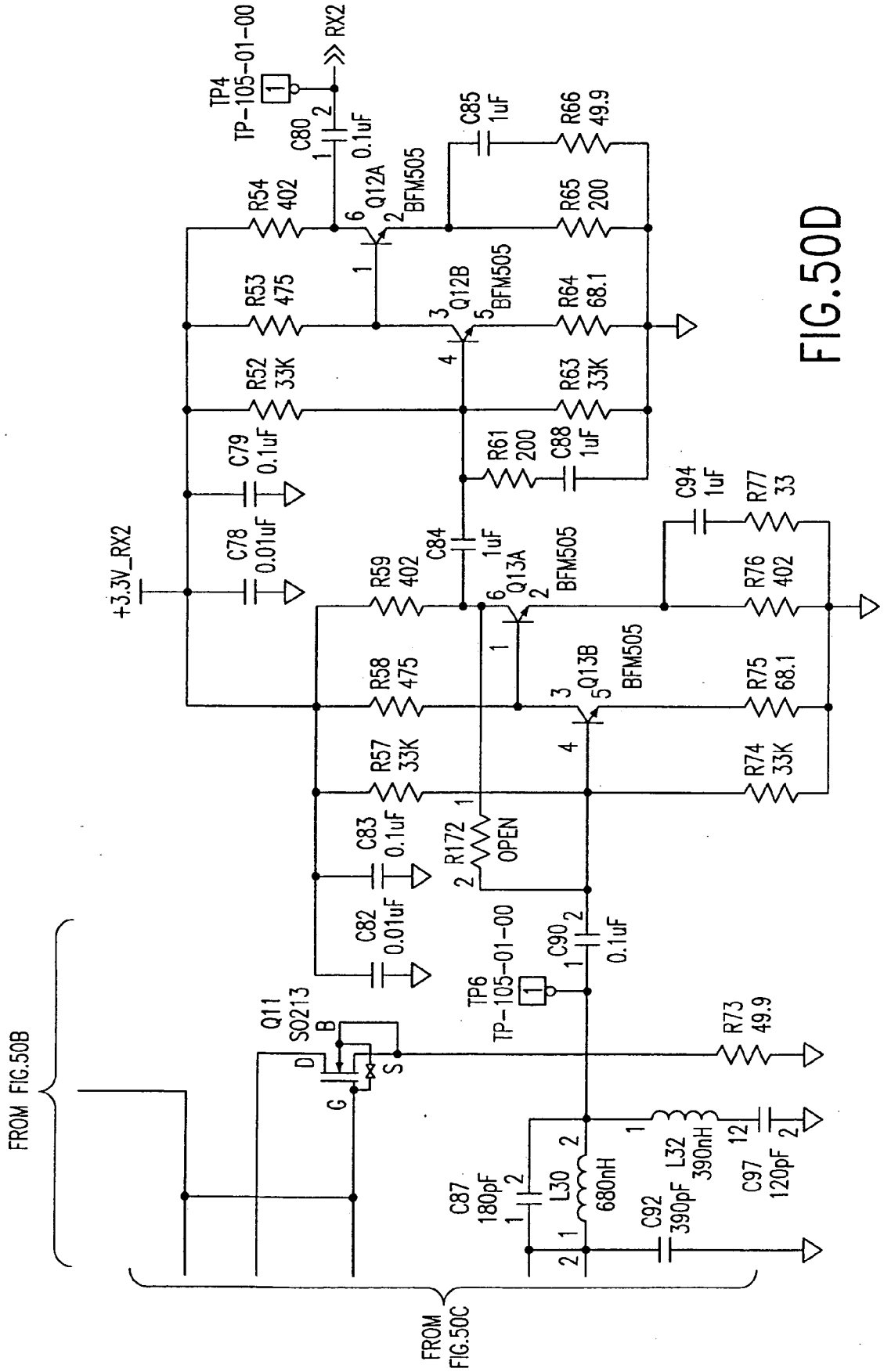
TP4
TP-105-01-00
RX2
C80
0.1uF
Q12A
BFM505
R54
402
R53
475
R52
33K
C79
0.1uF
C78
0.01uF
+3.3V_RX2
C85
1uF
R66
49.9
R65
200
Q12B
BFM505
R64
68.1
R63
33K
R61
200
C88
1uF
C84
1uF
R59
402
Q13A
BFM505
R58
475
R57
33K
C83
0.1uF
R172
OPEN
C82
0.01uF
C94
1uF
R77
33
R76
402
Q13B
BFM505
R75
68.1
R74
33K
TP6
TP-105-01-00
C90
0.1uF
Q11
SO213
B
D
S
G
R73
49.9
C87
180pF
L30
680nH
C92
390pF
L32
390nH
C97
120pF
FROM FIG.50B
FROM FIG.50C

FIG.50D

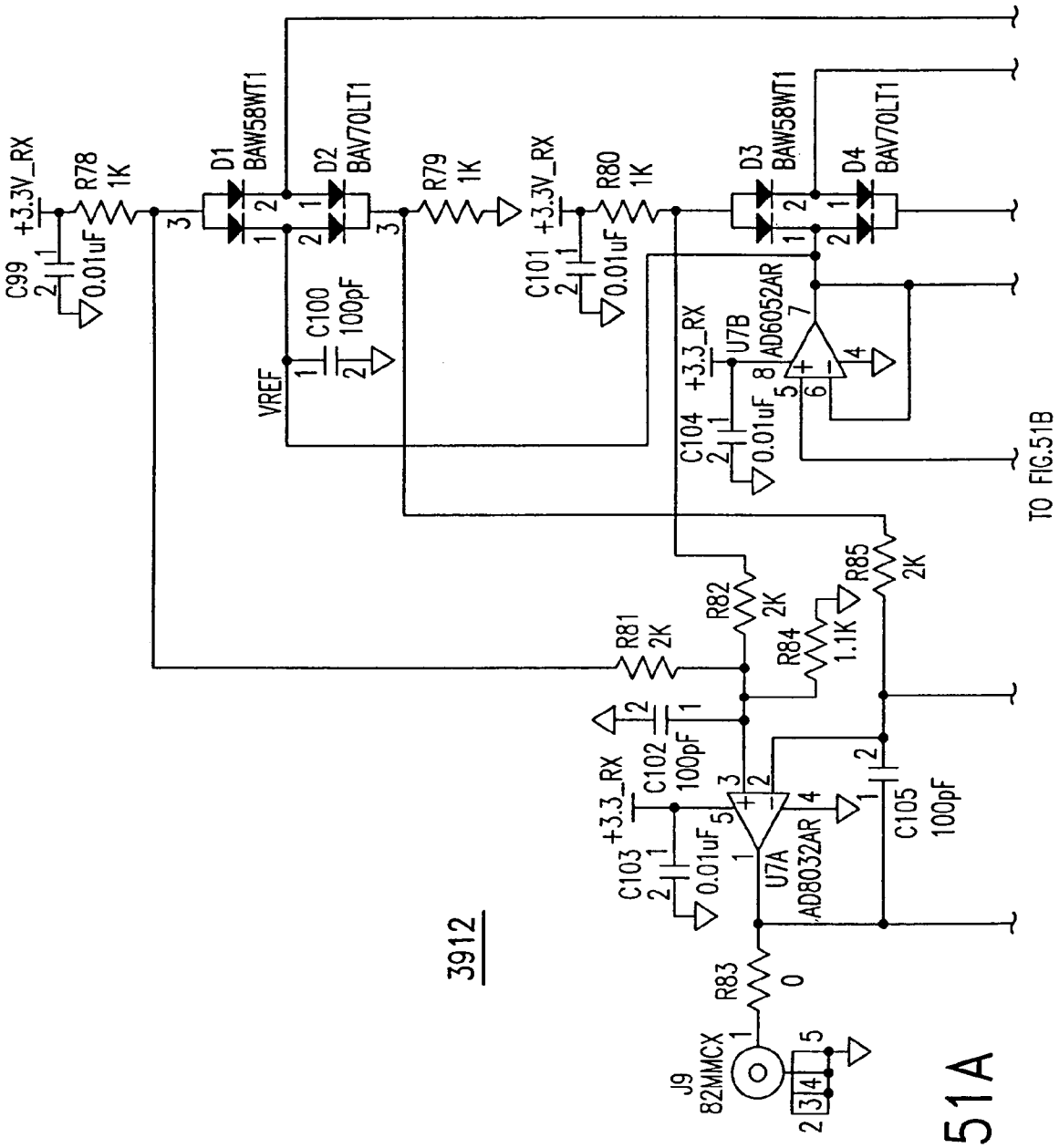
+3.3V_RX
C99
0.01uF
R78
1K
D1
BAW58WT1
D2
BAV70LT1
C100
100pF
VREF
R79
1K
+3.3V_RX
C101
0.01uF
R80
1K
D3
BAW58WT1
D4
BAV70LT1
+3.3_RX
U7B
AD6052AR
C104
0.01uF
TO FIG.51B
R81
2K
R82
2K
R84
1.1K
R85
2K
+3.3_RX
C102
100pF
C103
0.01uF
U7A
AD8032AR
C105
100pF
R83
0
J9
82MMCX
3912

FIG. 51A

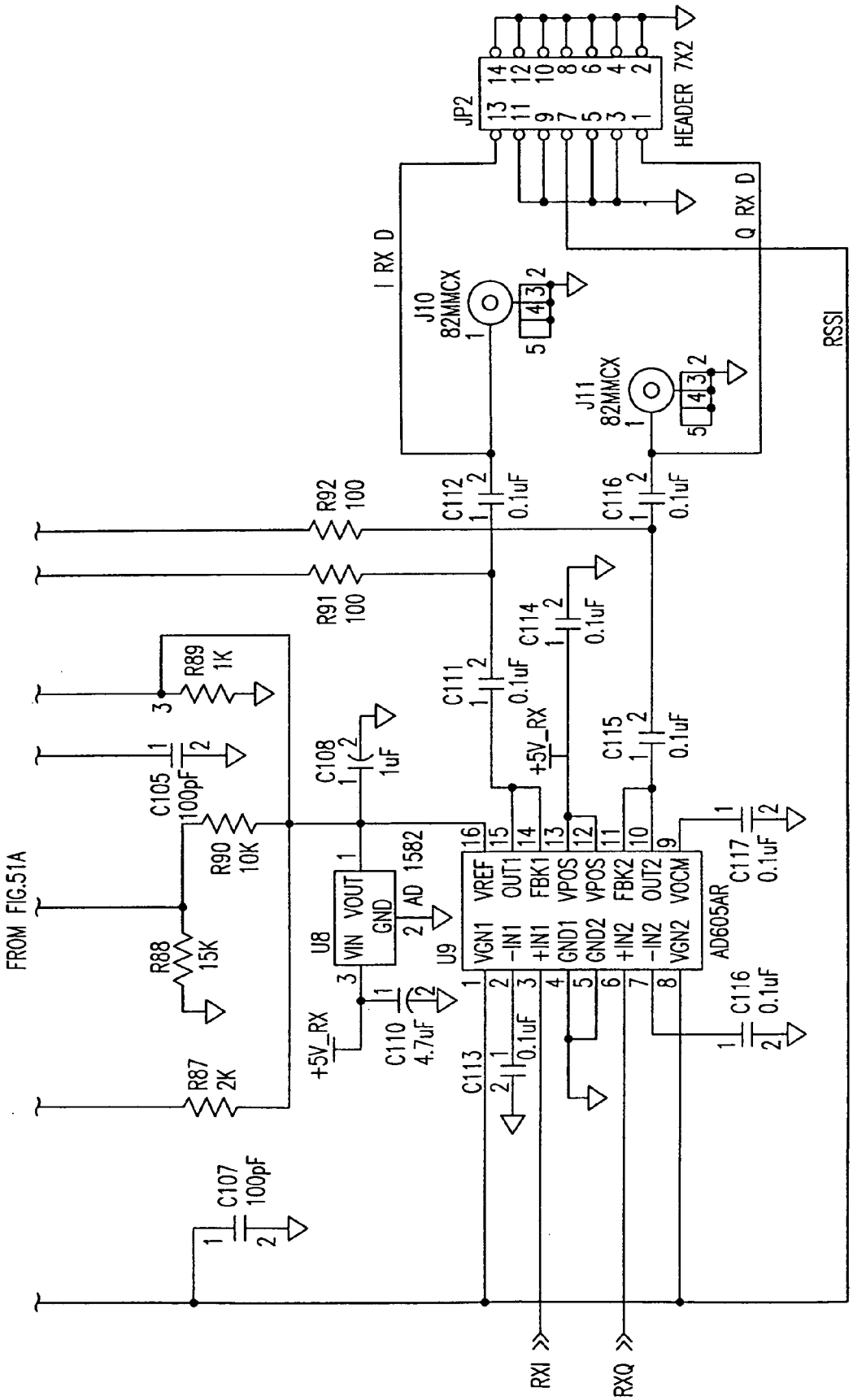
JP2
HEADER 7X2
I RX D
Q RX D
J10
82MMCX
J11
82MMCX
RSSI
R92
100
R91
100
C112
0.1uF
C116
0.1uF
C114
0.1uF
C111
0.1uF
C115
0.1uF
R89
1K
C105
100pF
C108
1uF
R90
10K
FROM FIG.51A
R88
15K
R87
2K
C107
100pF
U8
VIN VOUT
GND
AD 1582
U9
AD605AR
VGN1 VREF
-IN1 OUT1
+IN1 FBK1
GND1 VPOS
GND2 VPOS
+IN2 FBK2
-IN2 OUT2
VGN2 VOCM
+5V_RX
C110
4.7uF
C113
0.1uF
C117
0.1uF
C116
0.1uF
RXI
RXQ

FIG.51B

ITEM	QTY	REFERENCE	PART	PART NUMBER	MANUFACTURER
1	3	C3,C52,C55	4.7uF	T491A475K006AS	KEMET
2	26	C51,C54,C57,C58,C60,C61,	0.1uF	GRM39Y5V104Z016	MURATA
		C67,C68,C69,C77,C79,C80,			
		C81,C83,C89,C90,C91,C111,			
		C112,C113,C114,C115,C116,			
		C117,C118,C119			
3	8	C56,C59,C78,C82,C99,C101,	0.01uF	GRM39X7R103K050	MURATA
		C103,C104			
4	10	C62,C63,C66,C72,C73,C84,	1uf	GRM40Y5V105Z016	MURATA
		C85,C88,C94,C95			
5	4	C64,C75,C86,C97	120pF	GRM39C0G121J050	MURATA
6	2	C87,C65	180pF	GRM39C0G181J050	MURATA
7	2	C70,C92	390pF	GRM39C0G391J050	MURATA
8	2	C71,C93	470pF	GRM39C0G471J050	MURATA
9	2	C96,C74	82pF	GRM39C0G820J050	MURATA
10	5	C100,C102,C105,C106,C107	100pF	GRM39C0G101K050	MURATA
11	1	C108	1uF		
12	1	C110	4.7uF		
13	2	D3,D1	BAW56WT1	BAW56WT1	MOTOROLA
14	2	D4,D2	BAV70LT1	BAV70LT1	MOTOROLA
15	2	JP2,JP1	HEADER 7X2		
16	6	J1,J3,J5,J7,J10,J11	82MMCX	142-0701-231	JOHNSON
17	1	J9	82MMCX	82MMCX-50-0-1	SUHNER
18	1	L1	BLM11A121S	BLM11A121S	MURATA
19	2	L28,L23	2.2uH	LQG21N2R2K10	MURATA
20	2	L24,L29	1uH	LQG21N1R0K10	MURATA
21	2	L30,L25	680nH	LQG21NR68K10	MURATA
22	2	L26,L31	1.8uH	LQG21N1R8K10	MURATA

FIG.52A

23	2	L27,L32	390nH	LQG21NR39K10	MURATA
24	4	Q1,Q5,Q10,Q14	SD404CY	SD404CY	CALOGIC
25	4	Q2,Q4,Q12,Q13	BFM505	BFM505	PHILIPS
26	4	Q3,Q7,Q11,Q16	SD213	SD213	CALOGIC
27	2	Q17,Q8	BFR520	BFR505	PHILIPS
28	5	R19,R20,R21,R171,R173	0		
29	8	R23,R26,R34,R45,R52,R57,	33K	ERJ3GSY333	PANASONIC
		R63,R74			
30	4	R24,R27,R53,R58	475	ERJ3EKF4750	PANASONIC
31	6	R25,R28,R47,R54,R59,R76	402	ERJ3EKF4020	PANASONIC
32	4	R29,R30,R55,R56	221	ERF3EKF2210	PANASONIC
33	2	R32,R61	200	ERJ3GSYJ201	PANASONIC
34	2	R33,R62	33.2K	ERJ3GSYJ333	PANASONIC
35	4	R35,R46,R64,R75	68.1	ERJ3EKF68R1	PANASONIC
36	2	R36,R65	200	ERJ3EKF2000	PANASONIC
37	2	R66,R37	49.9	ERJ3EKF49R9	PANASONIC
38	6	R40,R68,R78,R79,R80,R89	1K	ERJ3EKF1001	PANASONIC
39	2	R42,R71	62	ERJ3GSYJ620	PANASONIC
40	2	R43,R72	162	ERJ3EKF6810	PANASONIC
41	2	R44,R73	49.9	ERJ3EKF1001	PANASONIC
42	2	R77,R48	33	ERJ3GSYJ330	PANASONIC
43	4	R81,R82,R85,R87	2K	ERJ3EKF2001	PANASONIC
44	1	R83	0	ERJGSY0R00	PANASONIC
45	1	R84	1.1K	ERJ3EKF2001	PANASONIC
46	1	R88	15K	ERJ3EKF1502	PANASONIC
47	1	R90	10K	ERJ3EKF1002	PANASONIC
48	2	R91,R92	100	ERJ3EKF1000	PANASONIC
49	6	R164,R165,R166,R167,R168,	TBD		
		R169			
50	2	R170,R172	OPEN		

FIG.52B

51	0	TP1,TP2,TP3,TP4,TP5,TP6	TP-105-01-00		
52	2	U42,U6	NC7S04M5		NATIONAL SEMICONDUCTOR
53	1	U7	AD8032AR	AD8032AR	ANALOG DEVICES
54	1	U8	AD1582	AD1582	ANALOG DEVICES
55	1	U9	AD605AR	AD605AR	ANALOG DEVICES
56	1	U43	TK11235AMTL	TK11235AMTL	TOKO

FIG.52B-1

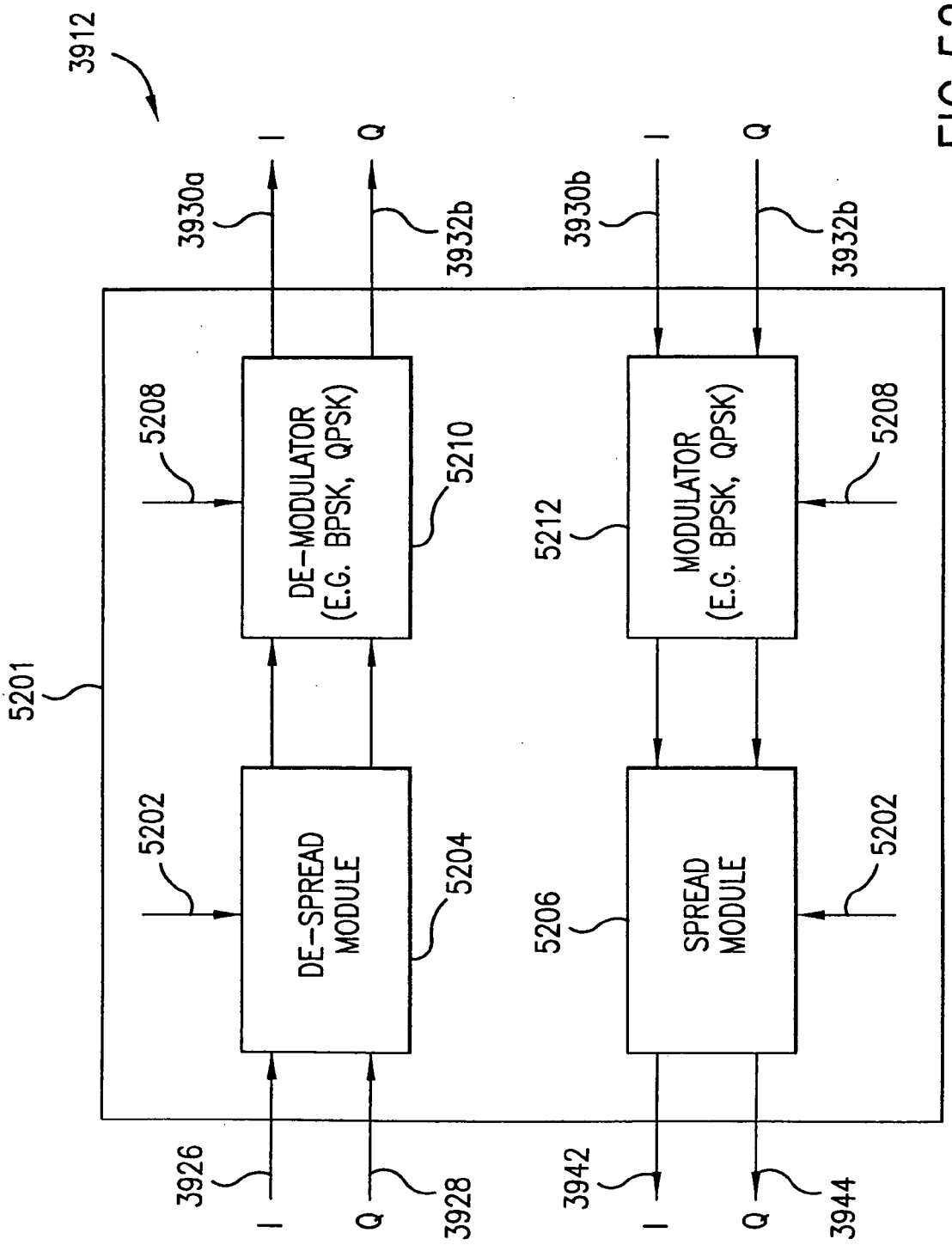
3912
5201
3926
I
Q
3928
5202
DE-SPREAD MODULE
5204
5208
DE-MODULATOR (E.G. BPSK, QPSK)
5210
3930a
I
Q
3932b
3942
I
Q
3944
5206
SPREAD MODULE
5202
5212
MODULATOR (E.G. BPSK, QPSK)
5208
3930b
I
Q
3932b

FIG.52C

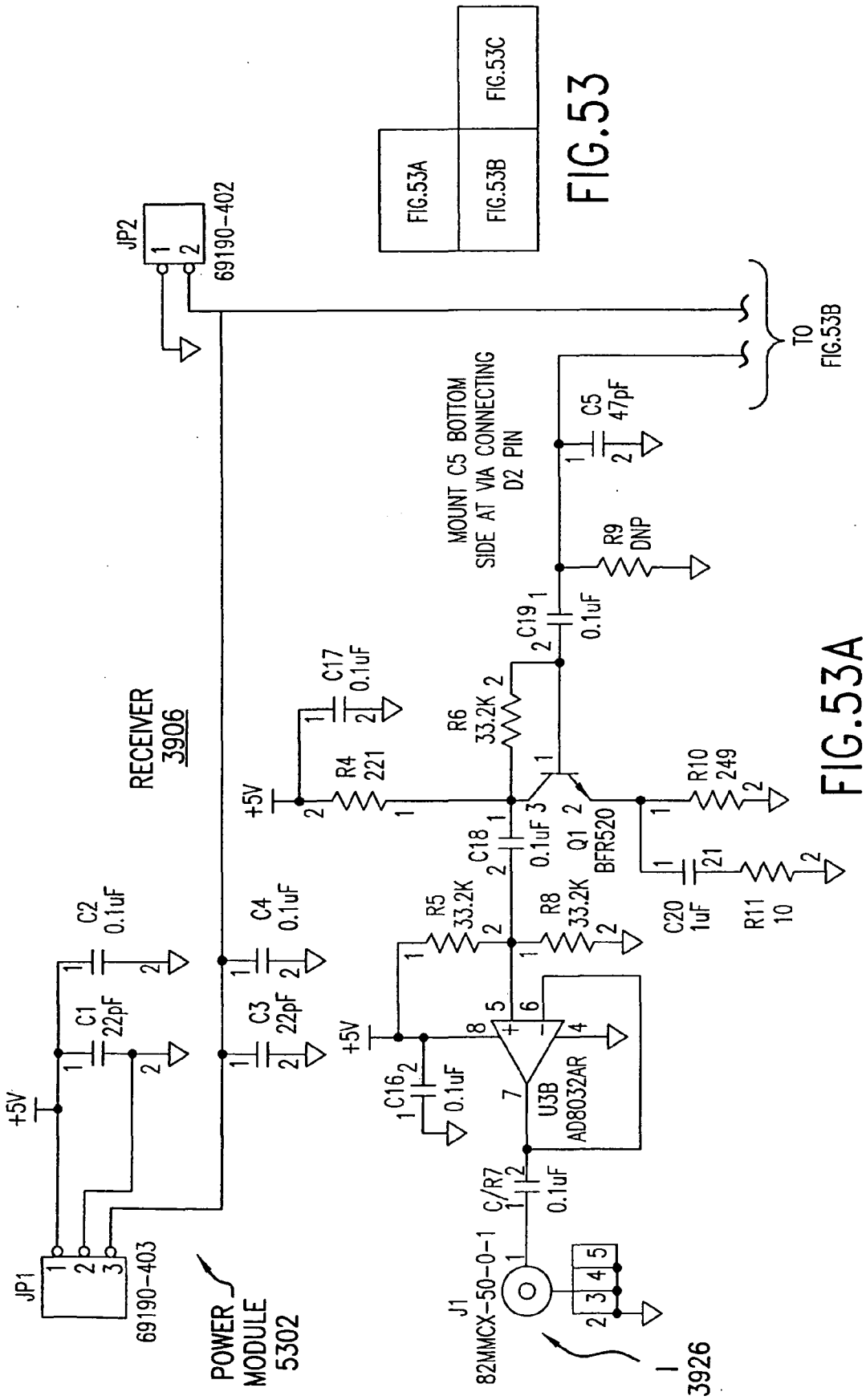
FIG.53A
FIG.53B
FIG.53C
FIG.53
JP2
69190-402
TO FIG.53B
MOUNT C5 BOTTOM SIDE AT VIA CONNECTING D2 PIN
C5 47pF
R9 DNP
C19 0.1uF
C17 0.1uF
R6 33.2K
R4 221
+5V
RECEIVER 3906
R10 249
C18 0.1uF
Q1 BFR520
C20 1uF
R11 10
C2 0.1uF
C4 0.1uF
R5 33.2K
R8 33.2K
C1 22pF
C3 22pF
+5V
C16 0.1uF
U3B AD8032AR
C/R7 0.1uF
JP1
69190-403
POWER MODULE 5302
J1
82MMCX-50-0-1
3926

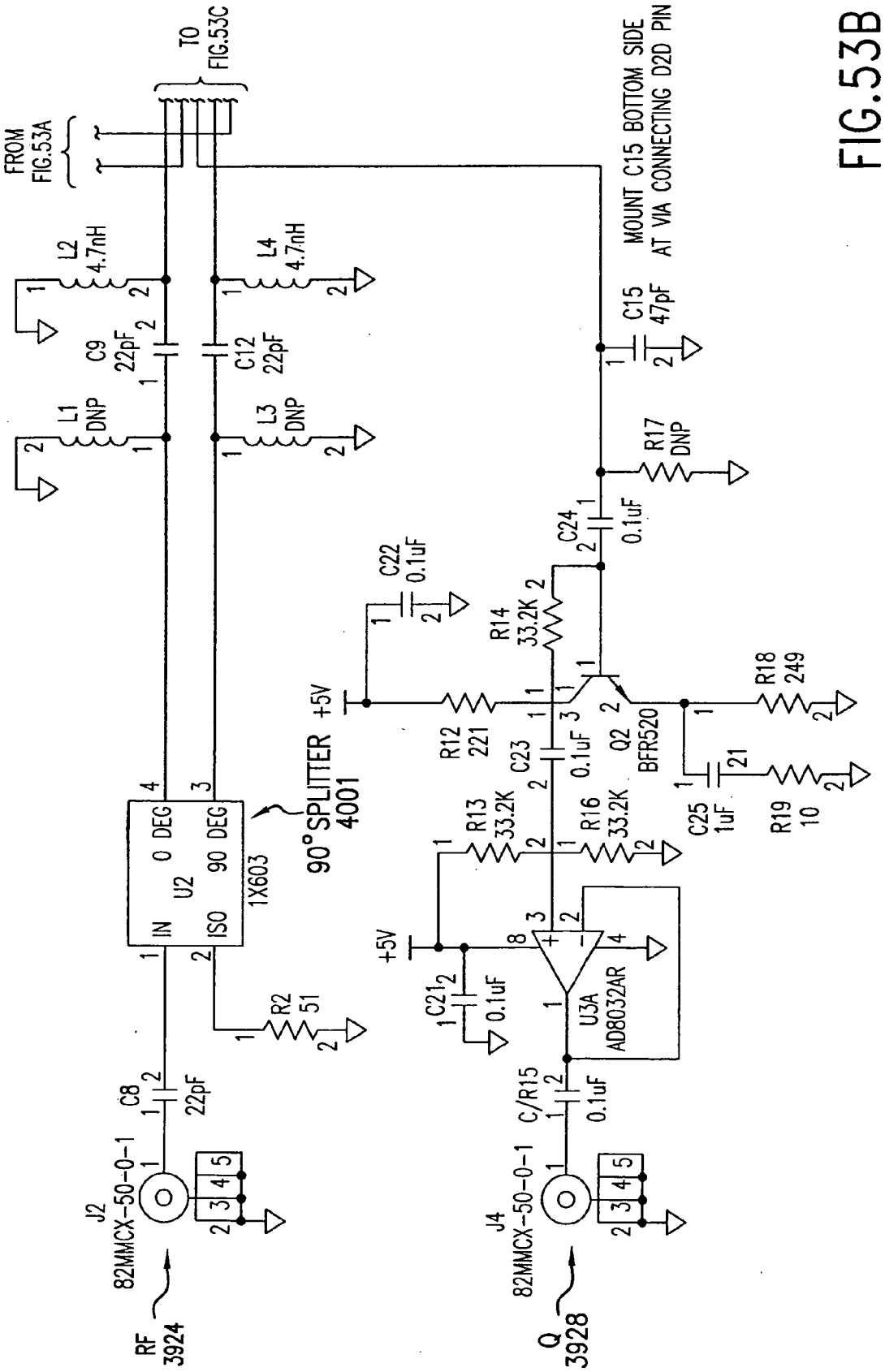
FROM FIG.53A
TO FIG.53C
MOUNT C15 BOTTOM SIDE AT VIA CONNECTING D2D PIN
L2 4.7nH
L4 4.7nH
C9 22pF
C12 22pF
L1 DNP
L3 DNP
C15 47pF
R17 DNP
C24 0.1uF
C22 0.1uF
R14 33.2K
+5V
R12 221
C23 0.1uF
Q2 BFR520
R18 249
C25 1uF
R19 10
90° SPLITTER 4001
U2 1X603
IN
ISO
0 DEG
90 DEG
R13 33.2K
R16 33.2K
+5V
C21 0.1uF
U3A AD8032AR
R2 51
C8 22pF
C/R15 0.1uF
J2 82MMCX-50-0-1
J4 82MMCX-50-0-1
RF 3924
Q 3928

FIG.53B

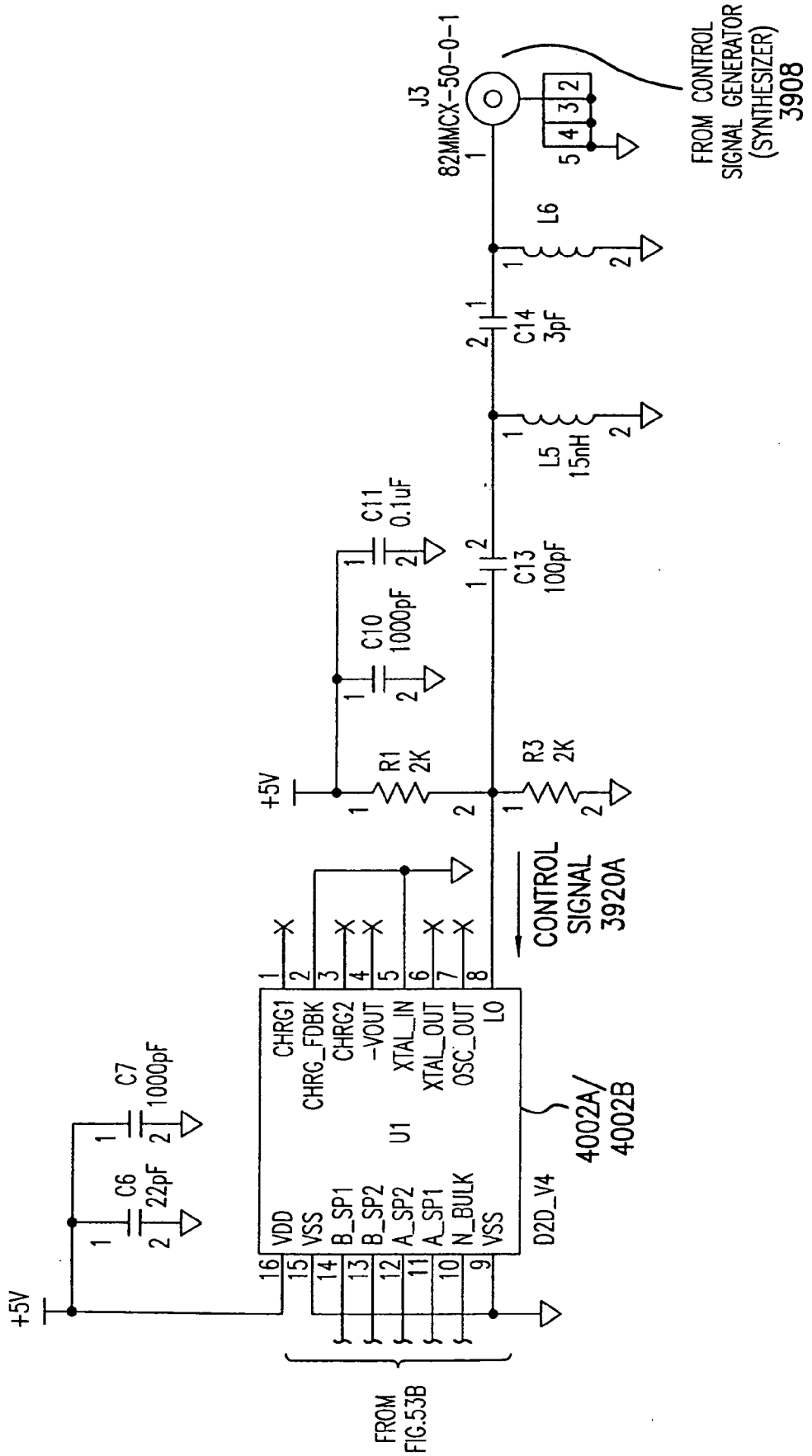
J3
82MMCX-50-0-1
FROM CONTROL SIGNAL GENERATOR (SYNTHESIZER) 3908
L6
C14 3pF
L5 15nH
C11 0.1uF
C13 100pF
C10 1000pF
R1 2K
R3 2K
+5V
CONTROL SIGNAL 3920A
CHRG1
CHRG_FDBK
CHRG2
-VOUT
XTAL_IN
XTAL_OUT
OSC_OUT
LO
U1
VDD
VSS
B_SP1
B_SP2
A_SP2
A_SP1
N_BULK
VSS
D2D_V4
4002A/ 4002B
C7 1000pF
C6 22pF
+5V
FROM FIG.53B

FIG.53C

ITEM	QTY	REFERENCE	PART	PART NIMBER	MANUFACTURER
1	10	C/R7,C/R15,C16,C17,C18	0.1uF	GRM39Y5V104Z016	MURATA
		C19,C21,C22,C23,C24			
2	6	C1,C3,C6,C8,C9,C12	22pF	GRM39COG220J050	MURATA
3	3	C2,C4,C11	0.1uF	GRM39X7R104K016	MURATA
4	2	C5,C15	47pF	GRM39COG470J050	MURATA
5	2	C10,C7	1000pF	GRM39X7R102K050	MURATA
6	1	C13	100pF	GRM39X7R101J050	MURATA
7	1	C14	3pF	GRM40COG030B50V	MURATA
8	2	C20,C25	1uF	GRM40Y5V105Z016	MURATA
9	1	JP1	69190-403	69190-403	BERG
10	1	JP2	69190-402	69190-402	BERG
11	4	J1,J2,J3,J4	82MMCX-50-0-1	82MMCX-50-0-1	SUHNER
12	2	L3,L1	DNP	L	TOKO
13	2	L4,L2	4.7nH	LL1608-F4N7K	TOKO
14	1	L5	15nH	LL2012FH15NJ	TOKO
15	1	L6	DNP	DNP	TOKO
16	2	Q1,Q2	BFR520	BFR520	PHILIPS
17	2	R1,R3	2K	ERJ3GSYJ202	PANASONIC
18	1	R2	51	ERJ3GSYJ510	PANASONIC
19	2	R4,R12	221	ERJ3EKF2210	PANASONIC
20	6	R5,R6,R8,R13,R14,R16	33.2K	ERJ3EKF3322	PANASONIC
21	2	R9,R17	DNP	ERJ3EKF1001	PANASONIC
22	2	R10,R18	249	ERJ3EKF2490	PANASONIC
23	2	R11,R19	10	ERJ3GSYJ100	PANASONIC
24	1	U1	D2D_V4	D2D_V4	PARKER VISION
25	1	U2	1X603	1X603	ANAREN
26	1	U3	AD8032AR	AD8032AR	ANALOG DEVICES
27	1		BOARD	STB500.641.001 V03.00	

FIG.54

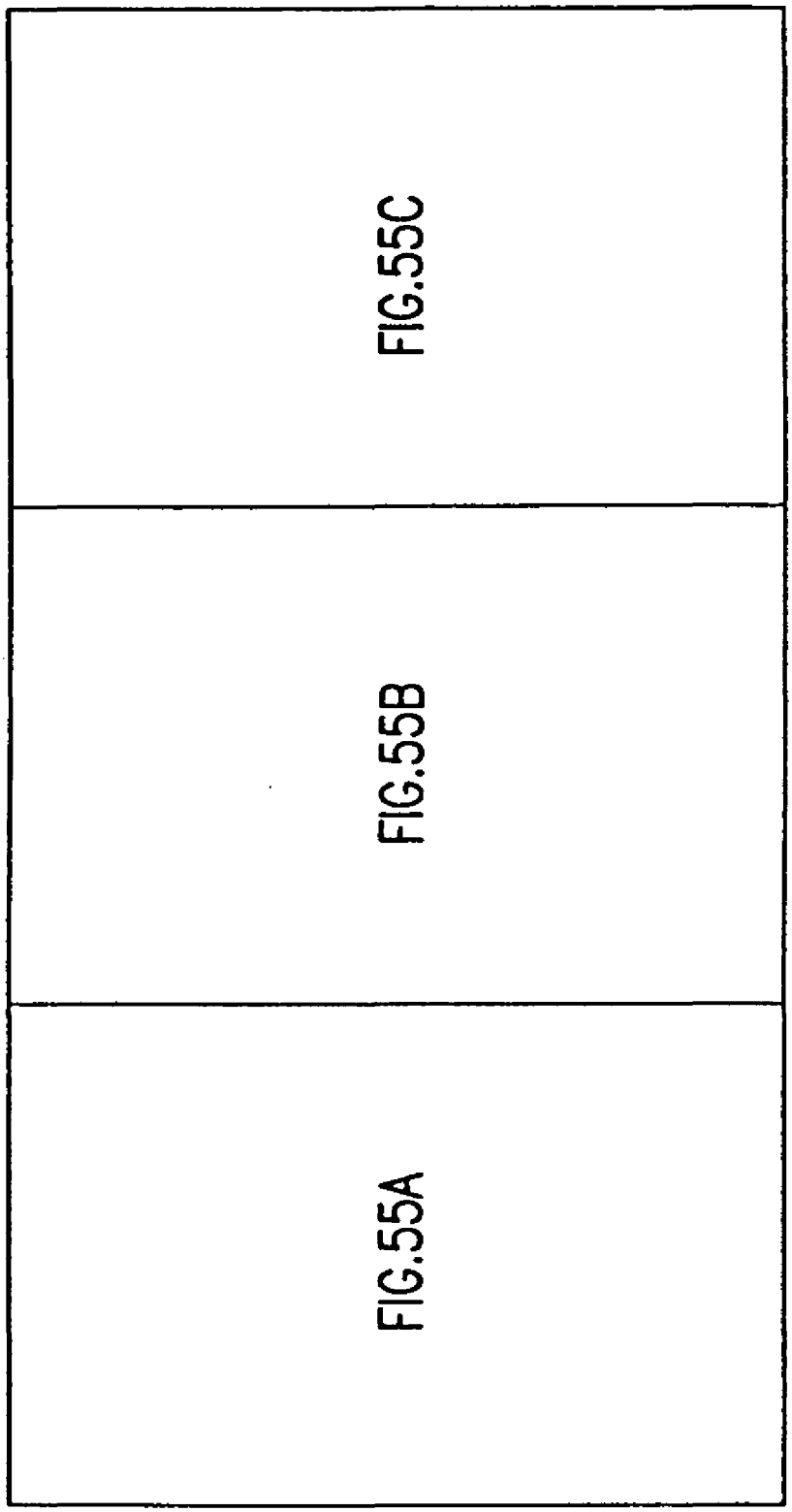

FIG.55

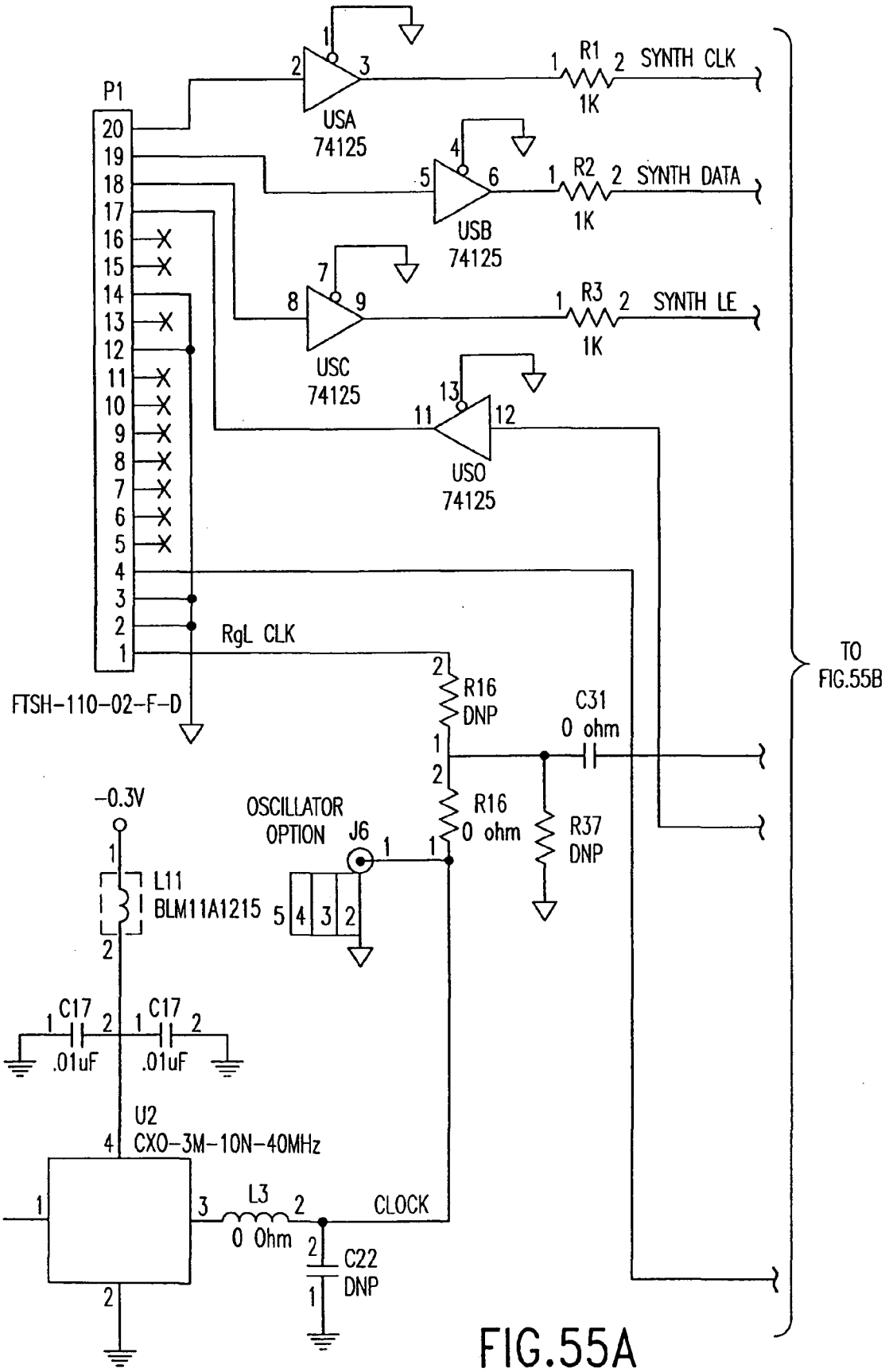
P1
FTSH-110-02-F-D
USA
74125
USB
74125
USC
74125
USO
74125
R1
1K
SYNTH CLK
R2
1K
SYNTH DATA
R3
1K
SYNTH LE
RgL CLK
R16
DNP
C31
0 ohm
R16
0 ohm
R37
DNP
TO
FIG.55B
-0.3V
OSCILLATOR
OPTION
J6
L11
BLM11A1215
C17
.01uF
C17
.01uF
U2
CXO-3M-10N-40MHz
L3
0 Ohm
CLOCK
C22
DNP

FIG.55A

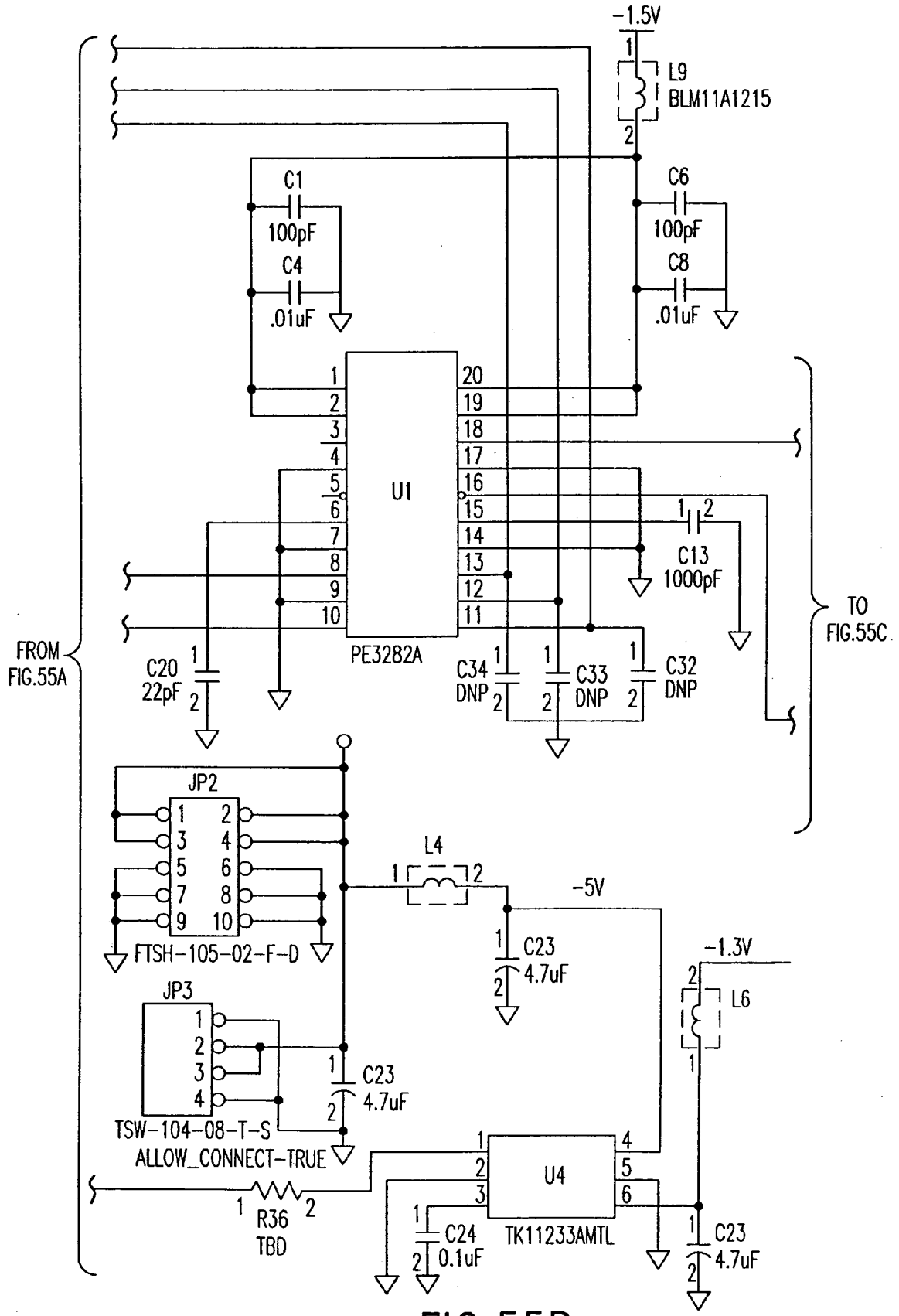
-1.5V
L9
BLM11A1215
C1
100pF
C4
.01uF
C6
100pF
C8
.01uF
U1
PE3282A
C13
1000pF
TO
FIG.55C
FROM
FIG.55A
C20
22pF
C34
DNP
C33
DNP
C32
DNP
JP2
FTSH-105-02-F-D
L4
-5V
C23
4.7uF
-1.3V
L6
JP3
TSW-104-08-T-S
ALLOW_CONNECT-TRUE
C23
4.7uF
U4
TK11233AMTL
R36
TBD
C24
0.1uF
C23
4.7uF

FIG.55B

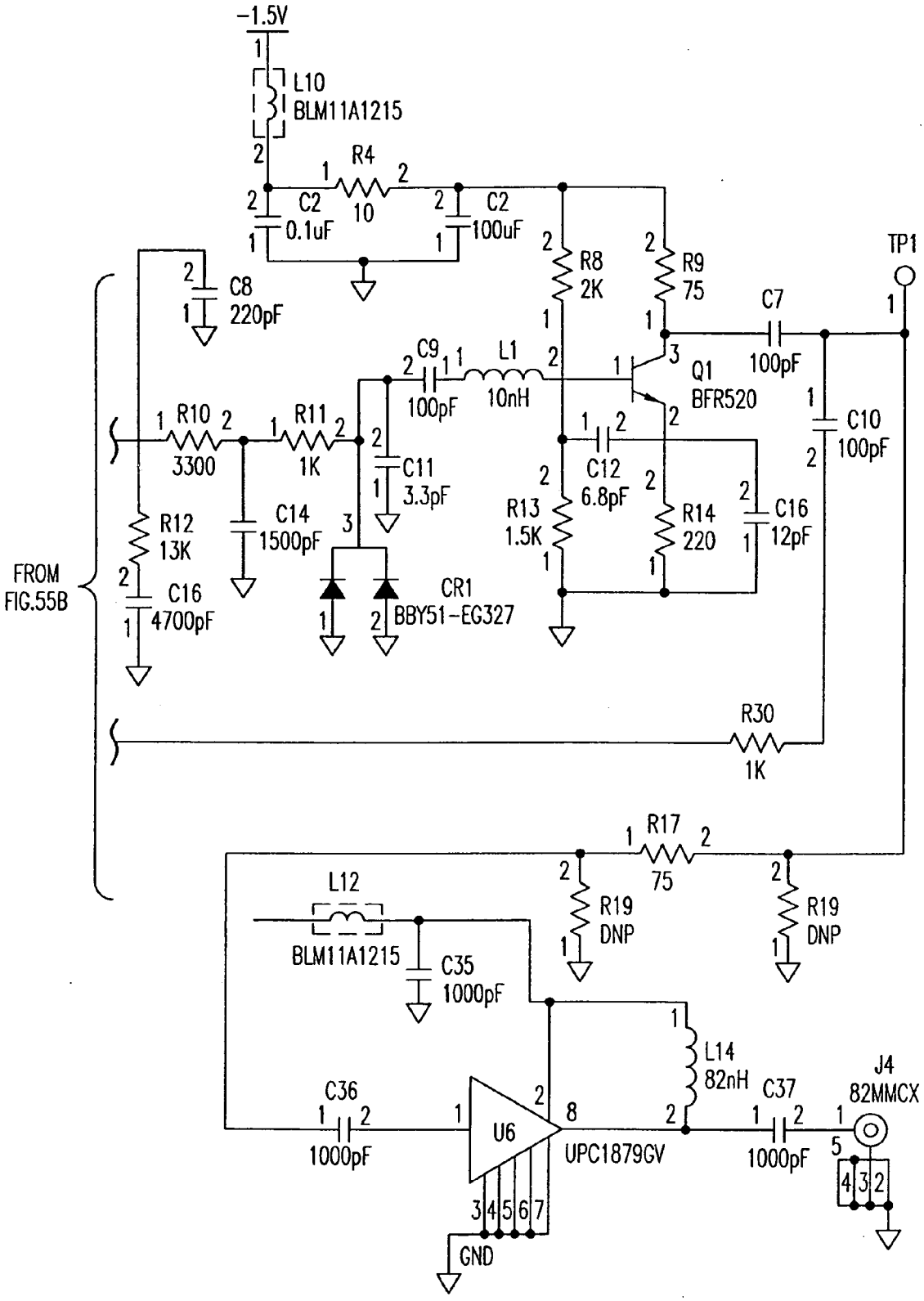
-1.5V
L10
BLM11A1215
R4
10
C2
0.1uF
C2
100uF
R8
2K
R9
75
TP1
C8
220pF
C7
100pF
C9
100pF
L1
10nH
Q1
BFR520
R10
3300
R11
1K
C11
3.3pF
C12
6.8pF
C10
100pF
R13
1.5K
R14
220
C16
12pF
R12
13K
C14
1500pF
FROM
FIG.55B
C16
4700pF
CR1
BBY51-EG327
R30
1K
R17
75
L12
BLM11A1215
R19
DNP
R19
DNP
C35
1000pF
L14
82nH
J4
82MMCX
C36
1000pF
U6
UPC1879GV
C37
1000pF
GND

FIG.55C

ITEM	QTY	REFERENCE	PART	DESCRIPTION	PART NUMBER	MANUFACT.
1	1	CR1	BBY51-E6327	DIODE,VARACTOR	BBY51-E6327	SIEMENS
2	6	C1,C3,C5,C7,C9,C10	100pF	CAPACITOR,CERAMIC,100pF,10%,COG,0603	GRM39COG101K050	MURATA
3	2	C29,C2	0.1uF	CAPACITOR,CERAMIC,.1uF,10%,X7R,0603	GRM39X7R104K016AD	MURATA
4	3	C4,C8,C17	.01uF	CAPACITOR,CERAMIC,.01uF,10%,X7R,0603	GRM39X7R103K050	MURATA
5	1	C6	220pF	CAPACITOR,CERAMIC,220pF,5%,COG,0603	GRM39COG221J025	MURATA
6	1	C11	3.3pF	CAPACITOR,CERAMIC,3.3pF,5%,COG,0603	GRM39COG3R3B100V	MURATA
7	1	C12	6.8pF	CAPACITOR,CERAMIC,6.8pF,+/-.25pF,COG,0603	GRM39COG6R8C100V	MURATA
8	4	C13,C35,C36,C37	1000pF	CAPACITOR,CERAMIC,1000pF,10%,X7R,0603	GRM39X7R102K016	MURATA
9	1	C14	1500pF	CAPACITOR,CERAMIC,1500Pf,10%,X7R,0603	GRM39X7R152K016	MURATA
10	1	C15	12pF	CAPACITOR,CERAMIC,12pF,5%,COG,0603	GRM39COG120J050	MURATA
11	1	C16	4700pF	CAPACITOR,CERAMIC,4700pF,10%,0603	GRM39X7R472K016	MURATA
12	2	C20,C18	22pF	CAPACITOR,CERAMIC,22pF,10%,COG,0603	GRM36COG220K050	MURATA
13	4	C22,C32,C33,C34	DNP	CAPACITOR,CERAMIC,,,,0603		MURATA
14	3	C23,C24,C27	4.7uF	CAPACITOR,TANTALUM,4.7uF,10%,3216	T491A475K006AS	KEMET
15	3	R16,C31,R17	0 OHM	RESISTOR,ZERO OHM,0603	ERJ3GSY0R00	PANASONIC
16	1	JP1	FTSH-110-02-F-D	HEADER,DUAL ROW 10X2,.050X.050	FTSH-110-02-F-D	SAMTEC
17	1	JP2	FTSH-105-02-F-D	HEADER,DUAL ROW 5X2,.050X.050	FTSH-105-02-F-D	SAMTEC
18	1	JP3	TSW-104-08-T-S	HEADER, SINGLE ROW 4 PIN, .100"	TSW-104-08-T-S	BERG
19	2	J5,J6	82MMCX	RF CONNECTOR	82MMCX-50-0-1	SUHNER
20	1	L1	18nH	INDUCTOR,18nH,10%, 0805	0805CS-180XJBC	COILCRAFT
21	1	L3	0 OHM	ZERO OHM JUMPER	RM73ZIJT	KOA
22	6	L4,L6,L9,L10,L11,L12	BLM11A121S	FERRITE BEAD, 0603	BLM11A121S	MURATA
23	1	L14	82nH	INDUCTOR, 82nH,10%,0805	LL2012-F82NK	TOKO
24	1	Q1	BFR520	TRANSISTOR, NPN	BFR520	PHILIPS
25	5	R1,R2,R3,R11,R30	1K	RESISTOR, 1K,5%,0603	ERF3GSYJ102	PANASONIC
26	1	R4	10	RESISTOR, 10 OHM,5%,0603	ERJ3GSYJ1R0	PANASONIC

FIG.56A

27	1	R8	2K	RESISTOR, 2K,5%,0603	ERJ3GSYJ202	PANASONIC
28	1	R9	75	RESISTOR, 75 OHM,5%,0603	ERJ3GSYJ750	PANASONIC
29	1	R10	3300	RESISTOR, 3.3K,5%,0603	ERJ3GSYJ332	PANASONIC
30	1	R12	13K	RESISTOR, 13K,5%,0603	ERJ3GSYJ133	PANASONIC
31	1	R13	1.5K	RESISTOR, 1.5K,5%,0603	ERJ3GSYJ152	PANASONIC
32	1	R14	220	RESISTOR, 220 OHM,5%,0603	ERJ3GSYJ221	PANASONIC
33	1	R15	DNP	RESISTOR, ZERO OHM,0603	ERJ3GSY0R00	PANASONIC
34	2	R18,R19	DNP	RESISTOR, 91 OHM,5%,0603	ERJ3GSYJ910	PANASONIC
35	1	R36	TBD	RESISTOR, ZERO OHM,0603	ERJ3GSY0R00	PANASONIC
36	1	R37	DNP	RESISTOR,,,0603		PANASONIC
37	1	TP1	TEST POINT			
38	1	U1	PE3282A	IC,SYNTHESIZER	PE3282A	PEREGRINE
39	1	U2	CXO-3M-10N-40MHz	XTAL OSC,40MHz	CXO-3M-10N-40MHZ A/I	STATEK
40	1	U4	TK11233AMTL	VOLTAGE REGULATOR,3.5V	TK11235BM	TOKO
41	1	U5	74125	IC,BUFFER	MC74LCX125DT	MOTOROLA
42	1	U6	UPC1678GV	IC,RF AMPLIFIER	UPC1678GV	NEC
43	1		STB500.641.008 V03.00	BOARD		

FIG.56B

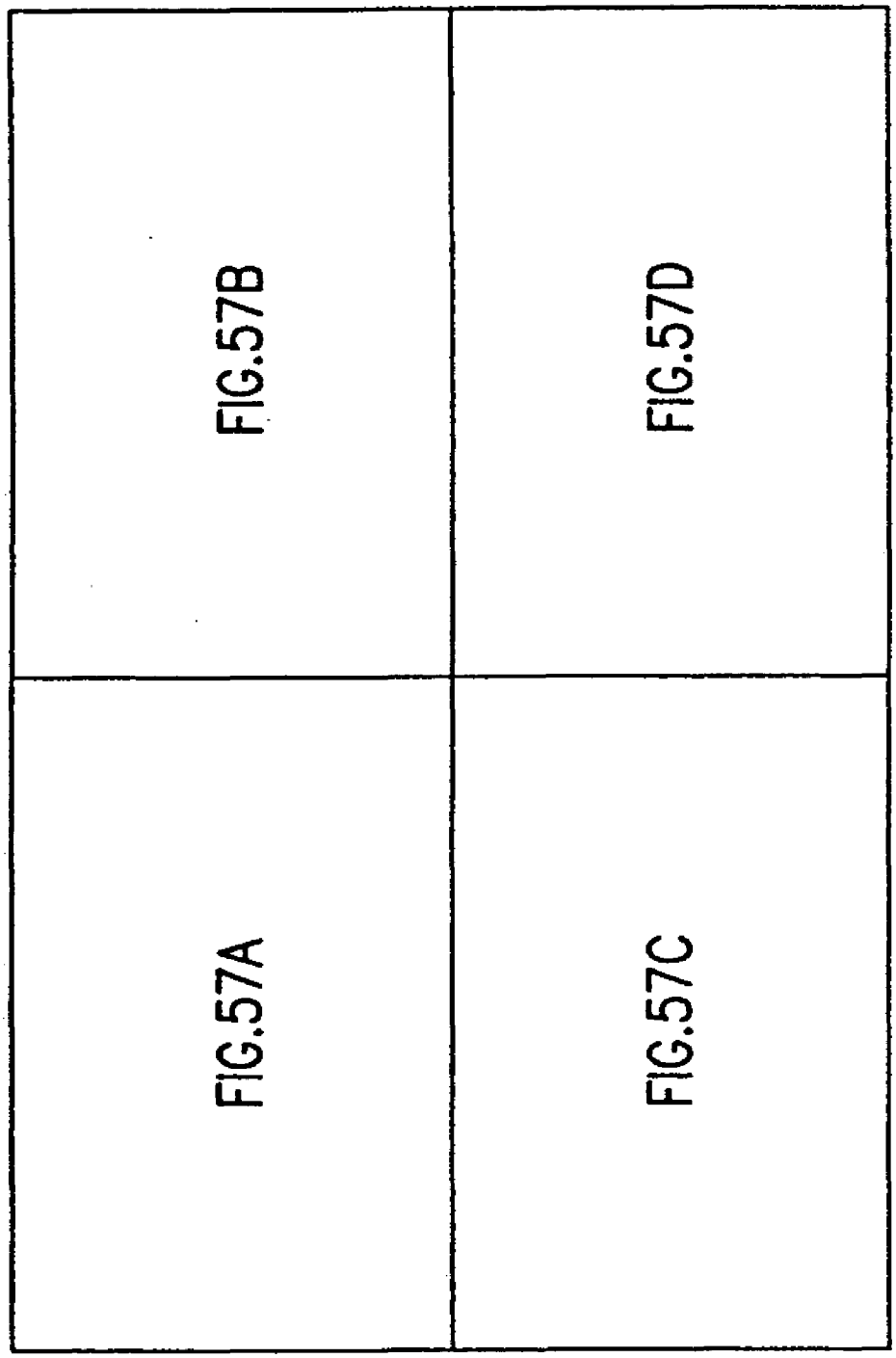

FIG.57

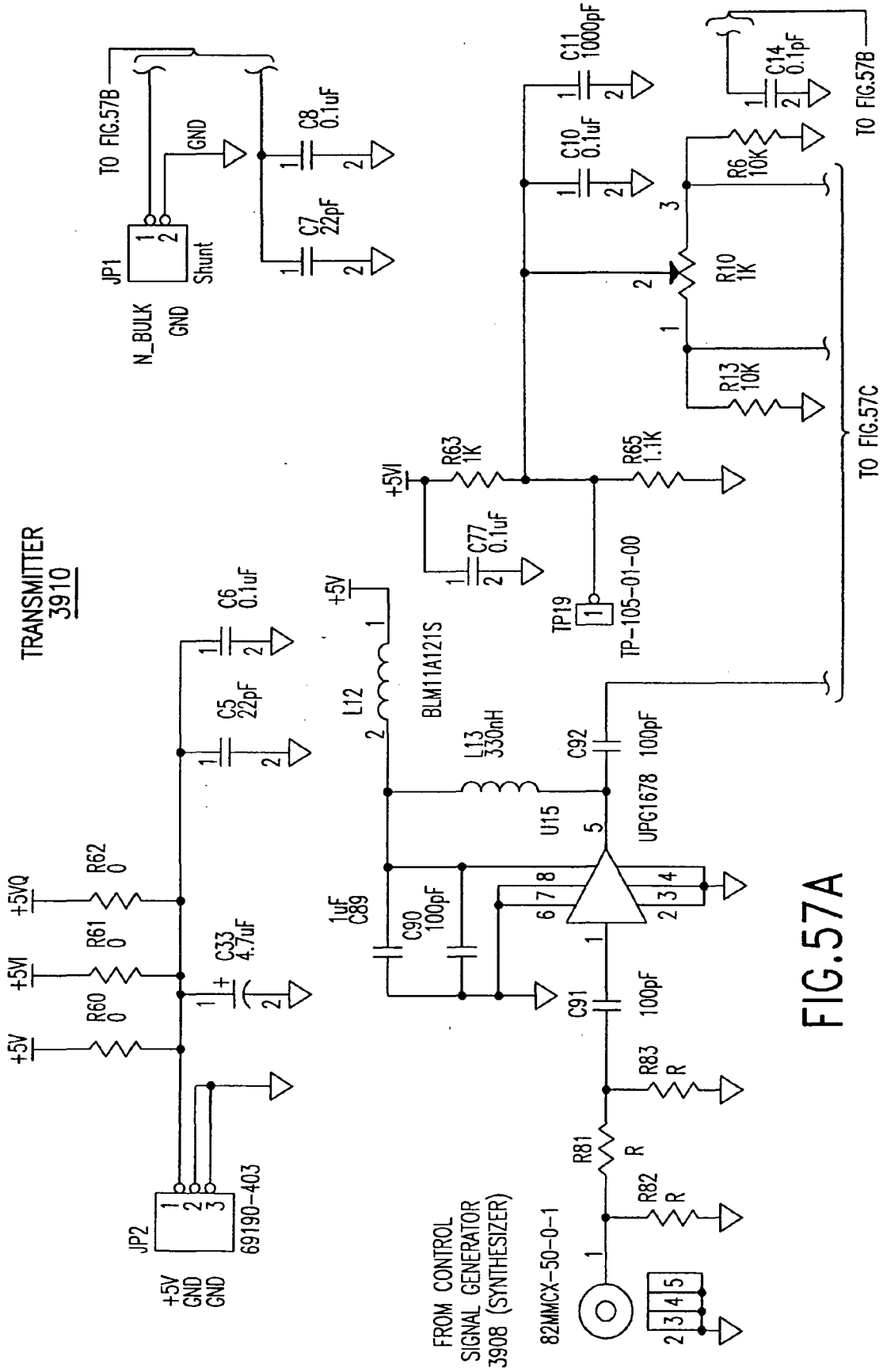
TRANSMITTER
3910
TO FIG.57B
JP1
Shunt
N_BULK
GND
GND
C8
0.1uF
C7
22pF
C11
1000pF
C10
0.1uF
C14
0.1pF
R6
10K
R10
1K
R13
10K
TO FIG.57C
R63
1K
R65
1.1K
+5VI
C77
0.1uF
TP19
TP-105-01-00
+5V
L12
BLM11A121S
L13
330nH
C92
100pF
U15
UPG1678
C6
0.1uF
C5
22pF
C33
4.7uF
R62
0
R61
0
R60
0
+5VQ
+5VI
+5V
1uF
C89
C90
100pF
C91
100pF
R83
R
R81
R
R82
R
JP2
69190-403
+5V
GND
GND
FROM CONTROL
SIGNAL GENERATOR
3908 (SYNTHESIZER)
82MMCX-50-0-1

FIG.57A

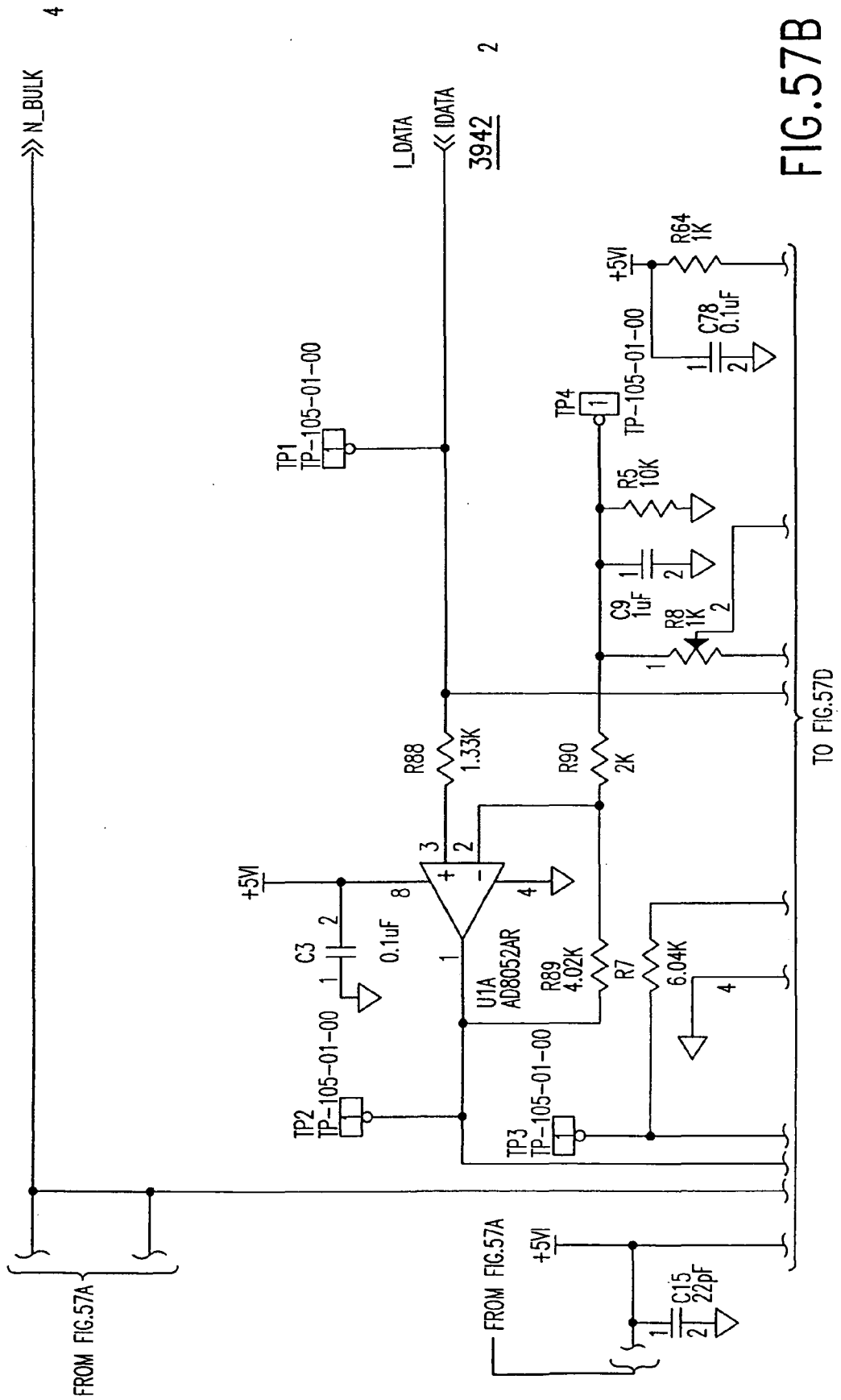
N_BULK
4
I_DATA
IDATA
2
3942
TP1
TP-105-01-00
TP2
TP-105-01-00
TP3
TP-105-01-00
TP4
TP-105-01-00
+5VI
C3
0.1uF
R88
1.33K
R90
2K
U1A
AD8052AR
R89
4.02K
R7
6.04K
R5
10K
C9
1uF
R8
1K
R64
1K
C78
0.1uF
C15
22pF
FROM FIG.57A
FROM FIG.57A
TO FIG.57D

FIG.57B

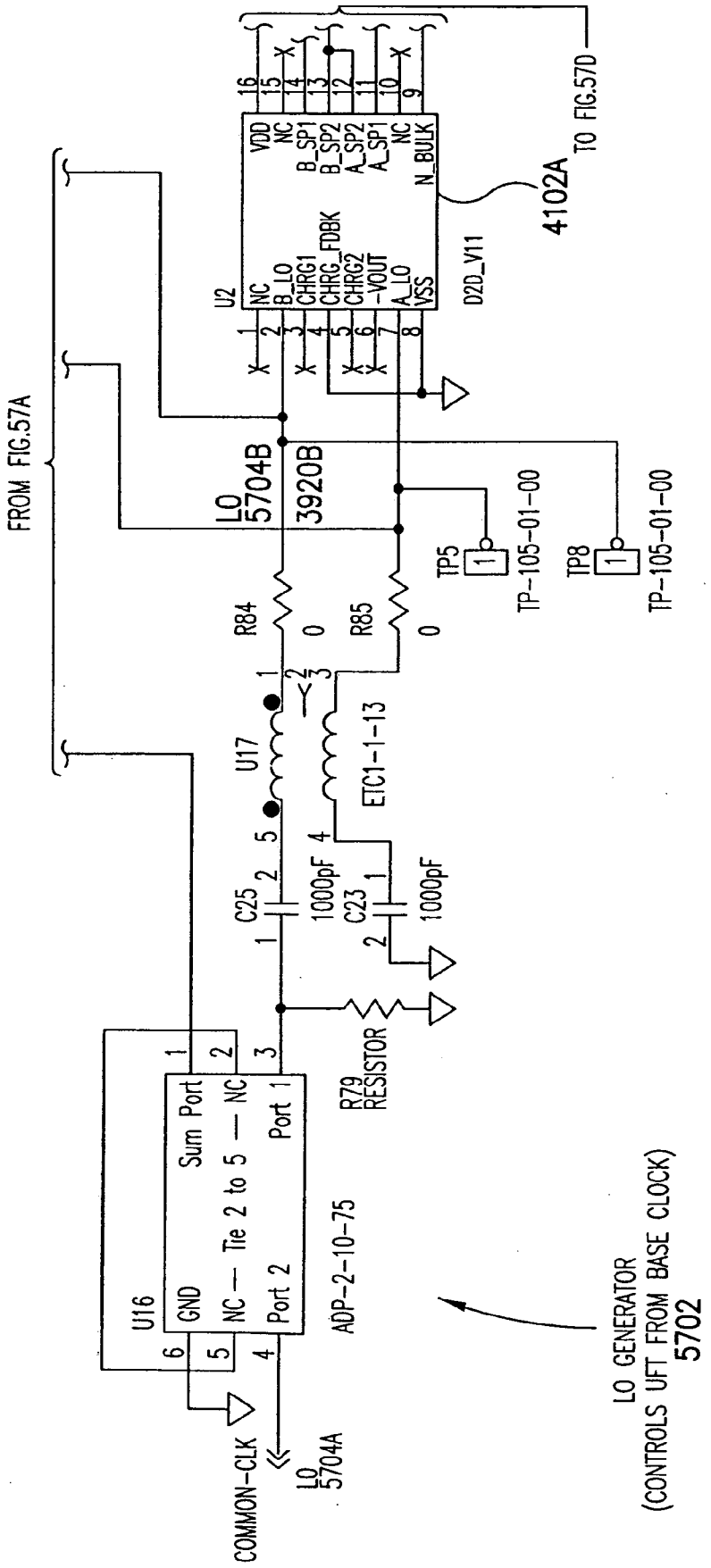
FROM FIG.57A
U2
NC
B_LO
CHRG1
CHRG_FDBK
CHRG2
-VOUT
A_LO
VSS
VDD
NC
B_SP1
B_SP2
A_SP1
A_SP2
NC
N_BULK
D2D_V11
4102A
TO FIG.57D
LO
5704B
3920B
TP5
TP-105-01-00
TP8
TP-105-01-00
R84
R85
U17
ETC1-1-13
C25
1000pF
C23
1000pF
R79
RESISTOR
U16
GND
NC — Tie 2 to 5 — NC
Port 2
Sum Port
Port 1
ADP-2-10-75
COMMON-CLK
LO
5704A
LO GENERATOR
(CONTROLS UFT FROM BASE CLOCK)
5702

FIG.57C

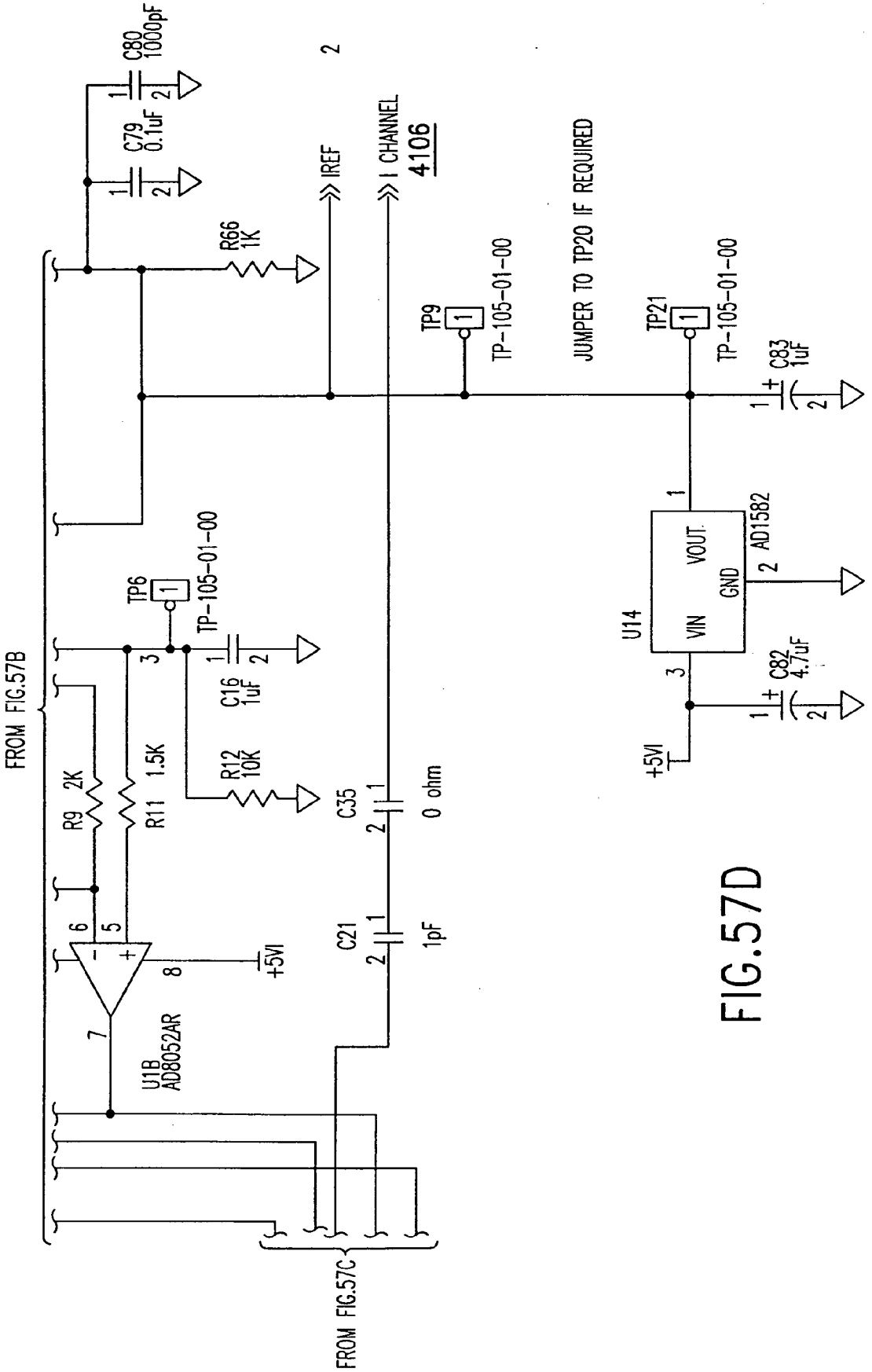
FROM FIG.57B
C80
1000pF
C79
0.1uF
R66
1K
IREF
I CHANNEL
4106
TP9
TP-105-01-00
JUMPER TO TP20 IF REQUIRED
TP21
TP-105-01-00
C83
1uF
U14
VIN
VOUT
GND
AD1582
C82
4.7uF
+5VI
TP6
TP-105-01-00
C16
1uF
R12
10K
R9
2K
R11
1.5K
C35
0 ohm
C21
1pF
U1B
AD8052AR
+5VI
FROM FIG.57C

FIG.57D

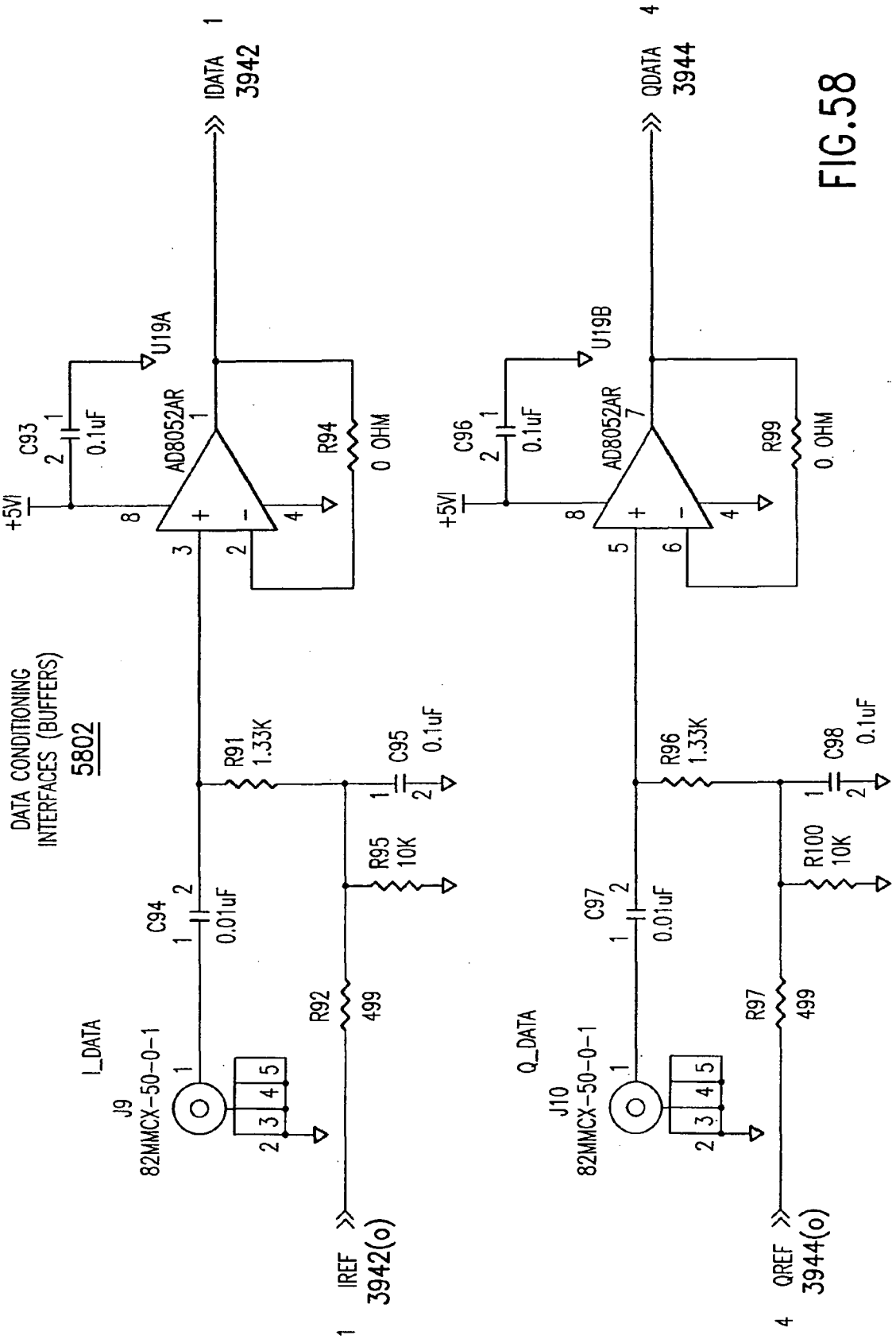
DATA CONDITIONING
INTERFACES (BUFFERS)
5802
+5VI
C93
0.1uF
U19A
AD8052AR
IDATA
3942
R94
0 OHM
R91
1.33K
C95
0.1uF
R95
10K
C94
0.01uF
R92
499
I_DATA
J9
82MMCX-50-0-1
IREF
3942(o)
+5VI
C96
0.1uF
U19B
AD8052AR
QDATA
3944
R99
0 OHM
R96
1.33K
C98
0.1uF
R100
10K
C97
0.01uF
R97
499
Q_DATA
J10
82MMCX-50-0-1
QREF
3944(o)

FIG.58

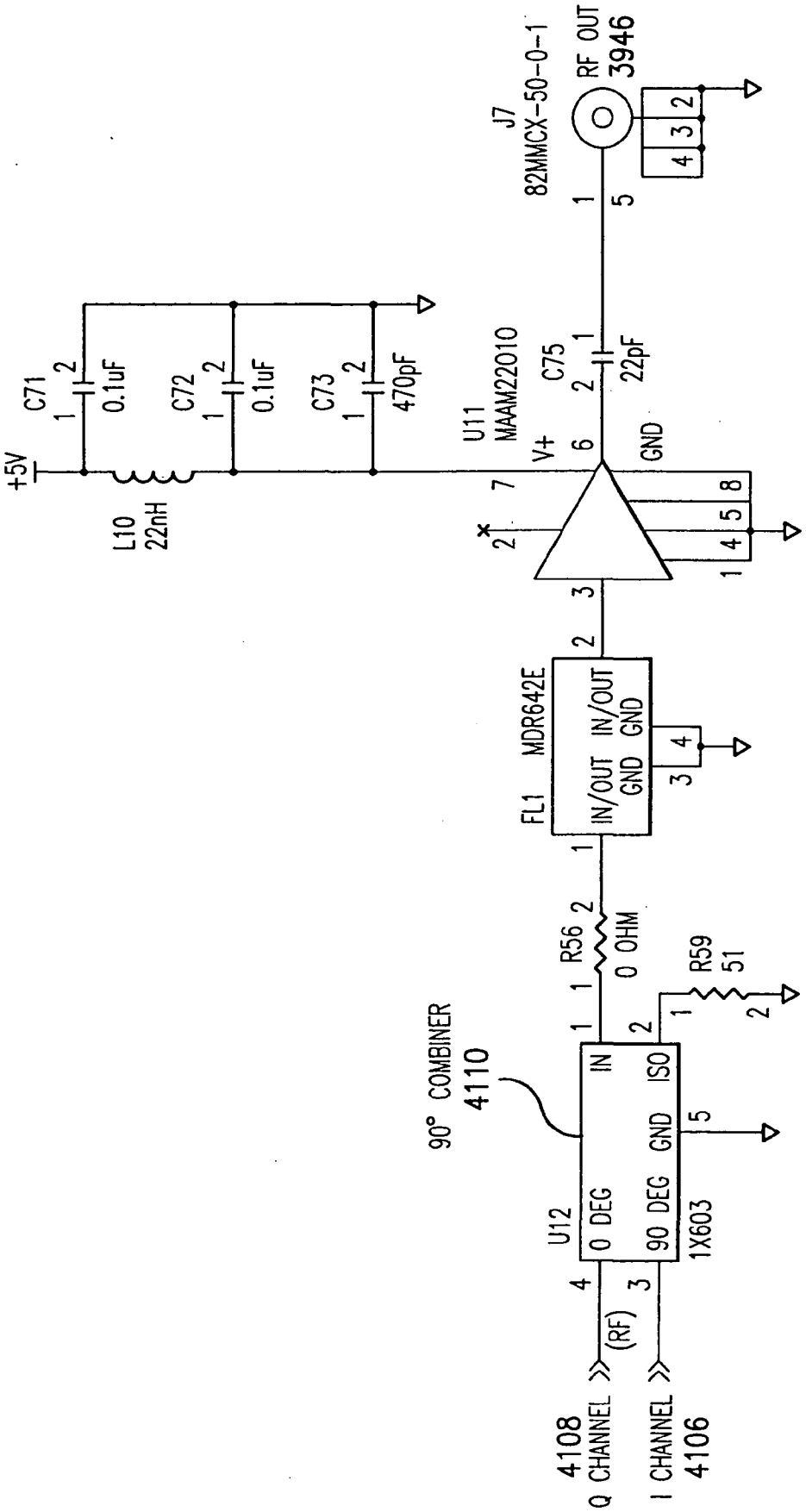
+5V
L10
22nH
C71
0.1uF
C72
0.1uF
C73
470pF
U11
MAAM22010
V+
GND
C75
22pF
J7
82MMCX-50-0-1
RF OUT
3946
FL1
MDR642E
IN/OUT
GND
R56
0 OHM
R59
51
90° COMBINER
4110
U12
0 DEG
90 DEG
IN
ISO
GND
1X603
(RF)
4108
Q CHANNEL
I CHANNEL
4106

FIG.59

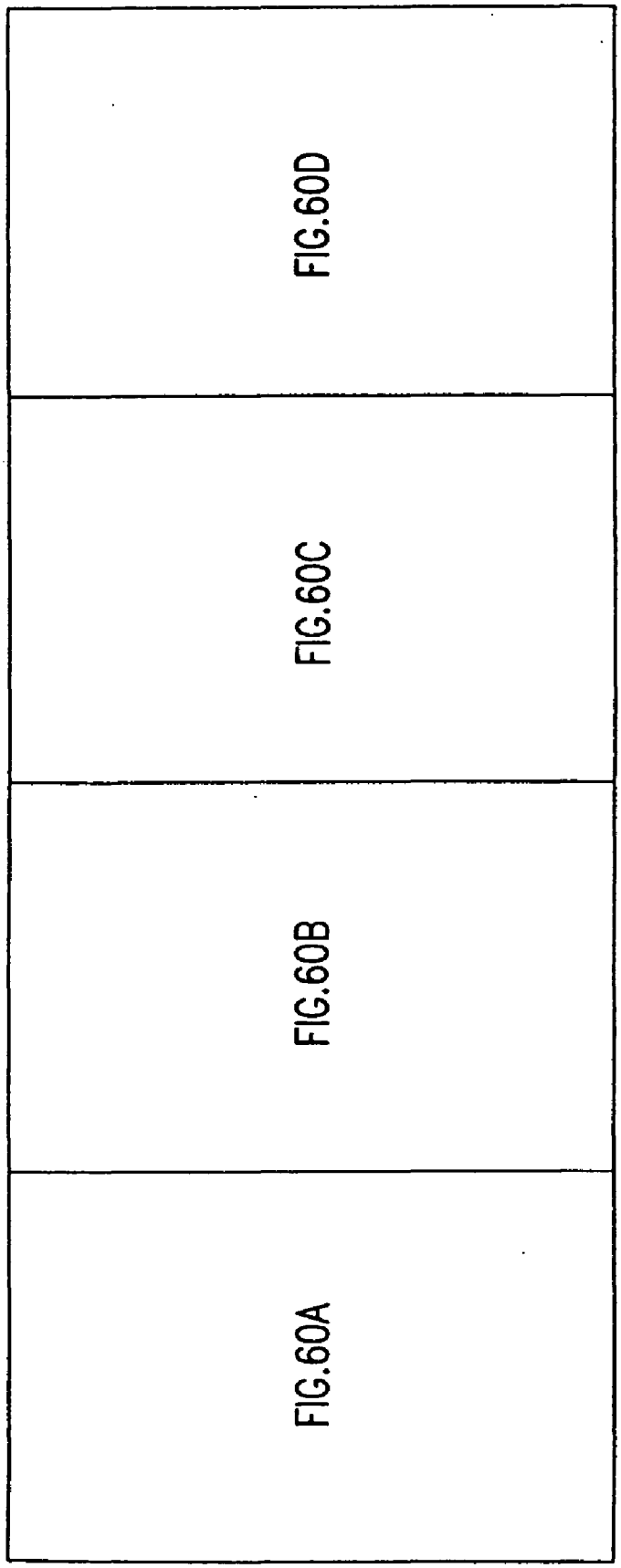

FIG.60

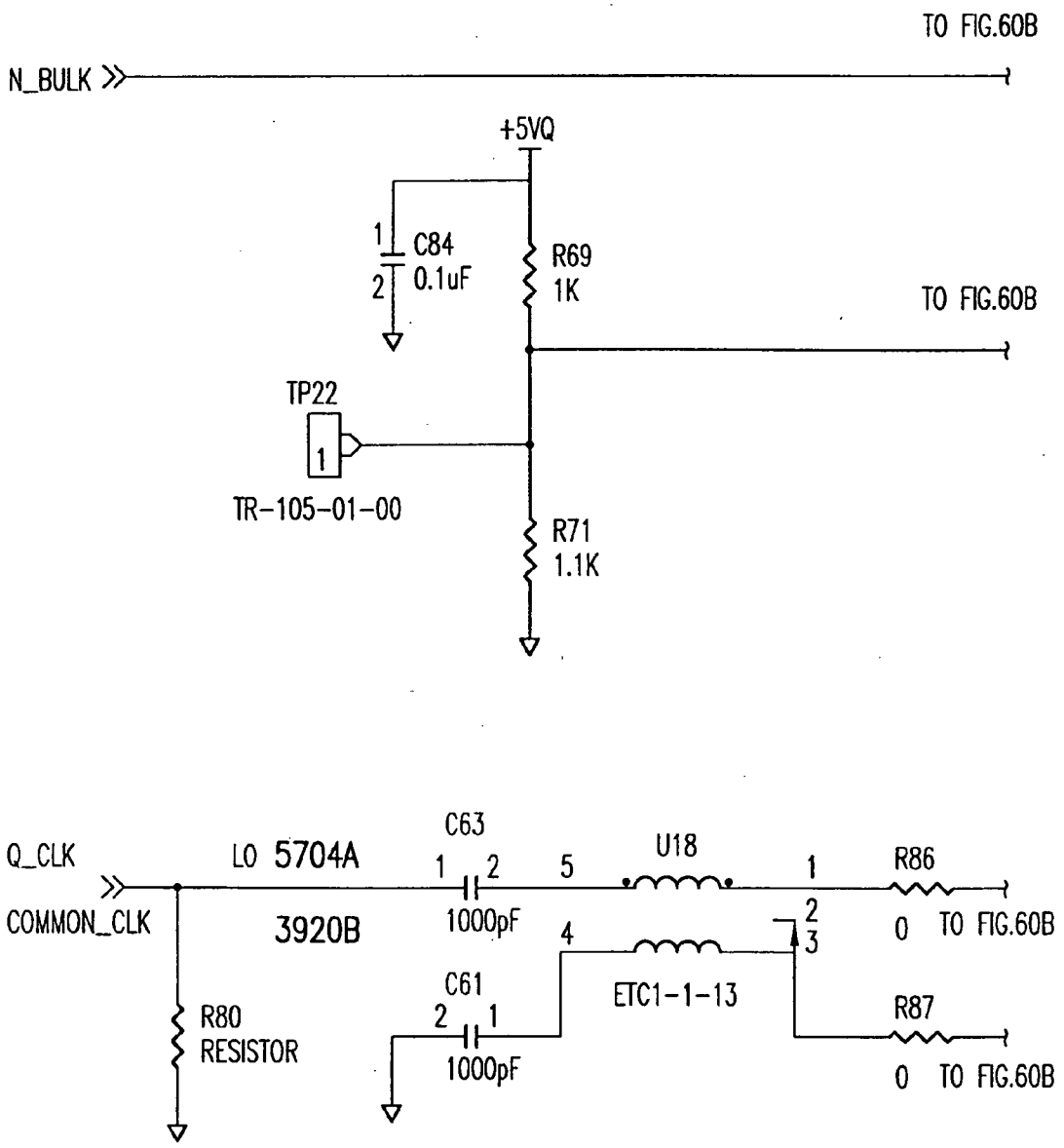
TO FIG.60B
N_BULK
+5VQ
C84
0.1uF
R69
1K
TO FIG.60B
TP22
TR-105-01-00
R71
1.1K
Q_CLK
COMMON_CLK
LO 5704A
3920B
C63
1000pF
U18
R86
0 TO FIG.60B
ETC1-1-13
C61
1000pF
R80
RESISTOR
R87
0 TO FIG.60B

FIG.60A

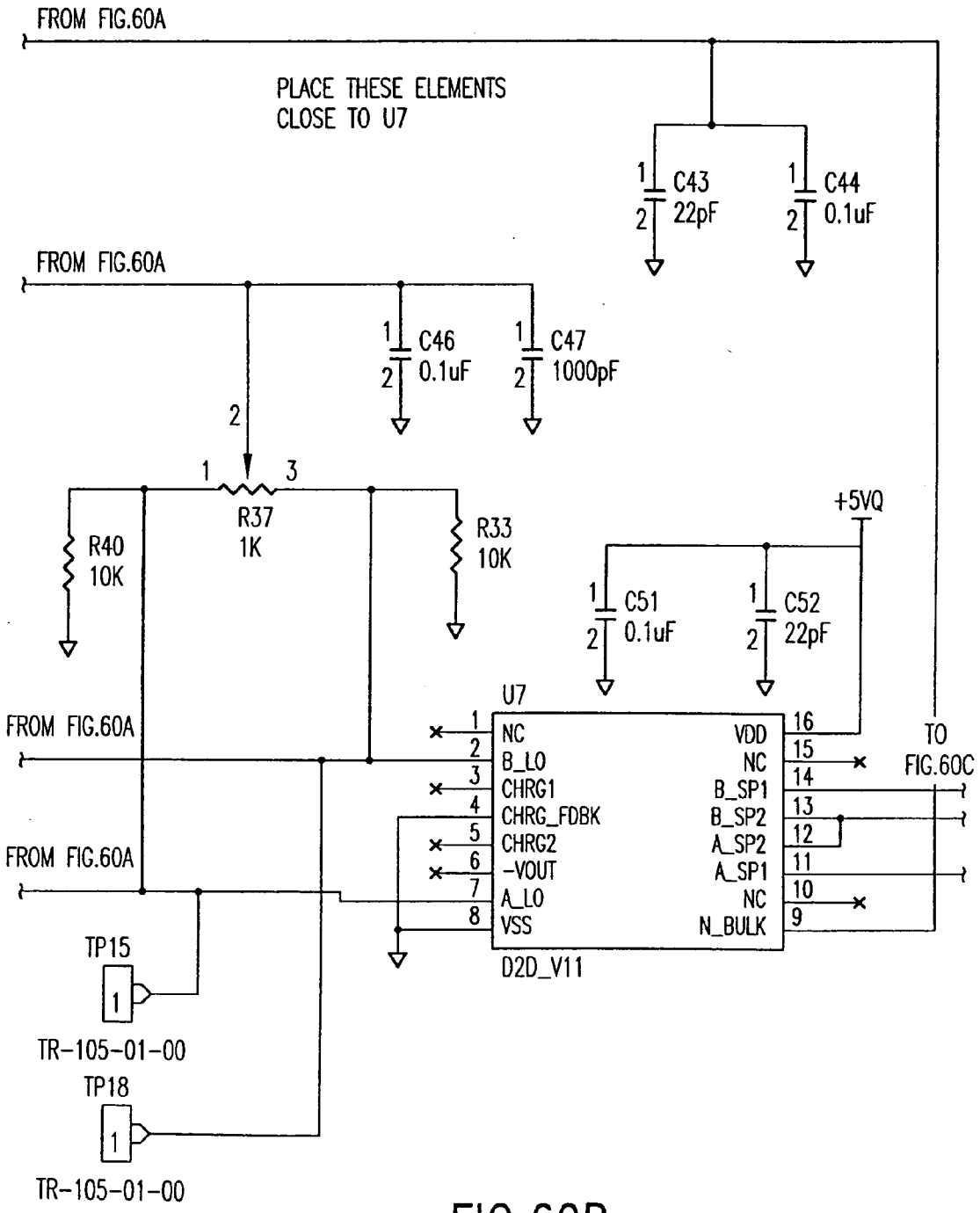
FROM FIG.60A
PLACE THESE ELEMENTS
CLOSE TO U7
C43
22pF
C44
0.1uF
FROM FIG.60A
C46
0.1uF
C47
1000pF
R37
1K
R40
10K
R33
10K
+5VQ
C51
0.1uF
C52
22pF
U7
FROM FIG.60A
NC
B_LO
CHRG1
CHRG_FDBK
CHRG2
-VOUT
A_LO
VSS
VDD
NC
B_SP1
B_SP2
A_SP2
A_SP1
NC
N_BULK
TO
FIG.60C
FROM FIG.60A
D2D_V11
TP15
TR-105-01-00
TP18
TR-105-01-00

FIG.60B

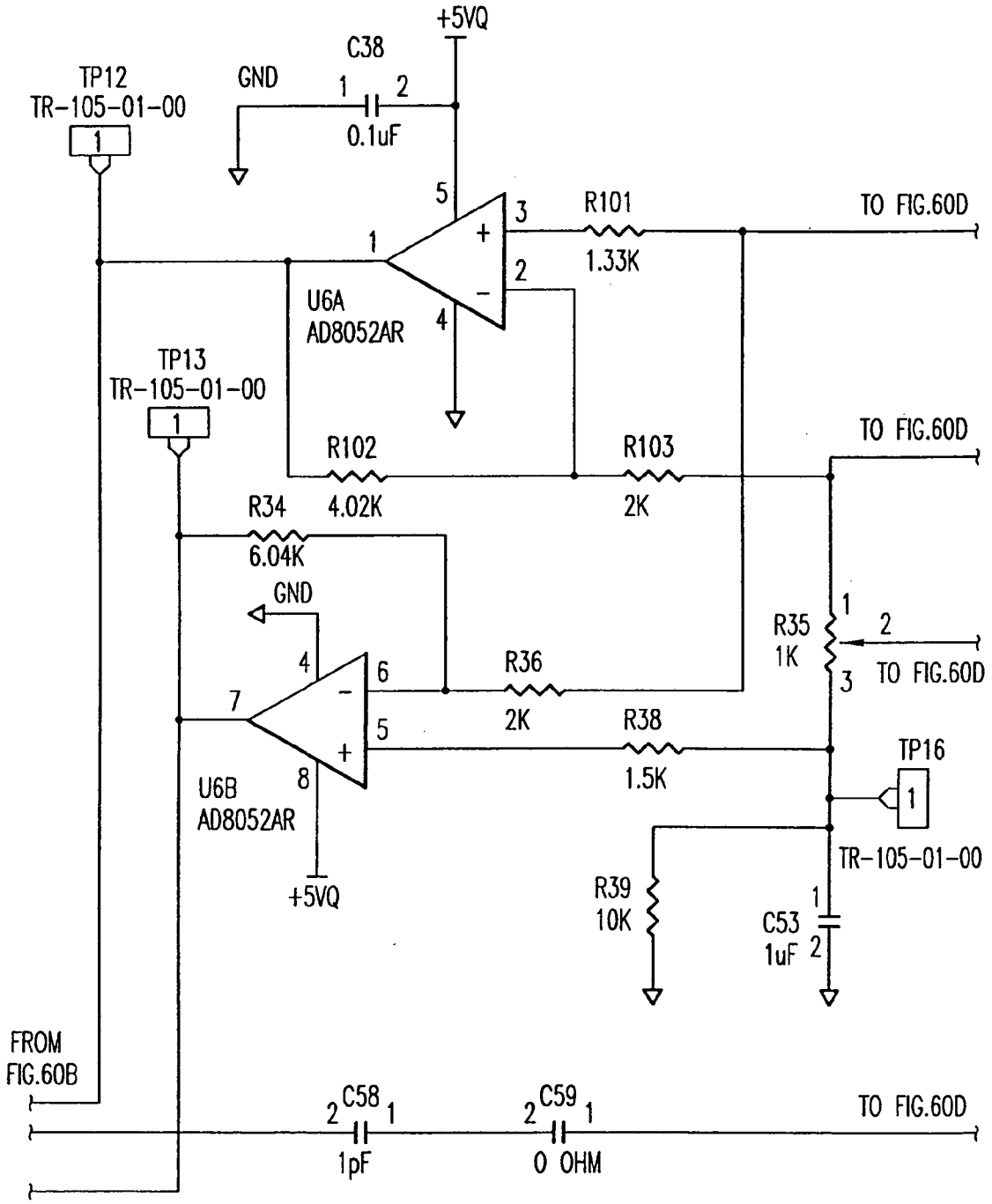
+5VQ
C38
TP12
TR-105-01-00
GND
1
2
0.1uF
5
3
R101
TO FIG.60D
1
+
1.33K
2
U6A
AD8052AR
4
TP13
TR-105-01-00
1
R102
R103
TO FIG.60D
R34
4.02K
2K
6.04K
GND
R35
1K
1
2
4
6
R36
TO FIG.60D
3
7
2K
R38
5
+
TP16
1.5K
8
U6B
AD8052AR
1
TR-105-01-00
+5VQ
R39
10K
1
C53
1uF
2
FROM
FIG.60B
2 C58 1
2 C59 1
TO FIG.60D
1pF
0 OHM

FIG.60C

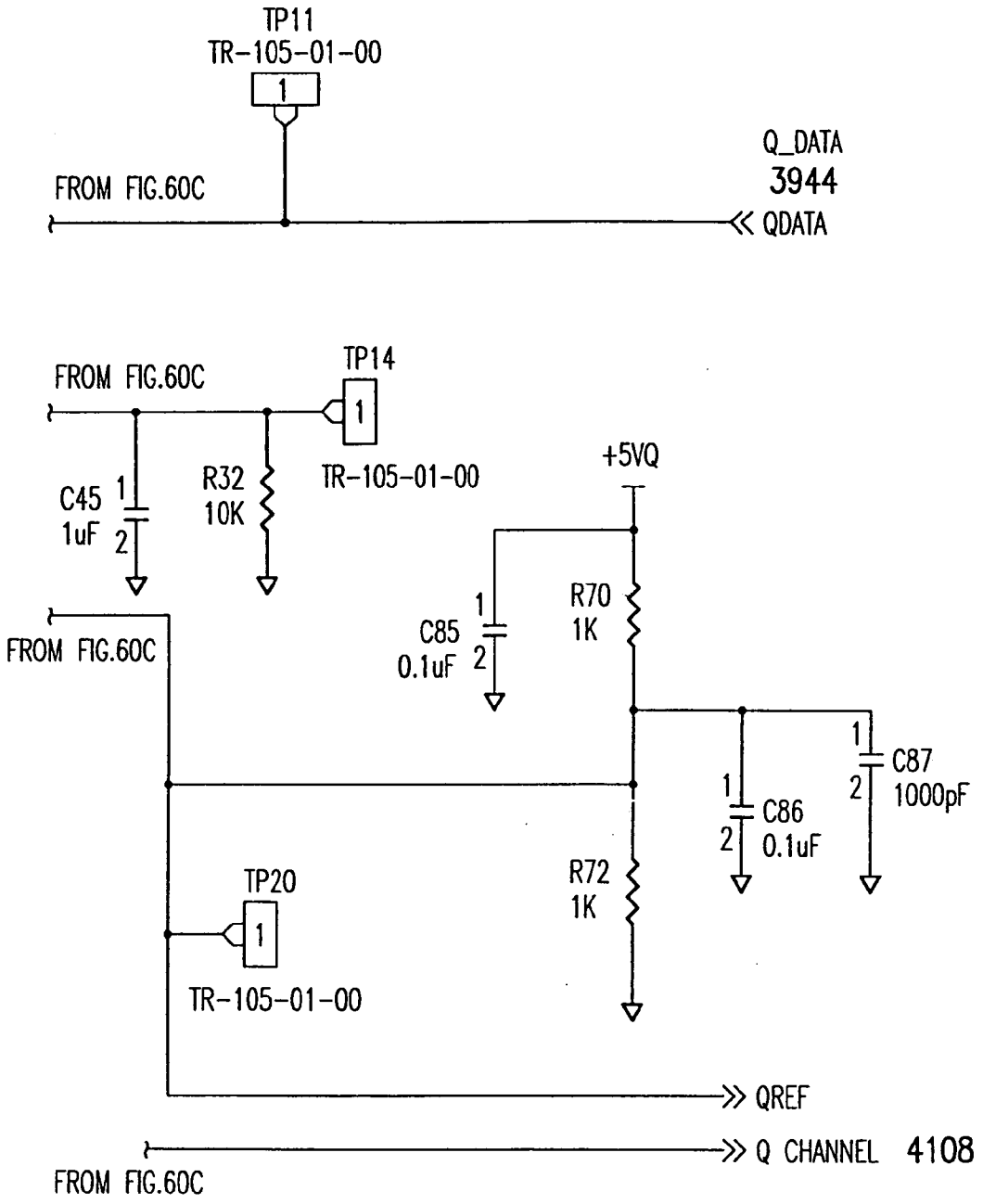
TP11
TR-105-01-00
1
Q_DATA
3944
FROM FIG.60C
QDATA
FROM FIG.60C
TP14
1
TR-105-01-00
+5VQ
C45
1uF
1
2
R32
10K
C85
0.1uF
1
2
R70
1K
FROM FIG.60C
C87
1000pF
1
2
C86
0.1uF
1
2
R72
1K
TP20
1
TR-105-01-00
QREF
Q CHANNEL
4108
FROM FIG.60C

FIG.60D

ITEM	QTY	REFERENCE	PART	PART NUMBER	MANUFACTURER
1	21	C3,C6,C8,C10,C14,C38,C44,	0.1uF	GRM39X7R104K016	MURATA
		C46,C51,C71,C72,C77,C78,			
		C79,C84,C85,C86,C93,C95,			
		C96,C98			
2	6	C5,C7,C15,C43,C52,C75	22pF	GRM39C0G220J050	MURATA
3	5	C9,C16,C45,C53,C89	1uF	GRM40Y5V105Z016	MURATA
4	8	C11,C23,C25,C47,C61,C63	1000pF	GRM39X7R102K050	MURATA
		C80,C87			
5	2	C58,C21	1pF	GRM39C0G010B50V	MURATA
6	2	C82,C33	4.7uF	T491A475K006AS	KEMET
7	2	C59,C35	0 ohm	GRM39C0Gxxxx50V	MURATA
8	1	C73	470pF	GRM39C0G471J050	MURATA
9	1	C83	1uF	T491A105M016AS	KEMET
10	3	C90,C91,C92	100pF	ECU-V1H101JCV	
11	2	C94,C97	0.01uF	GRM39X7R103K016	MURATA
12	1	FL1	MDR642E	MDR642E	SOSHIN
13	1	JP1	Shunt	69190-402	BERG
14	1	JP2	69190-403	69190-403	BERG
15	4	J7,J8,J9,J10	82MMCX-50-0-1	82MMCX-50-0-1	SUHNER
16	1	L10	22nH	LL1608-F22NK	COILCRAFT
17	1	L12	BLM11A121S	BLM11A121S	MURATA
18	1	L13	330nH	LL2012-FR33K	
19	10	R5,R6,R12,R13,R32,R33,	10K	ERJ3EKF1002	PANASONIC
		R39,R40,R95,R100			
20	2	R34,R7	6.04K	ERJ3EKF6041	PANASONIC
21	4	R8,R10,R35,R37	1K	3224W-1-102	BOUMS
22	4	R9,R36,R90,R103	2K	ERJ3EKF2001	PANASONIC
23	2	R38,R11	1.5K	ERJ3EKF1501	PANASONIC
24	3	R56,R94,R99	0 ohm	ERJ3GSY0R00	PANASONIC

FIG.61A

25	1	R59	51	ERJ3GSYJ510	PANASONIC
26	7	R60,R61,R62,R84,R85,R86,	0	ERJ3GSY0R00	PANASONIC
		R87			
27	6	R63,R64,R66,R69,R70,R72	1K	ERJ3EKF1001	PANASONIC
28	2	R71,R65	1.1K	ERJ3EKF1101	PANASONIC
29	2	R80,R79	RESISTOR		
30	3	R81,R82,R83	R		
31	4	R88,R91,R96,R101	1.33K	ERJ3EKF1331	PANASONIC
32	2	R102,R89	4.02K	ERJ3EKF4021	PANASONIC
33	2	R92,R97	499	ERJ3EKF4990	PANASONIC
34	19	TP1,TP2,TP3,TP4,TP5,TP6,	TP-105-01-00		
		TP8,TP9,TP11,TP12,TP13,			
		TP14,TP15,TP16,TP18,TP19,			
		TP20,TP21,TP22			
35	3	U1,U6,U19	AD8052AR	AD8052AR	ANALOG DEVICES
36	2	U7,U2	D2D_V11	D2D_V11	PARKER VISION
37	1	U11	MAAM22010	MAAM22010	MACOM
38	1	U12	1X603	1X603	ANAREN
39	1	U14	AD1582	AD1582	ANALOG DEVICES
40	1	U15	UPG1678	UPG1678GV	NEC
41	1	U16	ADP-2-10-75	ADP-2-10-75	MINI-CIRCUITS
42	1		BOARD	8500.641.021	V05.10

FIG.61B

FIG.62A	FIG.62B
FIG.62C	FIG.62D
FIG.62E	FIG.62F
FIG.62G	FIG.62H
FIG.62I	

FIG. 62

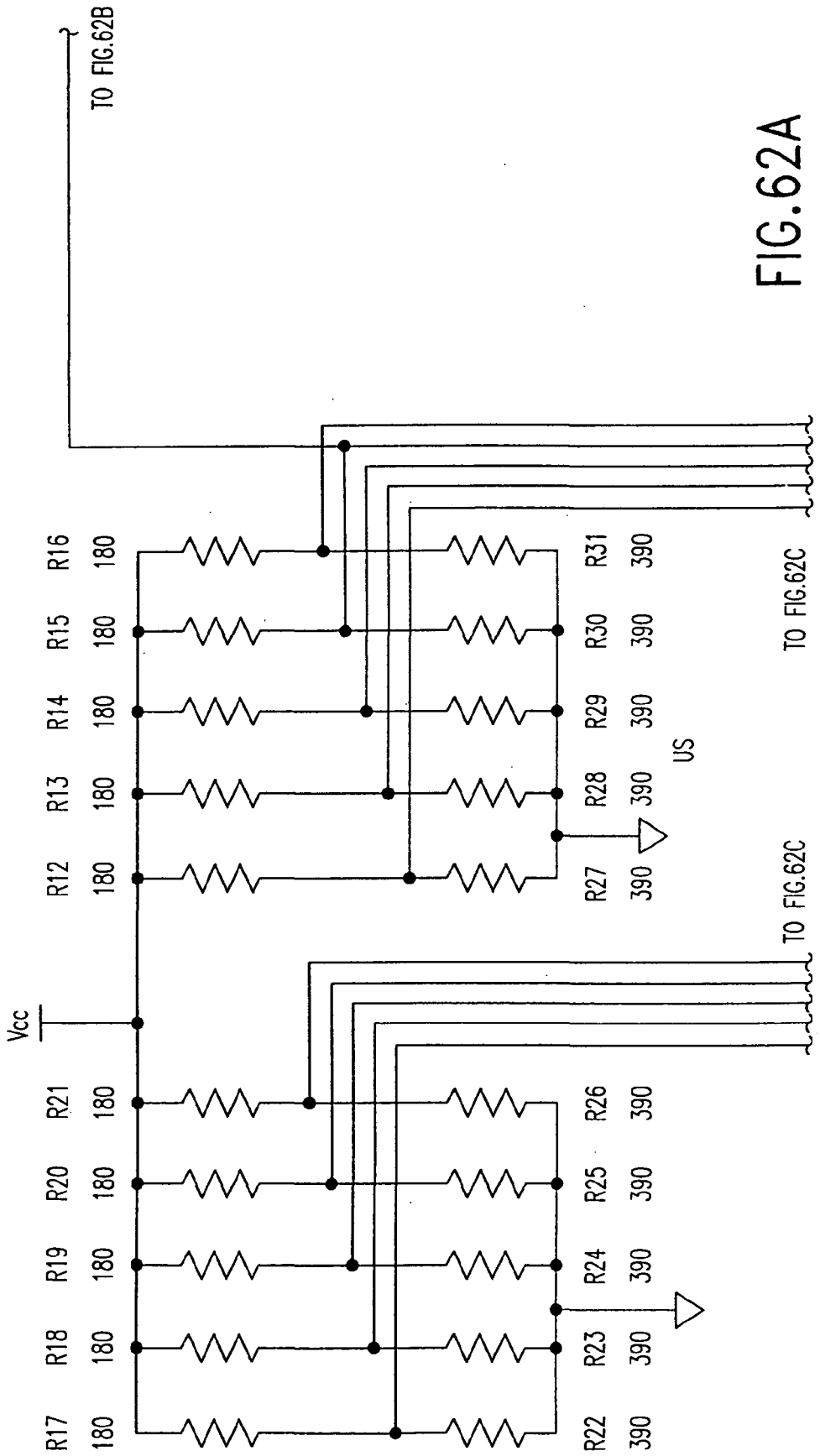
TO FIG.62B
Vcc
R12 180
R13 180
R14 180
R15 180
R16 180
R17 180
R18 180
R19 180
R20 180
R21 180
R22 390
R23 390
R24 390
R25 390
R26 390
R27 390
R28 390
R29 390
R30 390
R31 390
US
TO FIG.62C
TO FIG.62C

FIG.62A

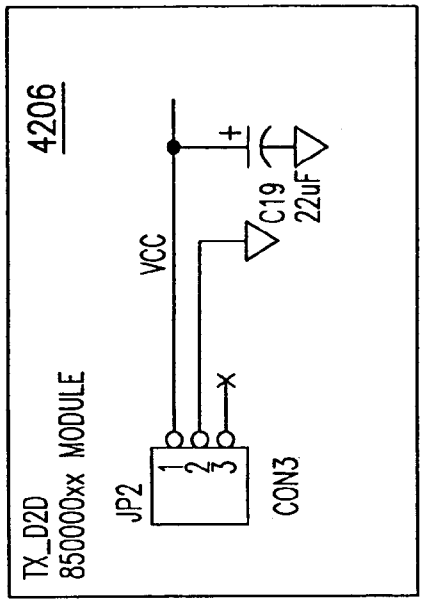
TX_D2D
850000xx MODULE
4206
JP2
1
2
3
CON3
VCC
C19
22uF

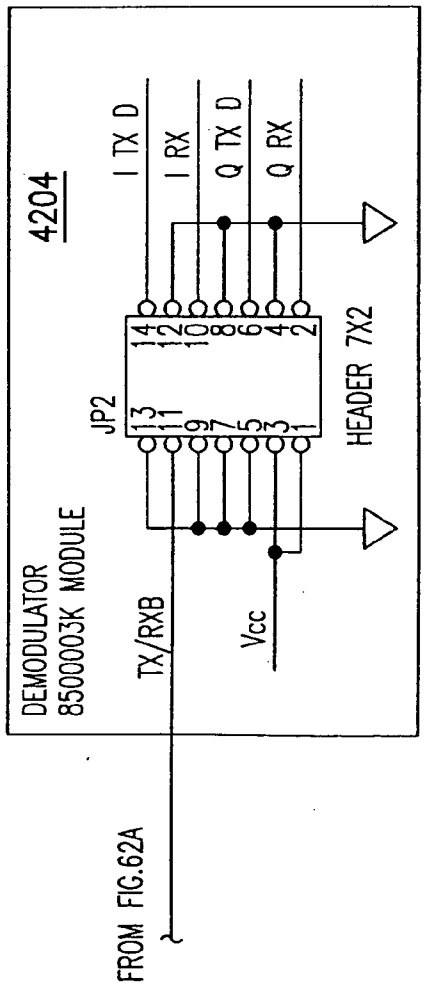
DEMODULATOR
8500003K MODULE
4204
TX/RXB
JP2
13
11
9
7
5
3
1
14
12
10
8
6
4
2
I TX D
I RX
Q TX D
Q RX
HEADER 7X2
Vcc
FROM FIG.62A

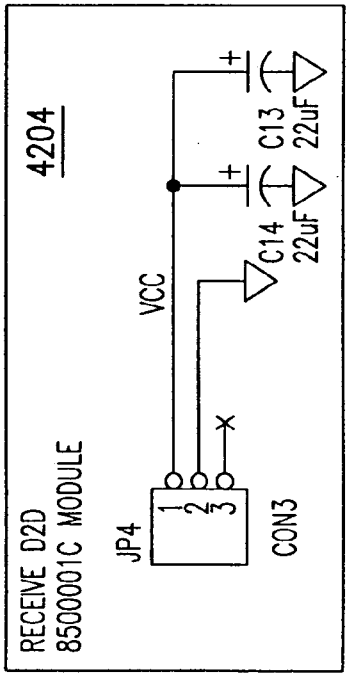
RECEIVE D2D
8500001C MODULE
4204
JP4
1
2
3
CON3
VCC
C14
22uF
C13
22uF

FIG.62B

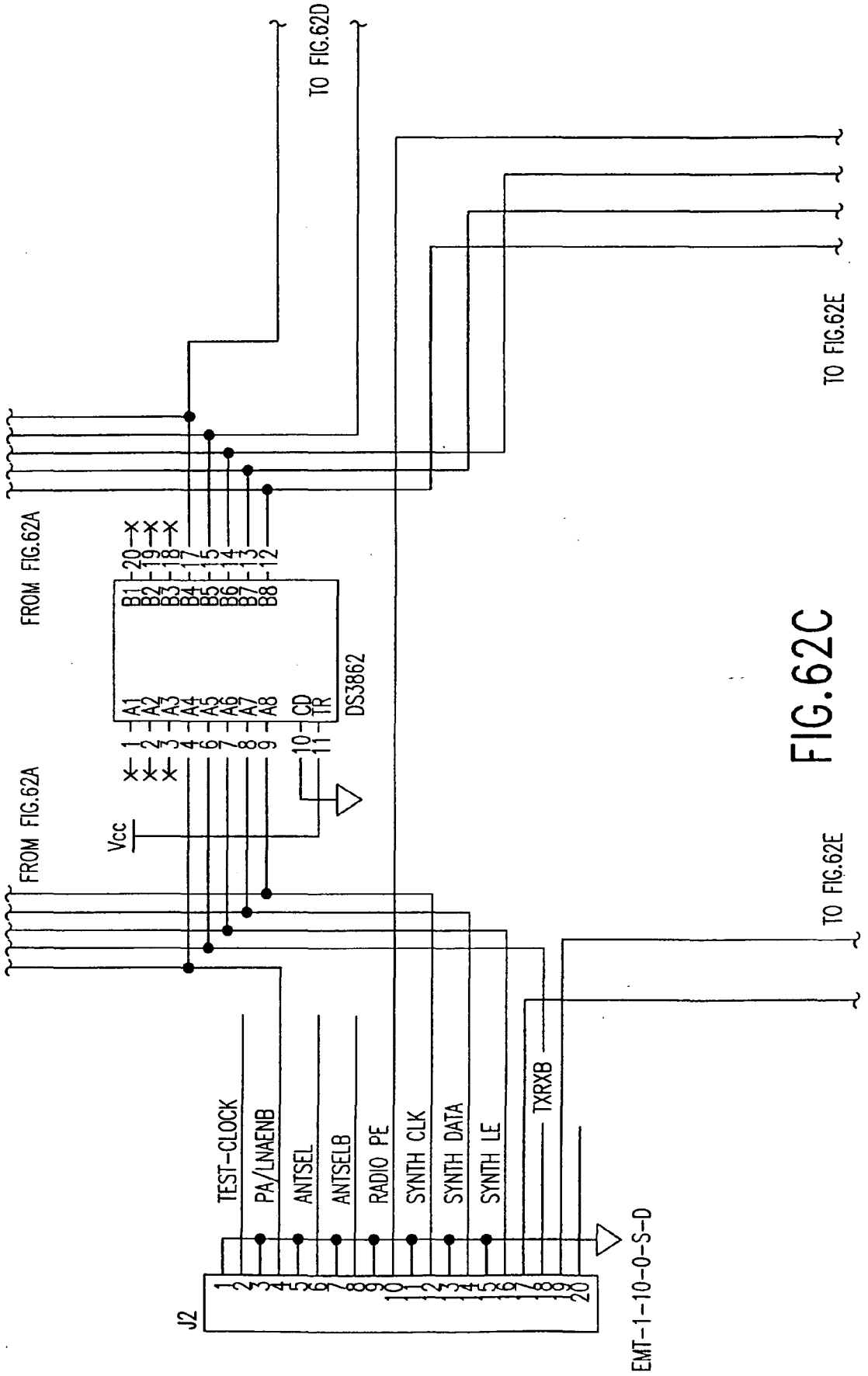
TO FIG.62D
TO FIG.62E
FROM FIG.62A
FROM FIG.62A
B1 B2 B3 B4 B5 B6 B7 B8
A1 A2 A3 A4 A5 A6 A7 A8 CD TR
DS3862
Vcc
TO FIG.62E
TEST-CLOCK
PA/LNAENB
ANTSEL
ANTSELB
RADIO PE
SYNTH CLK
SYNTH DATA
SYNTH LE
TXRXB
J2
EMT-1-10-0-S-D

FIG.62C

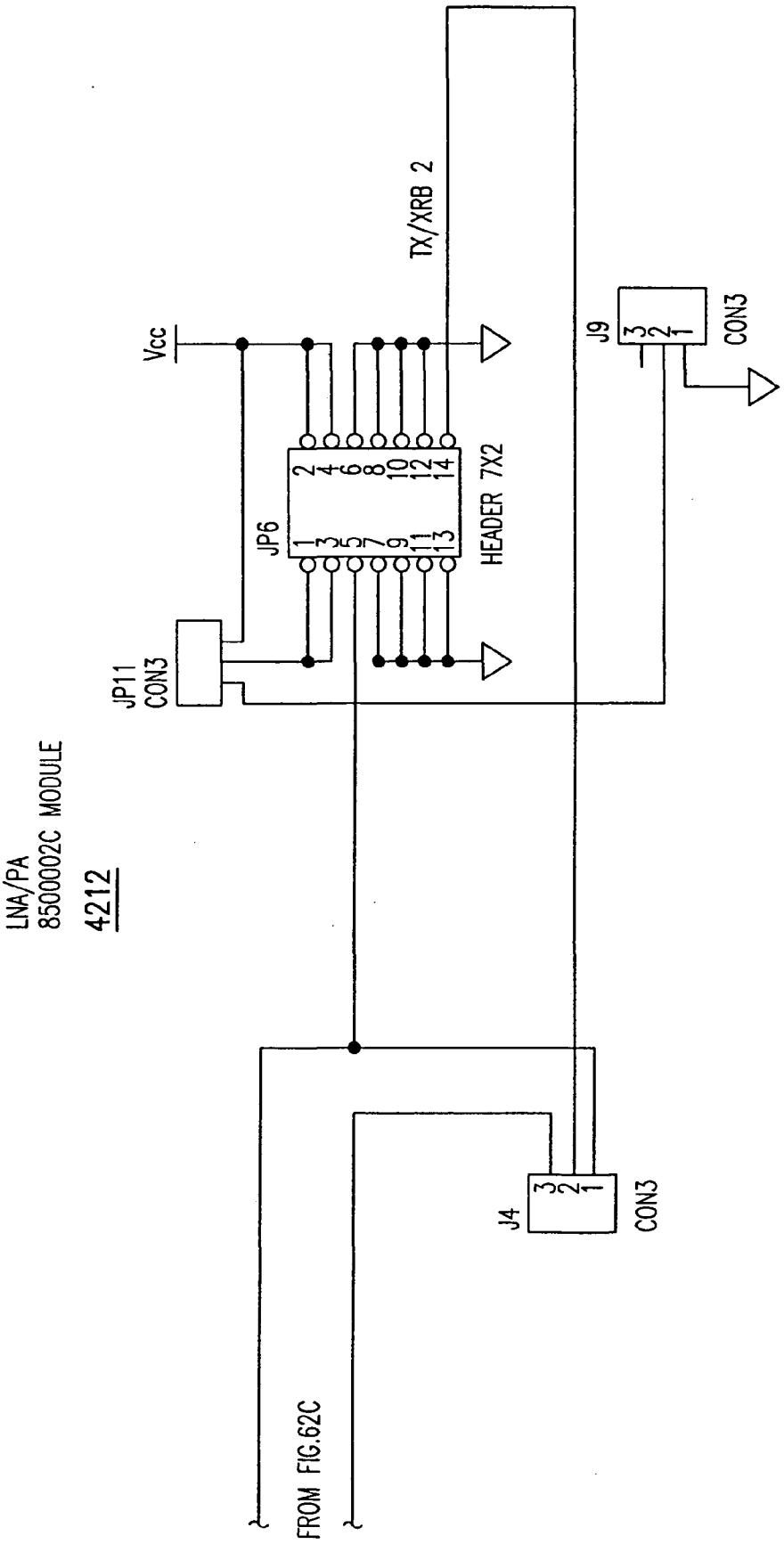
LNA/PA
8500002C MODULE
4212
JP11
CON3
Vcc
JP6
HEADER 7X2
TX/XRB 2
J9
CON3
J4
CON3
FROM FIG.62C

FIG.62D

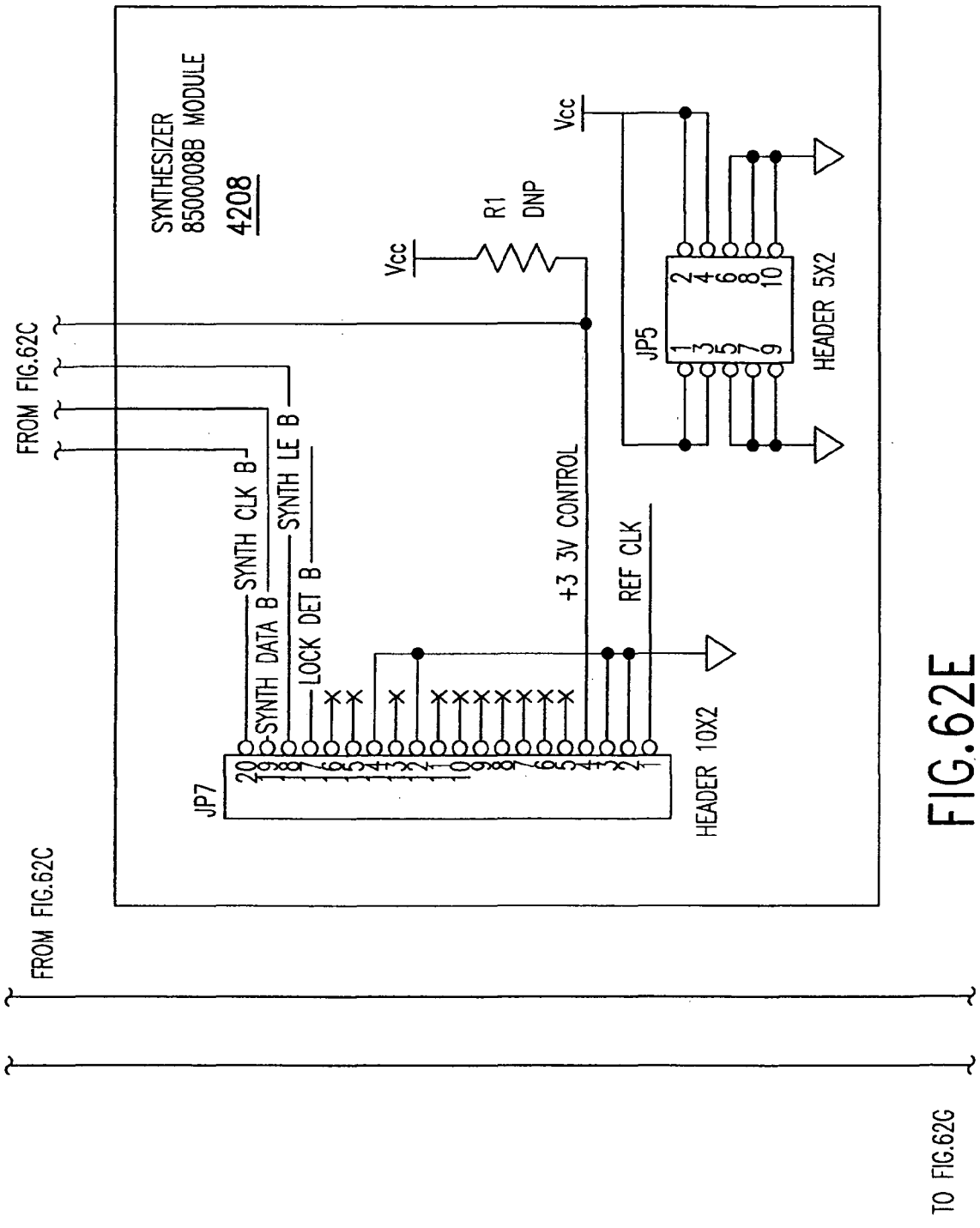
FROM FIG.62C
FROM FIG.62C
SYNTHESIZER
8500008B MODULE
4208
SYNTH CLK B
SYNTH LE B
SYNTH DATA B
LOCK DET B
JP7
20
19
18
17
16
15
14
13
12
11
10
9
8
7
6
5
4
3
2
1
HEADER 10X2
+3 3V CONTROL
REF CLK
Vcc
R1
DNP
Vcc
JP5
1
3
5
7
9
2
4
6
8
10
HEADER 5X2
TO FIG.62G

FIG.62E

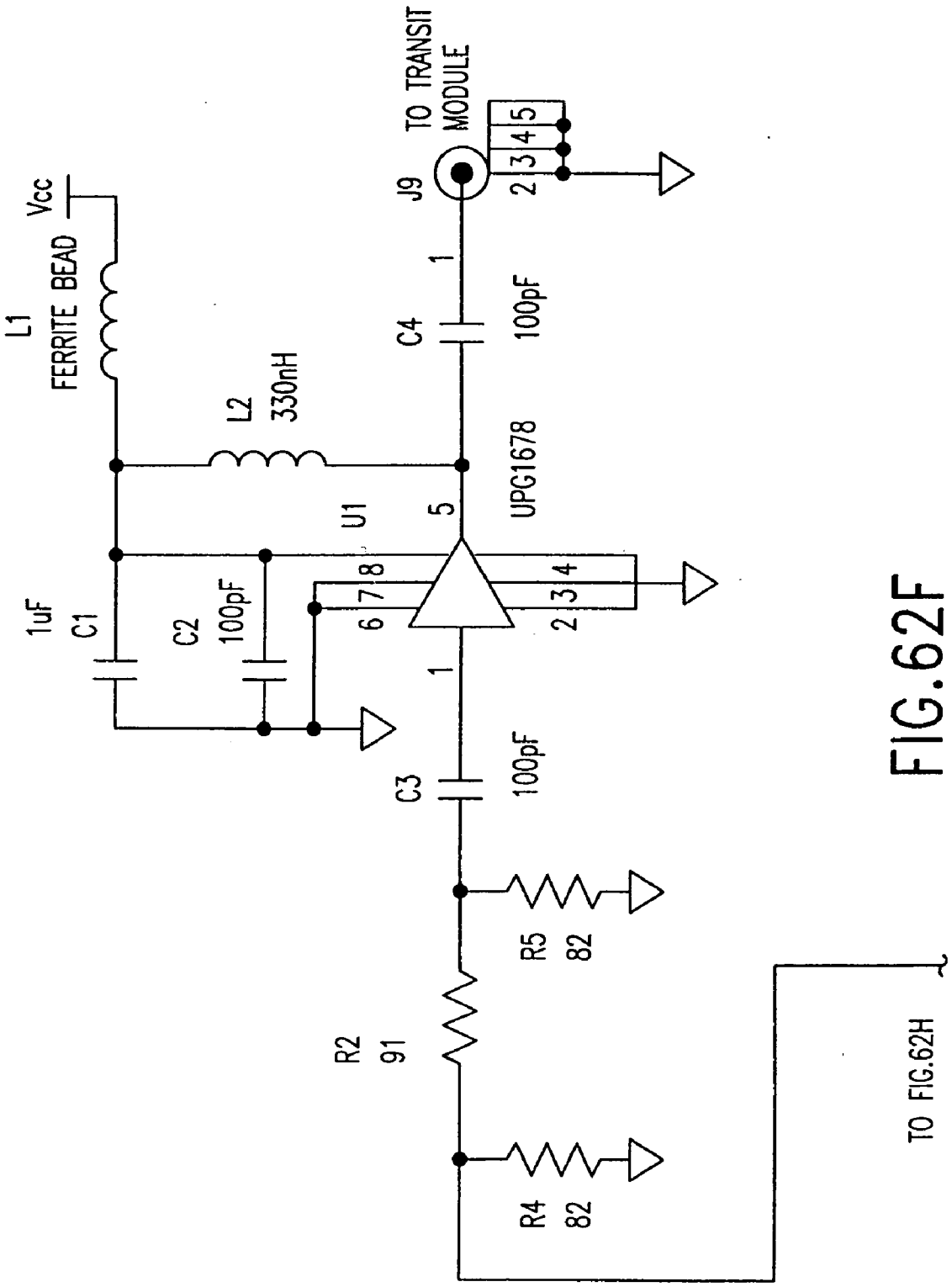
Vcc
L1
FERRITE BEAD
L2
330nH
1uF
C1
C2
100pF
U1
UPG1678
C4
100pF
C3
100pF
J9
TO TRANSIT
MODULE
R5
82
R2
91
R4
82
TO FIG.62H

FIG.62F

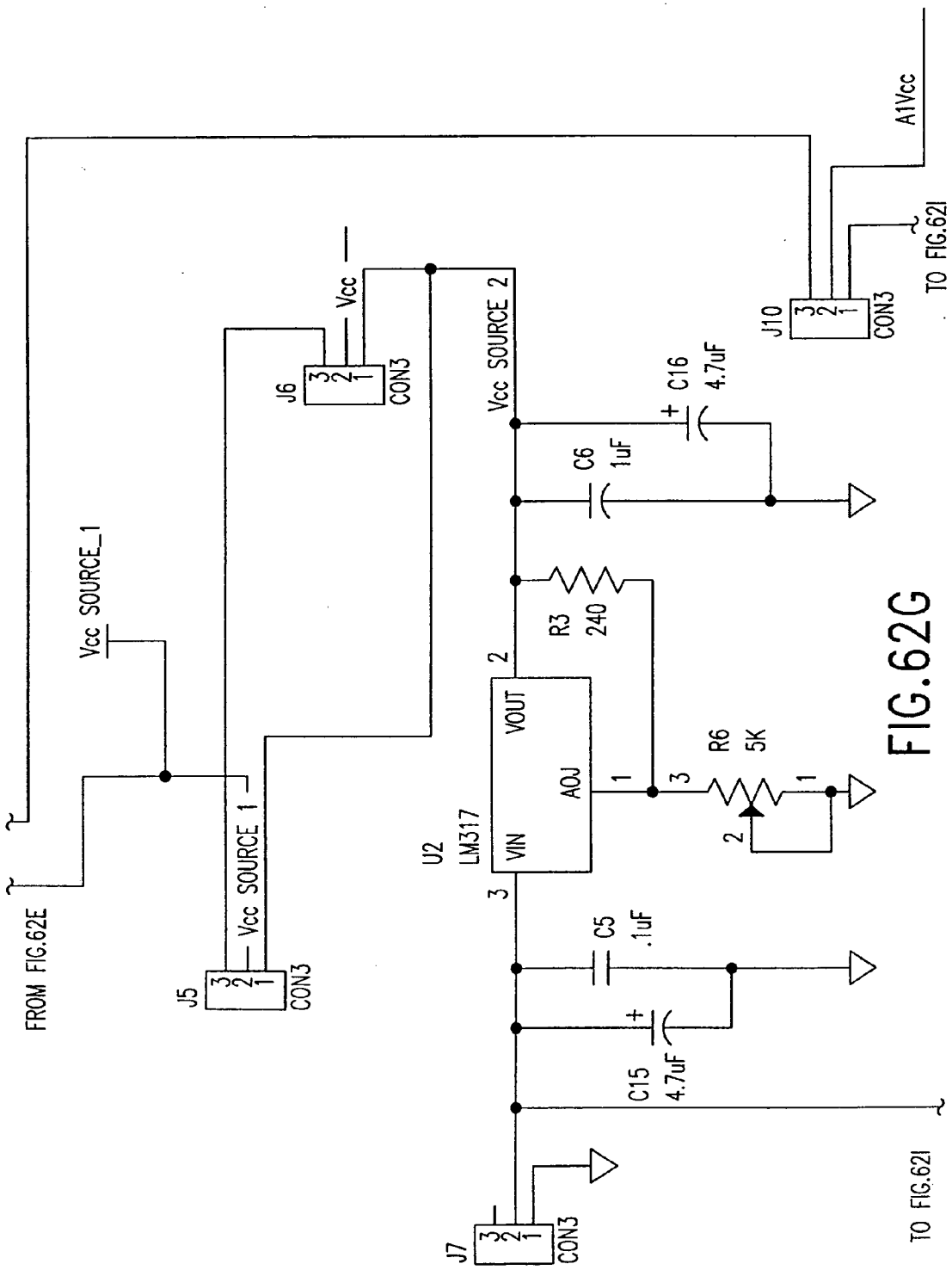
FROM FIG.62E
Vcc SOURCE_1
J5
CON3
Vcc SOURCE 1
J6
CON3
Vcc
Vcc SOURCE 2
U2
LM317
VIN
VOUT
ADJ
R3
240
C6
1uF
C16
4.7uF
R6
5K
C5
.1uF
C15
4.7uF
J7
CON3
J10
CON3
A1Vcc
TO FIG.621
TO FIG.621

FIG.62G

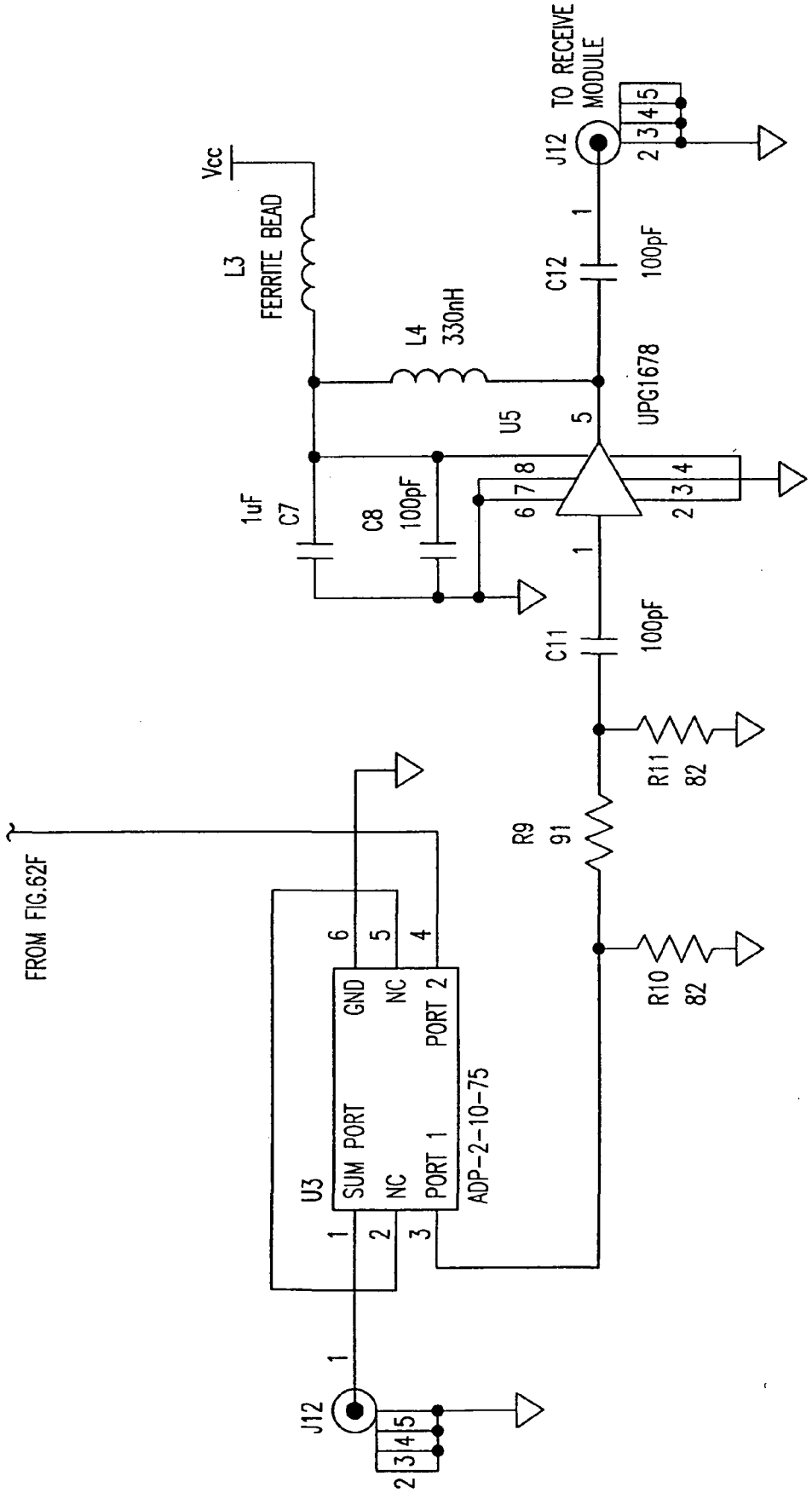
FROM FIG.62F
J12
U3
SUM PORT
NC
PORT 1
GND
NC
PORT 2
ADP-2-10-75
R10
82
R9
91
R11
82
C11
100pF
C7
1uF
C8
100pF
U5
UPG1678
L4
330nH
L3
FERRITE BEAD
Vcc
C12
100pF
J12
TO RECEIVE MODULE

FIG.62H

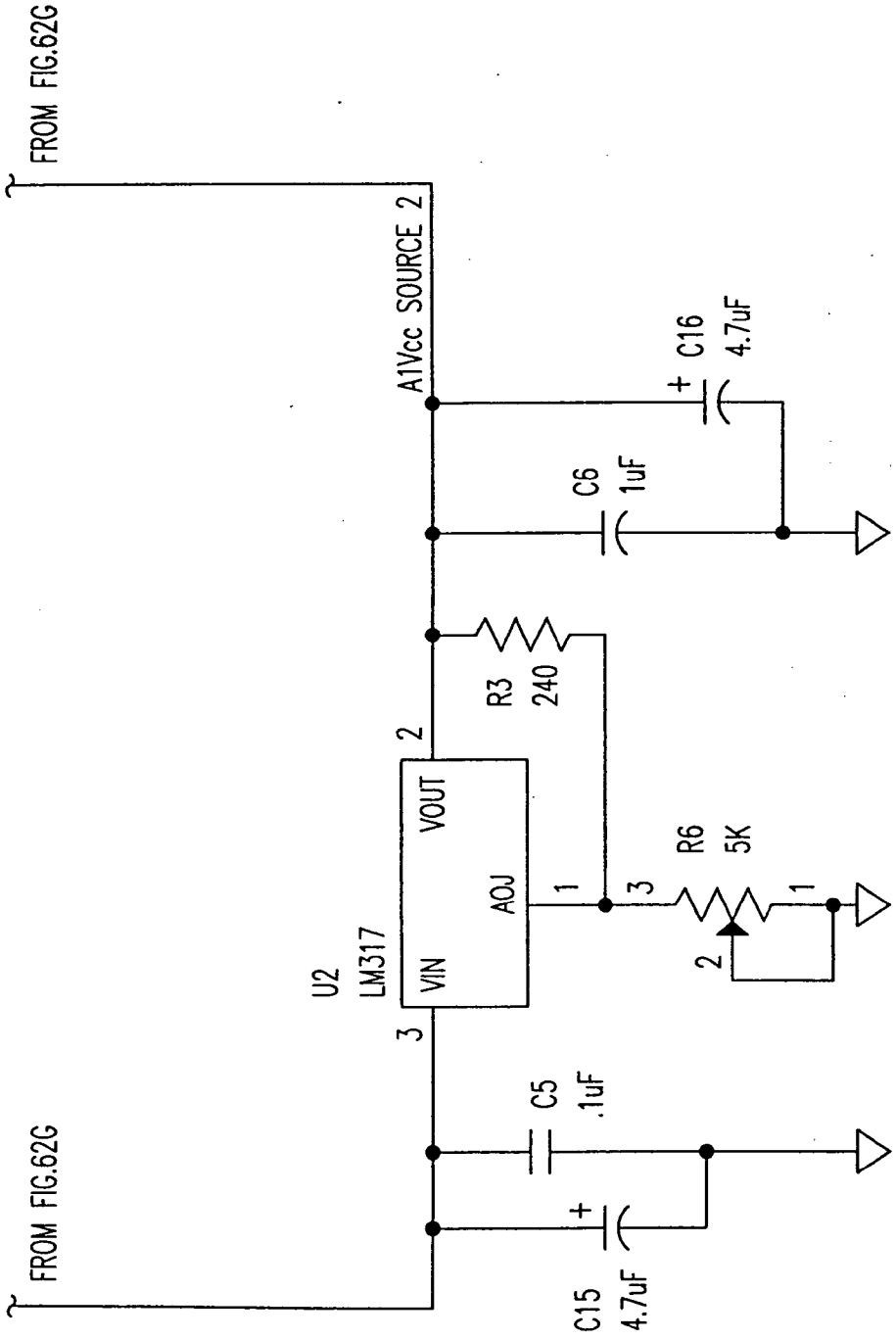
FROM FIG.62G
A1Vcc SOURCE 2
C16
4.7uF
C6
1uF
R3
240
2
VOUT
U2
LM317
VIN
ADJ
1
3
R6
5K
2
1
3
C5
.1uF
FROM FIG.62G
C15
4.7uF

FIG.62I

ITEM	QTY	REFERENCE	PART	DESCRIPTION	PART NUMBER	VENDOR
1	4	C1,C6,C7,C10	1uF	Cap, 1uF, +80-20%,0805	GRM40Y5V105Z016AD	MURATA
2	6	C2,C3,C4,C8,C11,C12	100pF	Cap, 100pF, 5%, COG, 0603	ECU-V1H101JCV	PANASONIC
3	2	C5,C9	.1uF	Cap, .1uF, +80-20%, Y5V, 0603		MURATA
4	3	C13,C14,C19	22uF	Cap, Tant, 22uF, 20%, 20V	T491D226M020AS	KEMET
5	4	C15,C16,C17,C18	4.7uF	Cap, Tant, 4.7uF, 20%, 20V	T491C475M020AS	KEMET
6	2	JP2,JP6	HEADER 7X2	Receptacle, 7x2pin, .050	SFMC-107-L1-S-D	SAMTEK
7	9	JP4, J4, J5, J6, J7, JP9, J9,	CON3	Header, 3pin, .100''	69190-403	BERG
		J10, JP11				
8	1	JP7	HEADER 10X2	Receptacle, 10X2pin, .050	SFMC-110-L1-S-D	SAMTEK
9	1	JP8	HEADER 5X2	Receptacle, 5X2pin, .050	SFMC-105-L1-S-D	SAMTEK
10	1	J2	EHT-1-10-01-S-D	Header, ribbon, 10X2pin, 2mm	EHT-1-10-01-S-D	SAMTEK
11	3	J8,J11,J12	82MMCX-50-0-1	Connector,RF	82MMCX-50-0-1	SUHNER
12	2	L3,L1	Ferrite Bead	Ferrite Bead, 0805	BLM21A121S	MURATA
13	2	L4,L2	330nH	Ind, 330nH, 10%, 0805	LL2012-FR33K	TOKO
14	1	R1	DNP	Res, 0603		PANASONIC
15	2	R9,R2	91	Res, 91 Ohn, 5%, 0603	ERJ-3GSYJ910	PANASONIC
16	2	R7,R3	240	Res, 240 Ohm, 5%, 0603	ERJ-3GSYJ241	PANASONIC
17	4	R4,R5,R10,R11	82	Res, 82 Ohm, 5%, 0603	ERJ-3GSYJ820	PANASONIC
18	2	R8,R6	5K	Var Res, 5K, 10%	3296W001502	BOUMS
19	10	R12, R13, R14, R15, R16,	180	Res, 180 Ohm, 5%, 0603	ERJ-3GSYJ181	PANASONIC
		R17, R18, R19, R20, R21				
20	10	R22, R23, R24, R25, R26,	390	Res, 390 Ohm, 5%, 0603	ERJ-3GSYJ391	PANASONIC
		R27, R28, R29, R30, R31				
21	2	U5,U1	UPG1678	IC, RF Buffer	UPG1678GV	NEC
22	2	U4,U2	LM317	IC, Voltage Regulator	LM317T	NATIONAL
23	1	U3	ADP-2-10-75	RF Splitter	ADP-2-10-75	MINICIRCUITS
24	1	U6	DS3862	IC, Buffer	DS3862WM	NATIONAL
25	1			BOARD	ST8500.641.023V0L01	

FIG.63

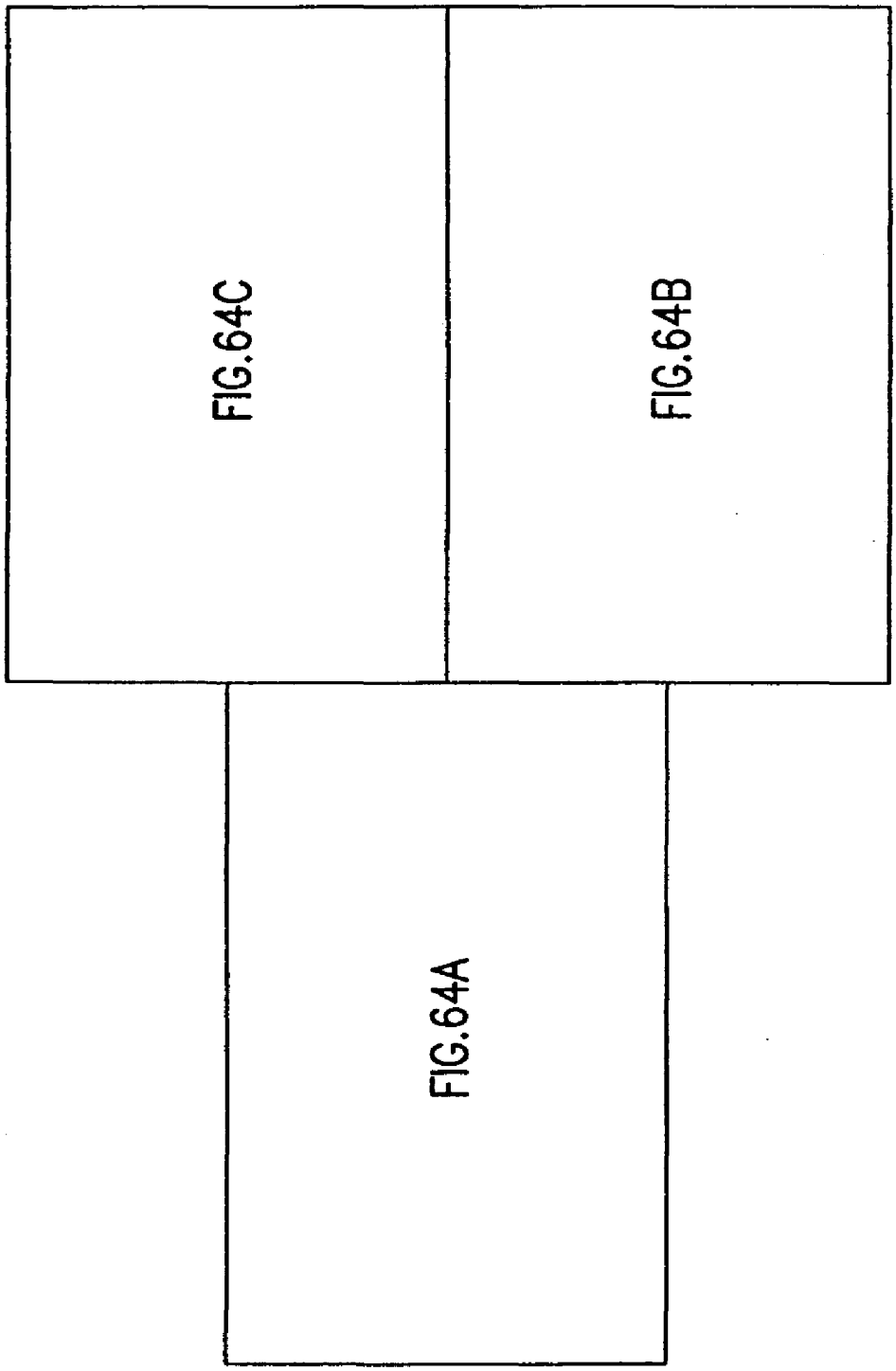

FIG.64

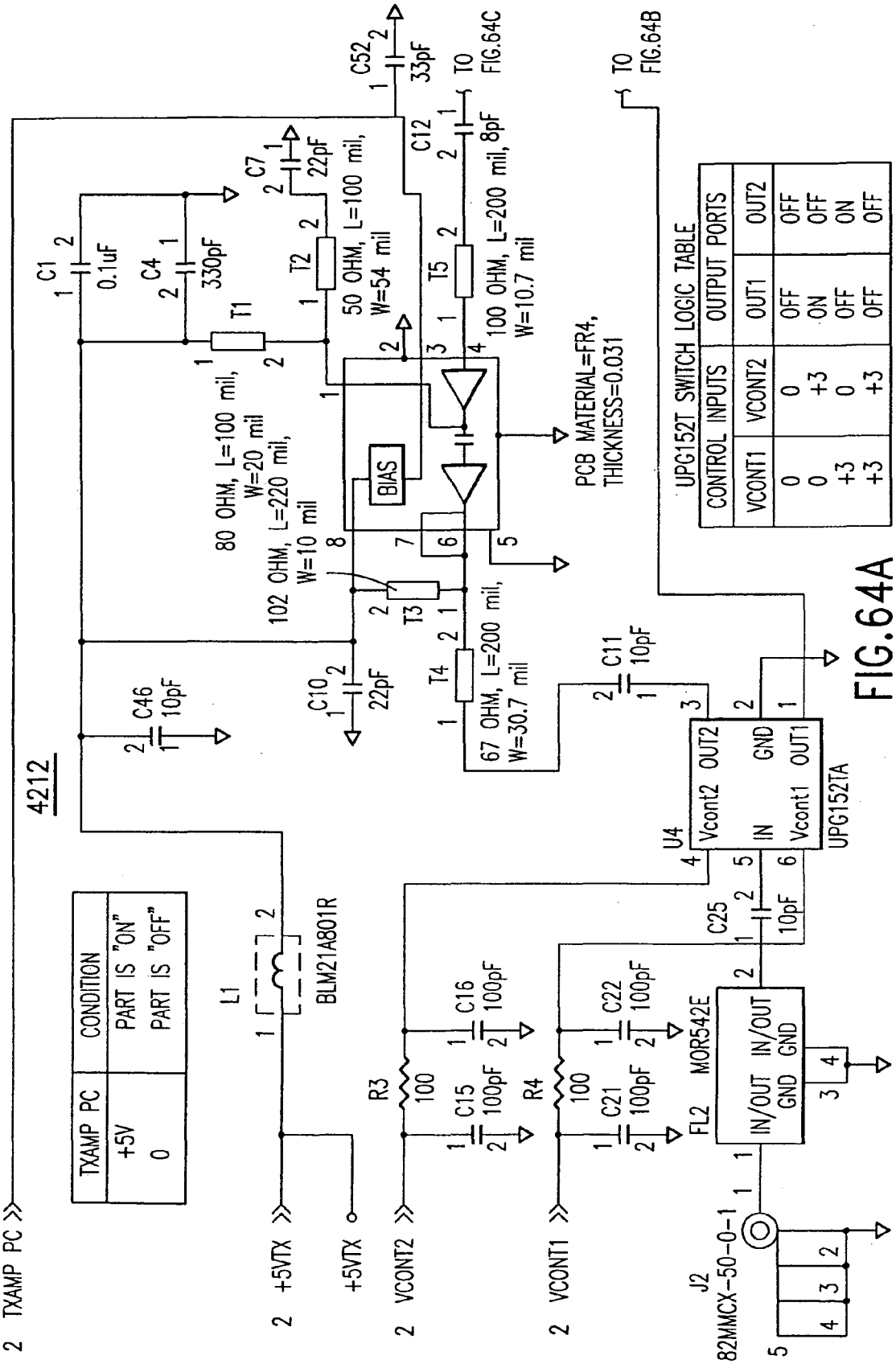

UPG152T SWITCH LOGIC TABLE

CONTROL INPUTS		OUTPUT PORTS	
VCONT1	VCONT2	OUT1	OUT2
0	0	OFF	OFF
0	+3	ON	OFF
+3	0	OFF	ON
+3	+3	OFF	OFF

FIG.64A

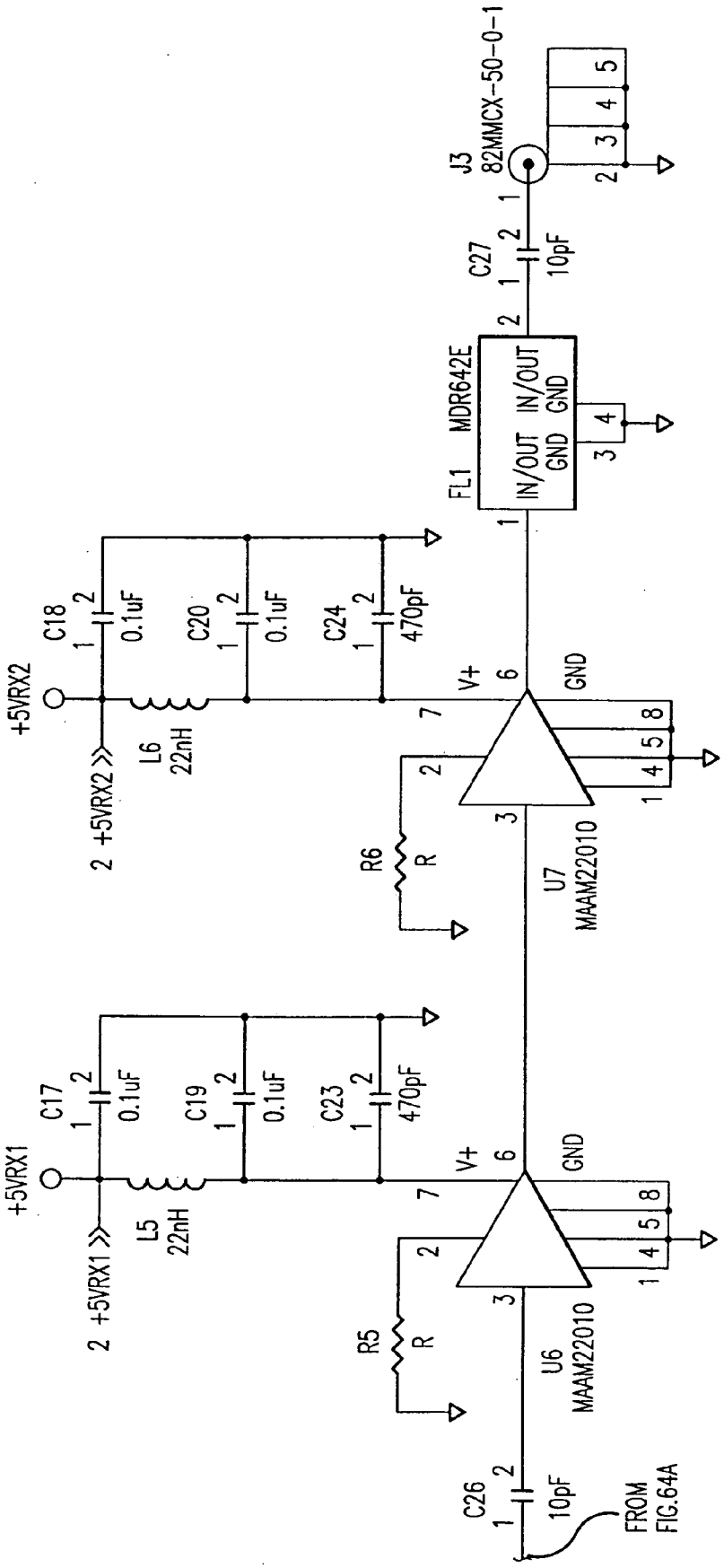
+5VRX2
2 +5VRX2 >>
C18
0.1uF
L6
22nH
C20
0.1uF
C24
470pF
R6
R
V+
GND
U7
MAAM22010
+5VRX1
2 +5VRX1 >>
C17
0.1uF
L5
22nH
C19
0.1uF
C23
470pF
R5
R
U6
MAAM22010
C26
10pF
FROM
FIG.64A
FL1
MDR642E
IN/OUT
GND
IN/OUT
GND
C27
10pF
J3
82MMCX-50-0-1

FIG.64B

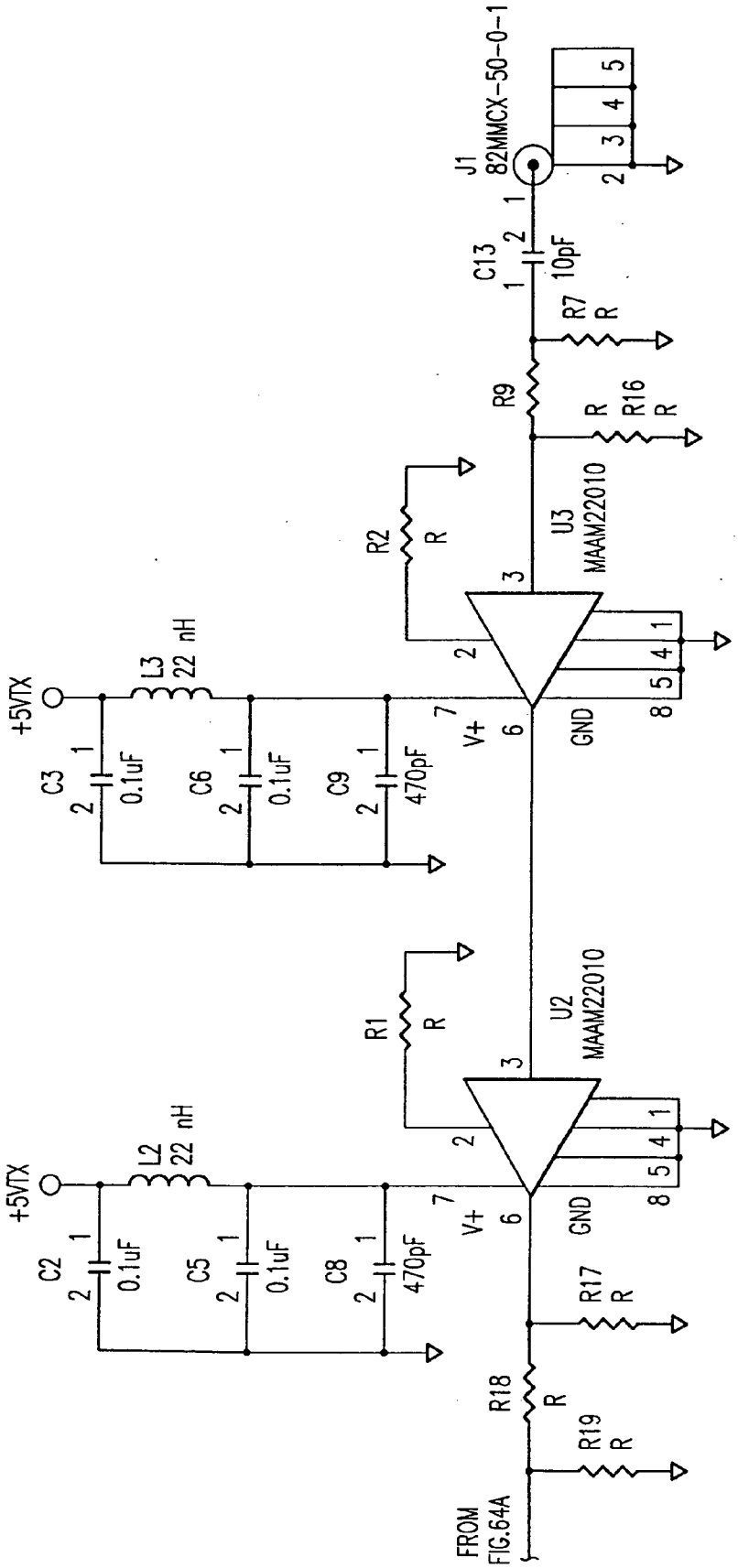
J1
82MMCX-50-0-1
C13
10pF
R7
R
R9
R
R16
R
U3
MAAM22010
R2
R
L3
22 nH
+5VTX
C3
0.1uF
C6
0.1uF
C9
470pF
V+
GND
U2
MAAM22010
R1
R
L2
22 nH
+5VTX
C2
0.1uF
C5
0.1uF
C8
470pF
V+
GND
R17
R
R18
R
R19
R
FROM
FIG.64A

FIG.64C

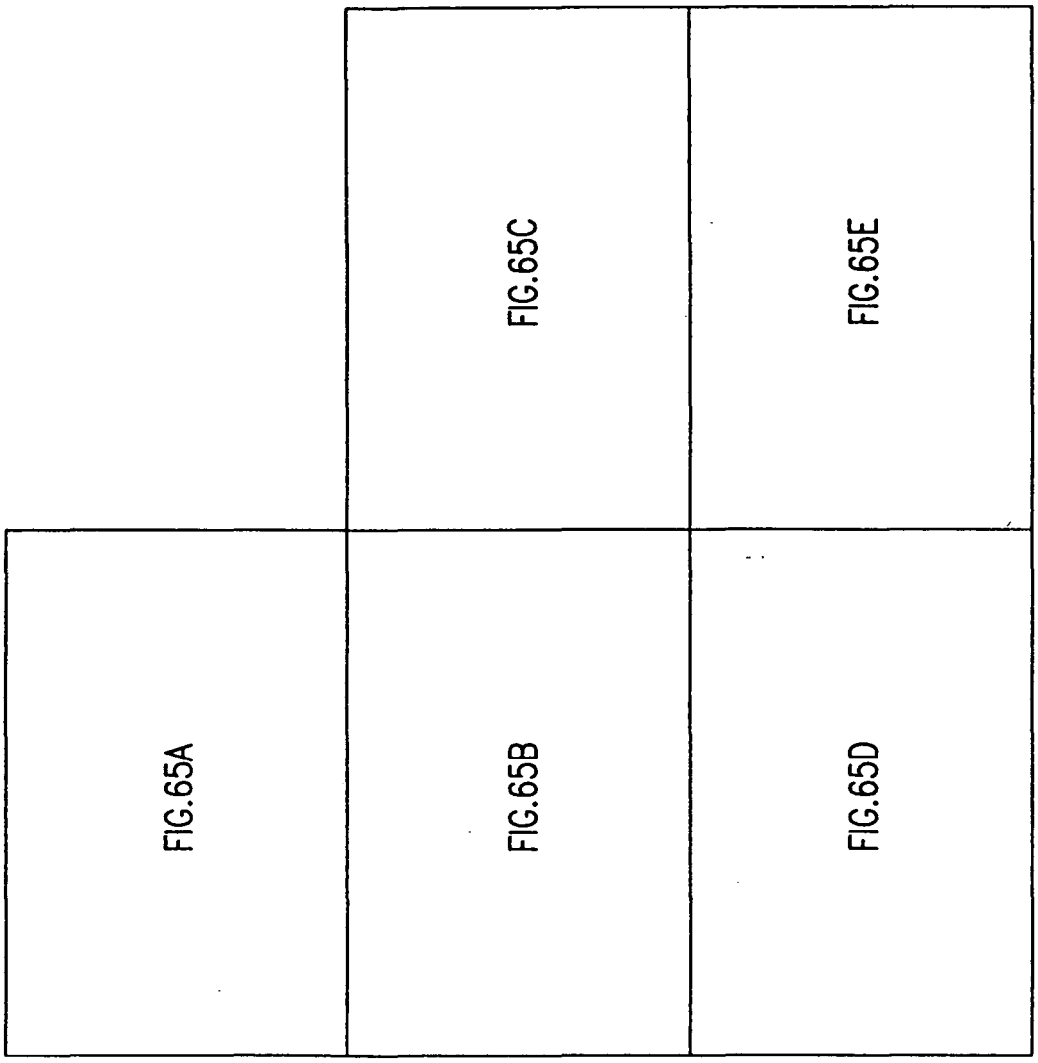

FIG.65

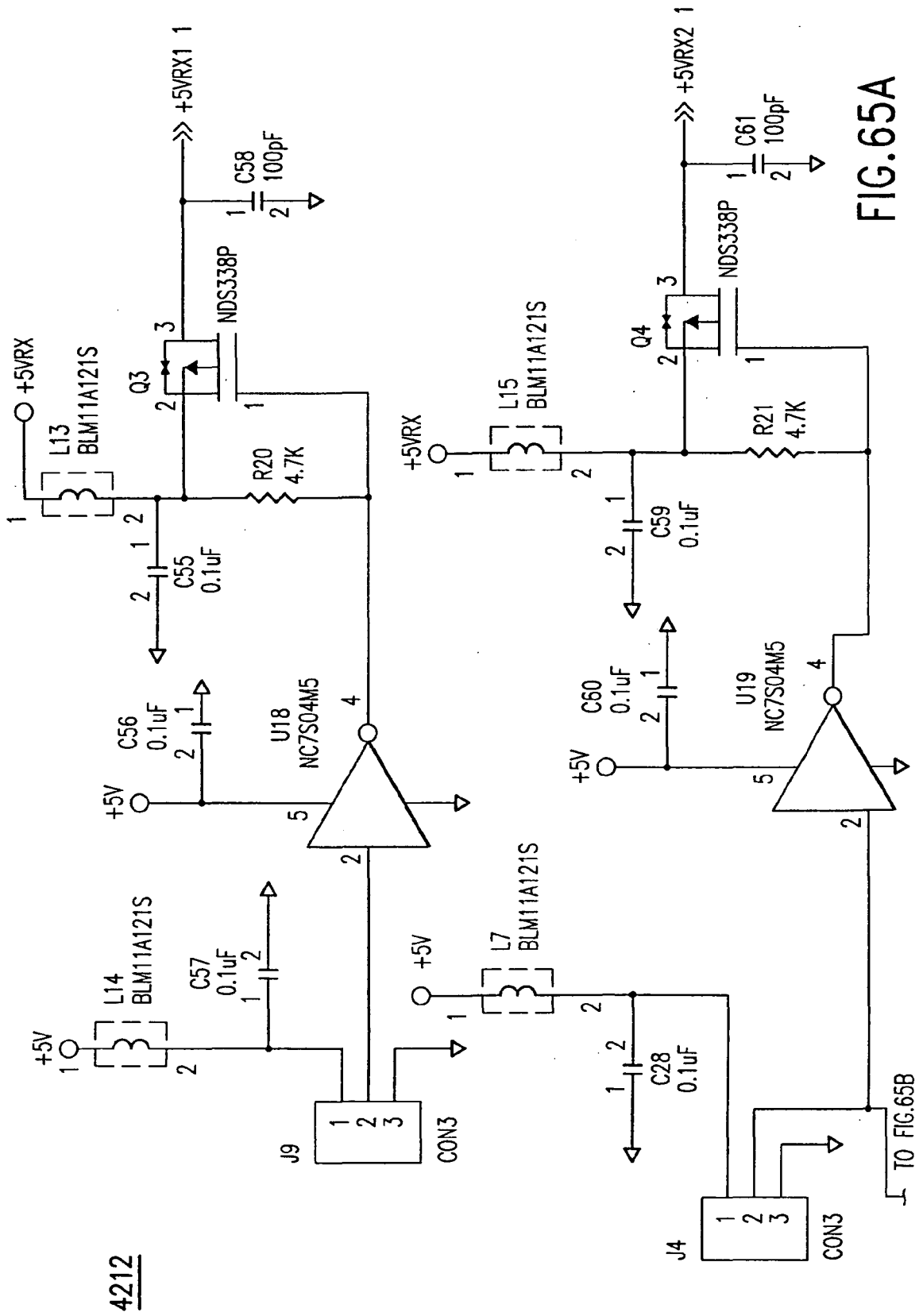
+5VRX1
C58
100pF
NDS338P
Q3
+5VRX
L13
BLM11A121S
R20
4.7K
C55
0.1uF
C56
0.1uF
U18
NC7S04M5
+5V
L14
BLM11A121S
C57
0.1uF
J9
CON3
+5VRX2
C61
100pF
NDS338P
Q4
L15
BLM11A121S
R21
4.7K
C59
0.1uF
C60
0.1uF
U19
NC7S04M5
L7
BLM11A121S
C28
0.1uF
J4
CON3
TO FIG.65B
4212

FIG.65A

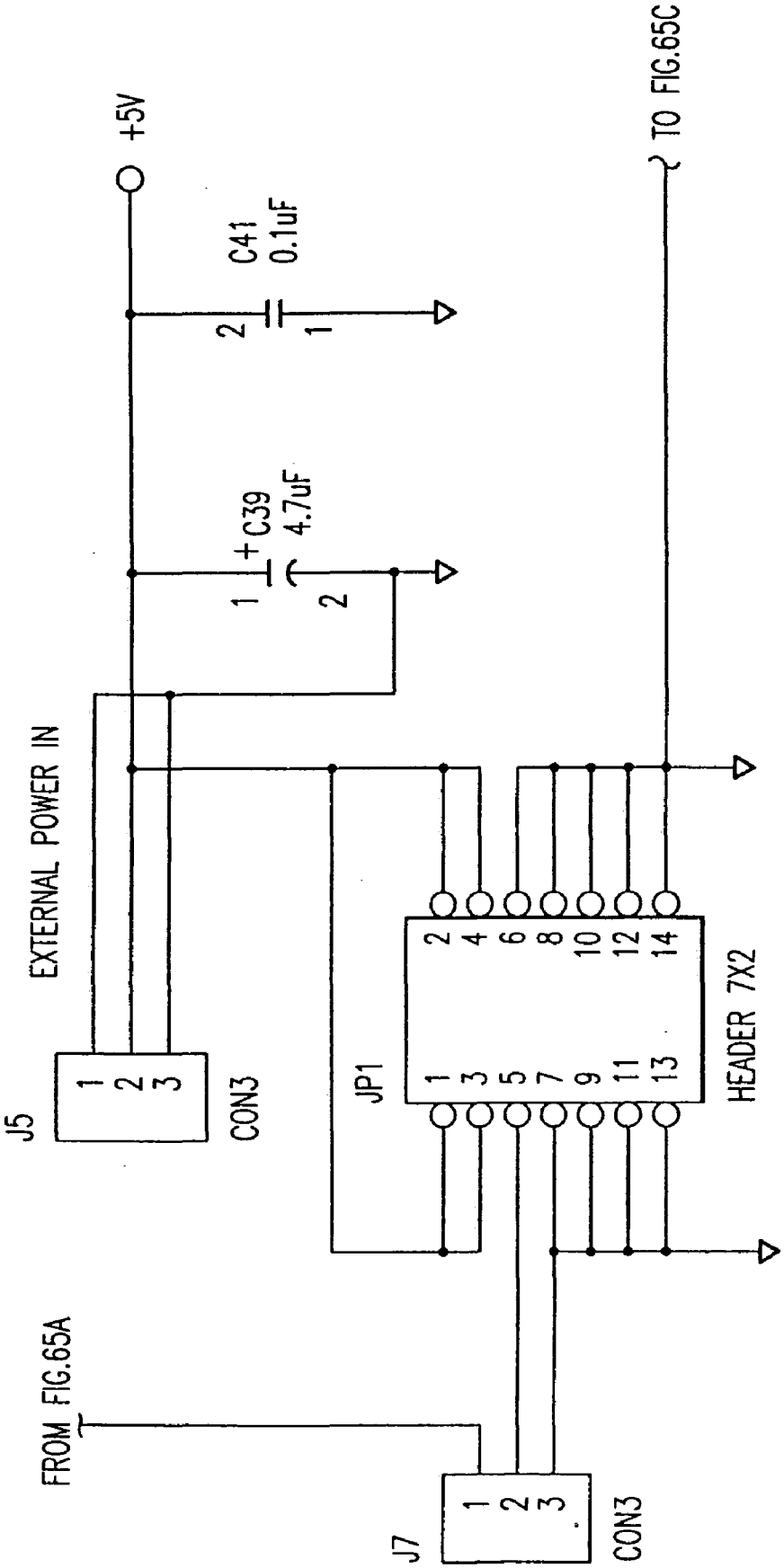
+5V
C41
0.1uF
C39
4.7uF
EXTERNAL POWER IN
J5
CON3
JP1
HEADER 7X2
TO FIG.65C
FROM FIG.65A
J7
CON3

FIG.65B

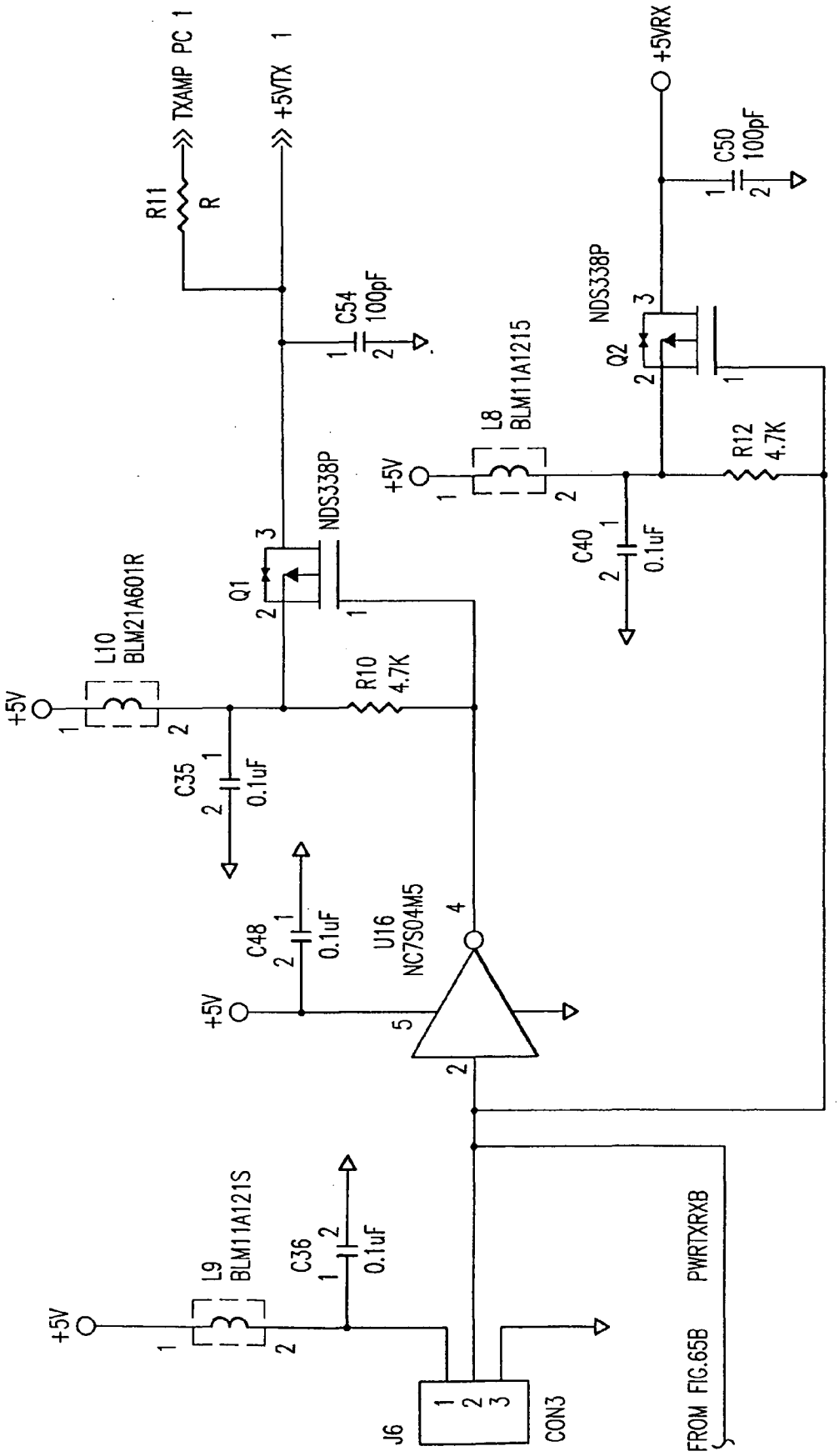
TXAMP PC 1
+5VTX 1
R11
R
C54
100pF
+5VRX
C50
100pF
NDS338P
Q2
L8
BLM11A1215
+5V
R12
4.7K
C40
0.1uF
NDS338P
Q1
L10
BLM21A601R
+5V
R10
4.7K
C35
0.1uF
C48
0.1uF
U16
NC7S04M5
+5V
L9
BLM11A121S
+5V
C36
0.1uF
J6
CON3
FROM FIG.65B
PWRTXRXB

FIG.65C

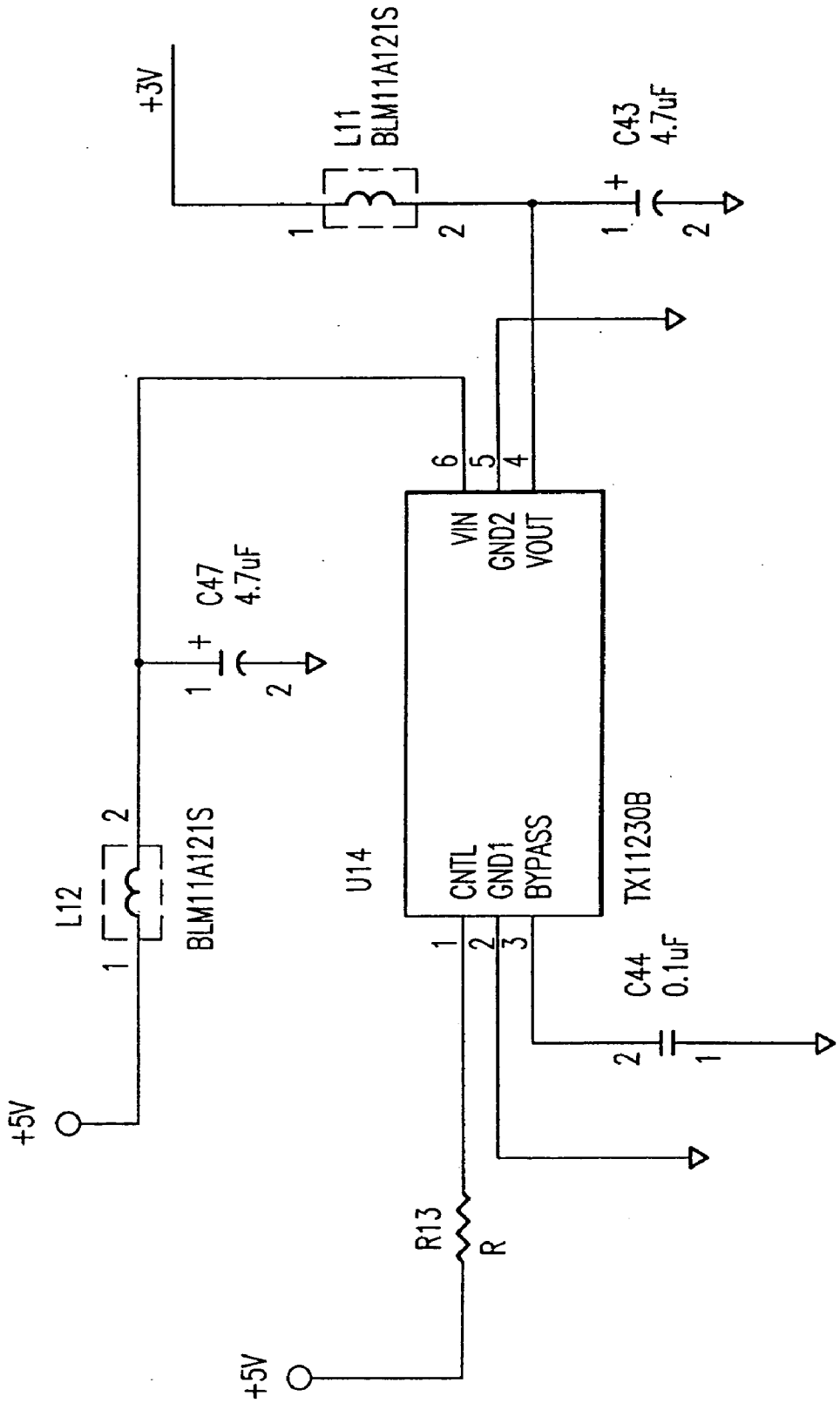
+3V
L11
BLM11A121S
C43
4.7uF
C47
4.7uF
L12
BLM11A121S
U14
VIN
GND2
VOUT
CNTL
GND1
BYPASS
TX11230B
C44
0.1uF
R13
R
+5V
+5V

FIG.65D

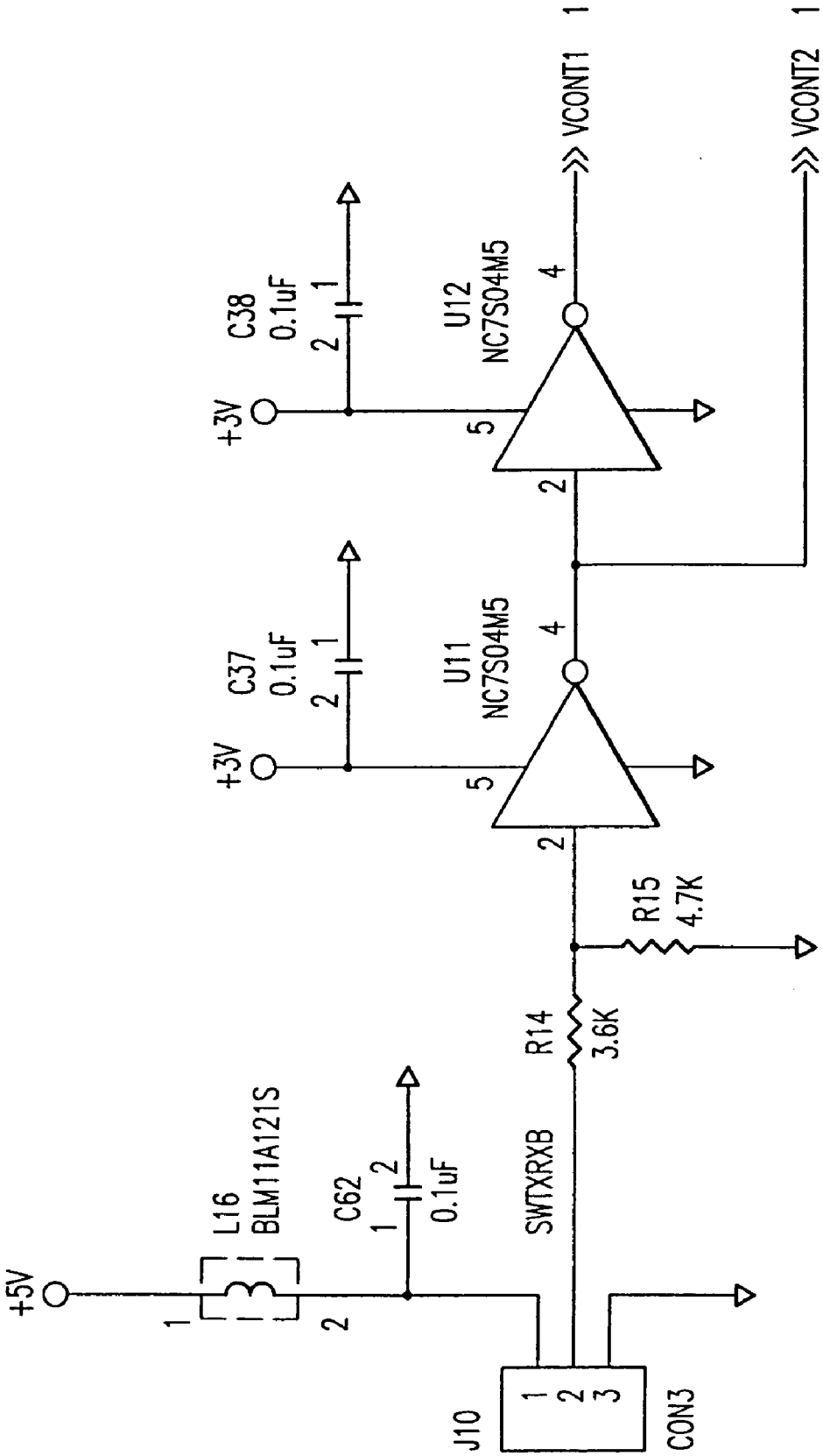
+5V
L16
BLM11A121S
C62
0.1uF
SWTXRXB
R14
3.6K
R15
4.7K
J10
CON3
+3V
C37
0.1uF
U11
NC7S04M5
+3V
C38
0.1uF
U12
NC7S04M5
VCONT1
VCONT2

FIG.65E

ITEM	QTY	REFERENCE	PART	MANUFACT.	PART DESCRIPTION	PART NUMBER
1	24	C1,C2,C3,C5,C6,C17,C18,	0.1uF	MURATA	.1uF,0603,X7R,20%,16V	GRM39X7R104M016
		C19,C20,C28,C35,C36,C37,				
		C38,C40,C41,C44,C48,C55,				
		C56,C57,C59,C60,C62				
2	1	C4	330pF	MURATA	330pF,0603,C0G,10%,50	GRM39C0G331K050
3	2	C10,C7	22pF	MURATA	22pF,0603,C0G,10%,50	GRM30C0G220K050
4	4	C8,C9,C23,C24	470pF	MURATA	470pF,0603,C0G,10%,50	GRM39C0G471K050
5	6	C11,C13,C25,C26,C27,C46	10pF	MURATA	10pF,0603,C0G,10%,50	GRM39C0G100K050
6	1	C12	8pF	MURATA	8pF,0603,C0G,10%,50	GRM39C0G080K050
7	8	C15,C16,C21,C22,C50,C54	100pF	MURATA	100pF,0603,C0G,10%,50	GRM39C0G101K050
		C58,C61				
8	3	C39,C43,C47	4.7uF	PANASONIC	4.7uF TANTALUM,16V	ECS-T1CY475R
9	1	C52	33pF	MURATA	330pF,0603,C0G,10%,50	GRM3C0G330K050
10	2	FL1,FL2	MDR642E	SOSHIN	2.4-2.5GHz BPF	MDR642E
11	1	JP1	HEADER 7X2	SAMTEC	DUAL ROW, 7 PINS PER ROW	FTSH-107-01-F-D
12	3	J1,J2,J3	82MMCX-50-0-1	SUHNER	RF CONNECTOR	82MMCX-50-0-1
13	6	J4,J5,J6,J7,J9,J10	CON3	BERG	3 PIN HEADER W RETENTIVE LEG	69190-403H
14	2	L10,L1	BLM21A601R	MURATA	600 OHMS@100MHz,500mA FERRITE BEAD	BLM21A601R
15	4	L2,L3,L5,L6	22nH	COILCRAFT	22nH,0805CS (2012),5%	0805CS-220X-BC
16	9	L7,L8,L9,L11,L12,L13,L14,	BLM11A121S	MURATA	RF BEAD	BLM11A121S
		L15,L16				
17	4	Q1,Q2,Q3,Q4	NDS336P	NATIONAL	P-CHANNEL FET	NDS336P
18	12	R1,R2,R5,R6,R7,R9,R11,	R	PANASONIC		
		R13,R16,R17,R18,R19				
19	2	R3,R4	100	PANASONIC	0603,100,5%,1/16W	ERJ-3GSY-J-101
20	5	R10,R12,R15,R20,R21	4.7K	PANASONIC	0603,4.7K,5%,1/16W	ERJ-3GSY-J-472

FIG.66A

21	1	R14	3.6K	PANASONIC	0603,3.6K,5%,1/16W	ERJ-3GSY-J-362
22	1	T1	80 OHM,L=100 MIL,W=20 MIL		80 OHM,L=100 MIL,W=20 MIL	
23	1	T2	50 OHM,L=100 MIL,W=54 MIL		50 OHM,L=100 MIL,W=54 MIL	
24	1	T3	102 OHM,L=220 MIL,W=10 MIL		102 OHM,L=220 MIL,W=10 MIL	
25	1	T4	67 OHM,L=200 MIL,W=30.7 MIL		67 OHM,L=200 MIL,W=30.7 MIL	
26	1	T5	100 OHM,L=200 MIL,W=10.7MIL		100 OHM,L=200 MIL,W=10.7 MIL	
27	4	U2,U3,U6,U7	MAAM22010	MACOM	2.4-2.5 GHz LNA	MAAM22010
28	1	U4	UPG152TA	NEC	RF SWITCH	UPG152TA
29	5	U11,U12,U16,U18,U19	NC7S04M5	NATIONAL	INVERTER	NC7S04M5
30	1	U14	TKN11230B	TOKO	VOLTAGE REGULATOR	TK11230B
31	1	U17	RF2128P	RFMD	MEDIUM POWER LINEAR AMPLIFIER	RF2128P
32	1				BOARD	B500.641.024 VOL.

FIG.66B

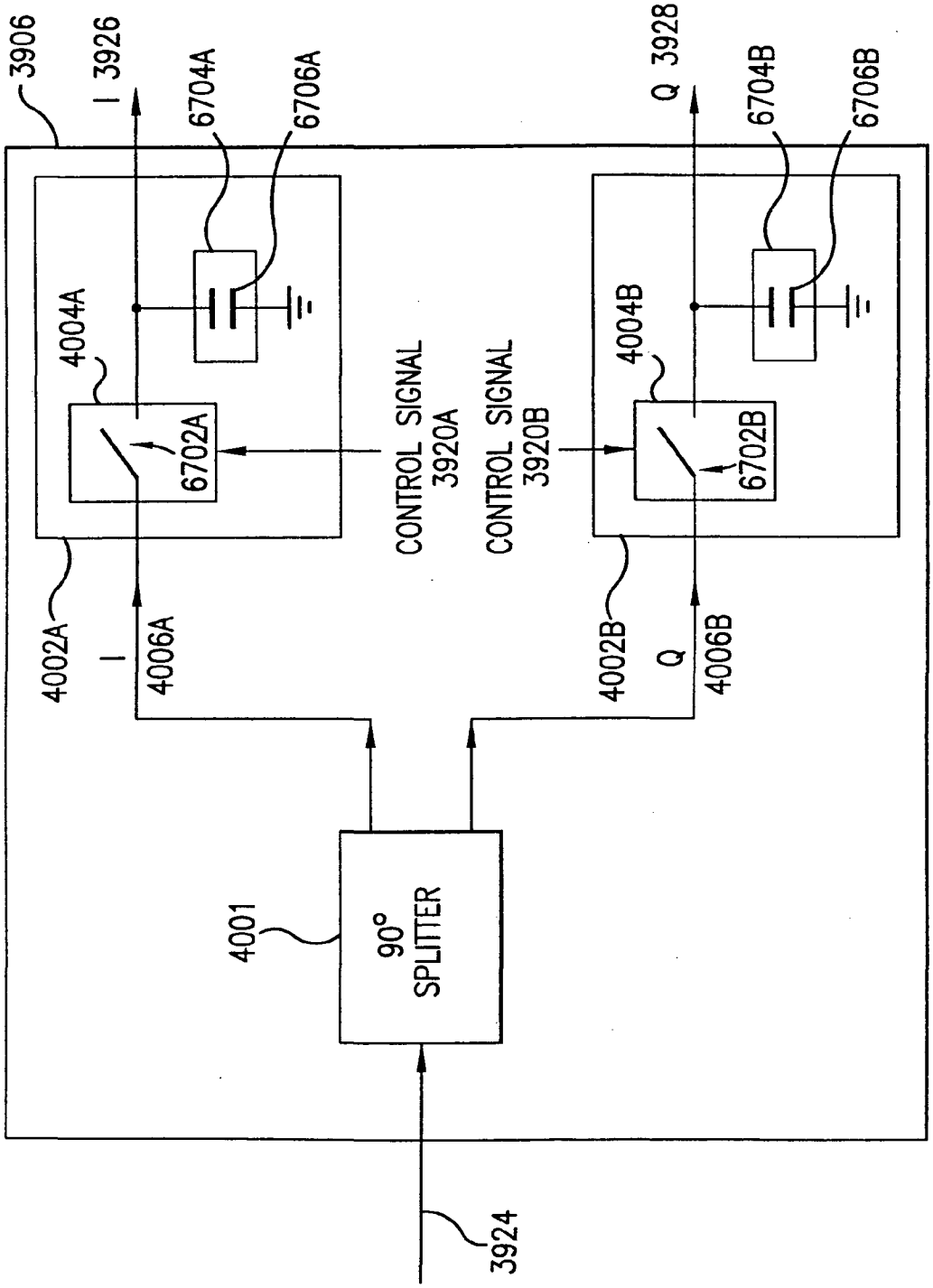
3906
I 3926
6704A
6706A
Q 3928
6704B
6706B
4004A
4004B
6702A
6702B
CONTROL SIGNAL
3920A
CONTROL SIGNAL
3920B
4002A
4002B
I
Q
4006A
4006B
4001
90°
SPLITTER
3924

FIG.67A

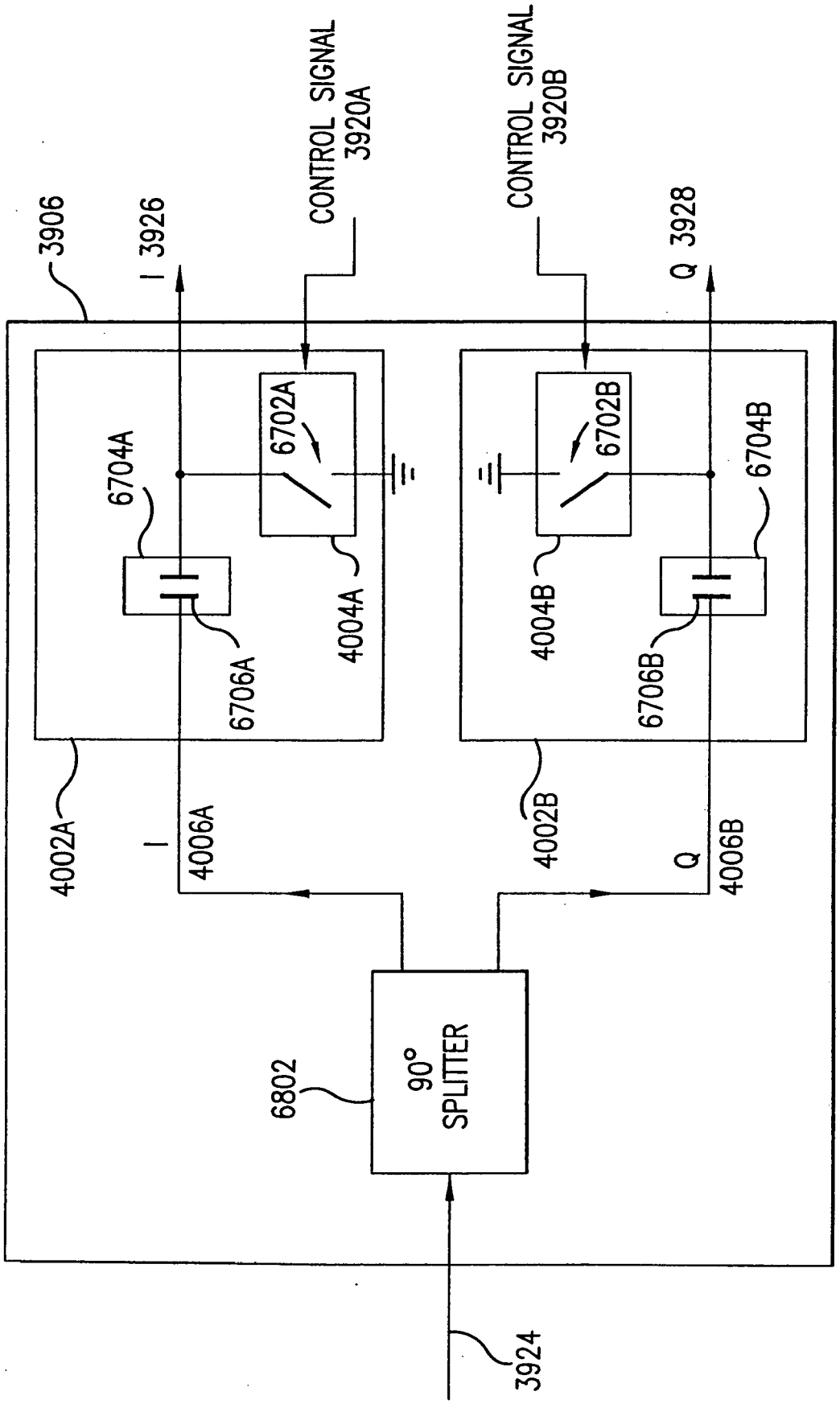
3906
I 3926
CONTROL SIGNAL 3920A
CONTROL SIGNAL 3920B
Q 3928
6704A
6702A
6702B
6704B
6706A
4004A
4004B
6706B
4002A
I
4006A
4002B
Q
4006B
6802
90° SPLITTER
3924

FIG.67B

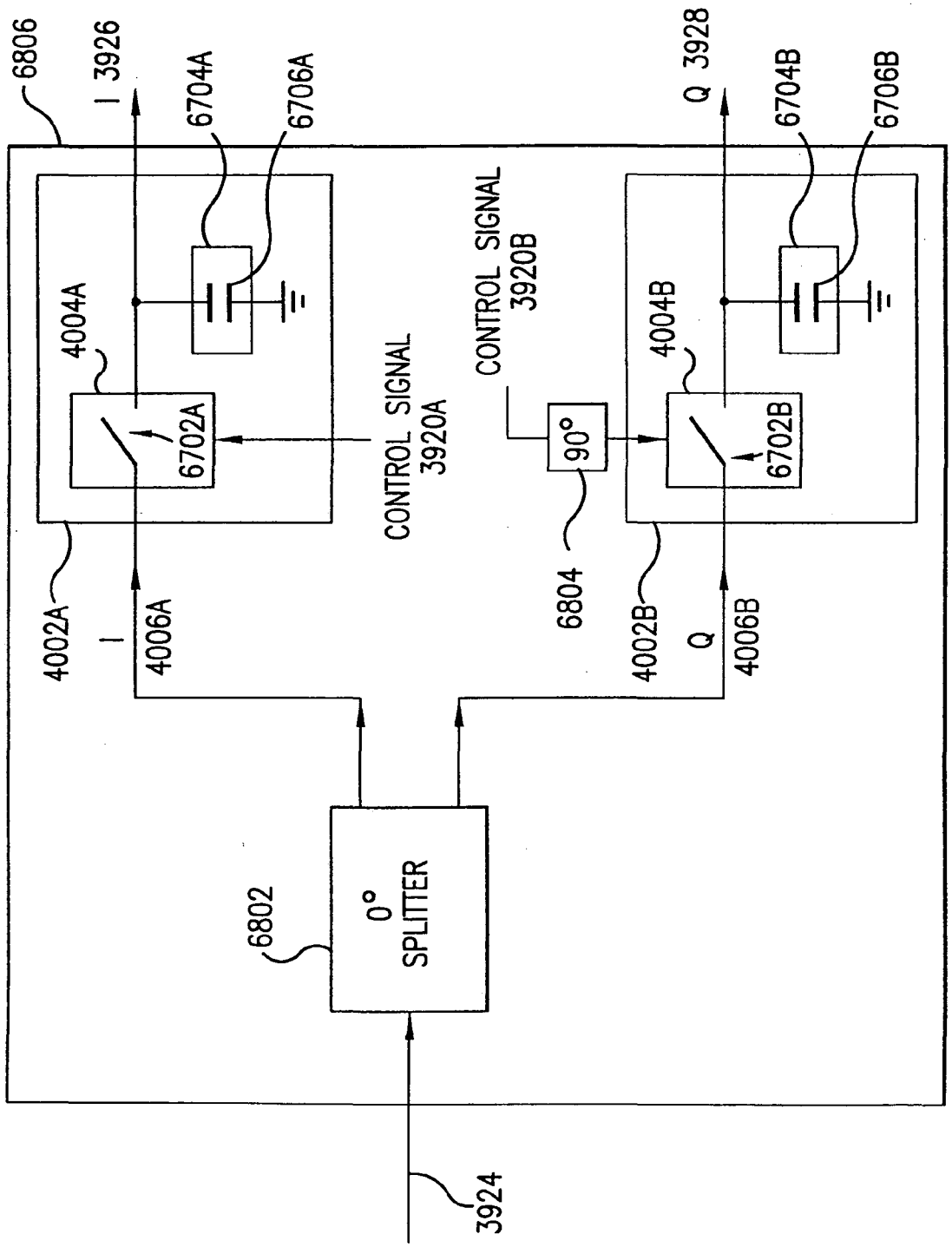
6806
I 3926
6704A
6706A
4004A
6702A
CONTROL SIGNAL
3920A
4002A
I
4006A
CONTROL SIGNAL
3920B
90°
6804
Q 3928
6704B
6706B
4004B
6702B
4002B
Q
4006B
6802
0°
SPLITTER
3924

FIG.68A

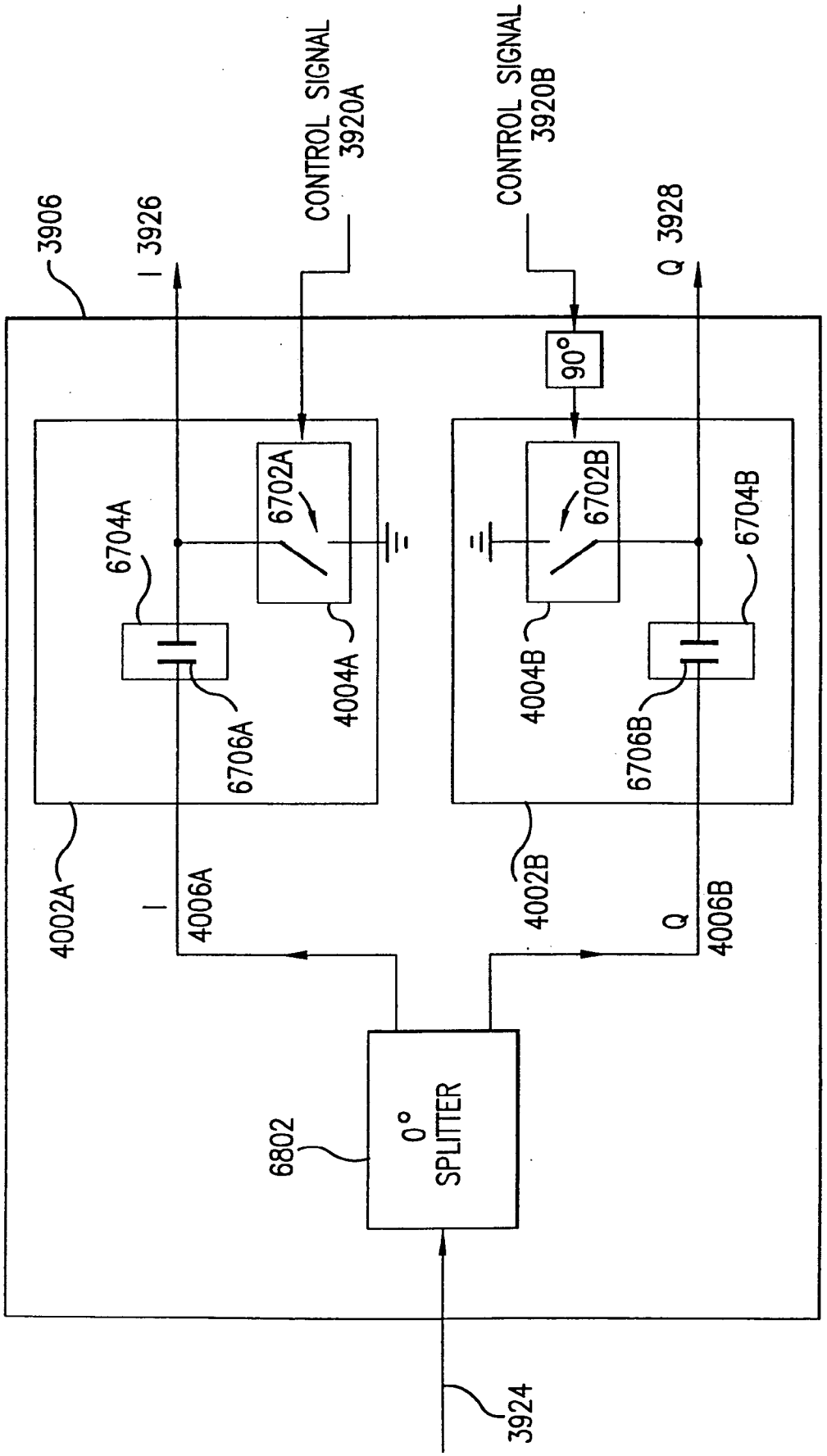
3906
I 3926
CONTROL SIGNAL 3920A
CONTROL SIGNAL 3920B
Q 3928
90°
6702A
6704A
6706A
4004A
4002A
I
4006A
6702B
6704B
4004B
6706B
4002B
Q
4006B
6802
0° SPLITTER
3924

FIG.68B

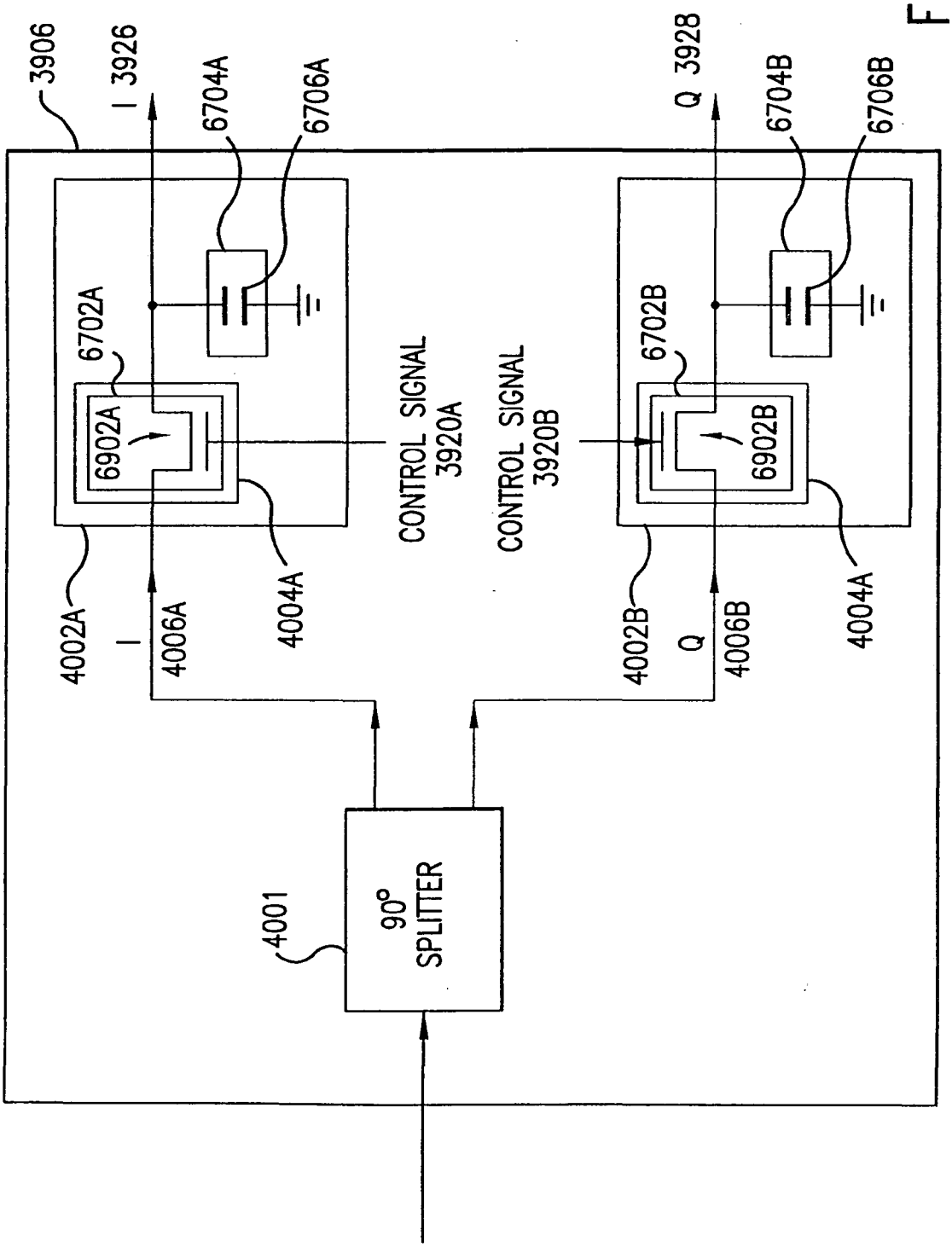
3906
I 3926
6704A
6706A
6702A
6902A
4002A
I
4006A
4004A
CONTROL SIGNAL
3920A
CONTROL SIGNAL
3920B
Q 3928
6704B
6706B
6702B
6902B
4002B
Q
4006B
4004A
4001
90°
SPLITTER

FIG.69A

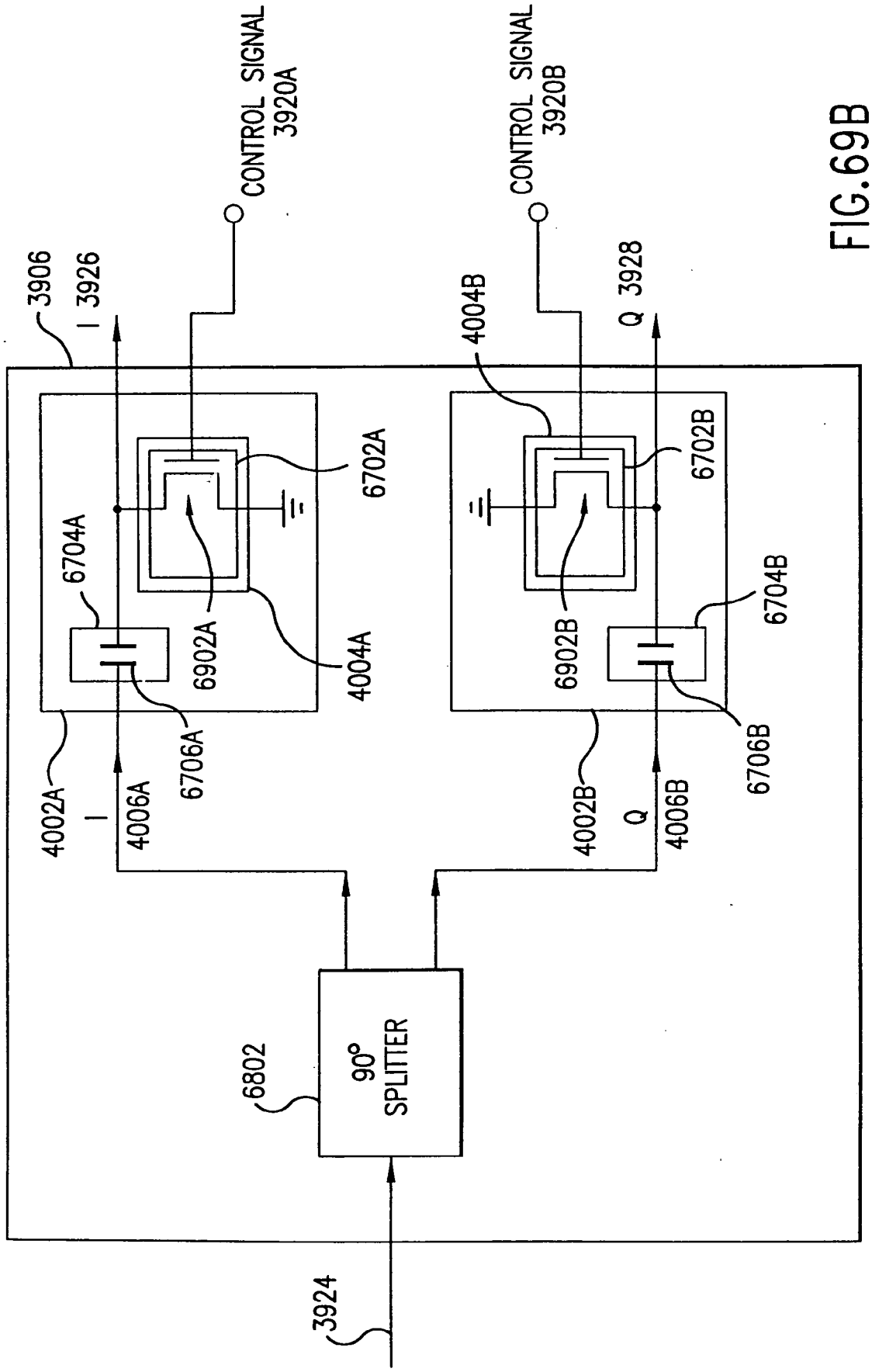
CONTROL SIGNAL 3920A
CONTROL SIGNAL 3920B
3906
I 3926
Q 3928
4004B
6702A
6702B
6704A
6704B
6902A
6902B
4004A
6706A
6706B
4002A
4002B
I
Q
4006A
4006B
6802
90° SPLITTER
3924

FIG. 69B

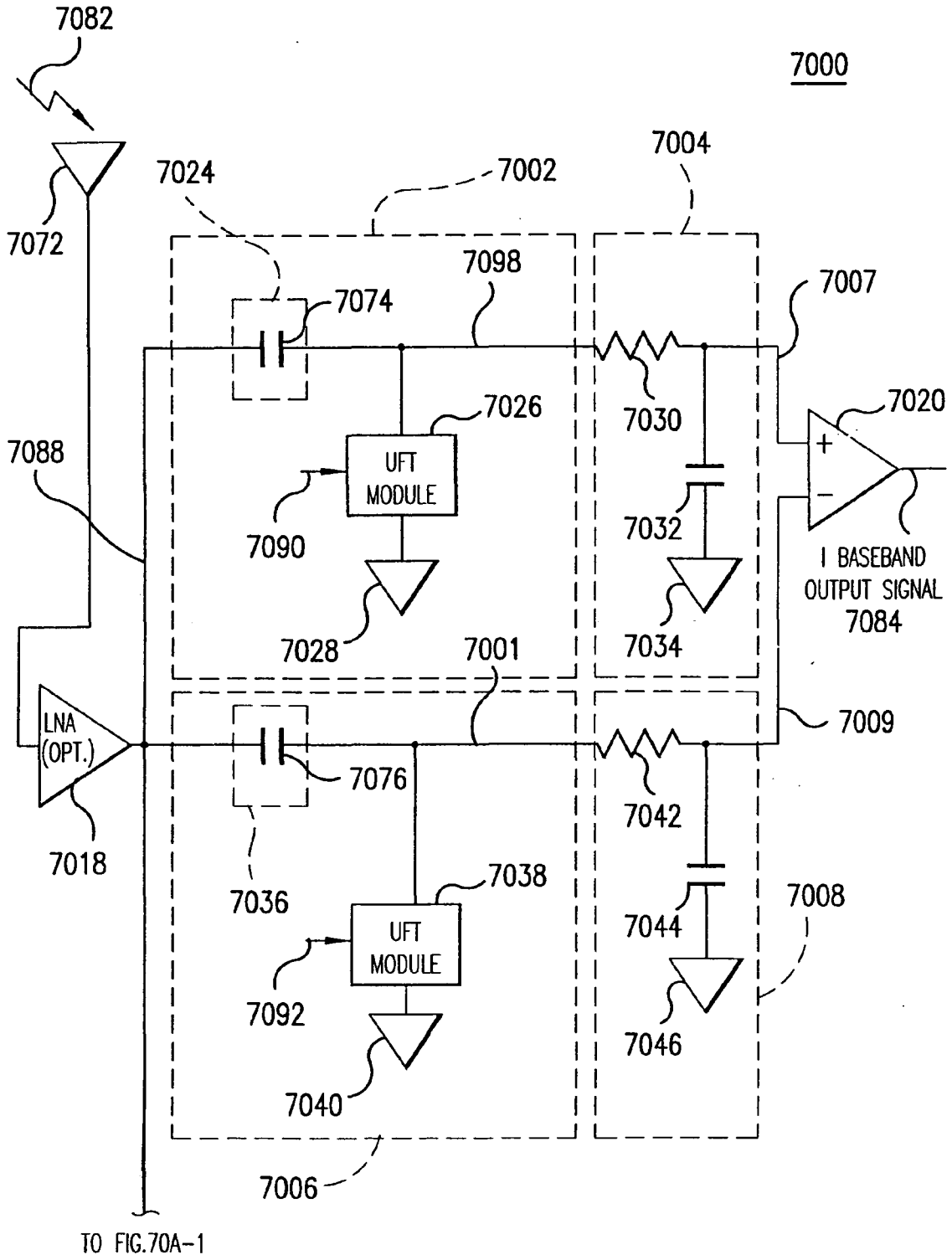
7082
7000
7004
7024
7002
7072
7098
7007
7074
7026
7020
7030
7088
UFT MODULE
7032
7090
I BASEBAND OUTPUT SIGNAL
7084
7028
7001
7034
LNA (OPT.)
7009
7076
7042
7018
7036
7038
7008
7044
UFT MODULE
7092
7046
7040
7006
TO FIG.70A-1

FIG.70A

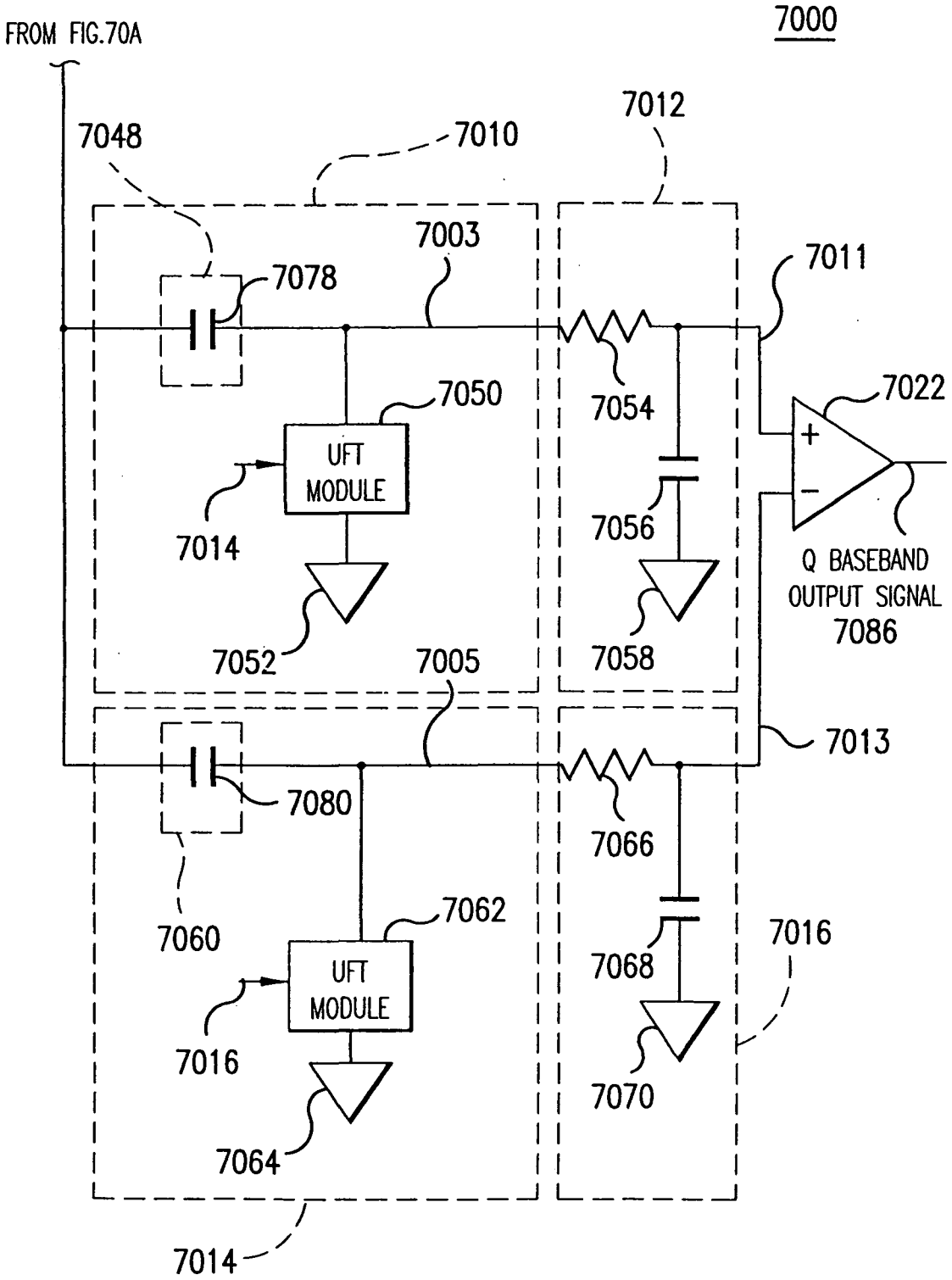
FROM FIG.70A
7000
7048
7010
7012
7003
7078
7011
7050
7054
7022
UFT MODULE
7014
7056
Q BASEBAND OUTPUT SIGNAL
7086
7052
7005
7058
7013
7080
7066
7060
7062
7068
7016
UFT MODULE
7016
7070
7064
7014

FIG.70A-1

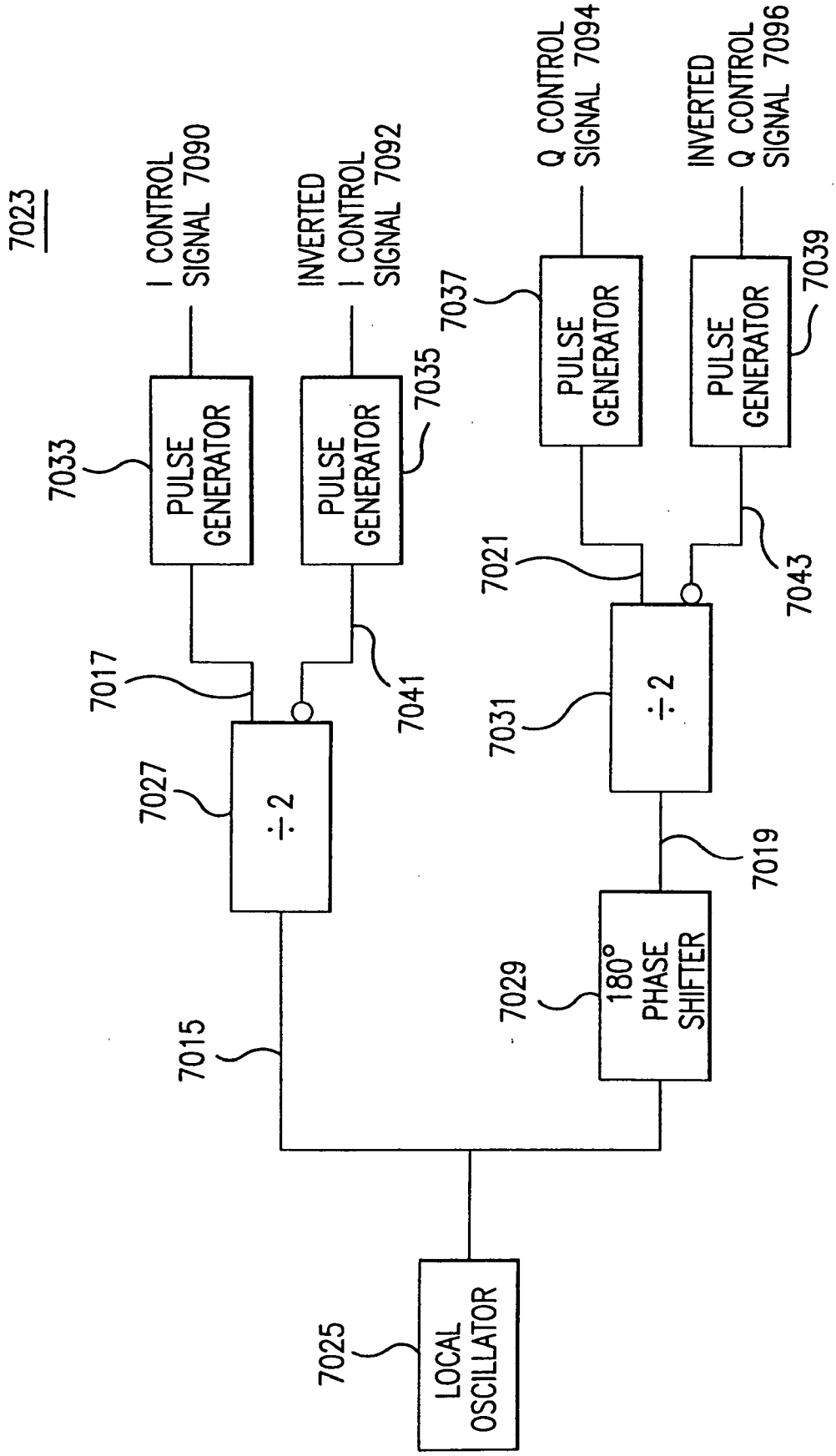
7023
I CONTROL SIGNAL 7090
INVERTED I CONTROL SIGNAL 7092
Q CONTROL SIGNAL 7094
INVERTED Q CONTROL SIGNAL 7096
7033
PULSE GENERATOR
7035
PULSE GENERATOR
7037
PULSE GENERATOR
7039
PULSE GENERATOR
7017
7041
7021
7043
7027
÷ 2
7031
÷ 2
7019
7029
180° PHASE SHIFTER
7015
7025
LOCAL OSCILLATOR

FIG.70B

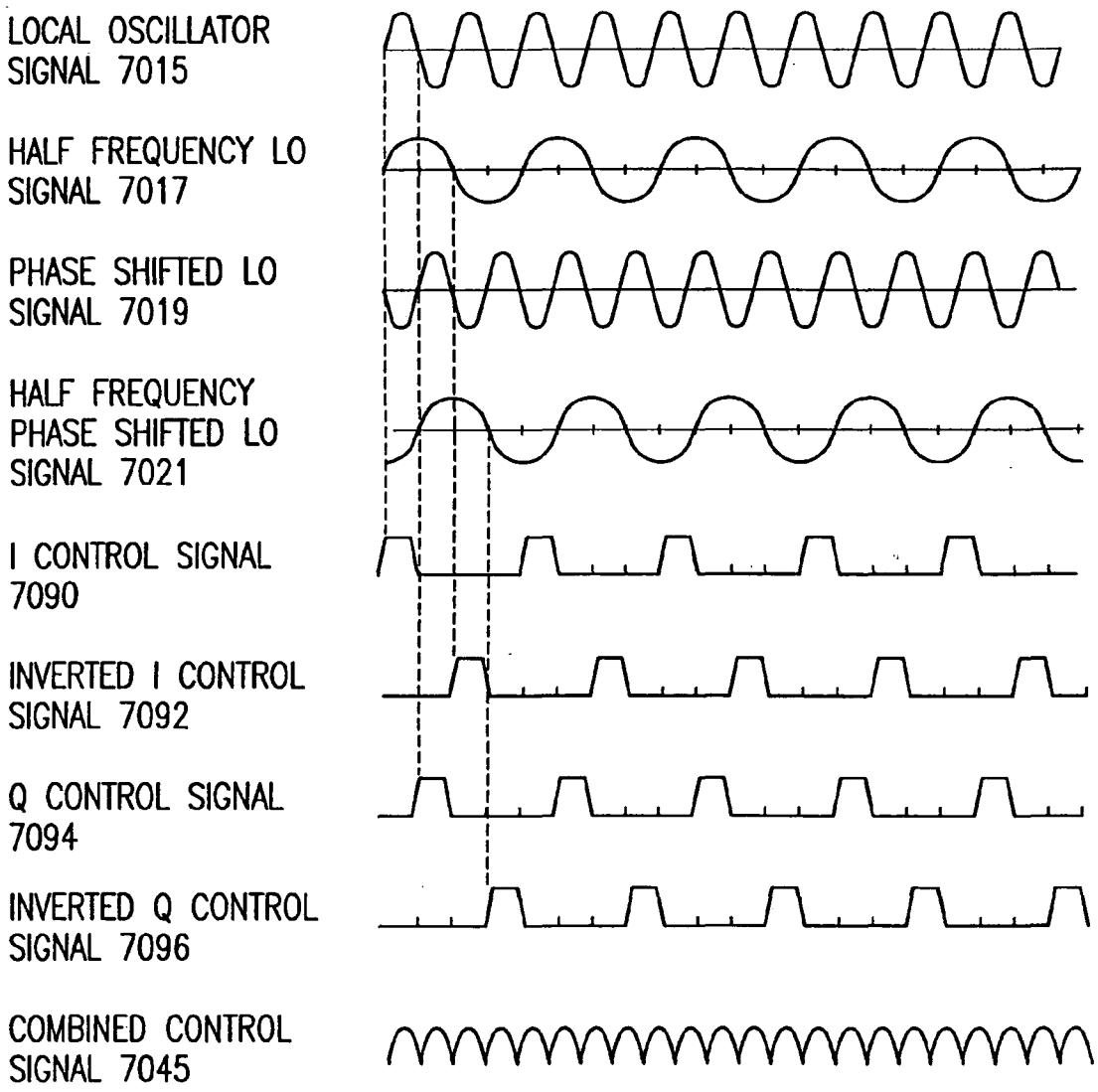
LOCAL OSCILLATOR SIGNAL 7015
HALF FREQUENCY LO SIGNAL 7017
PHASE SHIFTED LO SIGNAL 7019
HALF FREQUENCY PHASE SHIFTED LO SIGNAL 7021
I CONTROL SIGNAL 7090
INVERTED I CONTROL SIGNAL 7092
Q CONTROL SIGNAL 7094
INVERTED Q CONTROL SIGNAL 7096
COMBINED CONTROL SIGNAL 7045

FIG.70C

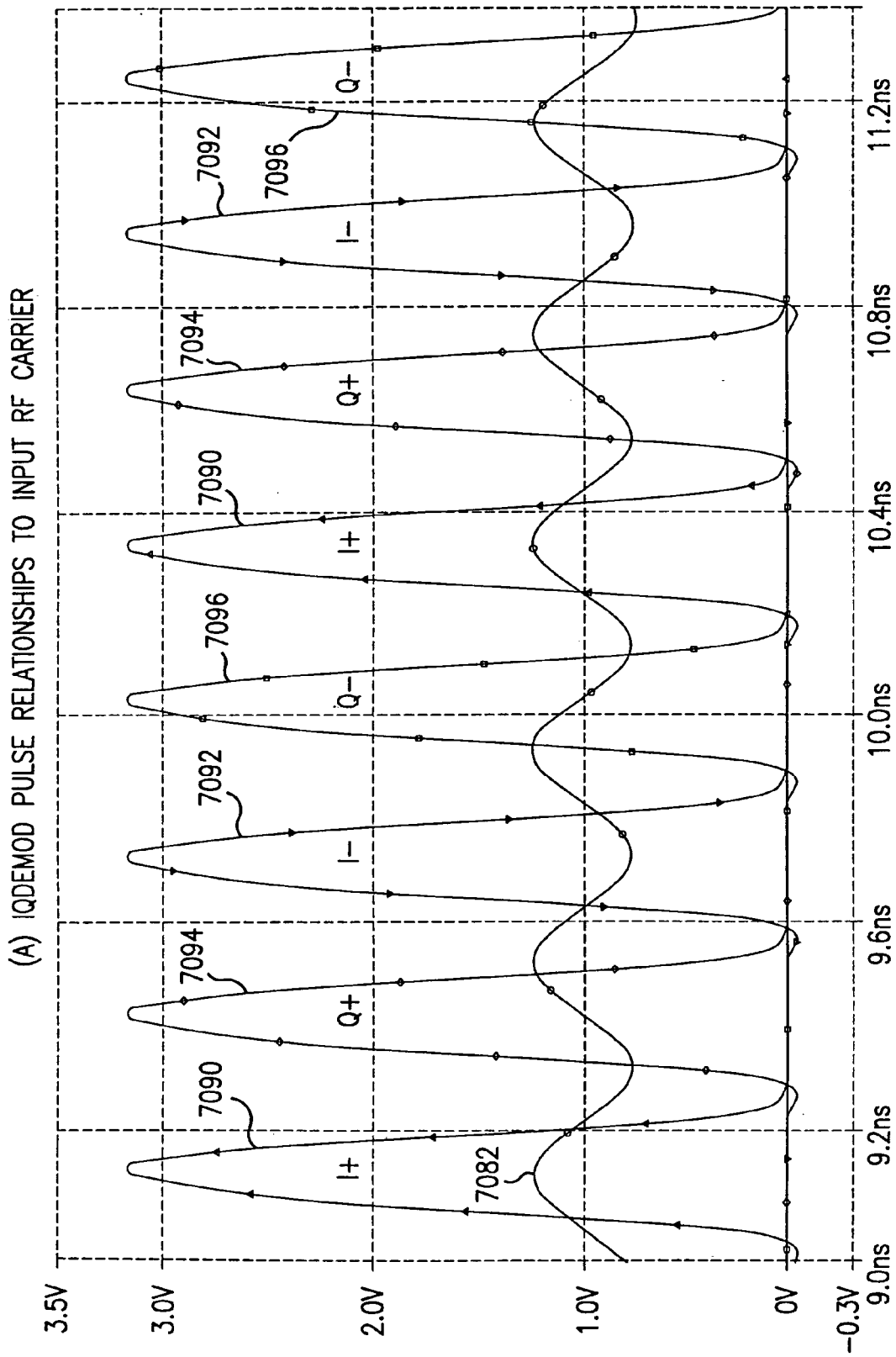
(A) IQDEMOD PULSE RELATIONSHIPS TO INPUT RF CARRIER
3.5V
3.0V
2.0V
1.0V
0V
−0.3V
9.0ns
9.2ns
9.6ns
10.0ns
10.4ns
10.8ns
11.2ns
7090
7094
7092
7096
7082
I+
Q+
I−
Q−

FIG. 70D

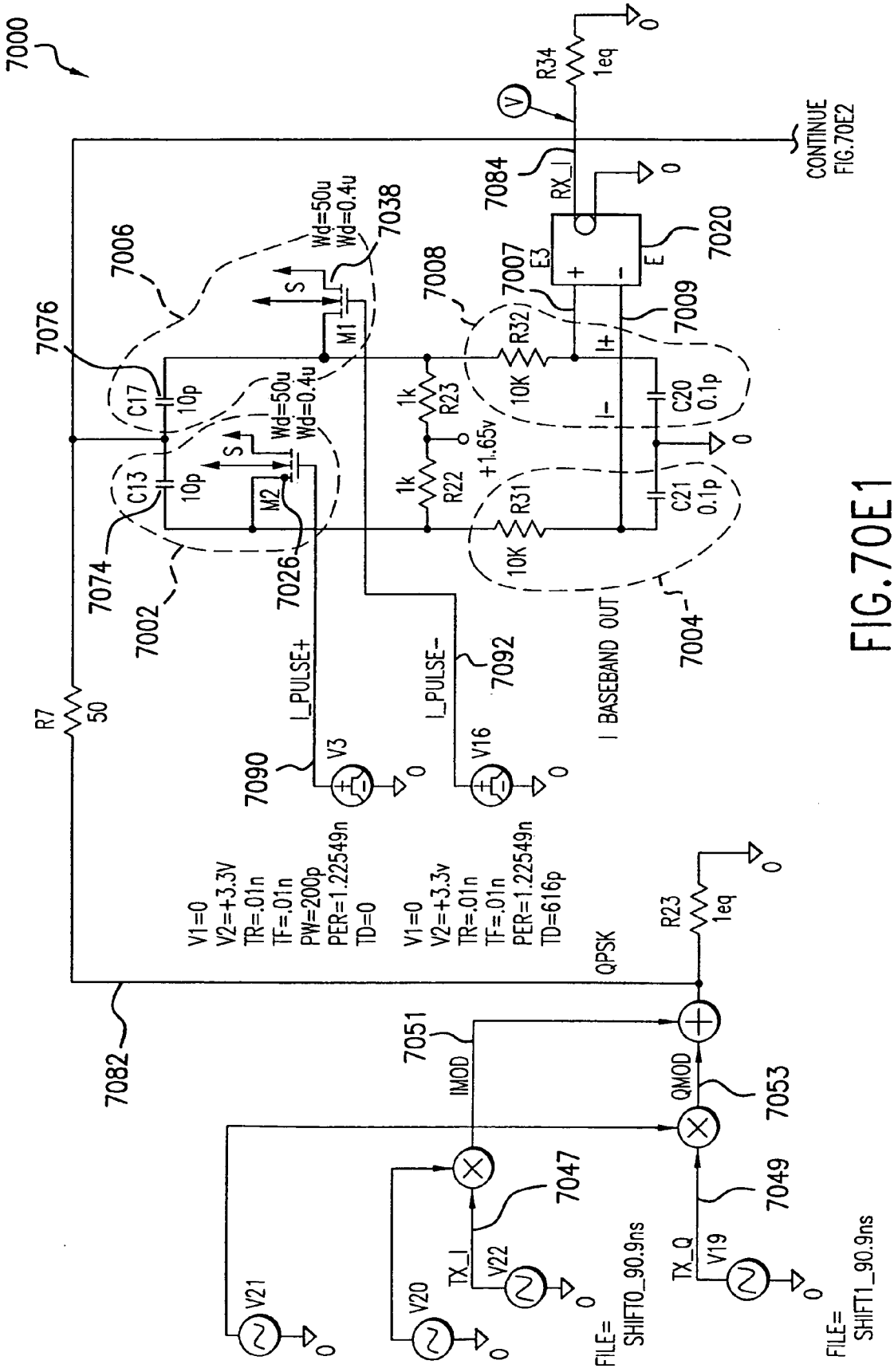
7000
7076
7006
7038
Wd=50u
Wd=0.4u
M1
S
C17
10p
C13
10p
M2
7074
7002
7026
7008
7007
E3
E
7020
7009
R32
10K
R23
1k
R22
1k
+1.65v
R31
10K
C20
0.1p
C21
0.1p
I+
I-
7004
I BASEBAND OUT
7084
RX_I
R34
1eq
CONTINUE
FIG.70E2
R7
50
I_PULSE+
I_PULSE-
7092
7090
V3
V16
V1=0
V2=+3.3V
TR=.01n
TF=.01n
PW=200p
PER=1.22549n
TD=0
V1=0
V2=+3.3v
TR=.01n
TF=.01n
PER=1.22549n
TD=616p
QPSK
R23
1eq
7082
7051
IMOD
QMOD
7053
7047
7049
TX_I
V22
TX_Q
V19
V21
V20
FILE=
SHIFT0_90.9ns
FILE=
SHIFT1_90.9ns

FIG.70E1

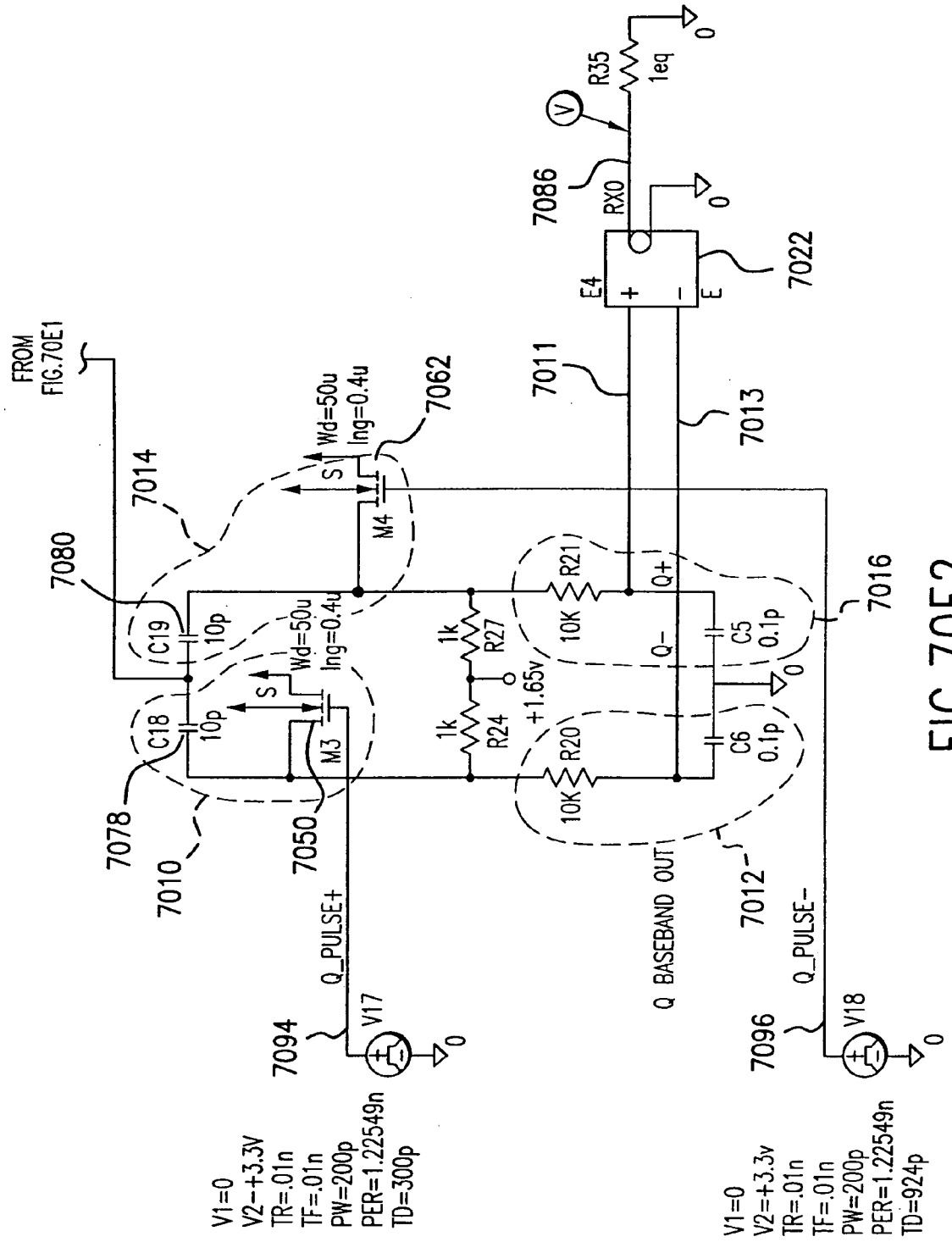
FROM FIG.70E1
7080
7014
7062
Wd=50u
Ing=0.4u
S
M4
C19
10p
C18
10p
M3
7078
7010
7050
1k
R27
1k
R24
+1.65v
R21
10K
R20
10K
Q+
Q-
C5
0.1p
C6
0.1p
7016
7012
Q BASEBAND OUT
7011
7013
E4
E
7022
RX0
7086
R35
1eq
V
0
Q_PULSE+
Q_PULSE-
7094
V17
7096
V18
V1=0
V2=+3.3V
TR=.01n
TF=.01n
PW=200p
PER=1.22549n
TD=300p
V1=0
V2=+3.3v
TR=.01n
TF=.01n
PW=200p
PER=1.22549n
TD=924p

FIG.70E2

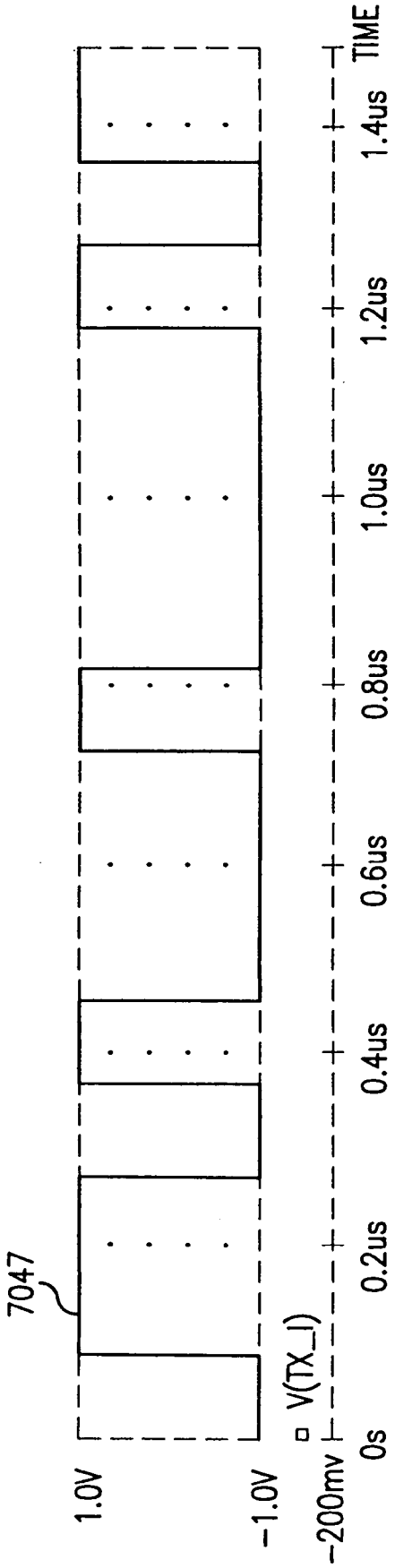

FIG.70F

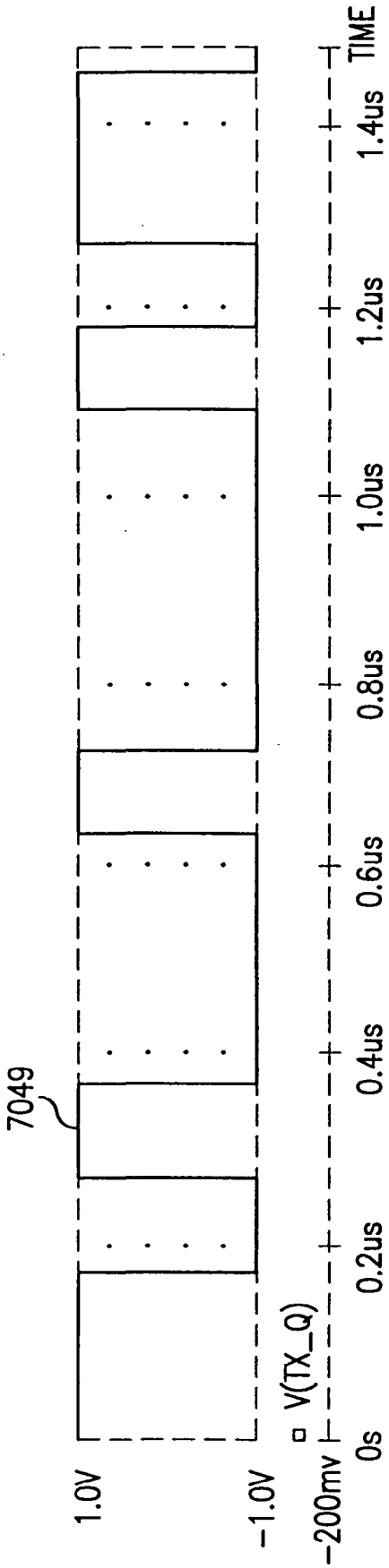

FIG.70G

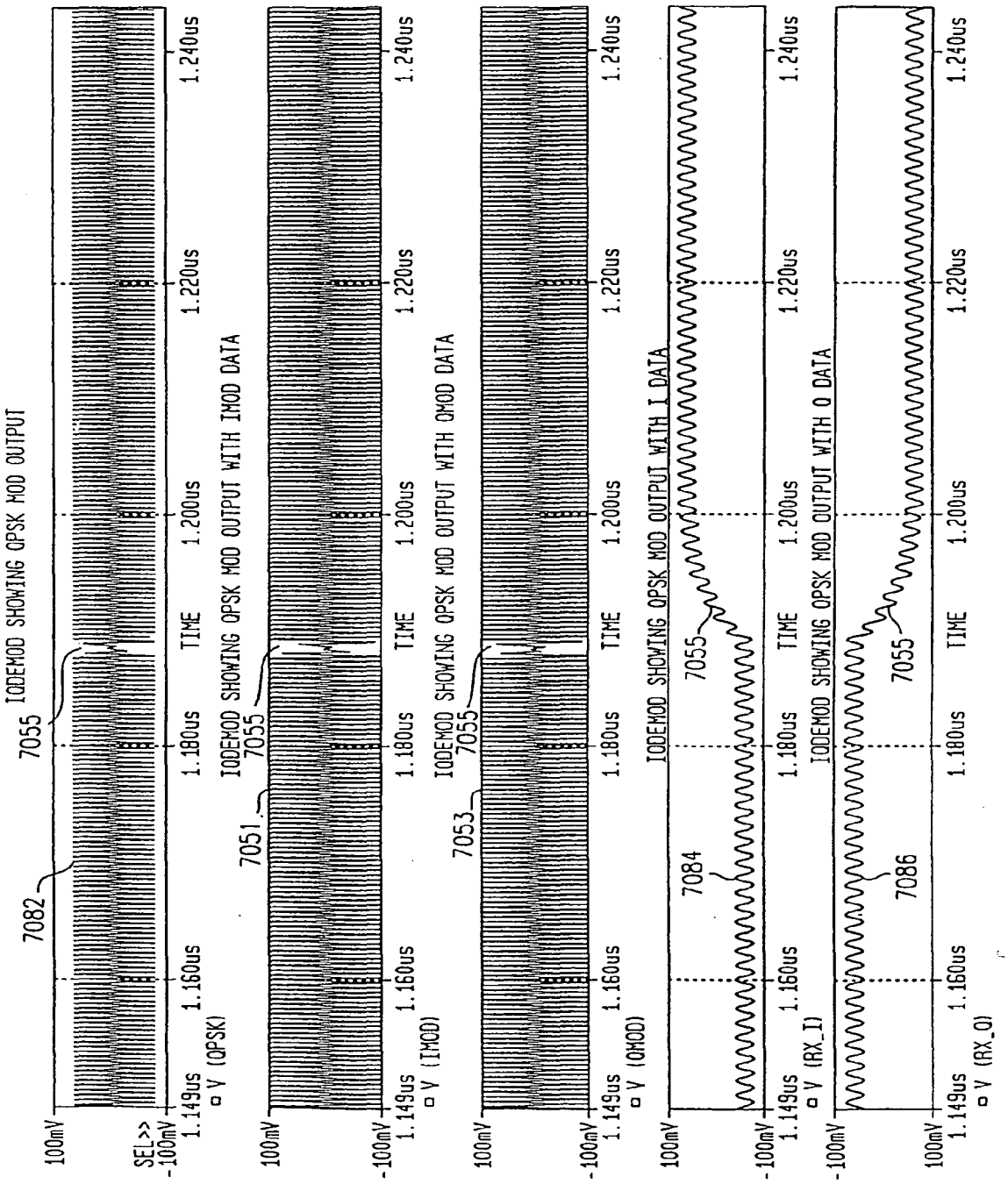

FIG. 70H

FIG. 70I

FIG. 70J

FIG. 70K

FIG. 70L

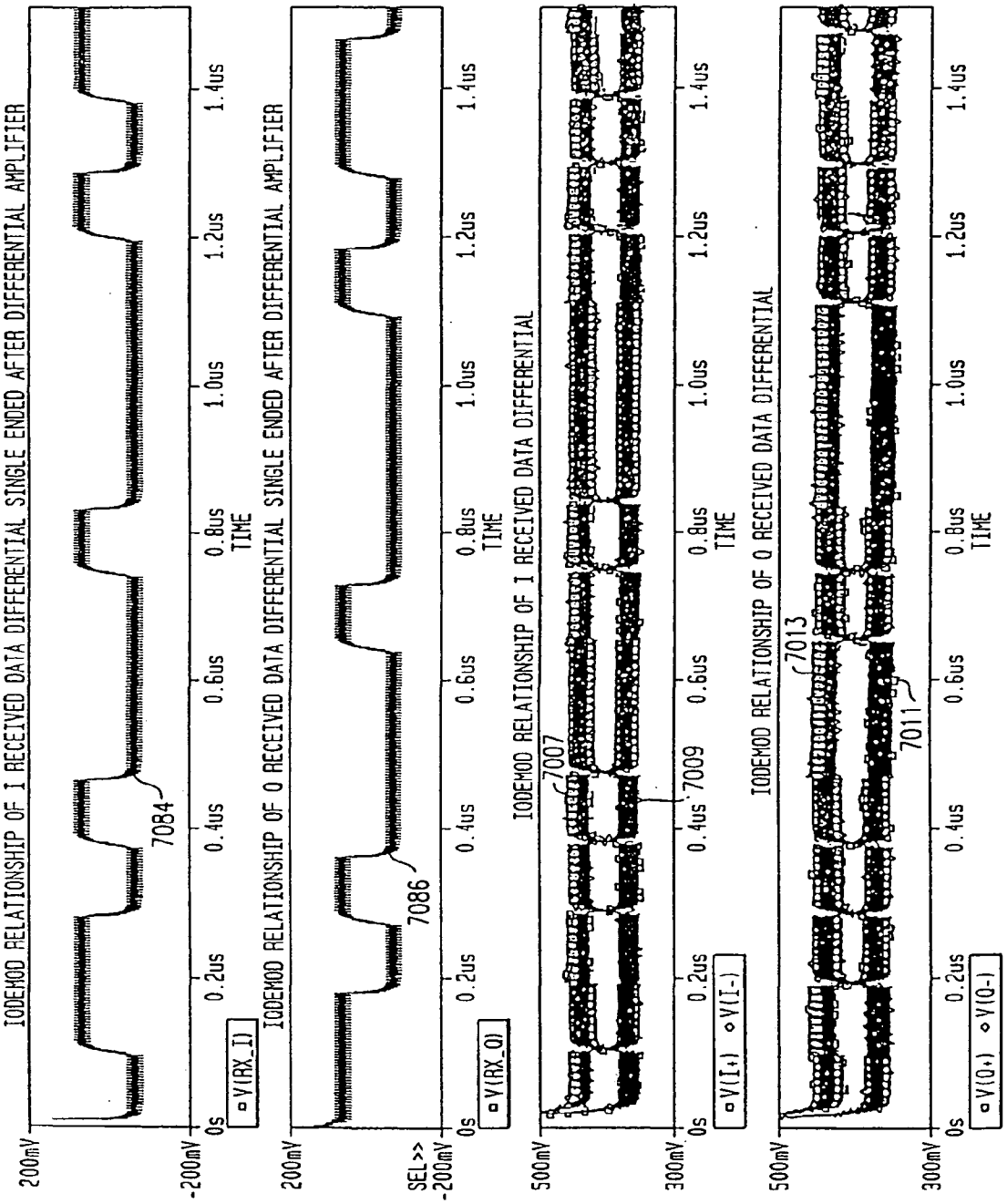

FIG. 70M

FIG. 70N

FIG. 70O

FIG. 70P

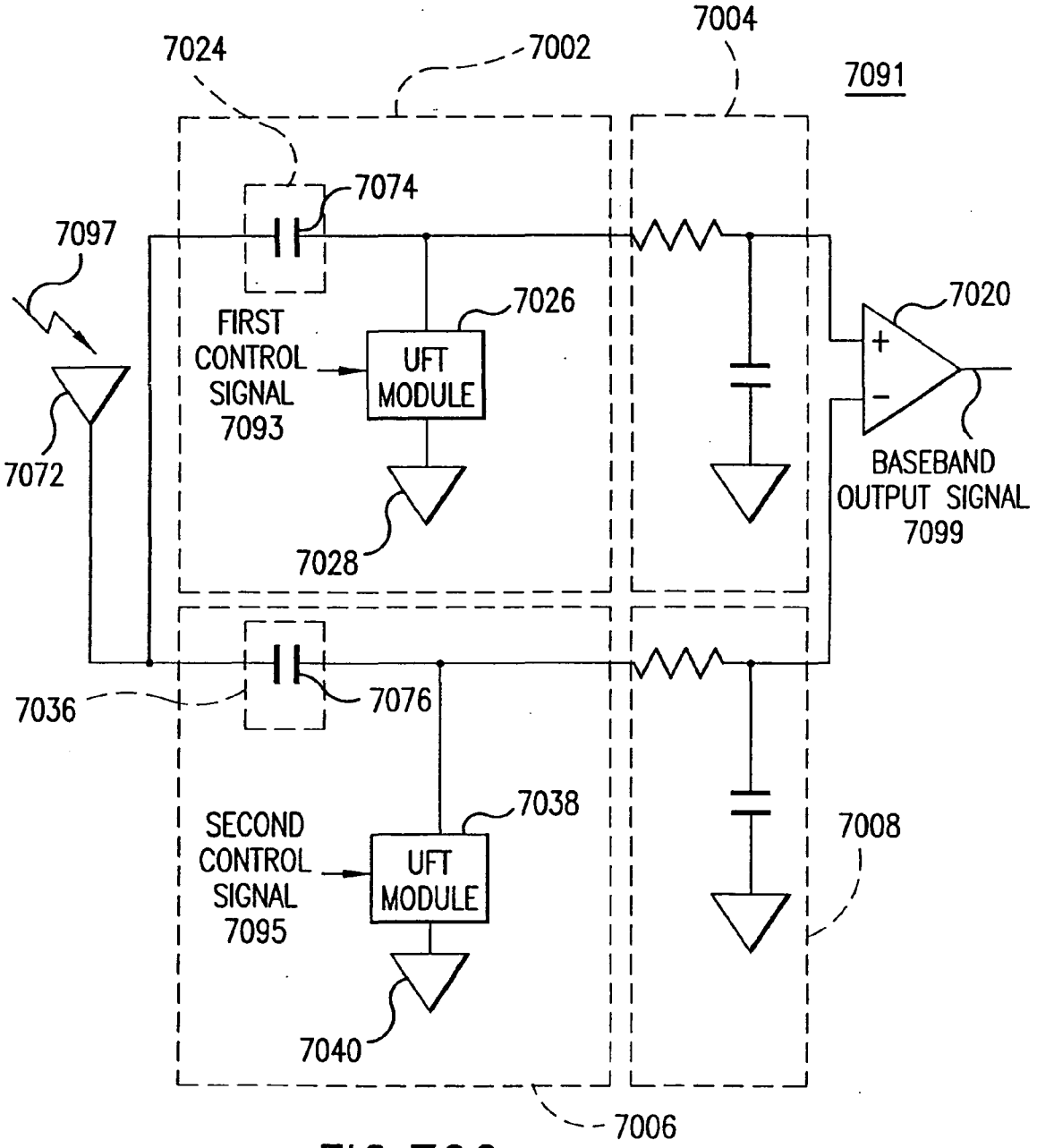
7024
7002
7004
7091
7074
7097
7026
FIRST
CONTROL
SIGNAL
7093
UFT
MODULE
7020
+
−
7072
BASEBAND
OUTPUT SIGNAL
7099
7028
7036
7076
7038
SECOND
CONTROL
SIGNAL
7095
UFT
MODULE
7008
7040
7006

FIG.70Q

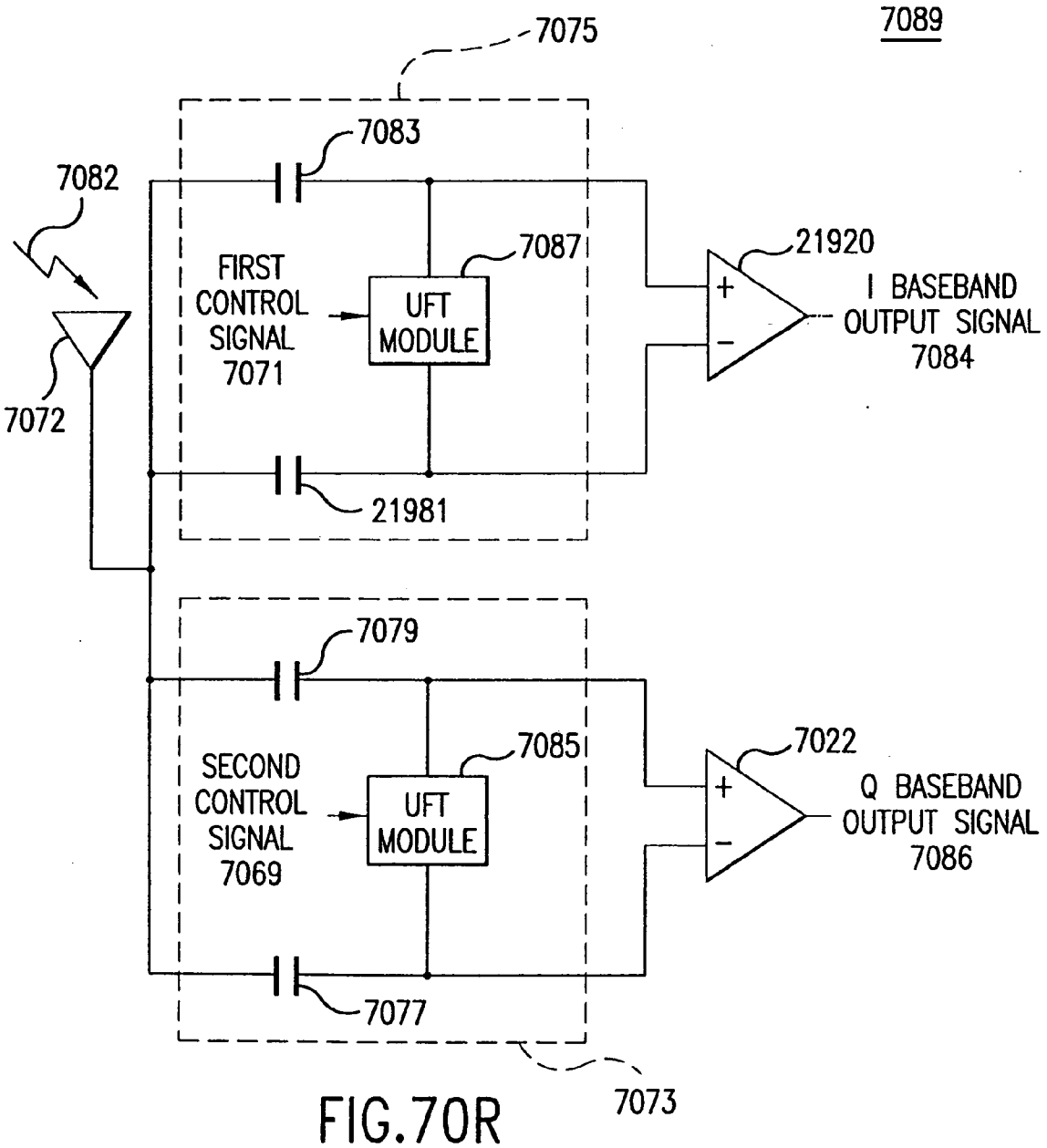
7089
7075
7083
7082
7087
21920
FIRST
CONTROL
SIGNAL
7071
UFT
MODULE
I BASEBAND
OUTPUT SIGNAL
7084
7072
21981
7079
7085
7022
SECOND
CONTROL
SIGNAL
7069
UFT
MODULE
Q BASEBAND
OUTPUT SIGNAL
7086
7077
7073

FIG.70R

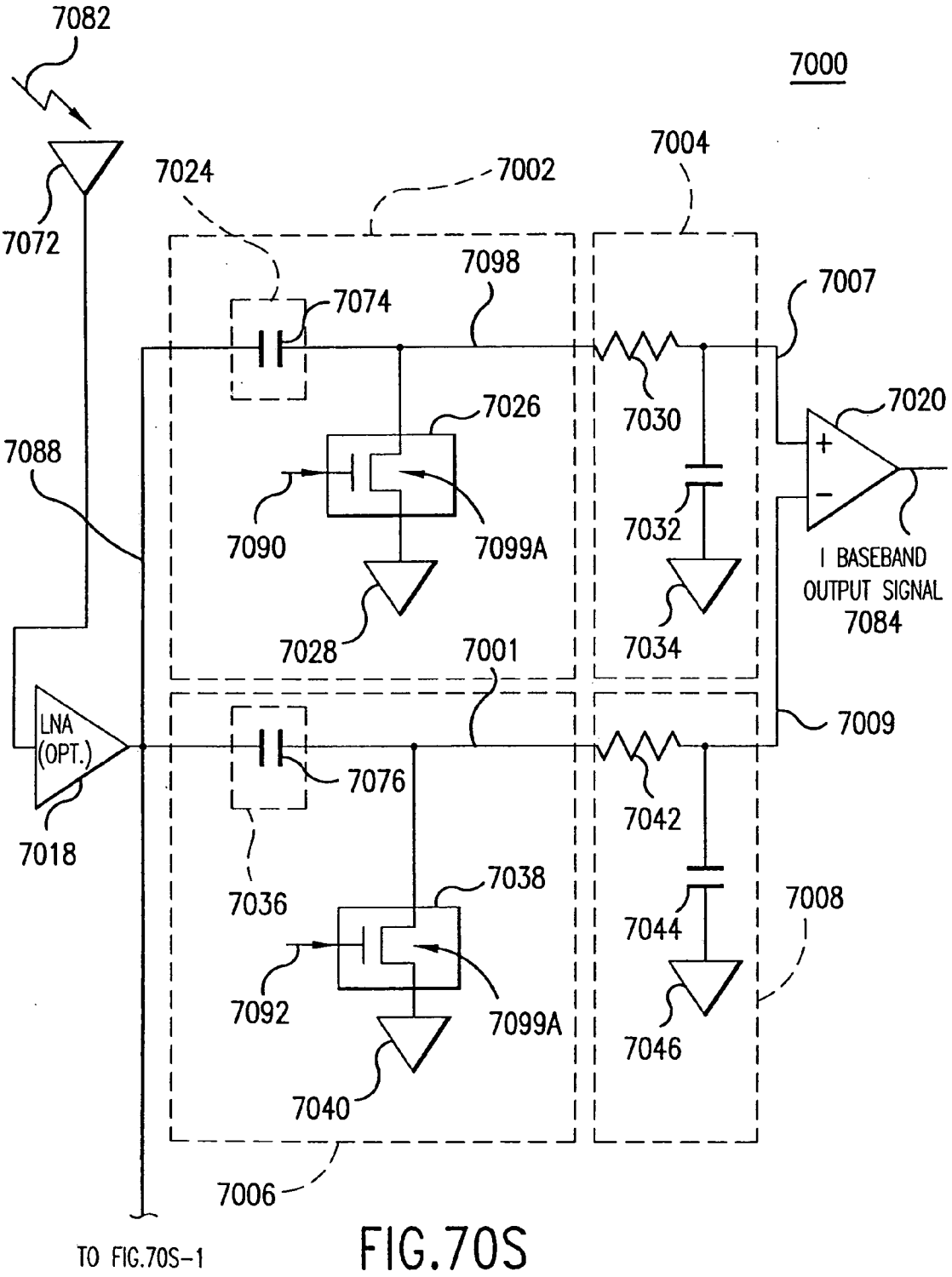
7082
7000
7004
7024
7002
7072
7098
7074
7007
7026
7020
7088
7030
7090
7099A
7032
I BASEBAND
OUTPUT SIGNAL
7084
7028
7001
7034
LNA
(OPT.)
7009
7076
7042
7018
7036
7038
7008
7044
7092
7099A
7046
7040
7006
TO FIG.70S-1

FIG.70S

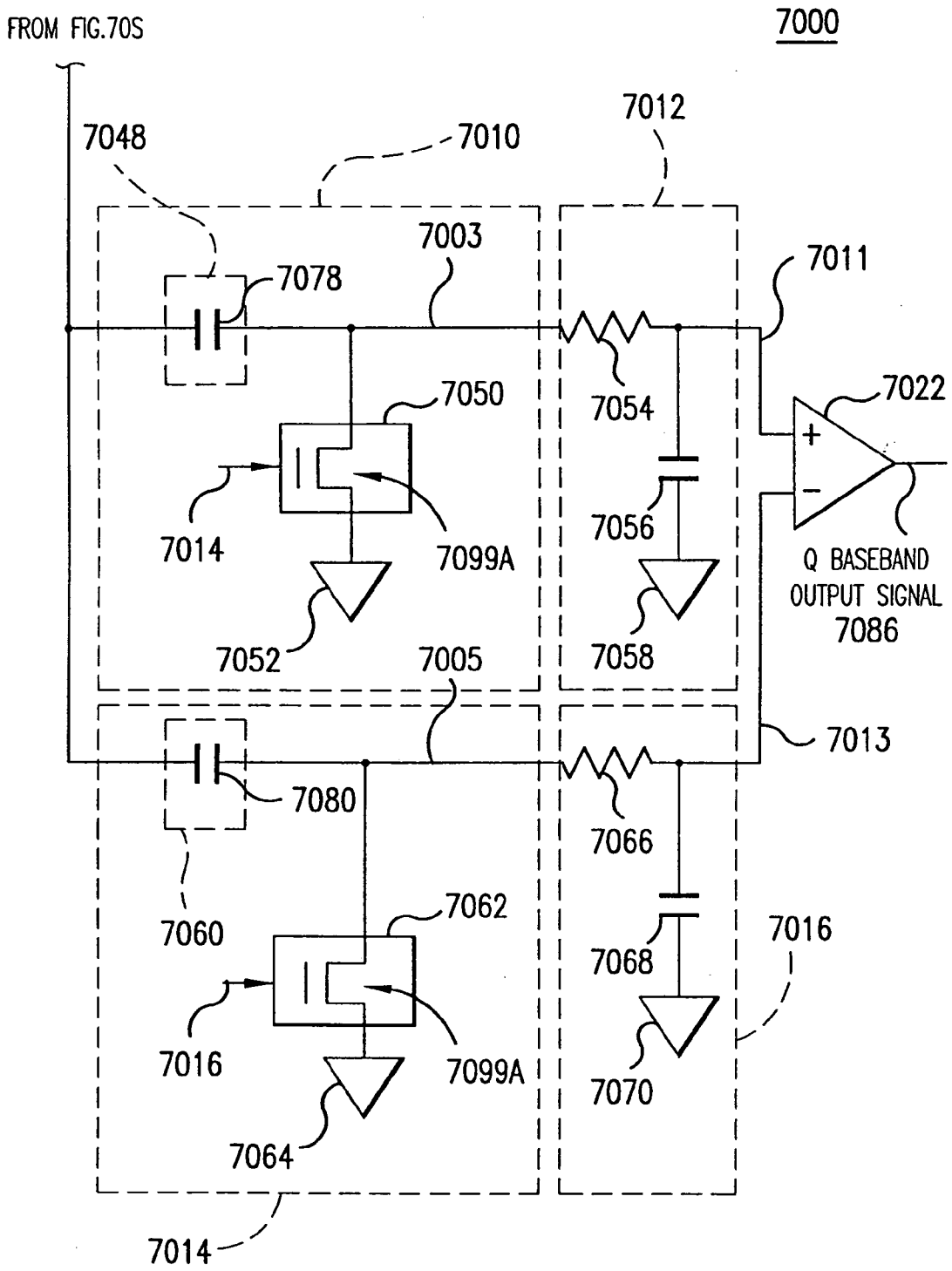
FROM FIG.70S
7000
7048
7010
7012
7003
7078
7011
7050
7054
7022
7014
7099A
7056
Q BASEBAND
OUTPUT SIGNAL
7086
7052
7005
7058
7013
7080
7066
7060
7062
7068
7016
7016
7099A
7070
7064
7014

FIG.70S-1

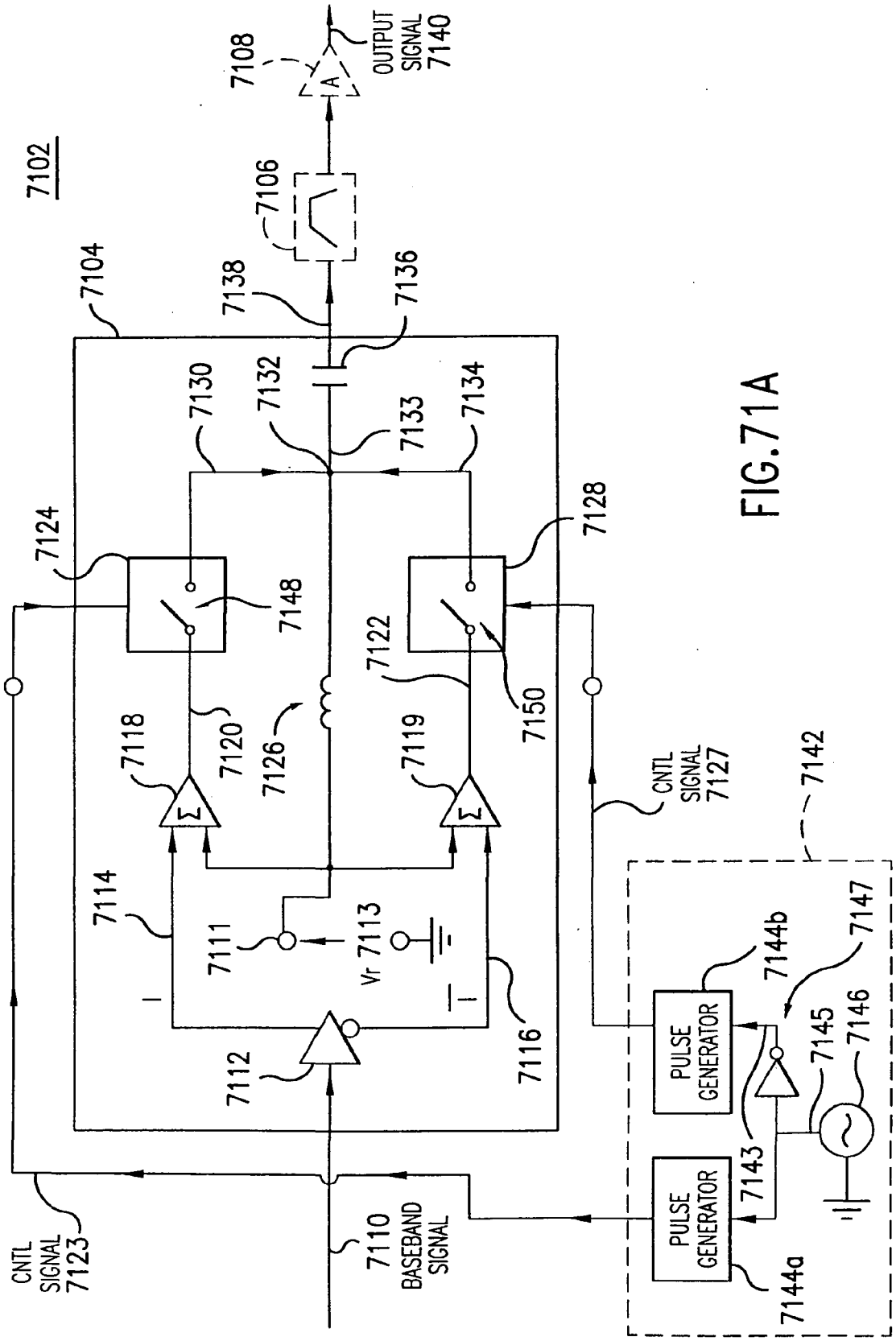
7102
7104
7106
7108
OUTPUT SIGNAL 7140
7138
7136
7130
7132
7133
7134
7124
7128
7148
7122
7150
7118
7120
7126
7119
CNTL SIGNAL 7127
7142
7114
7111
Vr 7113
7116
7112
PULSE GENERATOR
7144b
7147
7145
7146
7143
PULSE GENERATOR
7144a
CNTL SIGNAL 7123
7110 BASEBAND SIGNAL

FIG.71A

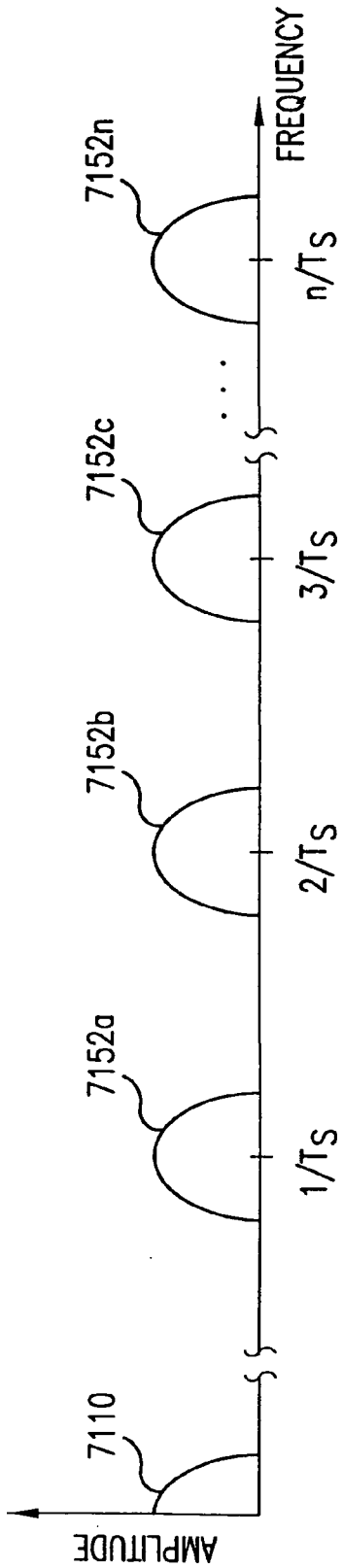

FIG.71B

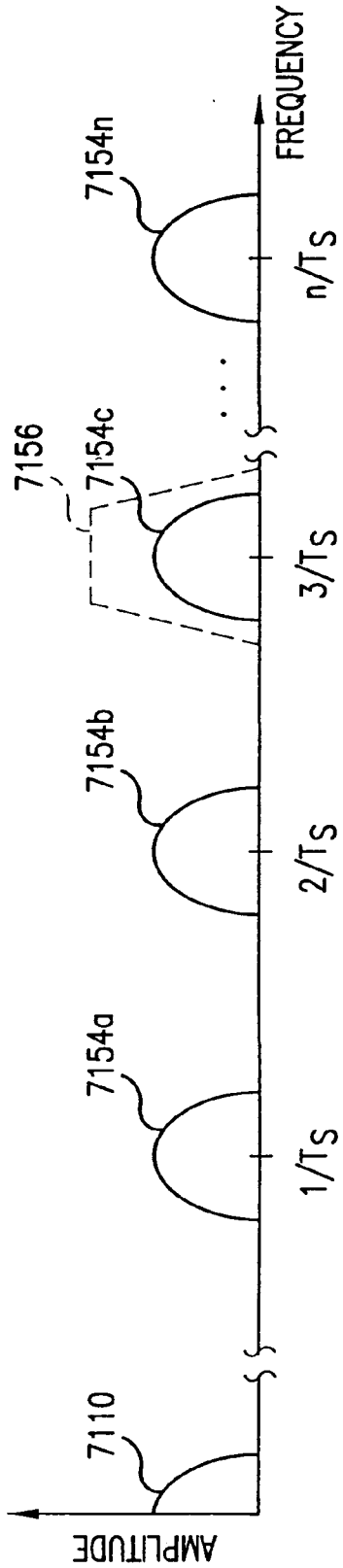

FIG.71C

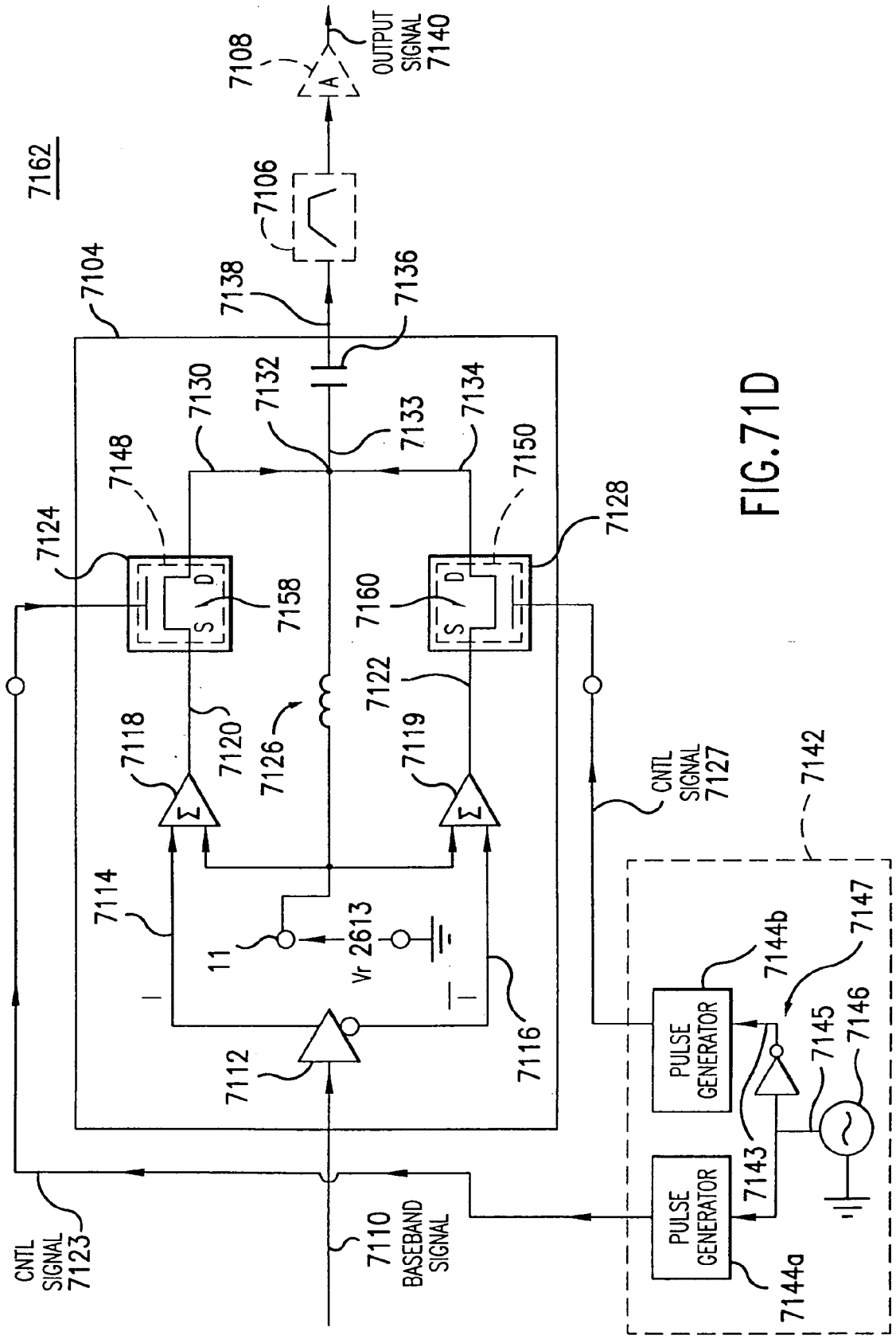
7162
7104
7108
OUTPUT SIGNAL 7140
7106
7138
7136
7130
7132
7133
7134
7148
7150
7124
7128
7158
7160
7122
7118
7120
7126
7119
7114
11
Vr 2613
7112
7116
CNTL SIGNAL 7123
7110 BASEBAND SIGNAL
CNTL SIGNAL 7127
7142
PULSE GENERATOR
PULSE GENERATOR
7144b
7147
7145
7146
7143
7144a

FIG.71D

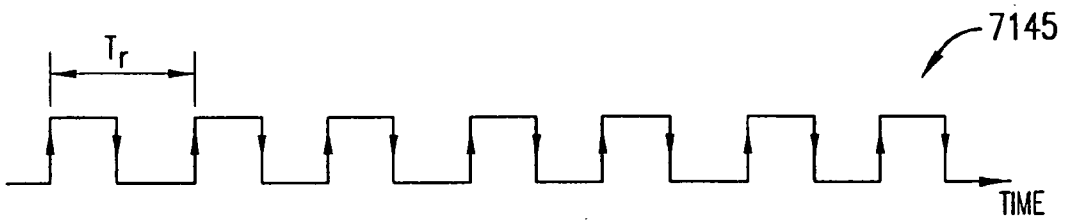

FIG.72A

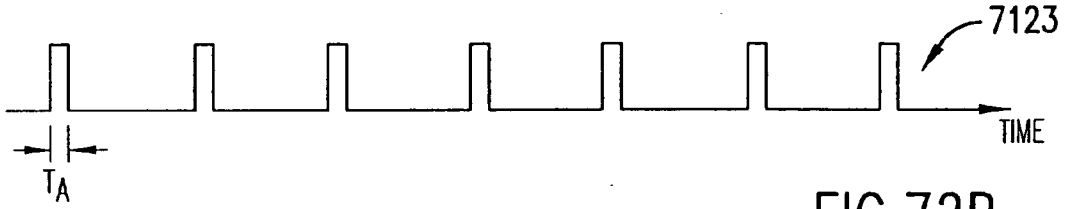

FIG.72B

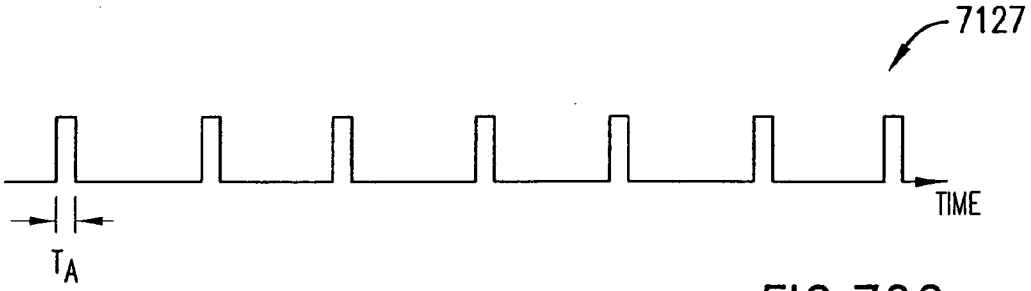

FIG.72C

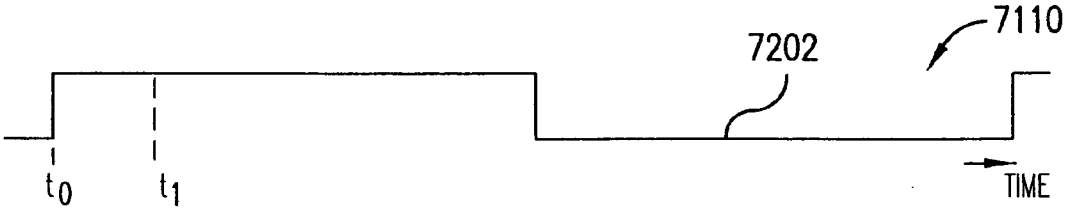

FIG.72D

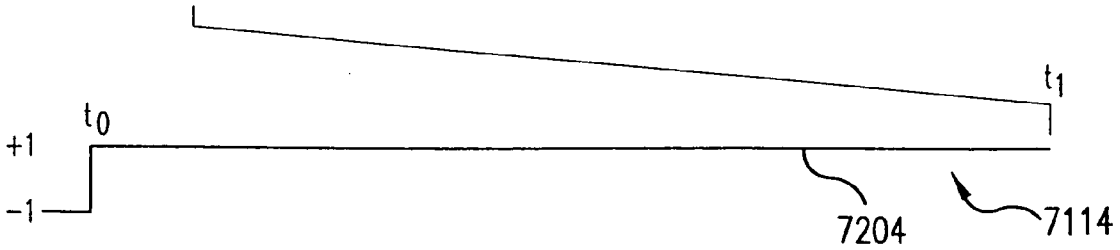

FIG.72E

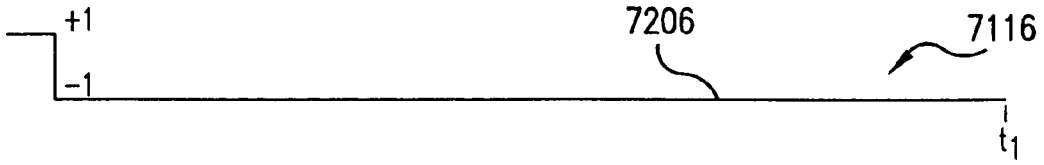

FIG.72F

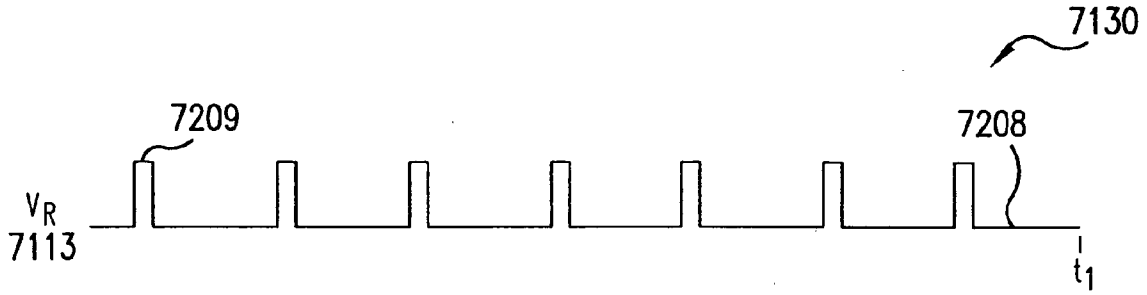

FIG.72G

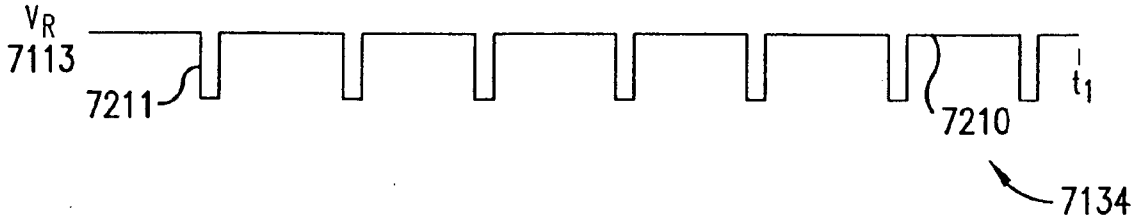

FIG.72H

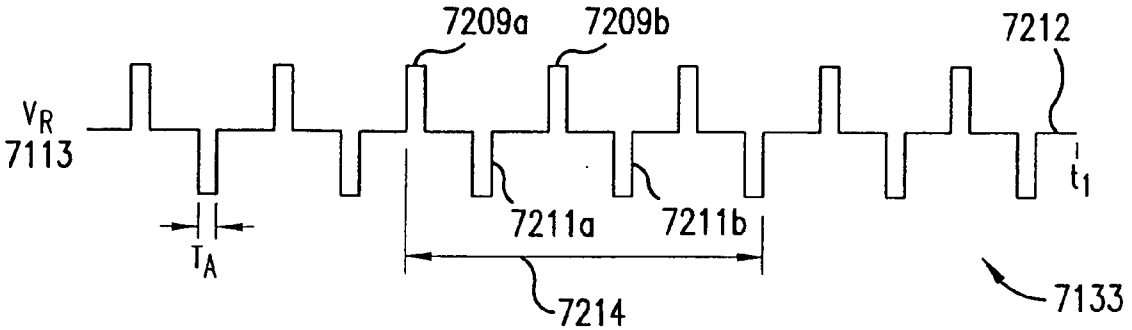

FIG.72I

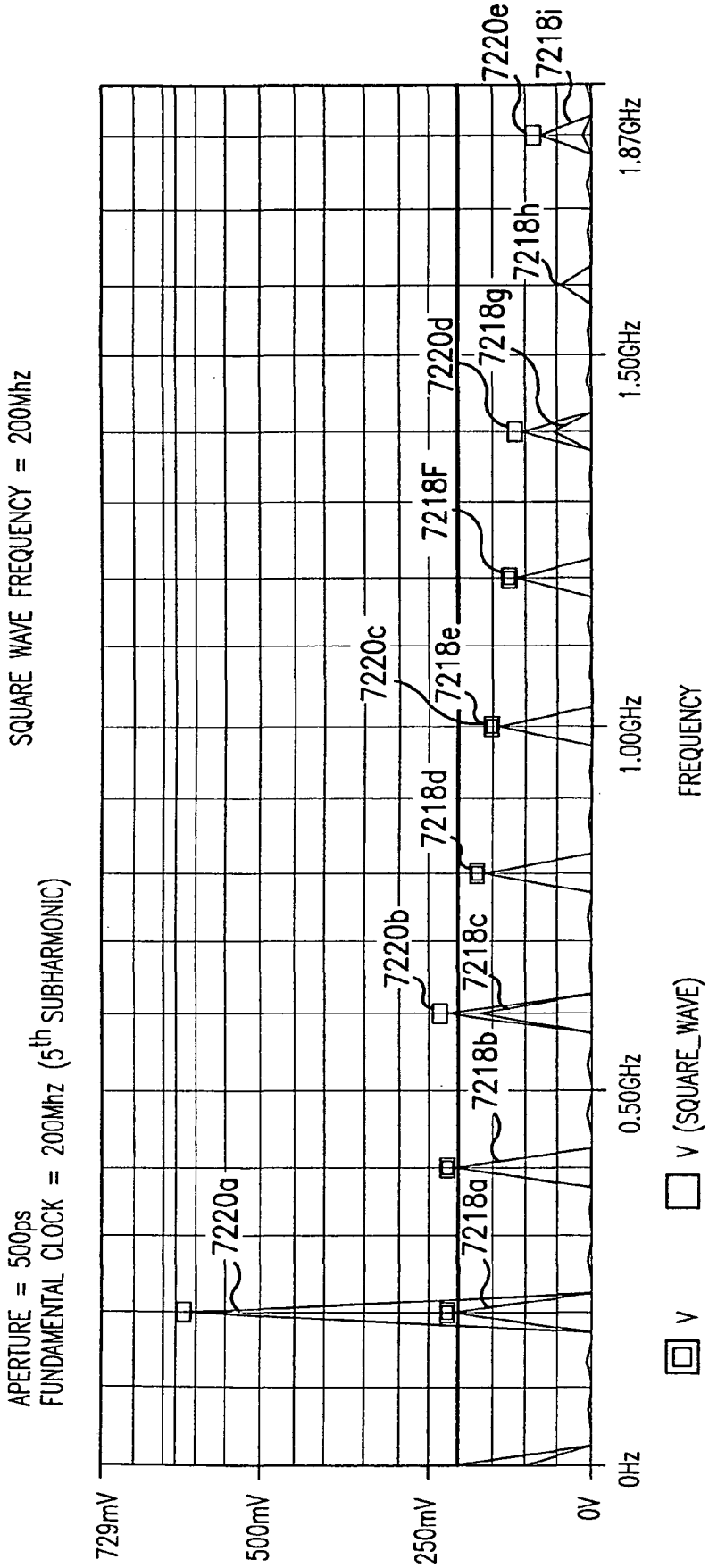
APERTURE = 500ps
FUNDAMENTAL CLOCK = 200Mhz (5th SUBHARMONIC)
SQUARE WAVE FREQUENCY = 200Mhz
729mV
500mV
250mV
0V
0Hz
0.50GHz
1.00GHz
1.50GHz
1.87GHz
FREQUENCY
7220a
7220b
7220c
7220d
7220e
7218a
7218b
7218c
7218d
7218e
7218F
7218g
7218h
7218i
V
V (SQUARE_WAVE)

FIG.72J

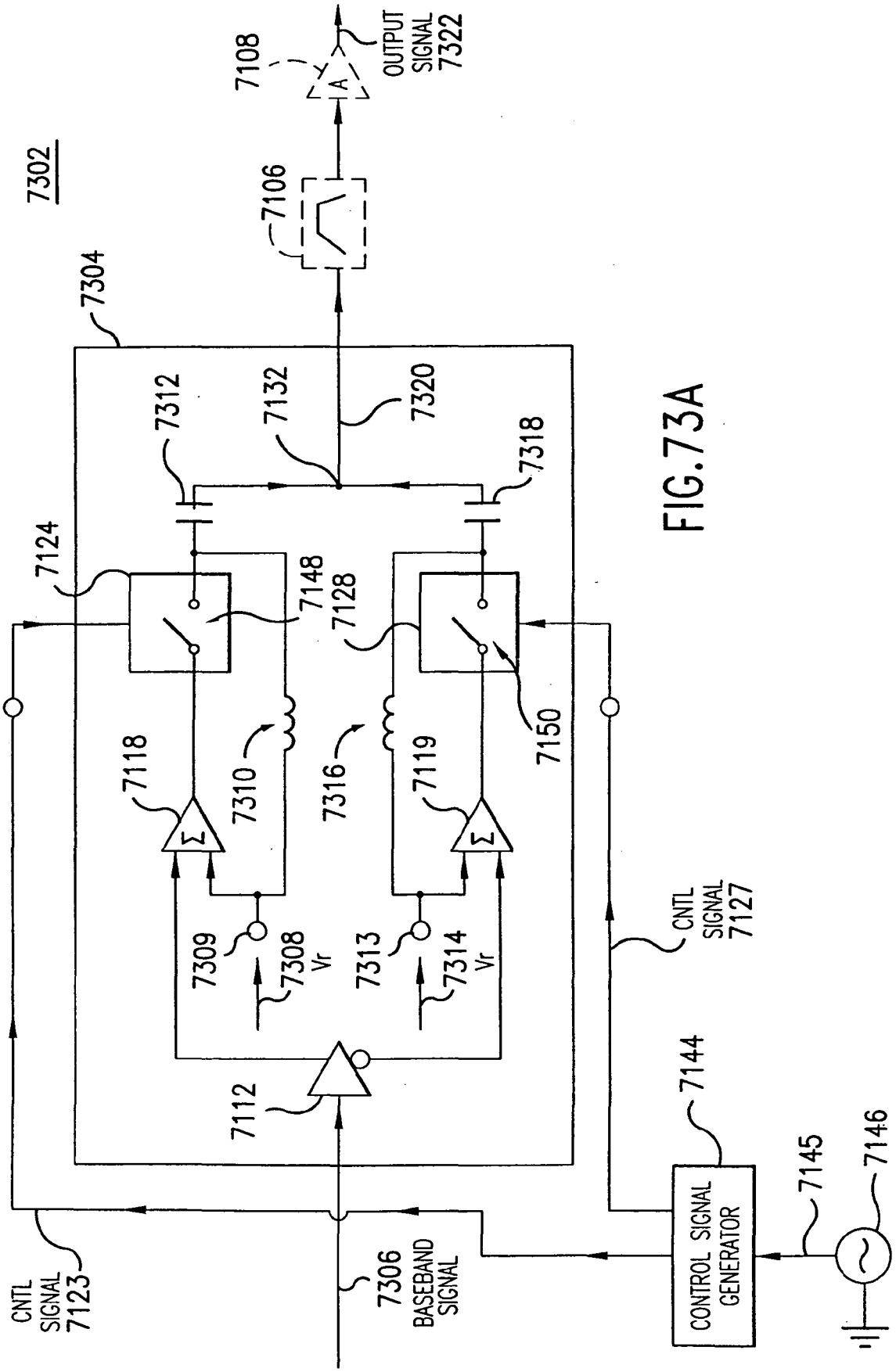
7302
7304
7108
A
OUTPUT SIGNAL 7322
7106
7312
7132
7320
7318
7124
7148
7128
7150
7118
7310
7316
7119
7309
7308 Vr
7313
7314 Vr
7112
CNTL SIGNAL 7127
7144
7145
7146
CONTROL SIGNAL GENERATOR
CNTL SIGNAL 7123
7306 BASEBAND SIGNAL

FIG.73A

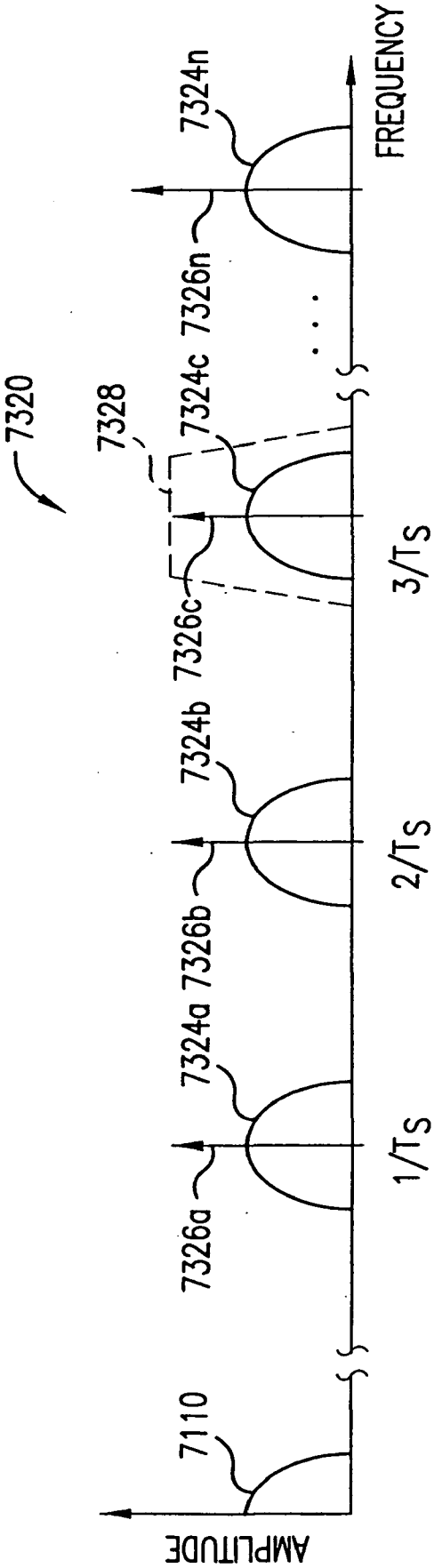
7320
7328
7110
7324a
7326a
7324b
7326b
7326c
7324c
7326n
7324n
AMPLITUDE
FREQUENCY
1/Ts
2/Ts
3/Ts

FIG. 73B

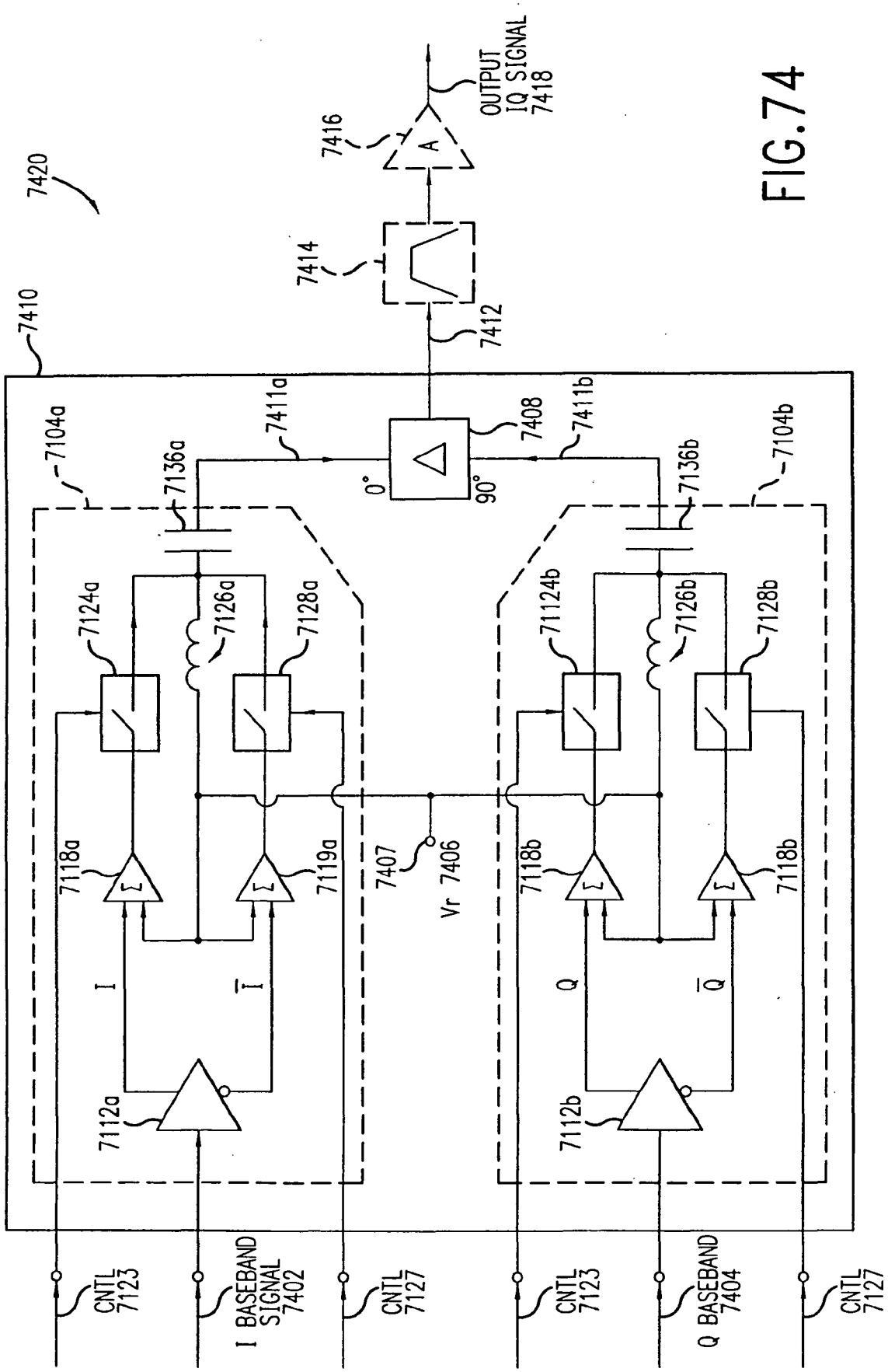
7420
7410
7416
A
OUTPUT IQ SIGNAL 7418
7414
7412
7104a
7136a
7411a
7408
7411b
7136b
7104b
0°
90°
7124a
7126a
7128a
7124b
7126b
7128b
7118a
7119a
7407
Vr 7406
7118b
7118b
I
Ī
Q
Q̄
7112a
7112b
CNTL 7123
I BASEBAND SIGNAL 7402
CNTL 7127
CNTL 7123
Q BASEBAND 7404
CNTL 7127

FIG.74

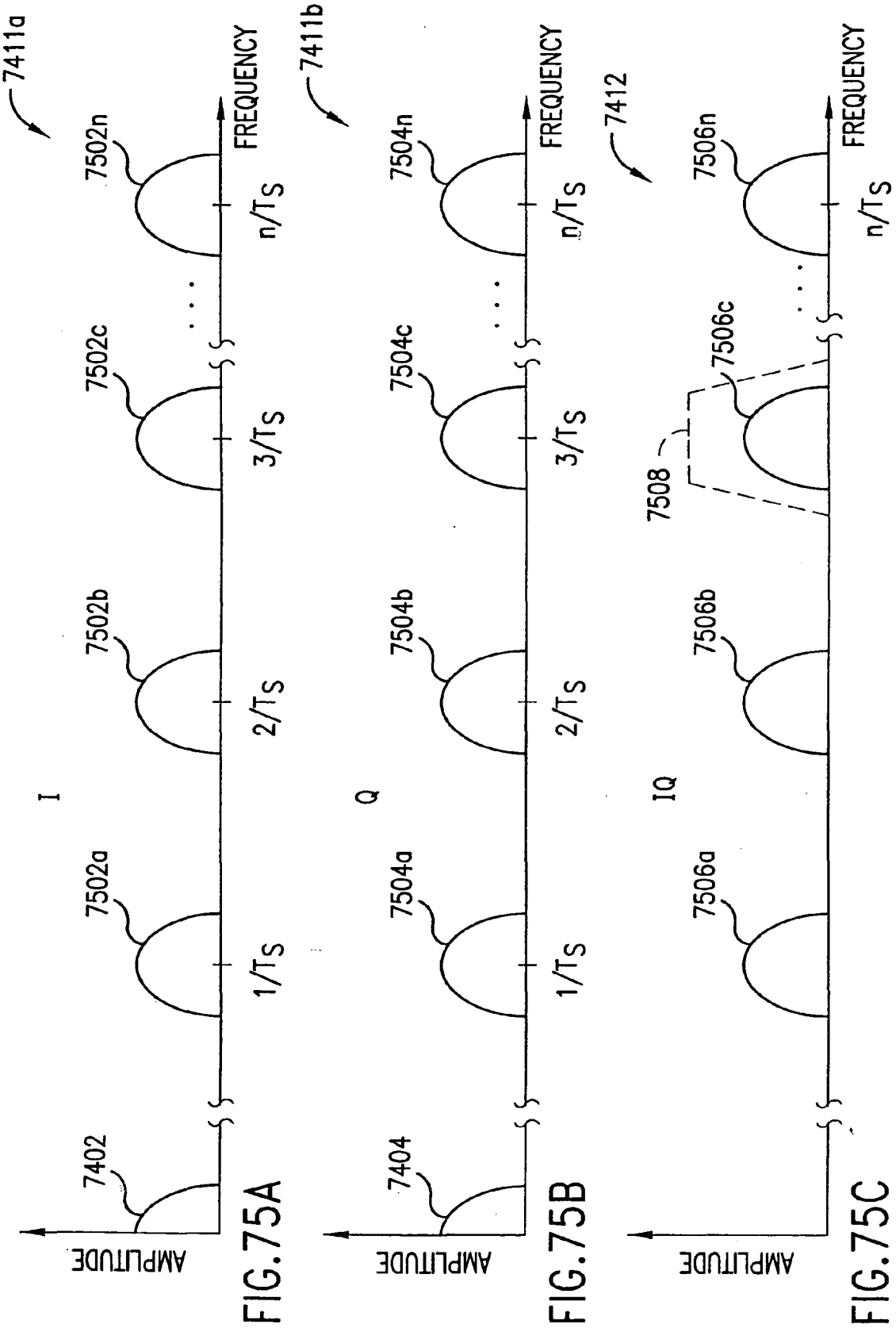

FIG.75A

FIG.75B

FIG.75C

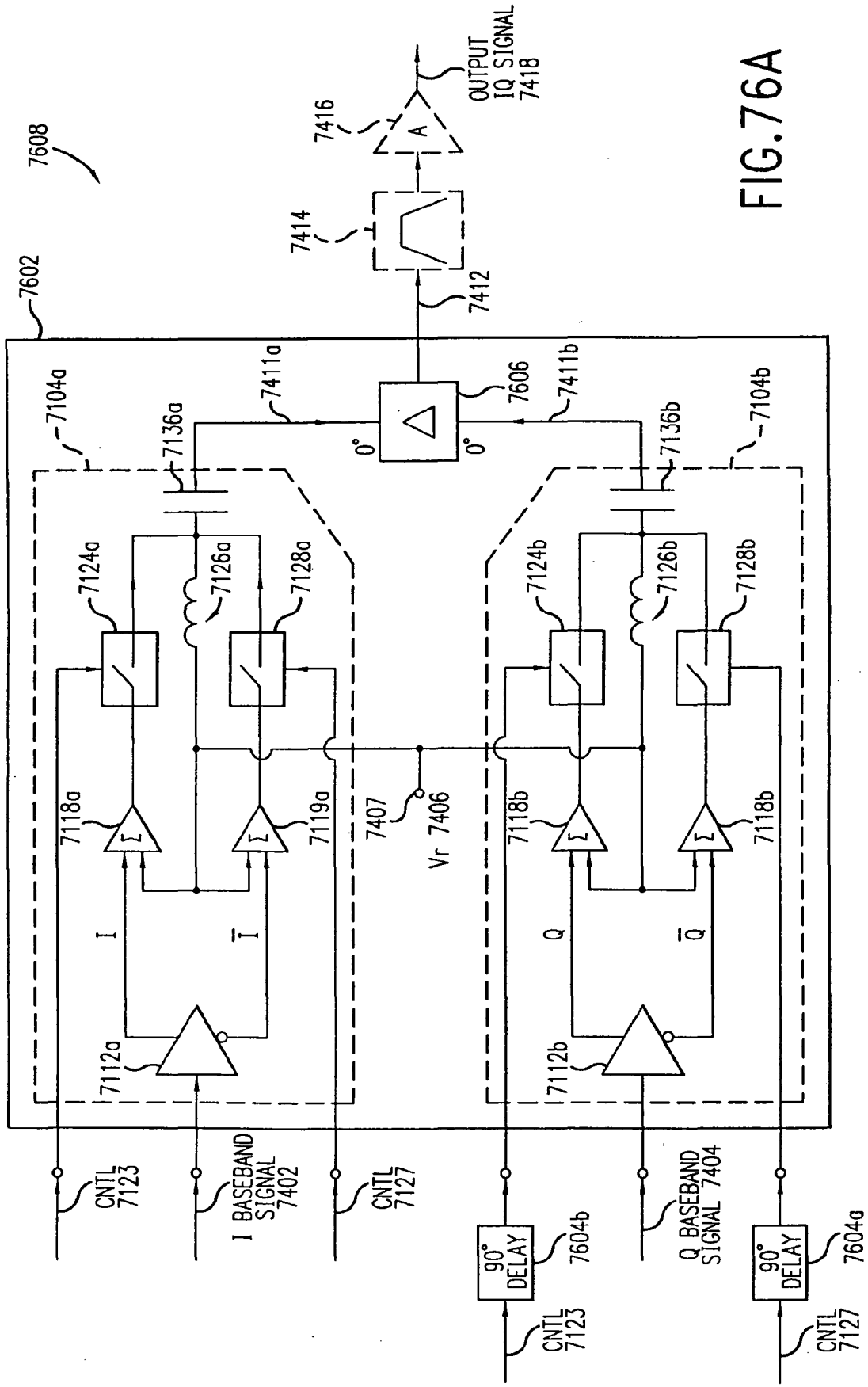
7608
7602
7104a
7104b
7136a
7136b
7411a
7411b
7606
0°
0°
7414
7412
7416
A
OUTPUT IQ SIGNAL 7418
7124a
7126a
7128a
7124b
7126b
7128b
7118a
7119a
7118b
7118b
7407
Vr 7406
I
Ī
Q
Q̄
7112a
7112b
CNTL 7123
I BASEBAND SIGNAL 7402
CNTL 7127
90° DELAY
7604b
Q BASEBAND SIGNAL 7404
90° DELAY
7604a
CNTL 7123
CNTL 7127

FIG. 76A

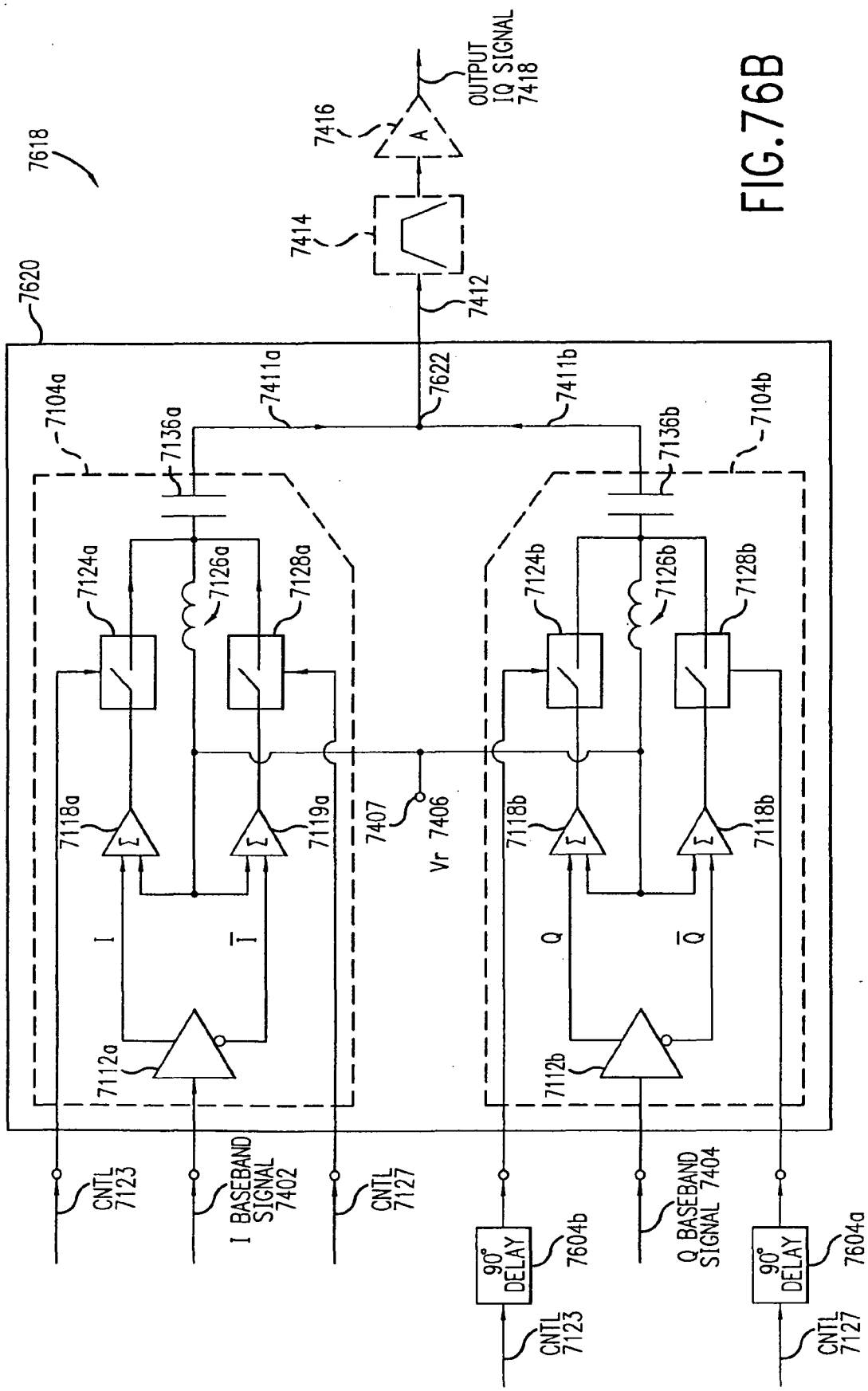
7618
7620
7104a
7104b
7136a
7136b
7411a
7411b
7622
7412
7414
7416
A
OUTPUT IQ SIGNAL 7418
7124a
7126a
7128a
7124b
7126b
7128b
7118a
7119a
7118b
7112a
7112b
I
Ī
Q
Q̄
Σ
7407
Vr 7406
CNTL 7123
I BASEBAND SIGNAL 7402
CNTL 7127
90° DELAY
7604b
Q BASEBAND SIGNAL 7404
7604a

FIG.76B

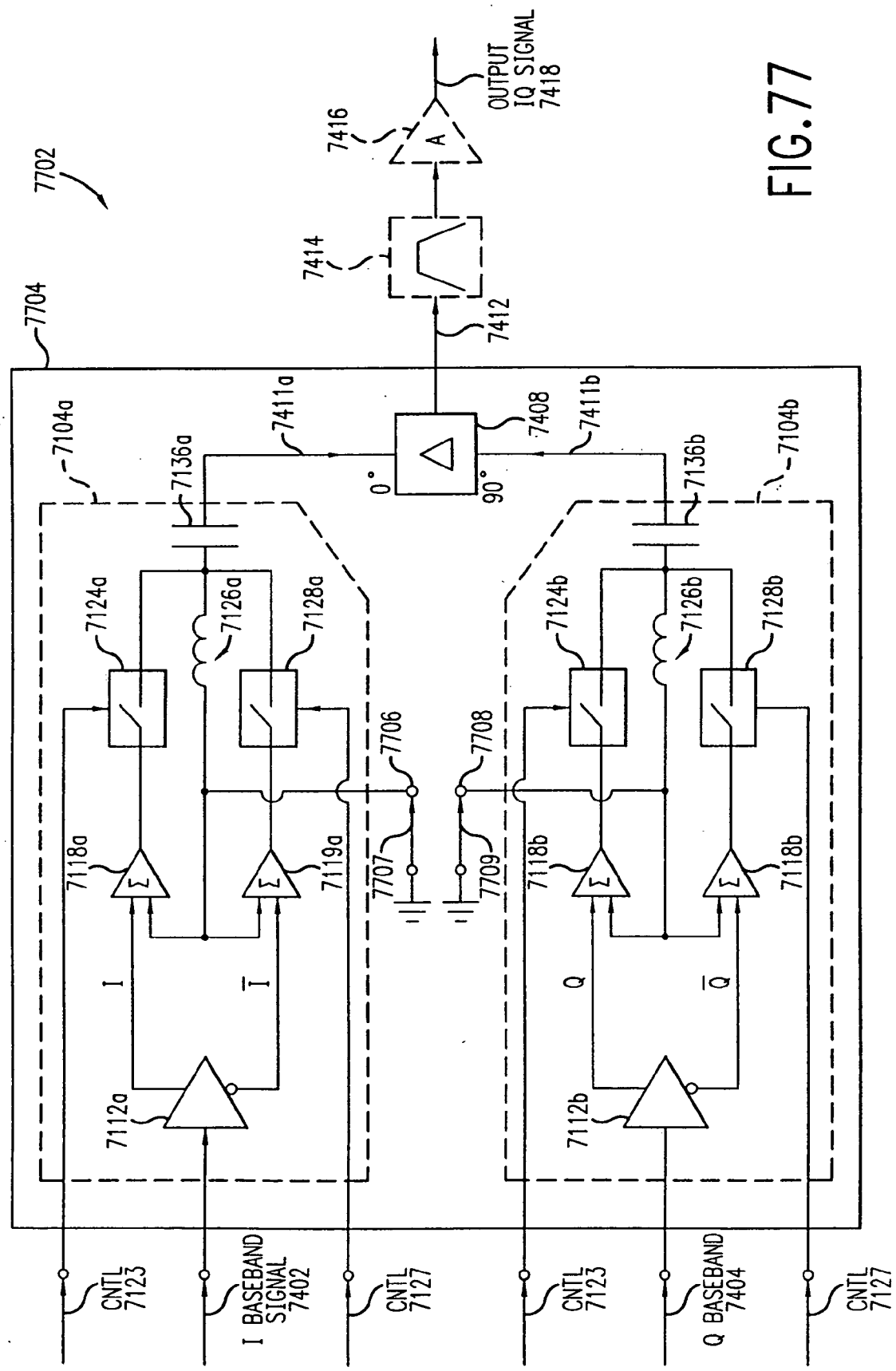
7702
7704
7104a
7104b
7136a
7136b
7411a
7411b
7408
0°
90°
7412
7414
7416
A
OUTPUT IQ SIGNAL 7418
7124a
7126a
7128a
7124b
7126b
7128b
7706
7708
7707
7709
7118a
7119a
7118b
7112a
7112b
I
Ī
Q
Q̄
CNTL 7123
I BASEBAND SIGNAL 7402
CNTL 7127
CNTL 7123
Q BASEBAND 7404
CNTL 7127

FIG. 77

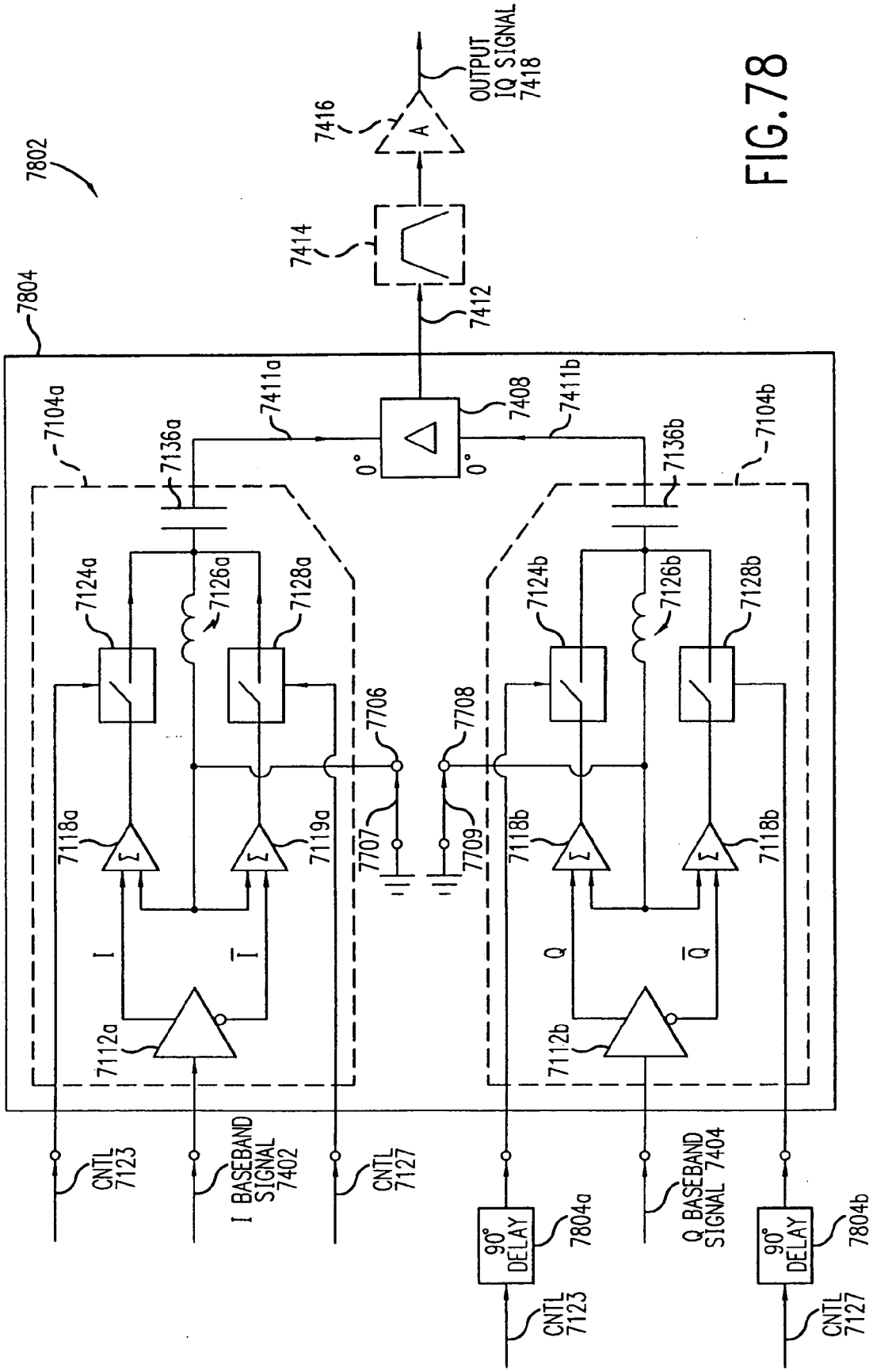
7802
7804
7104a
7104b
7136a
7136b
7411a
7411b
7408
7412
7414
7416
A
OUTPUT IQ SIGNAL 7418
0°
0°
7124a
7126a
7128a
7124b
7126b
7128b
7706
7708
7707
7709
7118a
7119a
7118b
7118b
7112a
7112b
I
Ī
Q
Q̄
CNTL 7123
I BASEBAND SIGNAL 7402
CNTL 7127
90° DELAY
7804a
Q BASEBAND SIGNAL 7404
90° DELAY
7804b
CNTL 7123
CNTL 7127

FIG. 78

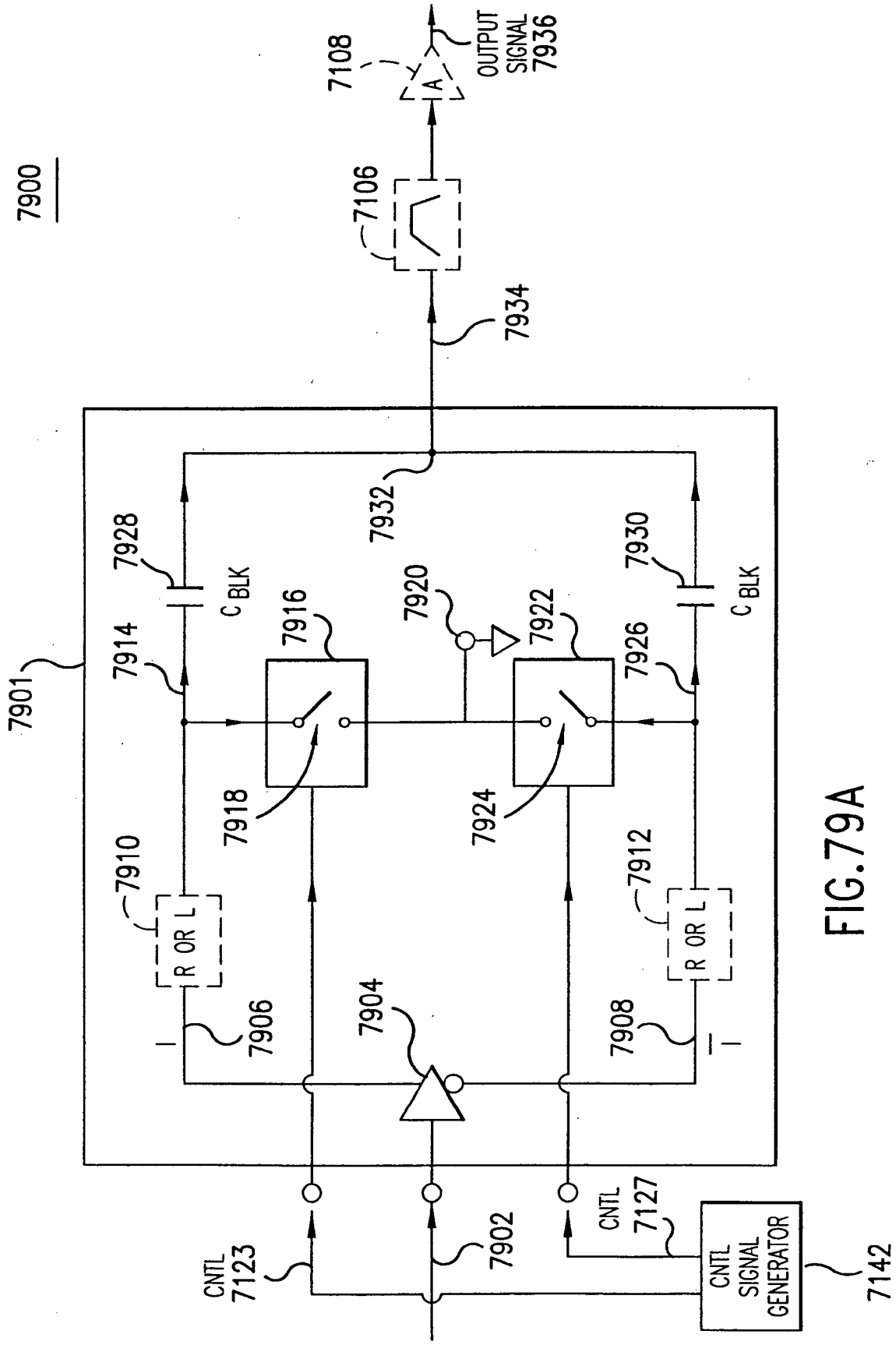
7900
7901
7902
7904
7906
7908
7910
7912
R OR L
R OR L
7914
7916
7918
7920
7922
7924
7926
7928
7930
C BLK
C BLK
7932
7934
7106
7108
A
OUTPUT SIGNAL 7936
CNTL 7123
CNTL 7127
CNTL SIGNAL GENERATOR
7142

FIG. 79A

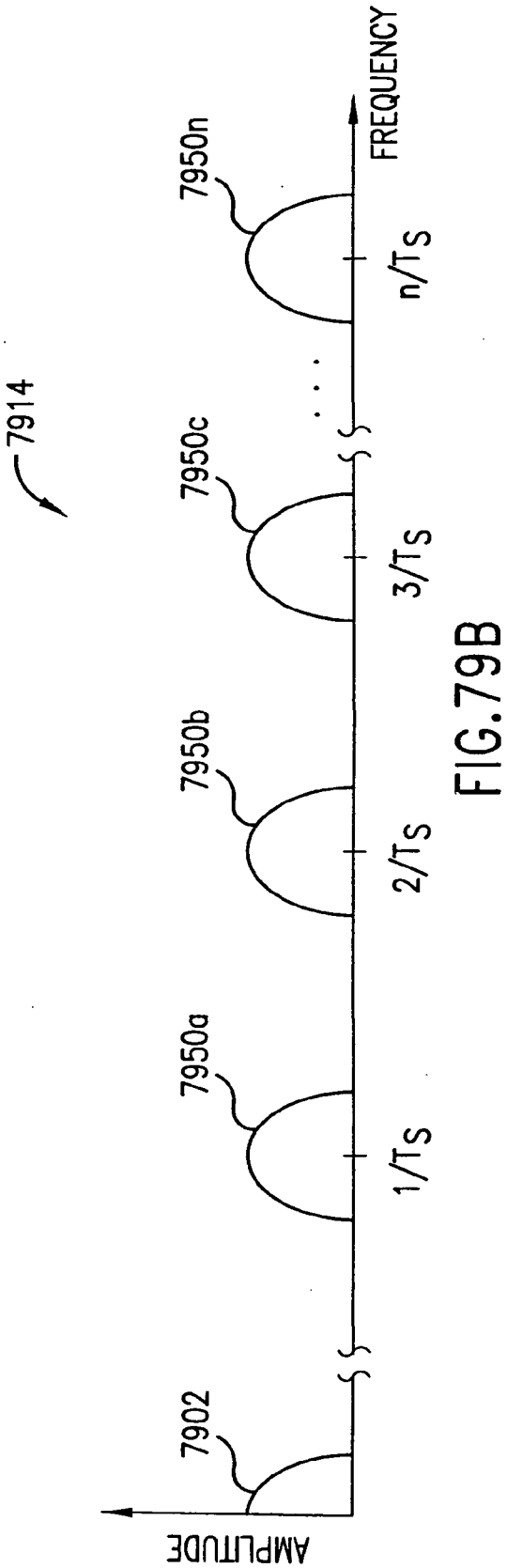

FIG.79B

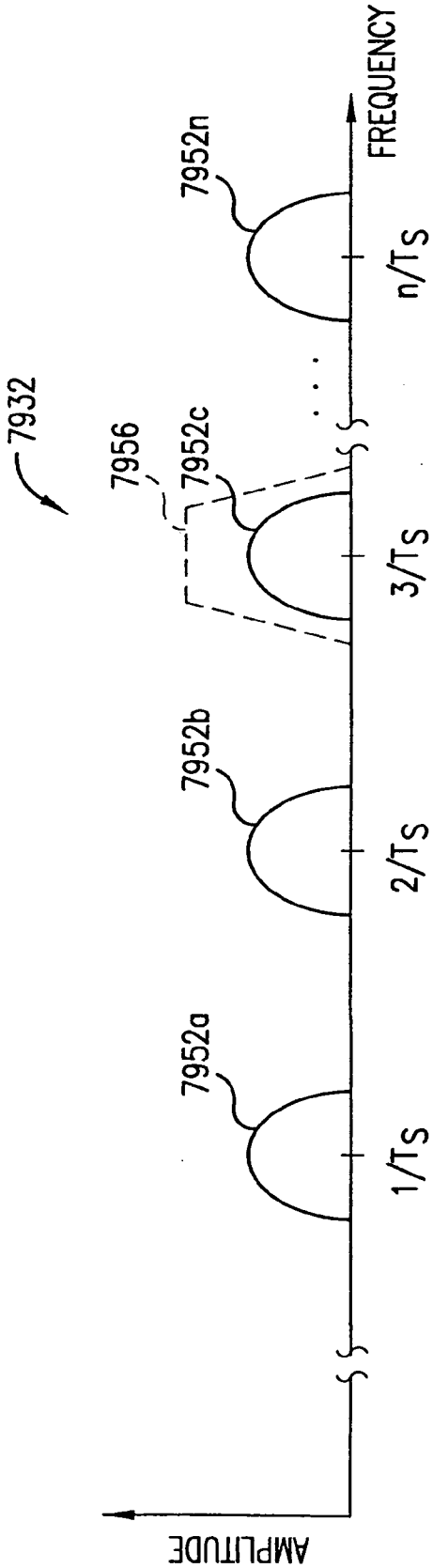

FIG.79C

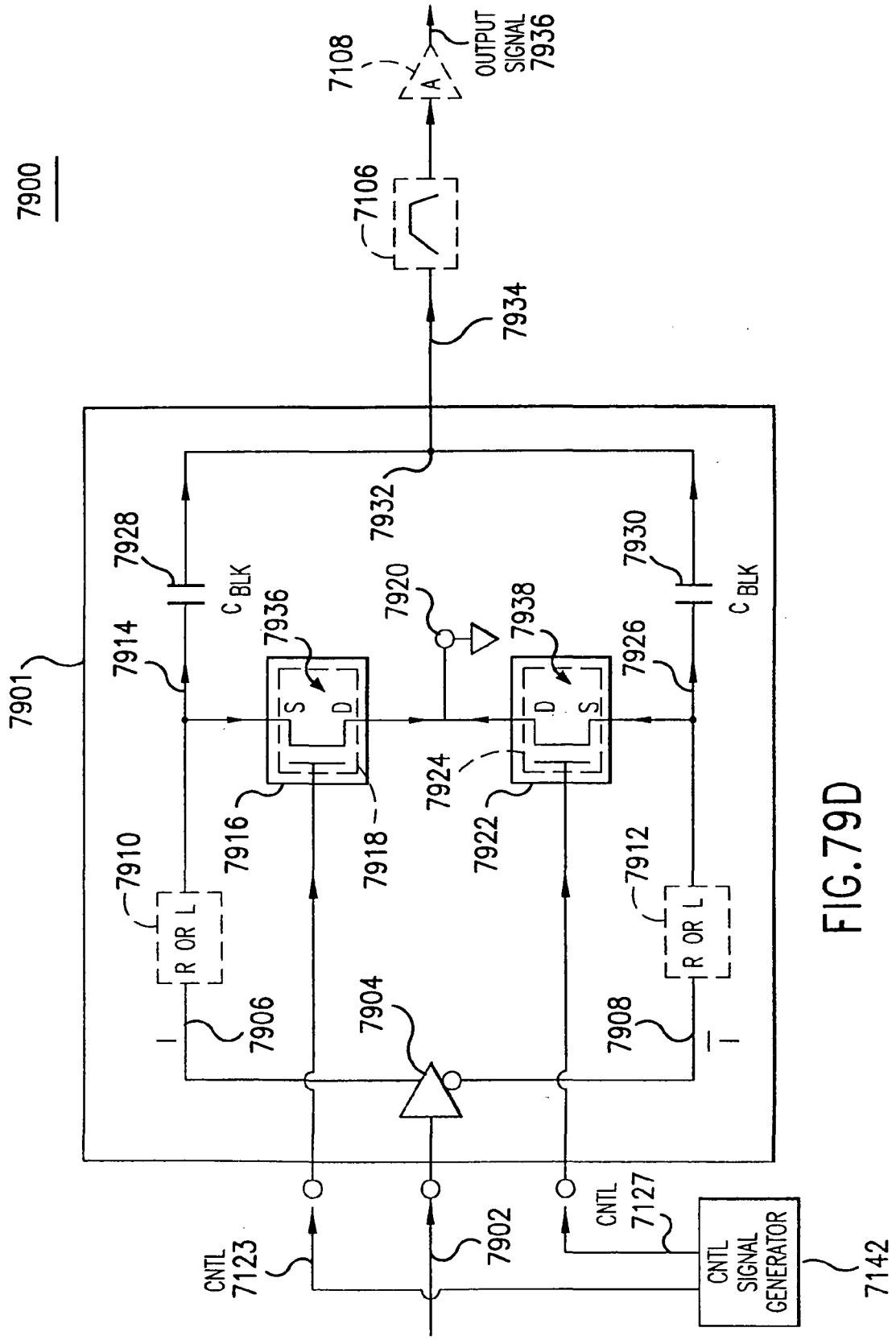
7900
7901
7902
7904
7906
7908
7910
7912
7914
7916
7918
7920
7922
7924
7926
7928
7930
7932
7934
7936
7938
7106
7108
OUTPUT SIGNAL 7936
A
R OR L
R OR L
S
D
D
S
C BLK
C BLK
CNTL 7123
CNTL 7127
CNTL SIGNAL GENERATOR
7142

FIG. 79D

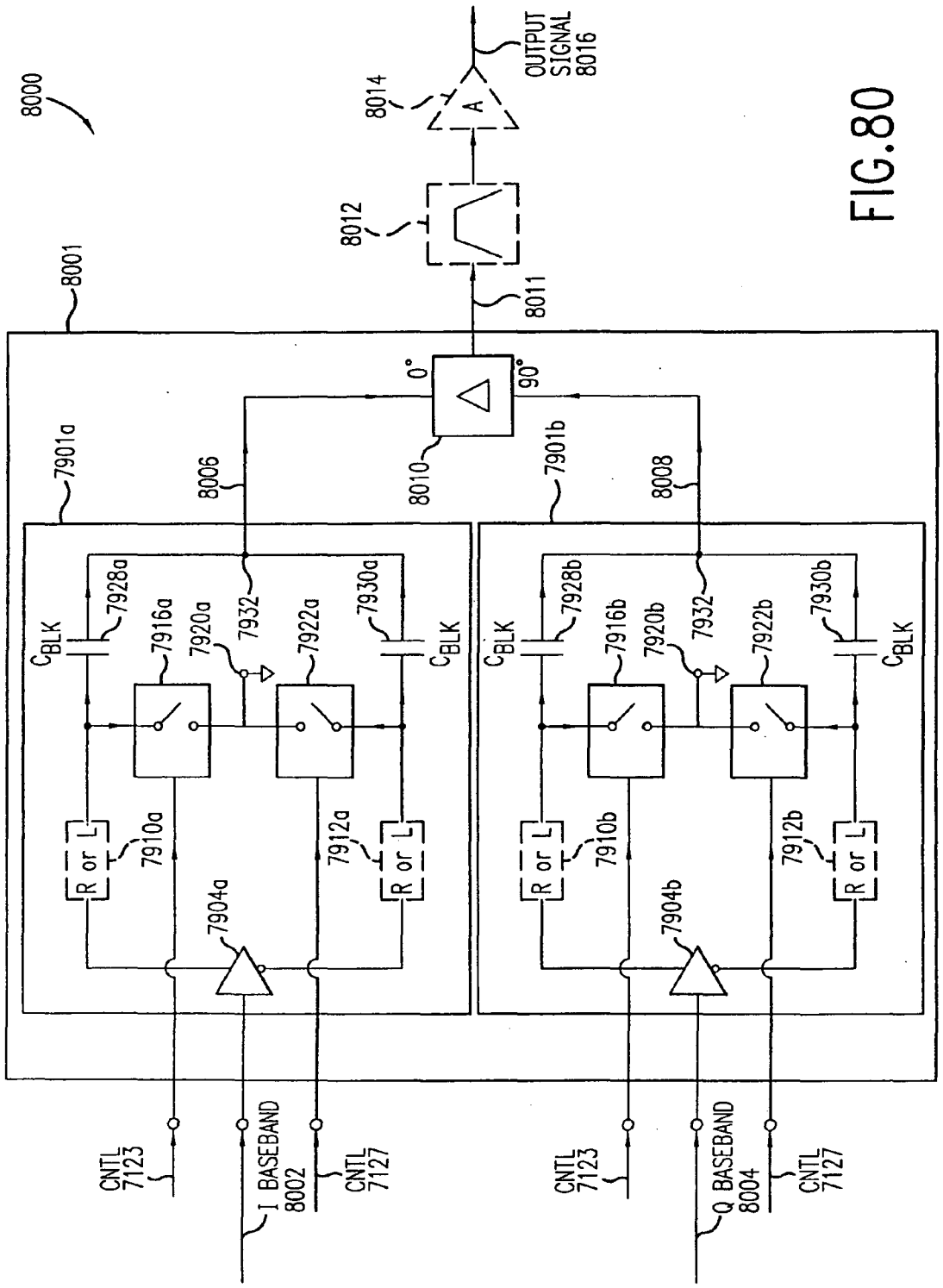
8000
8001
8014
A
OUTPUT SIGNAL 8016
8012
8011
0°
90°
8010
8006
8008
7901a
7901b
C_{BLK}
7928a
7916a
7920a
7932
7922a
7930a
7910a
7912a
R or L
7904a
7928b
7916b
7920b
7922b
7930b
7910b
7912b
7904b
CNTL 7123
I BASEBAND 8002
CNTL 7127
Q BASEBAND 8004

FIG.80

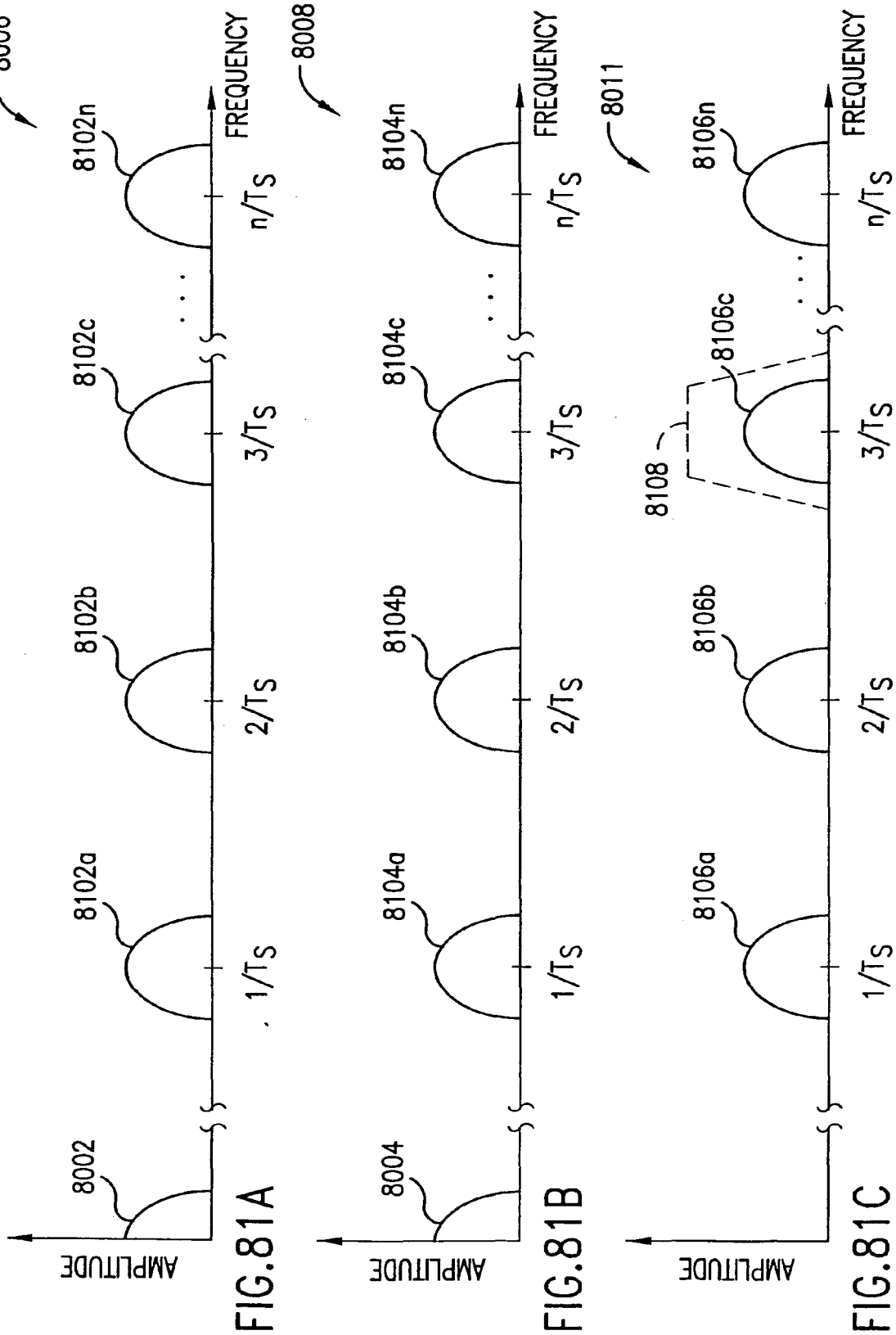

FIG.81A

FIG.81B

FIG.81C

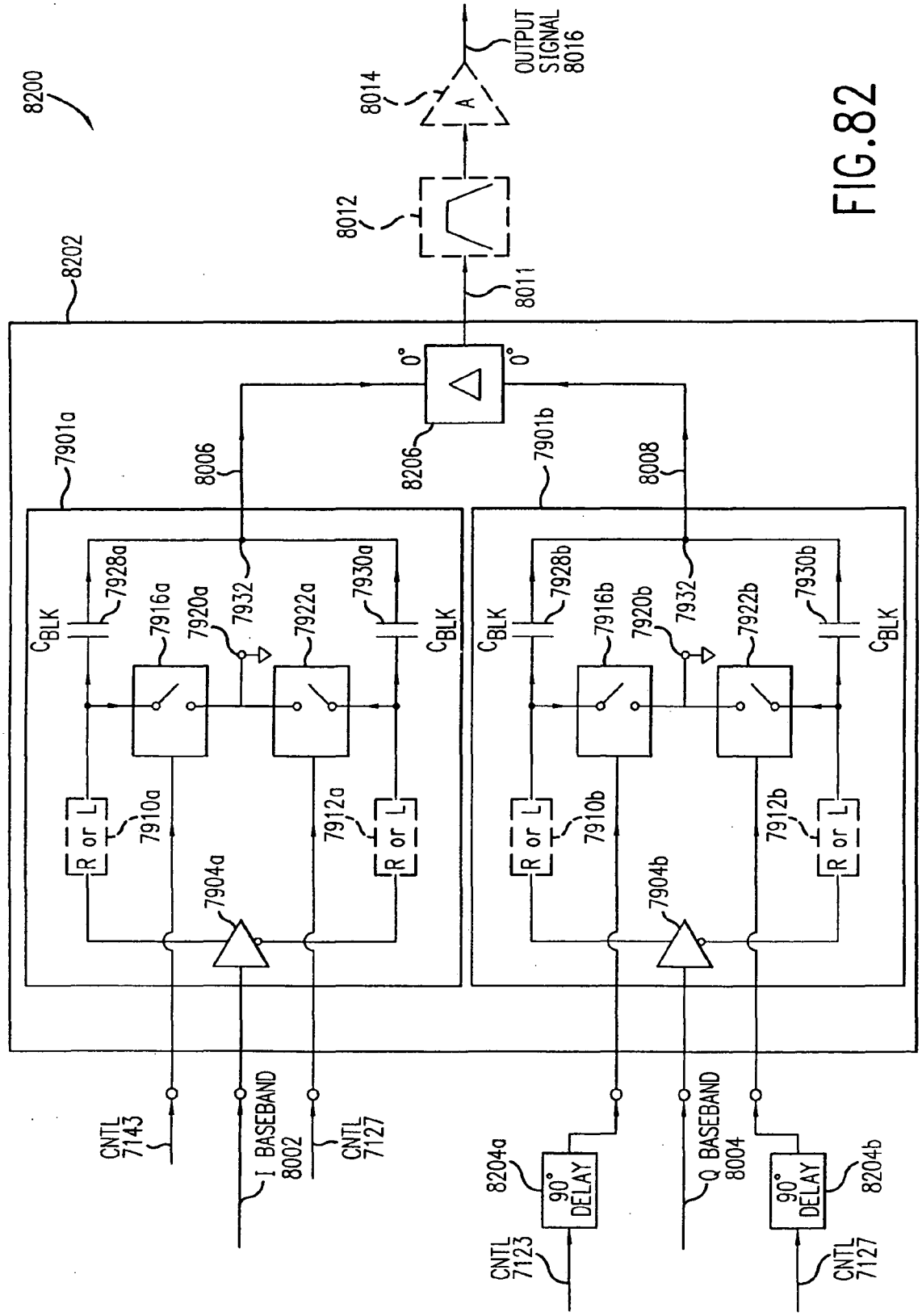
8200
8202
8014
A
OUTPUT SIGNAL 8016
8012
8011
0°
0°
8206
7901a
8006
7901b
8008
C_{BLK}
7928a
7916a
7920a
7932
7922a
7930a
C_{BLK}
C_{BLK}
7928b
7916b
7920b
7932
7922b
7930b
C_{BLK}
R or L
7910a
7912a
R or L
R or L
7910b
7912b
R or L
7904a
7904b
CNTL 7143
I BASEBAND 8002
CNTL 7127
8204a
90° DELAY
CNTL 7123
Q BASEBAND 8004
90° DELAY
8204b
CNTL 7127

FIG.82

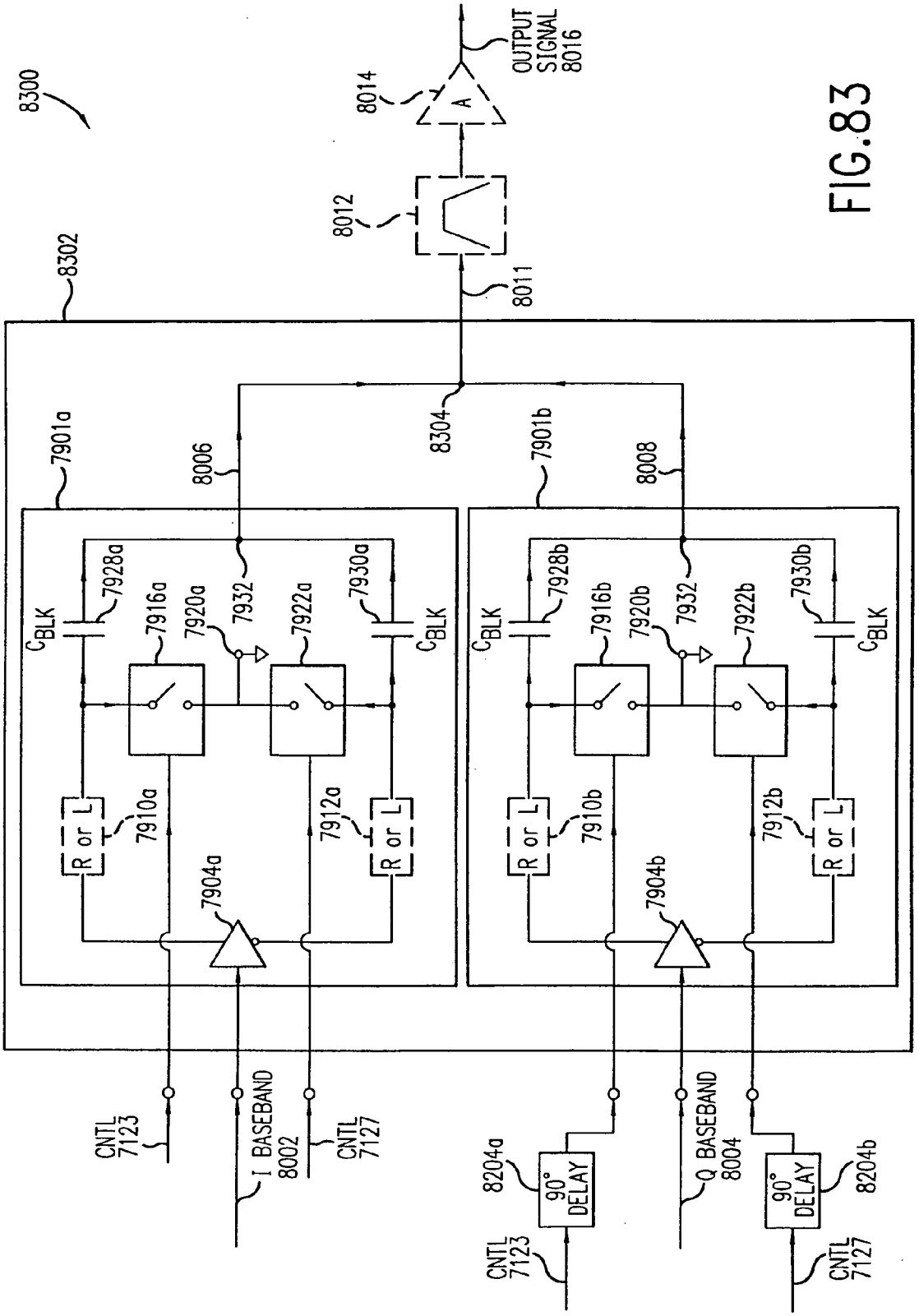
8300
8302
8014
A
OUTPUT SIGNAL 8016
8012
8011
8304
8006
8008
7901a
7901b
7928a
7916a
7920a
7932
7922a
7930a
7910a
7912a
7904a
7928b
7916b
7920b
7922b
7930b
7910b
7912b
7904b
C_{BLK}
R or L
CNTL 7123
I BASEBAND 8002
CNTL 7127
Q BASEBAND 8004
8204a
8204b
90° DELAY

FIG.83

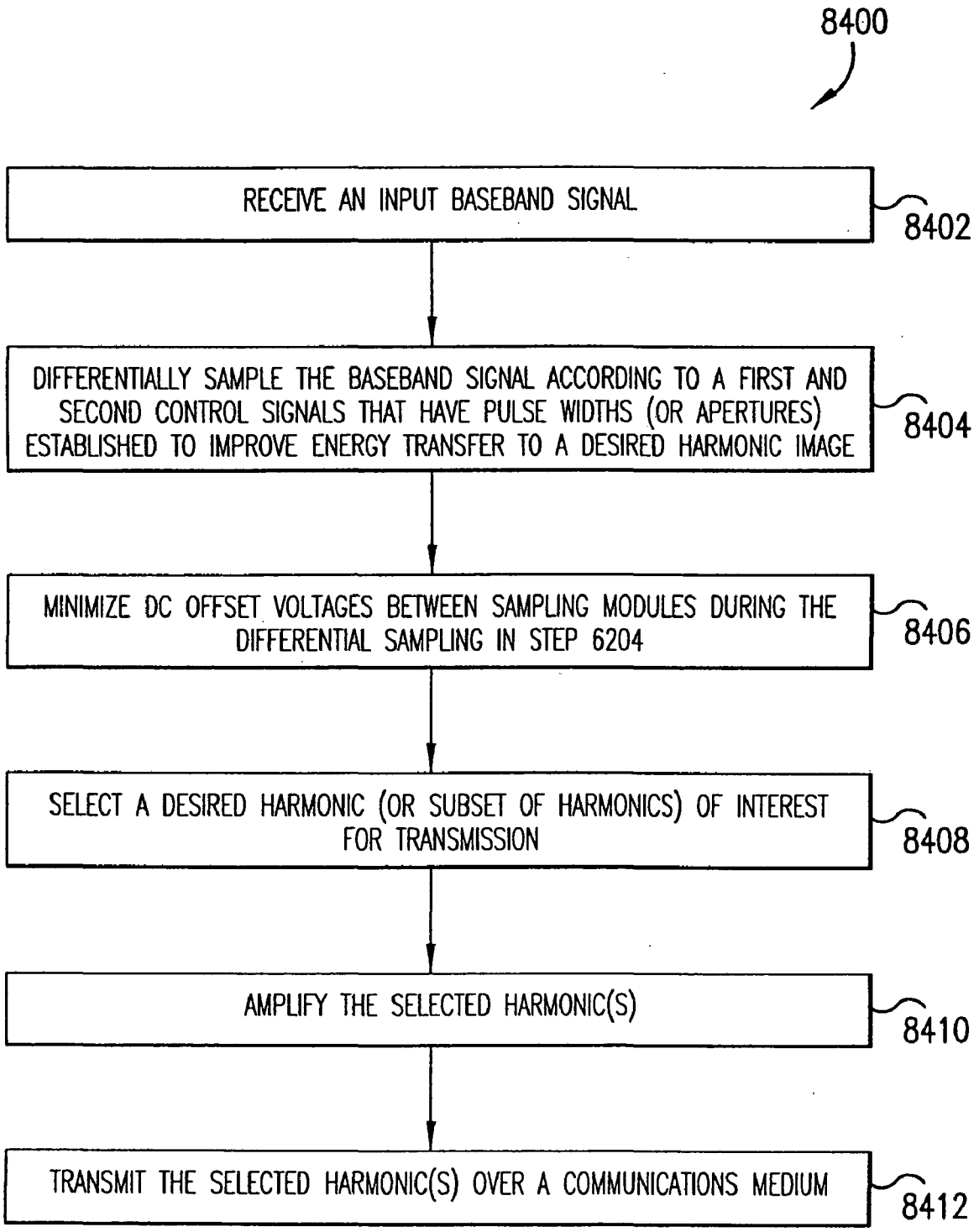
8400
RECEIVE AN INPUT BASEBAND SIGNAL
8402
DIFFERENTIALLY SAMPLE THE BASEBAND SIGNAL ACCORDING TO A FIRST AND SECOND CONTROL SIGNALS THAT HAVE PULSE WIDTHS (OR APERTURES) ESTABLISHED TO IMPROVE ENERGY TRANSFER TO A DESIRED HARMONIC IMAGE
8404
MINIMIZE DC OFFSET VOLTAGES BETWEEN SAMPLING MODULES DURING THE DIFFERENTIAL SAMPLING IN STEP 6204
8406
SELECT A DESIRED HARMONIC (OR SUBSET OF HARMONICS) OF INTEREST FOR TRANSMISSION
8408
AMPLIFY THE SELECTED HARMONIC(S)
8410
TRANSMIT THE SELECTED HARMONIC(S) OVER A COMMUNICATIONS MEDIUM
8412

FIG.84

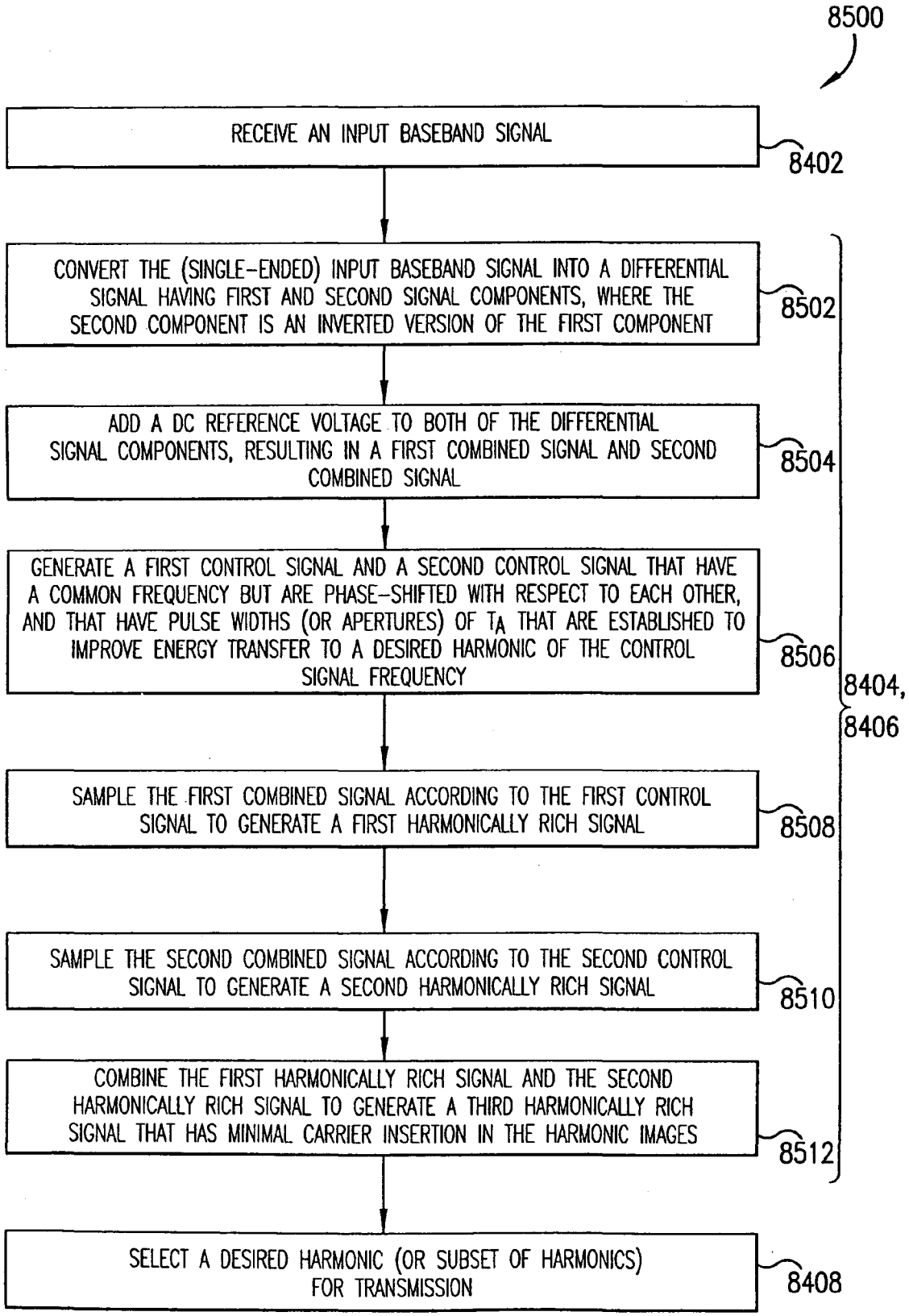
8500
RECEIVE AN INPUT BASEBAND SIGNAL
8402
CONVERT THE (SINGLE-ENDED) INPUT BASEBAND SIGNAL INTO A DIFFERENTIAL SIGNAL HAVING FIRST AND SECOND SIGNAL COMPONENTS, WHERE THE SECOND COMPONENT IS AN INVERTED VERSION OF THE FIRST COMPONENT
8502
ADD A DC REFERENCE VOLTAGE TO BOTH OF THE DIFFERENTIAL SIGNAL COMPONENTS, RESULTING IN A FIRST COMBINED SIGNAL AND SECOND COMBINED SIGNAL
8504
GENERATE A FIRST CONTROL SIGNAL AND A SECOND CONTROL SIGNAL THAT HAVE A COMMON FREQUENCY BUT ARE PHASE-SHIFTED WITH RESPECT TO EACH OTHER, AND THAT HAVE PULSE WIDTHS (OR APERTURES) OF T_A THAT ARE ESTABLISHED TO IMPROVE ENERGY TRANSFER TO A DESIRED HARMONIC OF THE CONTROL SIGNAL FREQUENCY
8506
8404, 8406
SAMPLE THE FIRST COMBINED SIGNAL ACCORDING TO THE FIRST CONTROL SIGNAL TO GENERATE A FIRST HARMONICALLY RICH SIGNAL
8508
SAMPLE THE SECOND COMBINED SIGNAL ACCORDING TO THE SECOND CONTROL SIGNAL TO GENERATE A SECOND HARMONICALLY RICH SIGNAL
8510
COMBINE THE FIRST HARMONICALLY RICH SIGNAL AND THE SECOND HARMONICALLY RICH SIGNAL TO GENERATE A THIRD HARMONICALLY RICH SIGNAL THAT HAS MINIMAL CARRIER INSERTION IN THE HARMONIC IMAGES
8512
SELECT A DESIRED HARMONIC (OR SUBSET OF HARMONICS) FOR TRANSMISSION
8408

FIG.85

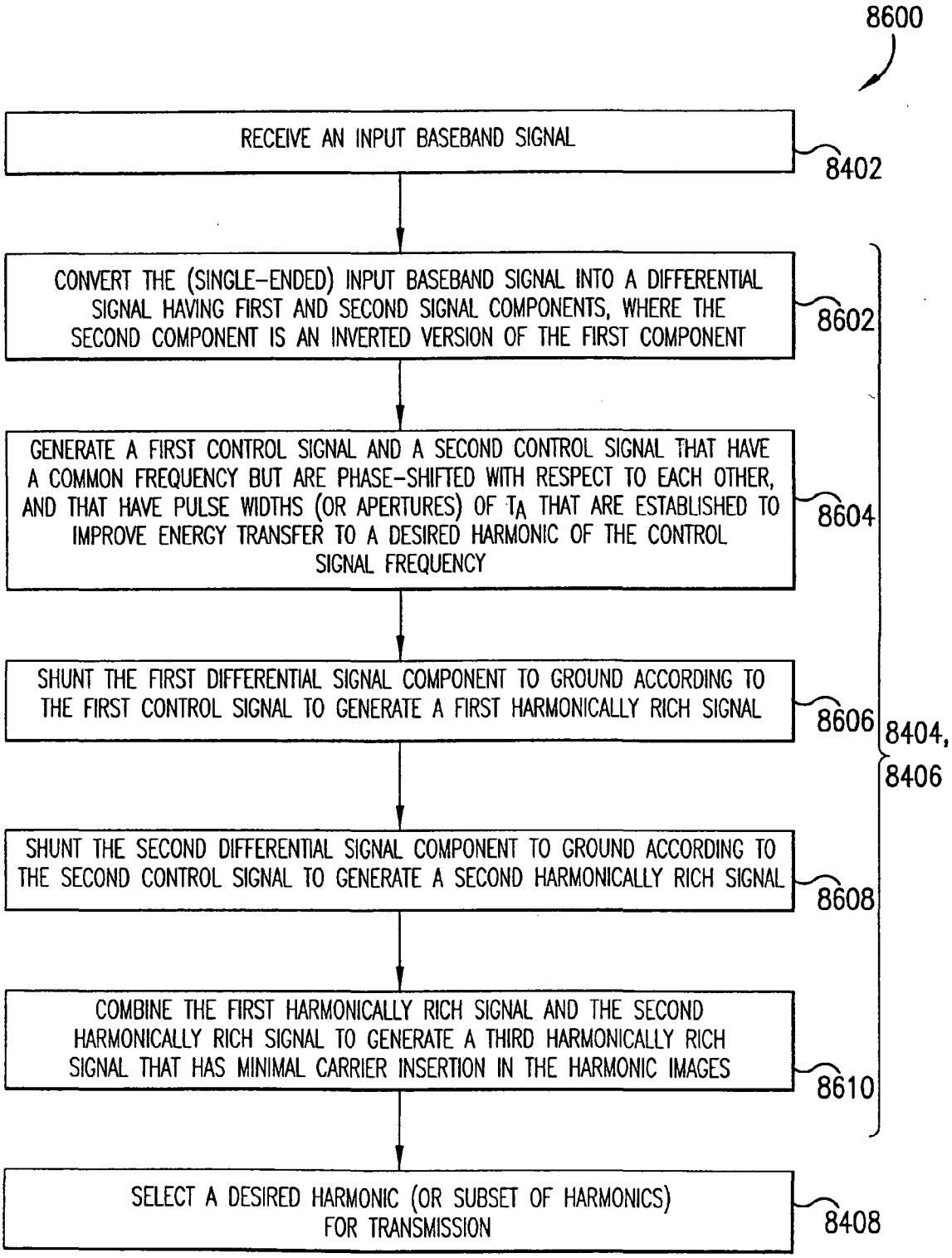
8600
RECEIVE AN INPUT BASEBAND SIGNAL
8402
CONVERT THE (SINGLE-ENDED) INPUT BASEBAND SIGNAL INTO A DIFFERENTIAL SIGNAL HAVING FIRST AND SECOND SIGNAL COMPONENTS, WHERE THE SECOND COMPONENT IS AN INVERTED VERSION OF THE FIRST COMPONENT
8602
GENERATE A FIRST CONTROL SIGNAL AND A SECOND CONTROL SIGNAL THAT HAVE A COMMON FREQUENCY BUT ARE PHASE-SHIFTED WITH RESPECT TO EACH OTHER, AND THAT HAVE PULSE WIDTHS (OR APERTURES) OF T_A THAT ARE ESTABLISHED TO IMPROVE ENERGY TRANSFER TO A DESIRED HARMONIC OF THE CONTROL SIGNAL FREQUENCY
8604
SHUNT THE FIRST DIFFERENTIAL SIGNAL COMPONENT TO GROUND ACCORDING TO THE FIRST CONTROL SIGNAL TO GENERATE A FIRST HARMONICALLY RICH SIGNAL
8606
8404, 8406
SHUNT THE SECOND DIFFERENTIAL SIGNAL COMPONENT TO GROUND ACCORDING TO THE SECOND CONTROL SIGNAL TO GENERATE A SECOND HARMONICALLY RICH SIGNAL
8608
COMBINE THE FIRST HARMONICALLY RICH SIGNAL AND THE SECOND HARMONICALLY RICH SIGNAL TO GENERATE A THIRD HARMONICALLY RICH SIGNAL THAT HAS MINIMAL CARRIER INSERTION IN THE HARMONIC IMAGES
8610
SELECT A DESIRED HARMONIC (OR SUBSET OF HARMONICS) FOR TRANSMISSION
8408

FIG.86

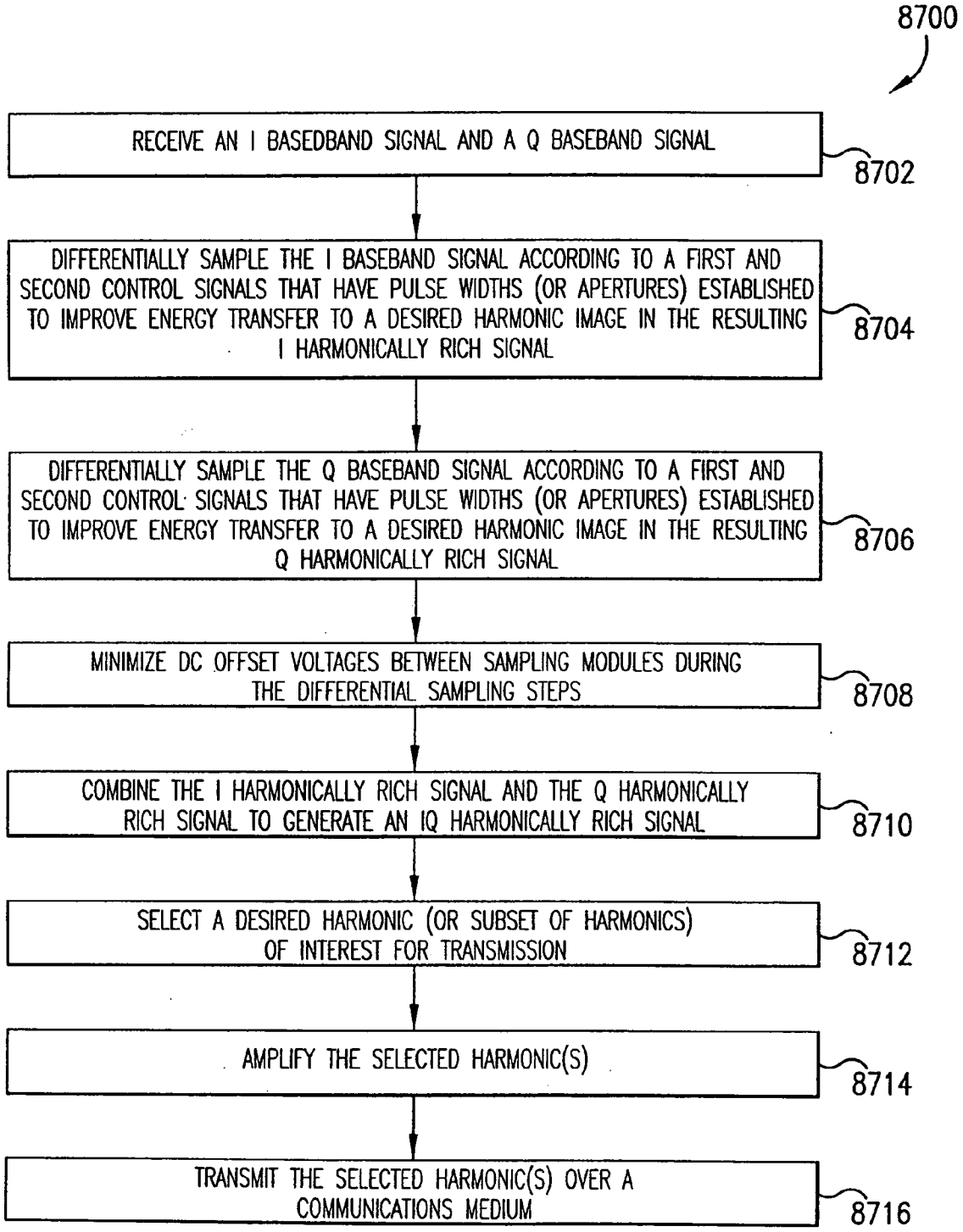
8700
RECEIVE AN I BASEDBAND SIGNAL AND A Q BASEBAND SIGNAL
8702
DIFFERENTIALLY SAMPLE THE I BASEBAND SIGNAL ACCORDING TO A FIRST AND SECOND CONTROL SIGNALS THAT HAVE PULSE WIDTHS (OR APERTURES) ESTABLISHED TO IMPROVE ENERGY TRANSFER TO A DESIRED HARMONIC IMAGE IN THE RESULTING I HARMONICALLY RICH SIGNAL
8704
DIFFERENTIALLY SAMPLE THE Q BASEBAND SIGNAL ACCORDING TO A FIRST AND SECOND CONTROL SIGNALS THAT HAVE PULSE WIDTHS (OR APERTURES) ESTABLISHED TO IMPROVE ENERGY TRANSFER TO A DESIRED HARMONIC IMAGE IN THE RESULTING Q HARMONICALLY RICH SIGNAL
8706
MINIMIZE DC OFFSET VOLTAGES BETWEEN SAMPLING MODULES DURING THE DIFFERENTIAL SAMPLING STEPS
8708
COMBINE THE I HARMONICALLY RICH SIGNAL AND THE Q HARMONICALLY RICH SIGNAL TO GENERATE AN IQ HARMONICALLY RICH SIGNAL
8710
SELECT A DESIRED HARMONIC (OR SUBSET OF HARMONICS) OF INTEREST FOR TRANSMISSION
8712
AMPLIFY THE SELECTED HARMONIC(S)
8714
TRANSMIT THE SELECTED HARMONIC(S) OVER A COMMUNICATIONS MEDIUM
8716

FIG.87

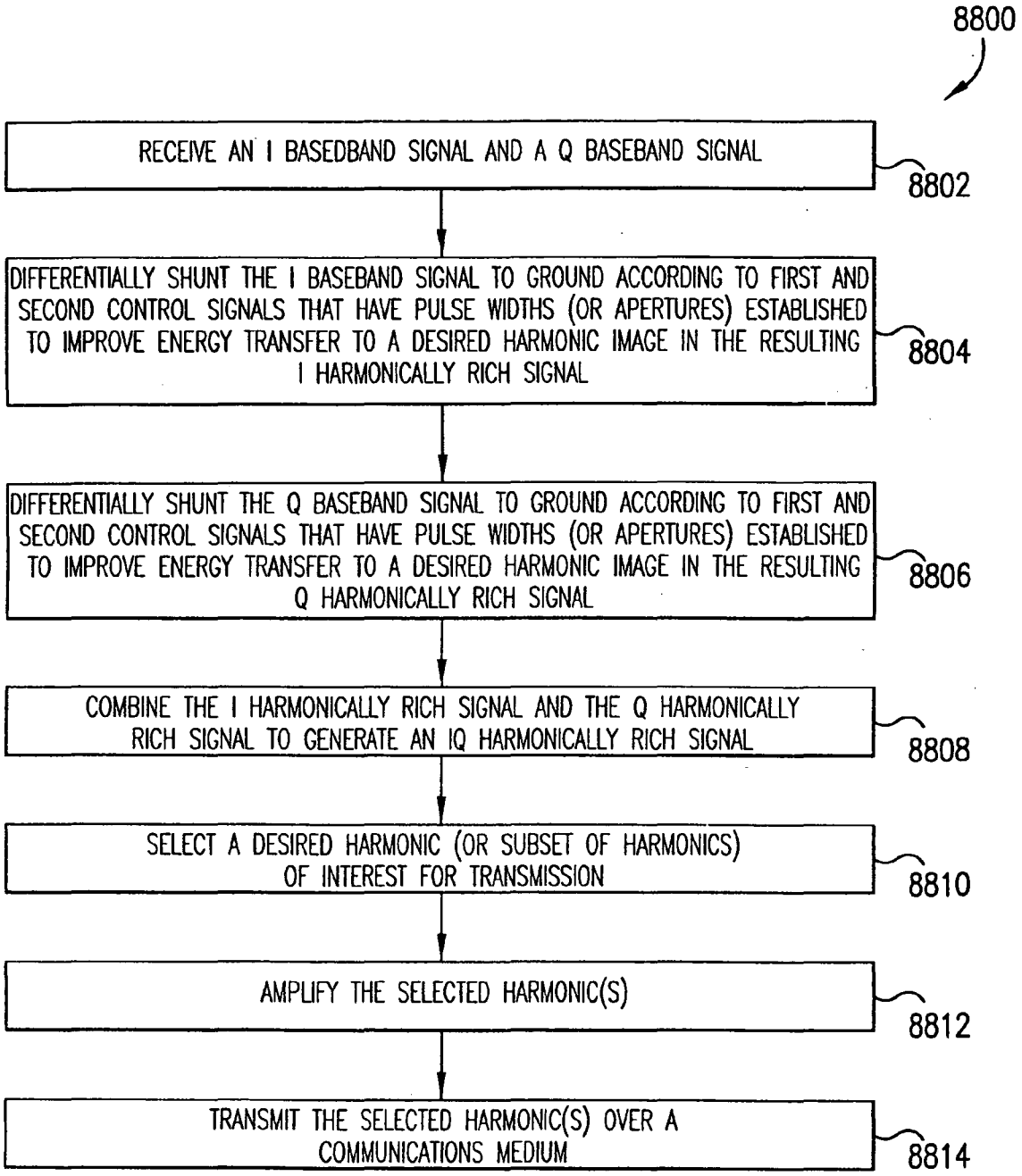
8800
RECEIVE AN I BASEDBAND SIGNAL AND A Q BASEBAND SIGNAL
8802
DIFFERENTIALLY SHUNT THE I BASEBAND SIGNAL TO GROUND ACCORDING TO FIRST AND SECOND CONTROL SIGNALS THAT HAVE PULSE WIDTHS (OR APERTURES) ESTABLISHED TO IMPROVE ENERGY TRANSFER TO A DESIRED HARMONIC IMAGE IN THE RESULTING I HARMONICALLY RICH SIGNAL
8804
DIFFERENTIALLY SHUNT THE Q BASEBAND SIGNAL TO GROUND ACCORDING TO FIRST AND SECOND CONTROL SIGNALS THAT HAVE PULSE WIDTHS (OR APERTURES) ESTABLISHED TO IMPROVE ENERGY TRANSFER TO A DESIRED HARMONIC IMAGE IN THE RESULTING Q HARMONICALLY RICH SIGNAL
8806
COMBINE THE I HARMONICALLY RICH SIGNAL AND THE Q HARMONICALLY RICH SIGNAL TO GENERATE AN IQ HARMONICALLY RICH SIGNAL
8808
SELECT A DESIRED HARMONIC (OR SUBSET OF HARMONICS) OF INTEREST FOR TRANSMISSION
8810
AMPLIFY THE SELECTED HARMONIC(S)
8812
TRANSMIT THE SELECTED HARMONIC(S) OVER A COMMUNICATIONS MEDIUM
8814

FIG.88

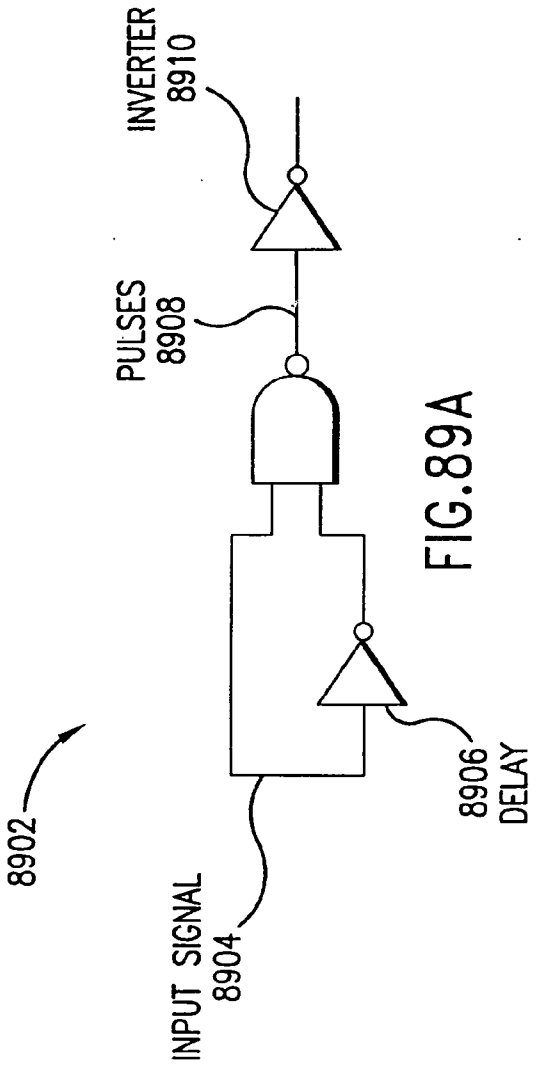

FIG.89A

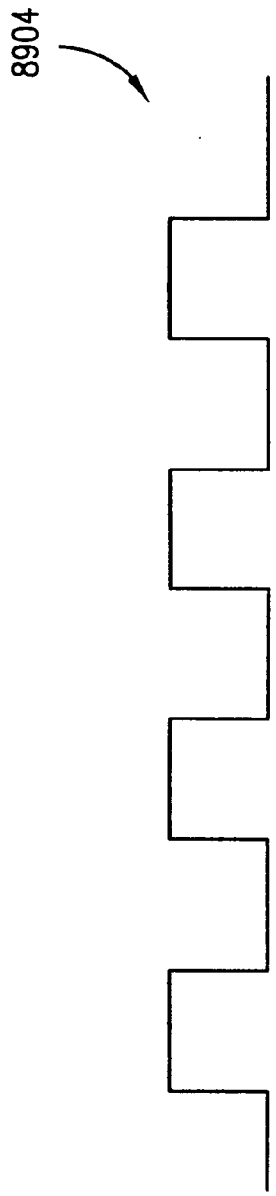

FIG.89B

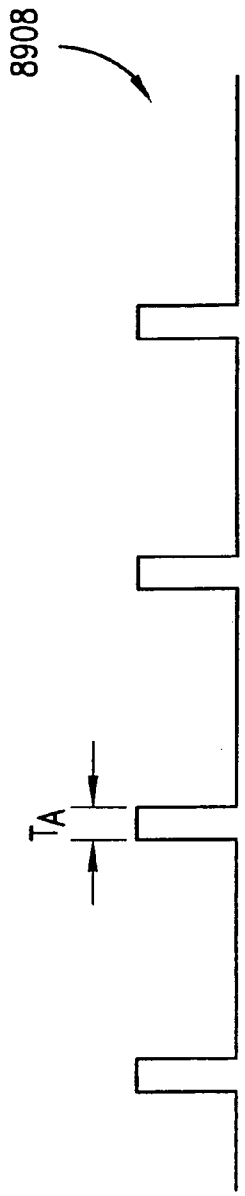

FIG.89C

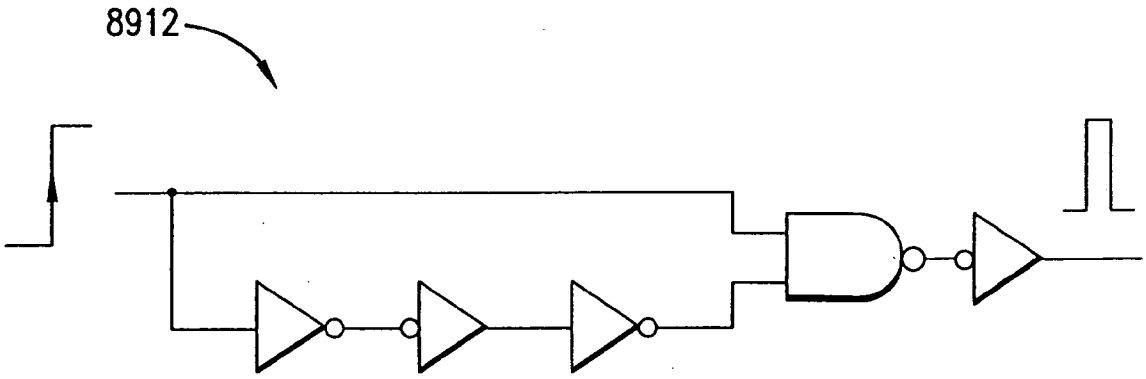

RISING EDGE PULSE GENERATOR

FIG.89D

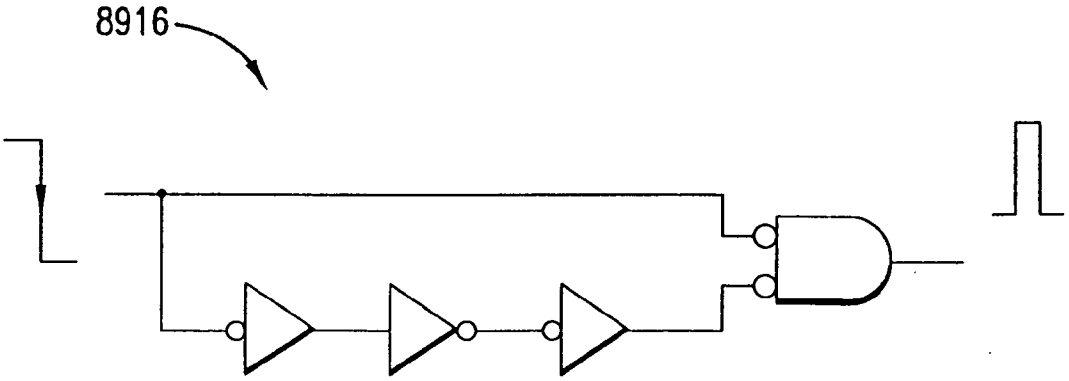

FALLING EDGE PULSE GENERATOR

FIG.89E

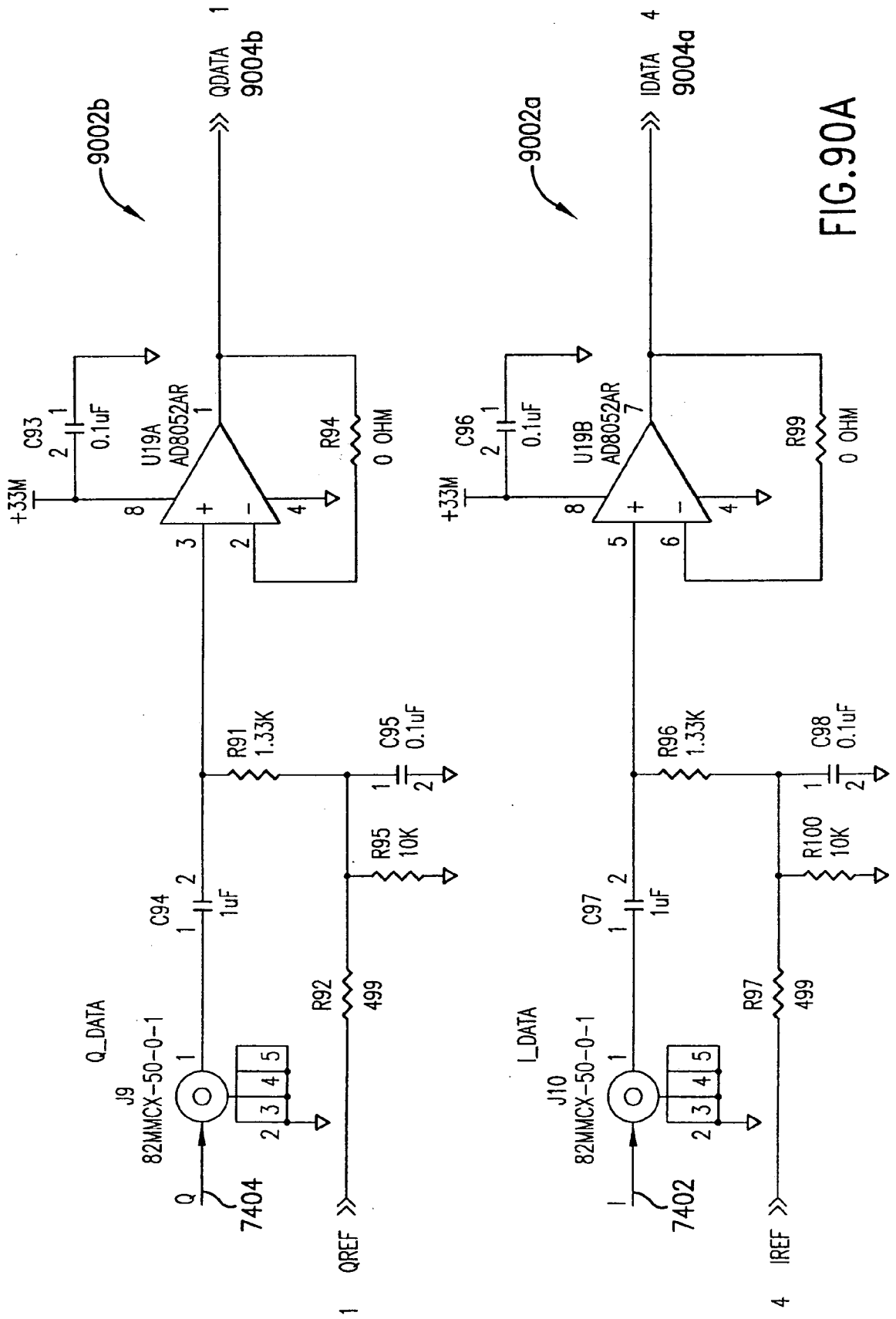
9002b
QDATA
9004b
+33M
C93
0.1uF
U19A
AD8052AR
R94
0 OHM
R91
1.33K
C95
0.1uF
R95
10K
C94
1uF
Q_DATA
J9
82MMCX-50-0-1
Q
7404
R92
499
QREF
9002a
IDATA
9004a
C96
0.1uF
U19B
AD8052AR
R99
0 OHM
R96
1.33K
C98
0.1uF
R100
10K
C97
1uF
I_DATA
J10
82MMCX-50-0-1
I
7402
R97
499
IREF

FIG.90A

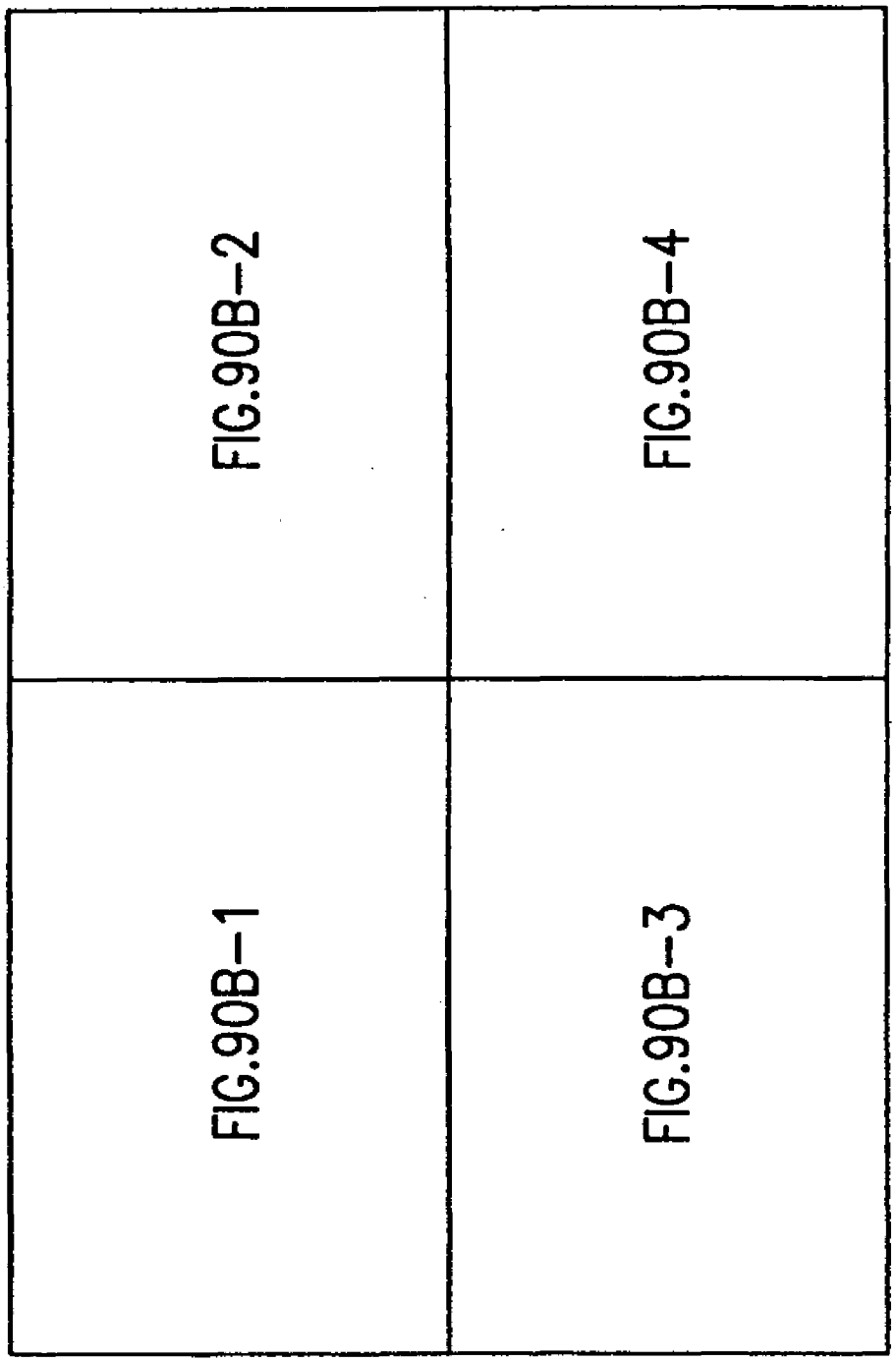

FIG.90B

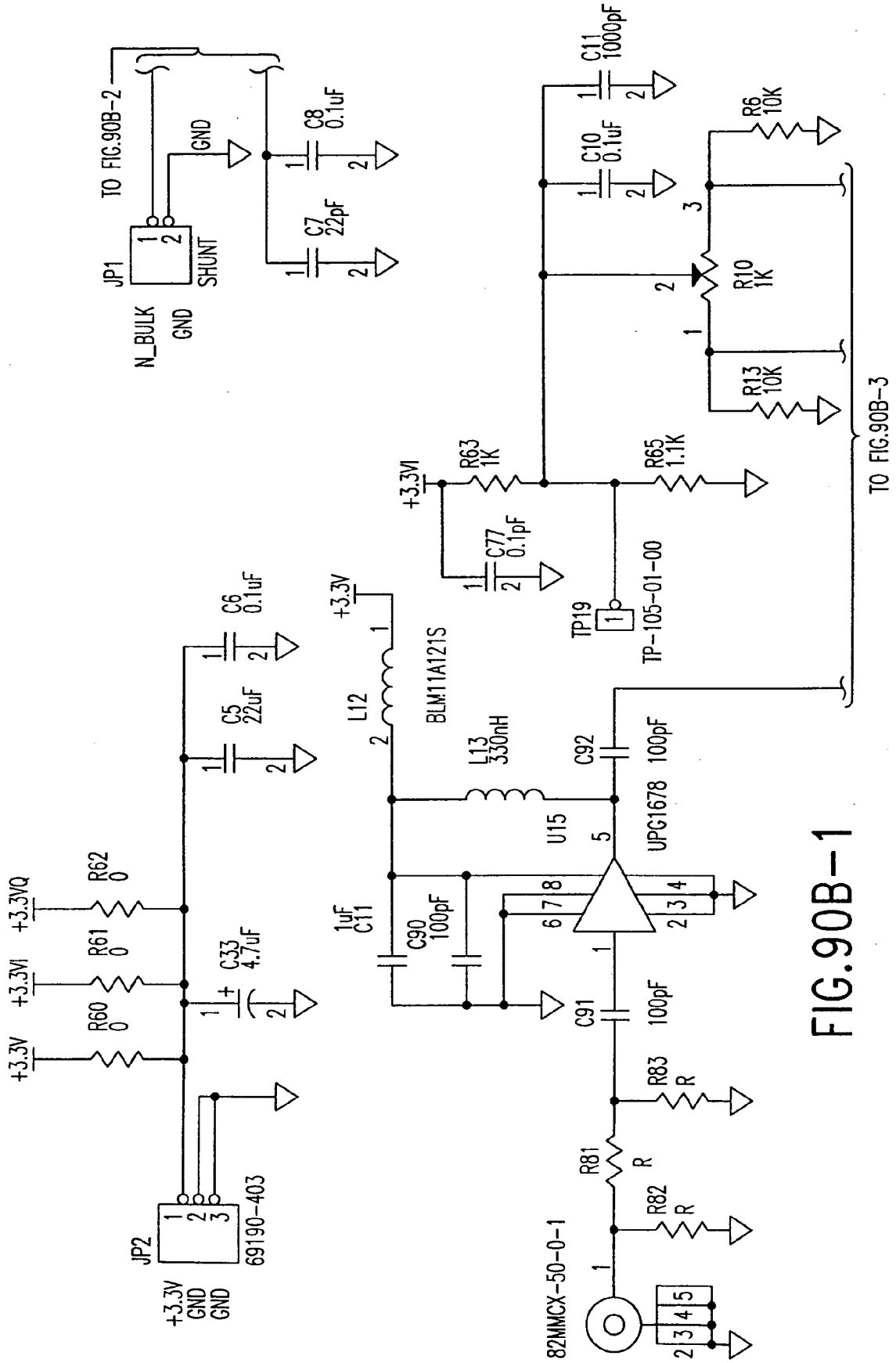
TO FIG.90B-2
JP1
SHUNT
GND
N_BULK
GND
C8 0.1uF
C7 22pF
C11 1000pF
C10 0.1uF
R6 10K
R10 1K
R13 10K
TO FIG.90B-3
+3.3VI
R63 1K
R65 1.1K
C77 0.1pF
TP19
TP-105-01-00
+3.3V
L12
BLM11A121S
L13 330nH
C92 100pF
U15
UPG1678
C6 0.1uF
C5 22uF
+3.3VQ
R62 0
+3.3VI
R61 0
+3.3V
R60 0
C33 4.7uF
1uF C11
C90 100pF
C91 100pF
R83 R
R81 R
R82 R
JP2
69190-403
+3.3V
GND
GND
82MMCX-50-0-1

FIG.90B-1

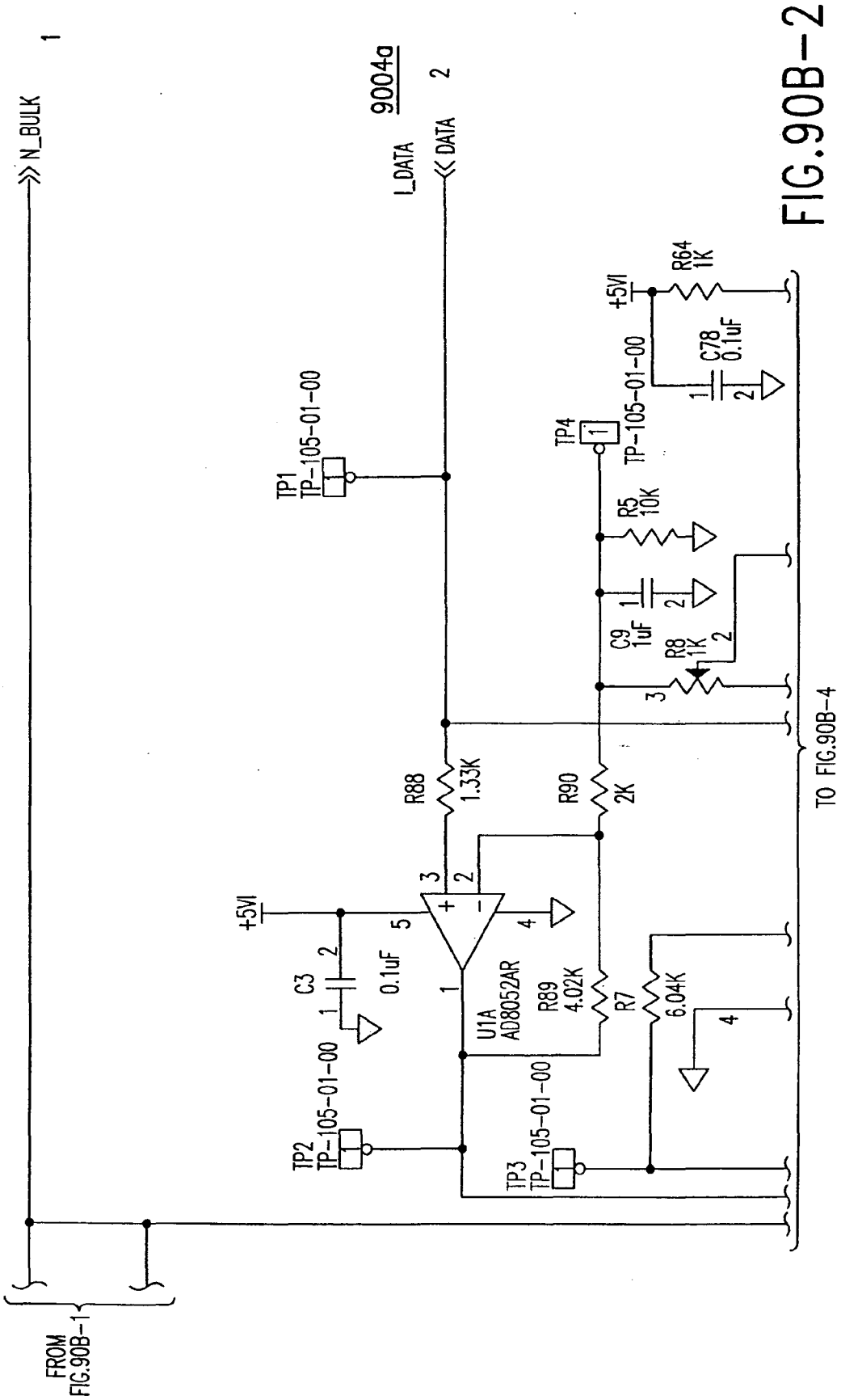
N_BULK
1
9004a
2
L_DATA
DATA
TP1
TP-105-01-00
TP2
TP-105-01-00
TP3
TP-105-01-00
TP4
TP-105-01-00
+5VI
C3
0.1uF
R88
1.33K
R90
2K
U1A
AD8052AR
R89
4.02K
R7
6.04K
R5
10K
C9
1uF
R8
1K
R64
1K
C78
0.1uF
FROM
FIG.90B-1
TO FIG.90B-4

FIG.90B-2

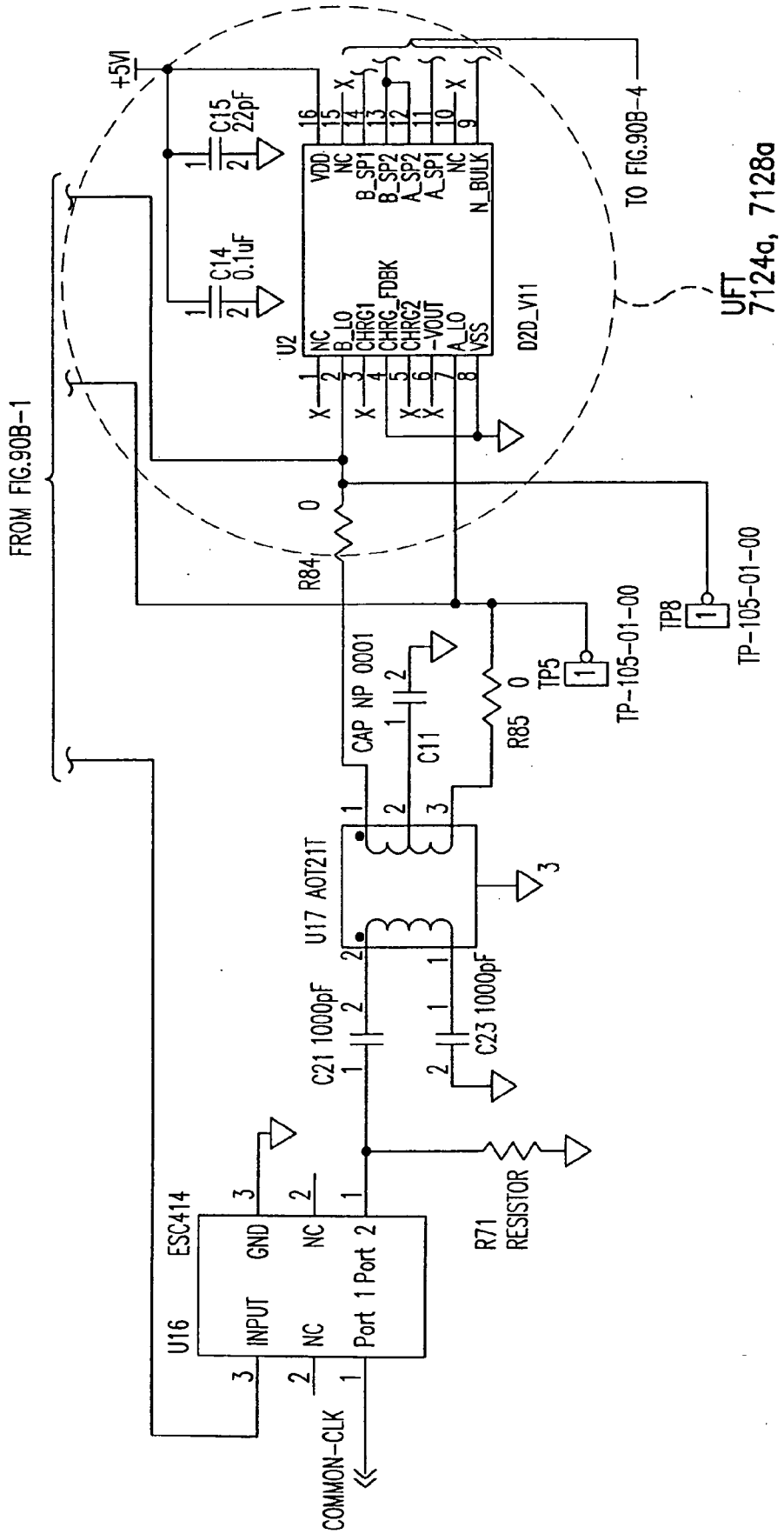
FROM FIG.90B-1
+5V
C15
22pF
C14
0.1uF
U2
NC
B_LO
CHRG1
CHRG_FDBK
CHRG2
-VOUT
A_LO
VSS
VDD
NC
B_SP1
B_SP2
A_SP2
A_SP1
NC
N_BULK
D2D_V11
TO FIG.90B-4
UFT
7124a, 7128a
R84
0
TP8
TP-105-01-00
TP5
TP-105-01-00
CAP NP 0001
C11
R85
0
U17 AOT21T
C21 1000pF
C23 1000pF
R71
RESISTOR
U16
ESC414
INPUT
GND
NC
NC
Port 1 Port 2
COMMON-CLK

FIG.90B-3

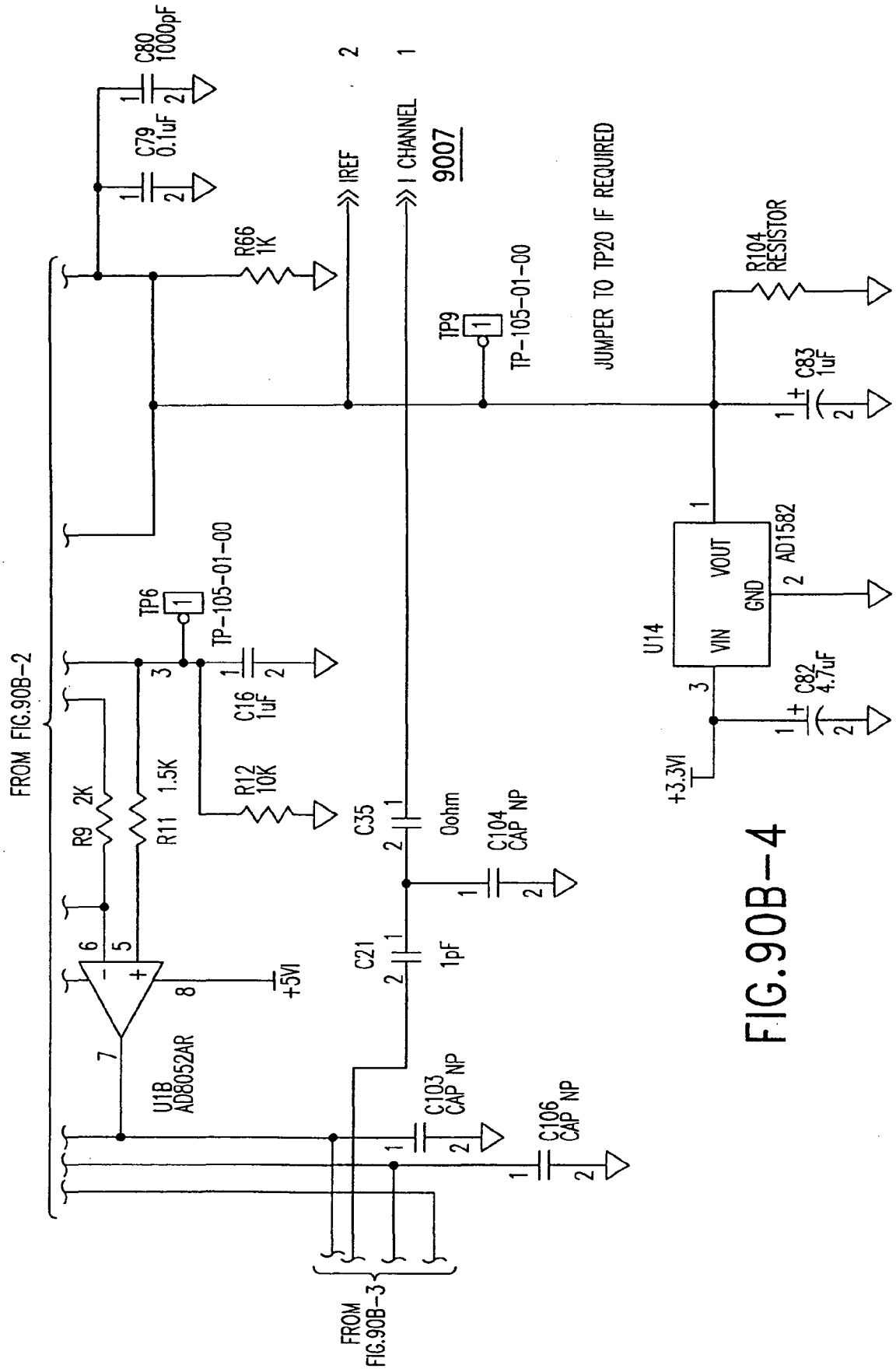
FROM FIG.90B-2
C80 1000pF
C79 0.1uF
R66 1K
IREF
I CHANNEL
9007
TP9
TP-105-01-00
JUMPER TO TP20 IF REQUIRED
R104 RESISTOR
C83 1uF
U14
VIN
VOUT
GND
AD1582
C82 4.7uF
+3.3VI
TP6
TP-105-01-00
C16 1uF
R12 10K
R9 2K
R11 1.5K
U1B AD8052AR
+5VI
C35 0ohm
C104 CAP NP
C21 1pF
C103 CAP NP
C106 CAP NP
FROM FIG.90B-3

FIG.90B-4

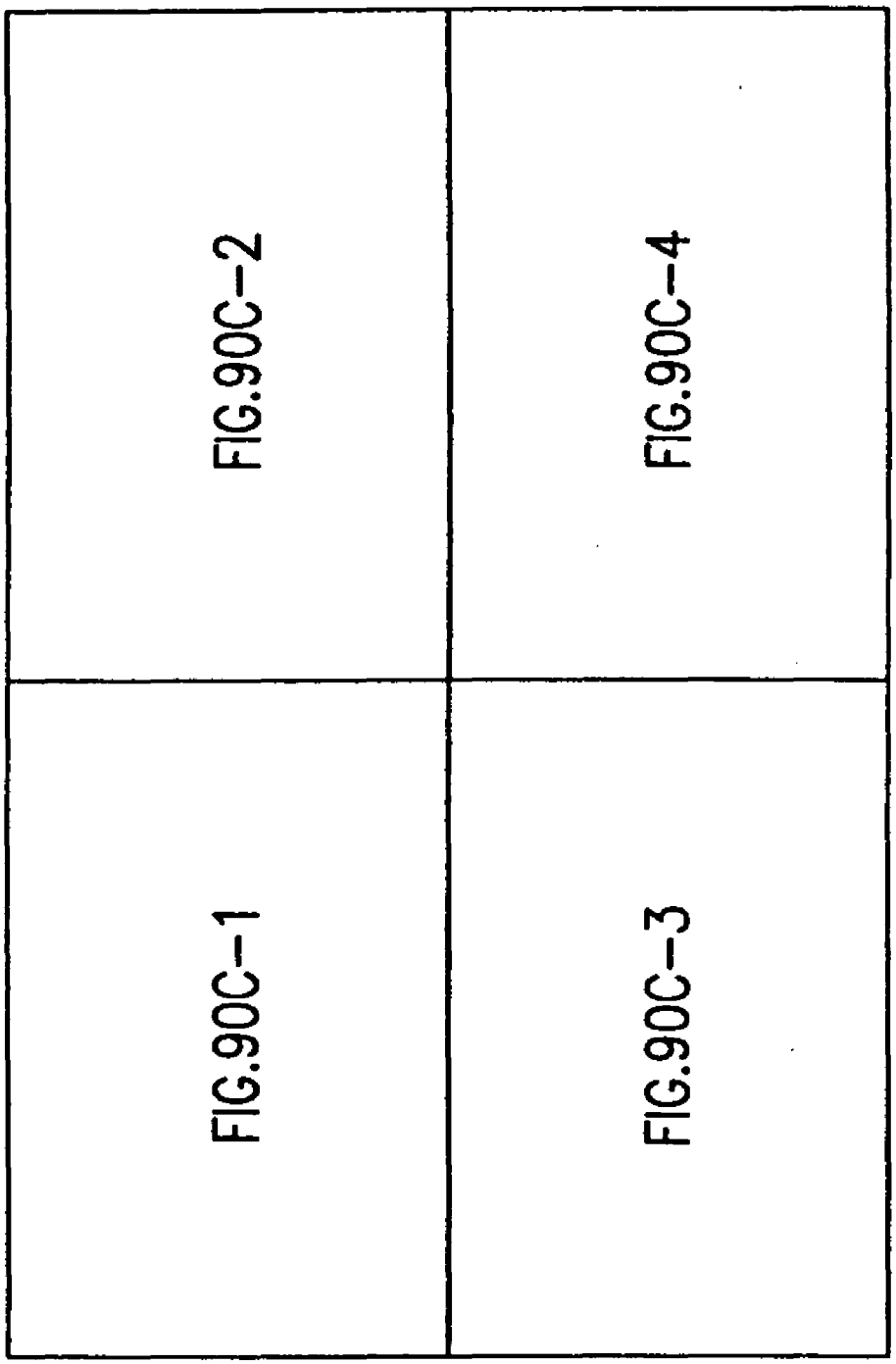

FIG.90C

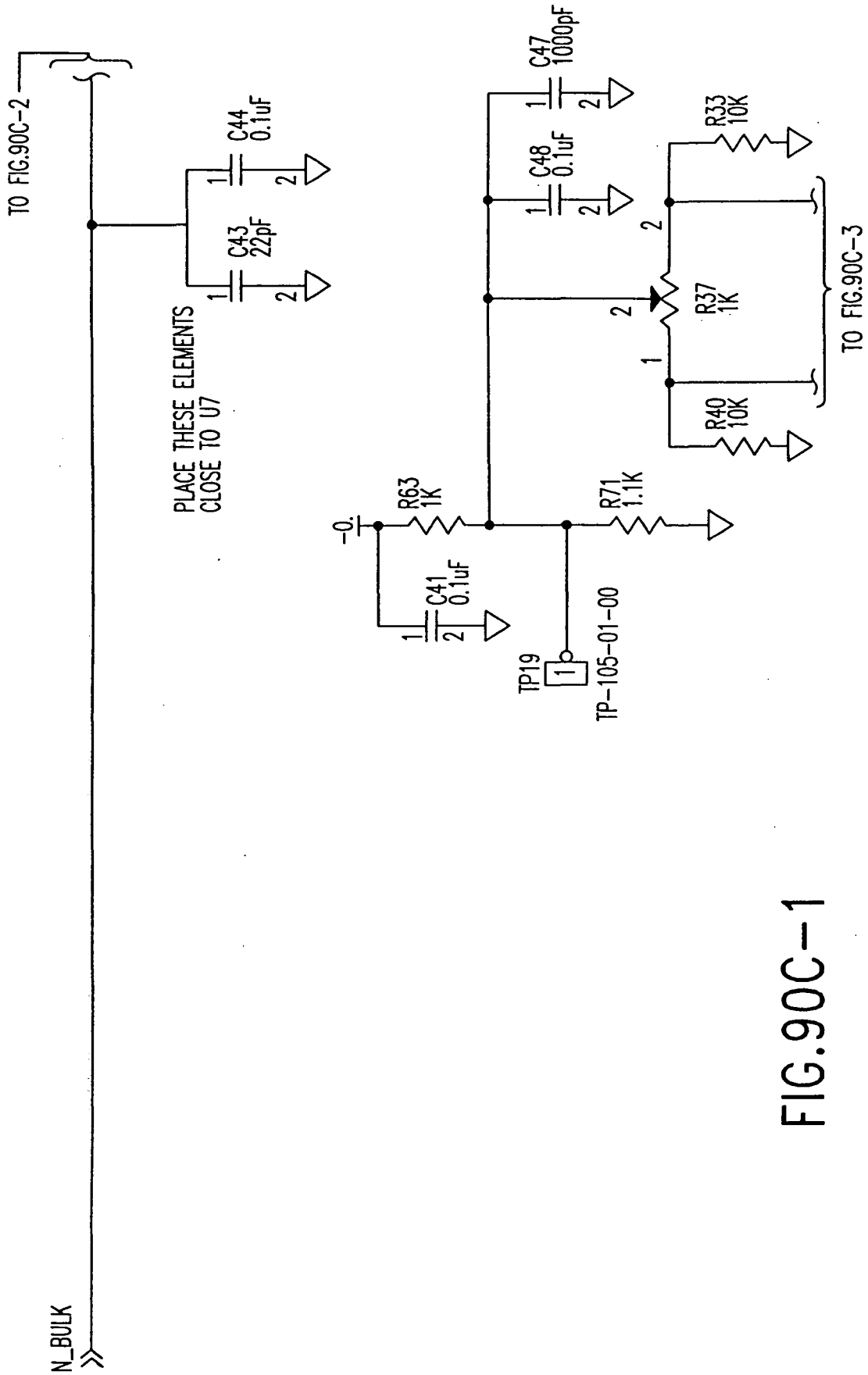
TO FIG.90C-2
N_BULK
C44
0.1uF
C43
22pF
PLACE THESE ELEMENTS
CLOSE TO U7
C47
1000pF
C48
0.1uF
R33
10K
R37
1K
R40
10K
TO FIG.90C-3
R63
1K
R71
1.1K
C41
0.1uF
TP19
TP-105-01-00

FIG.90C-1

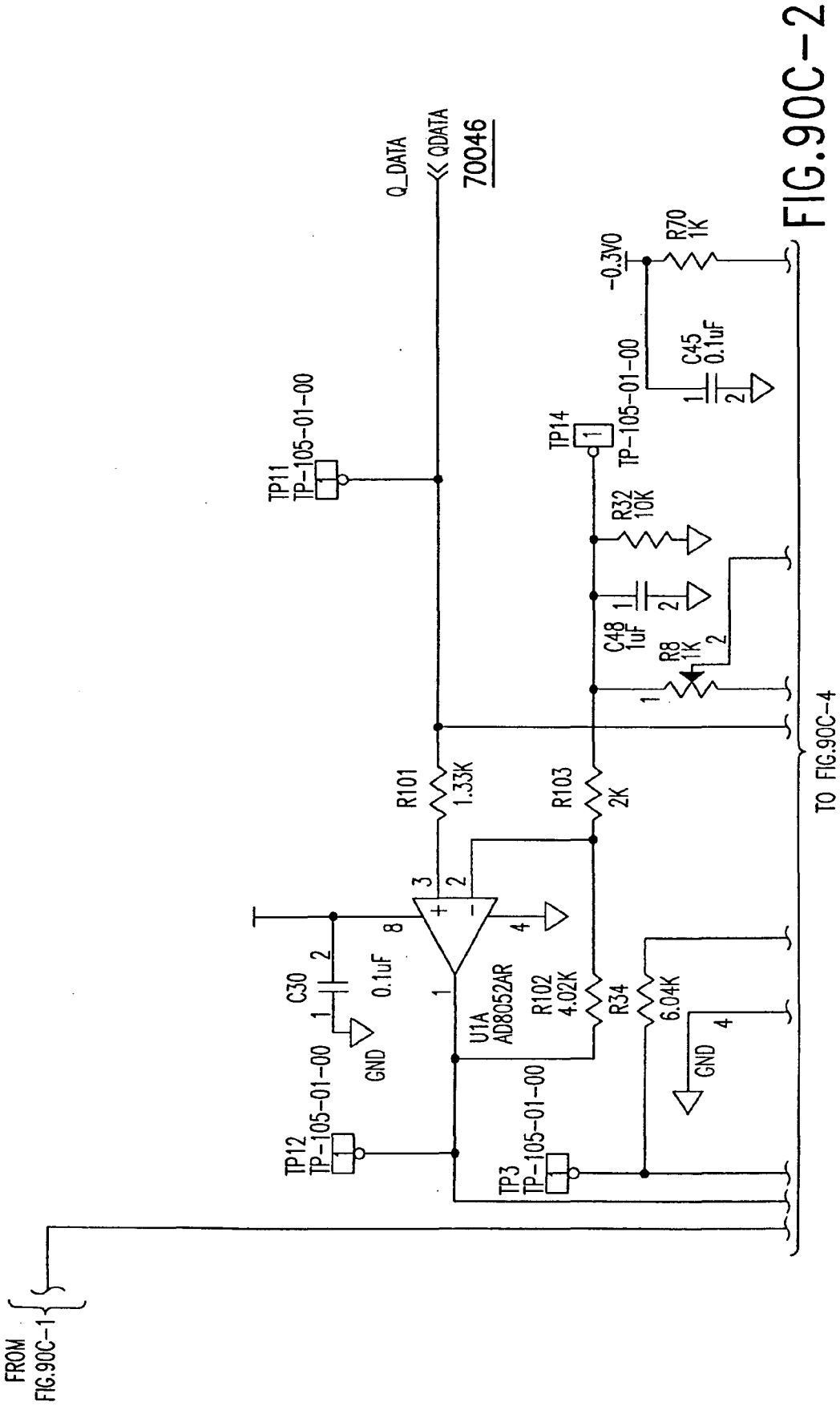
FIG.90C-2
70046
Q_DATA
QDATA
TP11
TP-105-01-00
TP14
TP-105-01-00
-0.3V0
R70
1K
C45
0.1uF
R32
10K
C48
1uF
R8
1K
R101
1.33K
R103
2K
U1A
AD8052AR
R102
4.02K
R34
6.04K
C30
0.1uF
GND
TP12
TP-105-01-00
TP3
TP-105-01-00
TO FIG.90C-4
FROM
FIG.90C-1

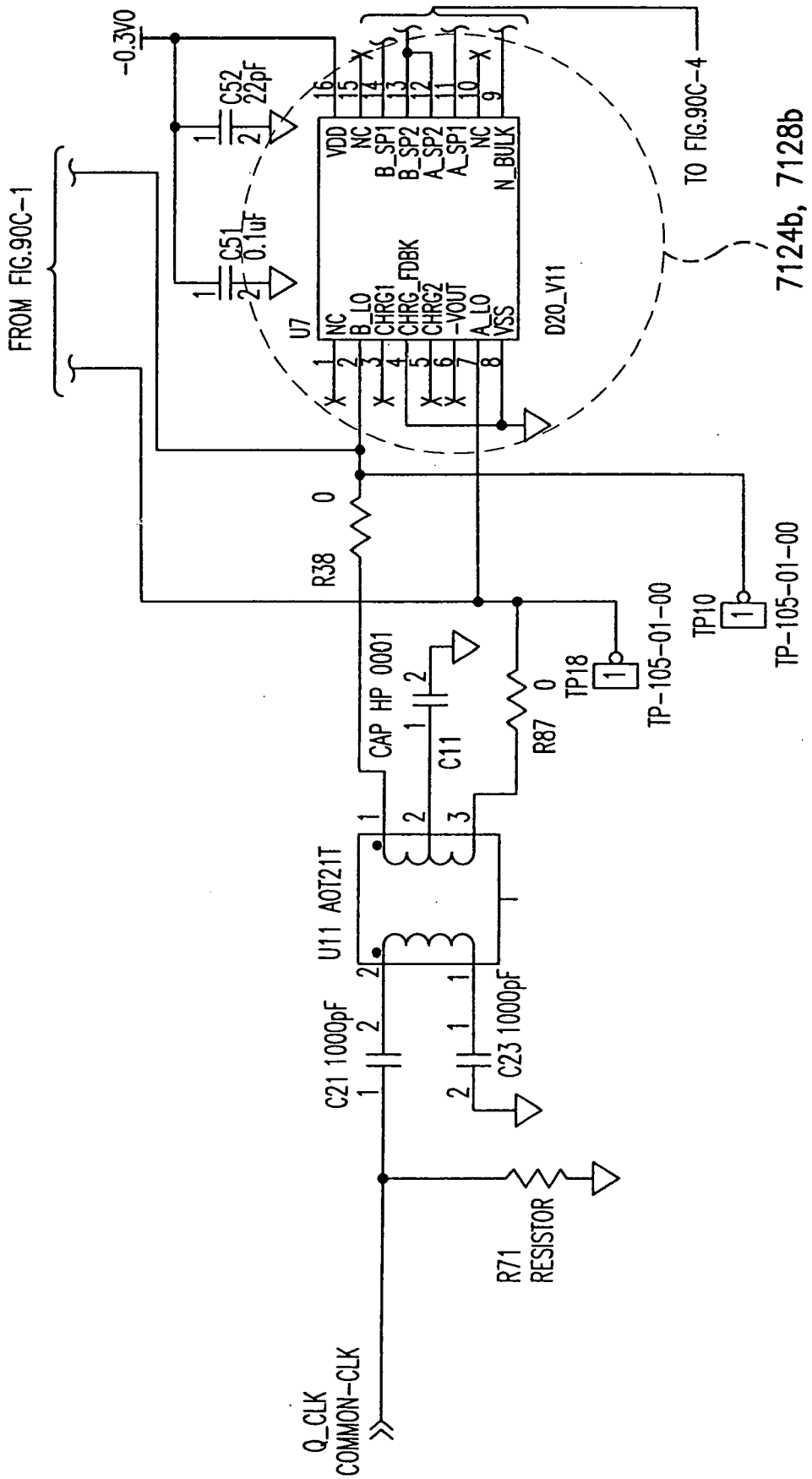
-0.3V0
C52
22pF
C51
0.1uF
FROM FIG.90C-1
U7
NC
B_LO
CHRG1
CHRG_FDBK
CHRG2
-VOUT
A_LO
VSS
VDD
NC
B_SP1
B_SP2
A_SP1
A_SP2
NC
N_BULK
D20_V11
TO FIG.90C-4
7124b, 7128b
R38
0
CAP HP 0001
C11
R87
0
TP18
TP-105-01-00
TP10
TP-105-01-00
U11 AOT21T
C21 1000pF
C23 1000pF
R71
RESISTOR
Q_CLK
COMMON-CLK

FIG.90C-3

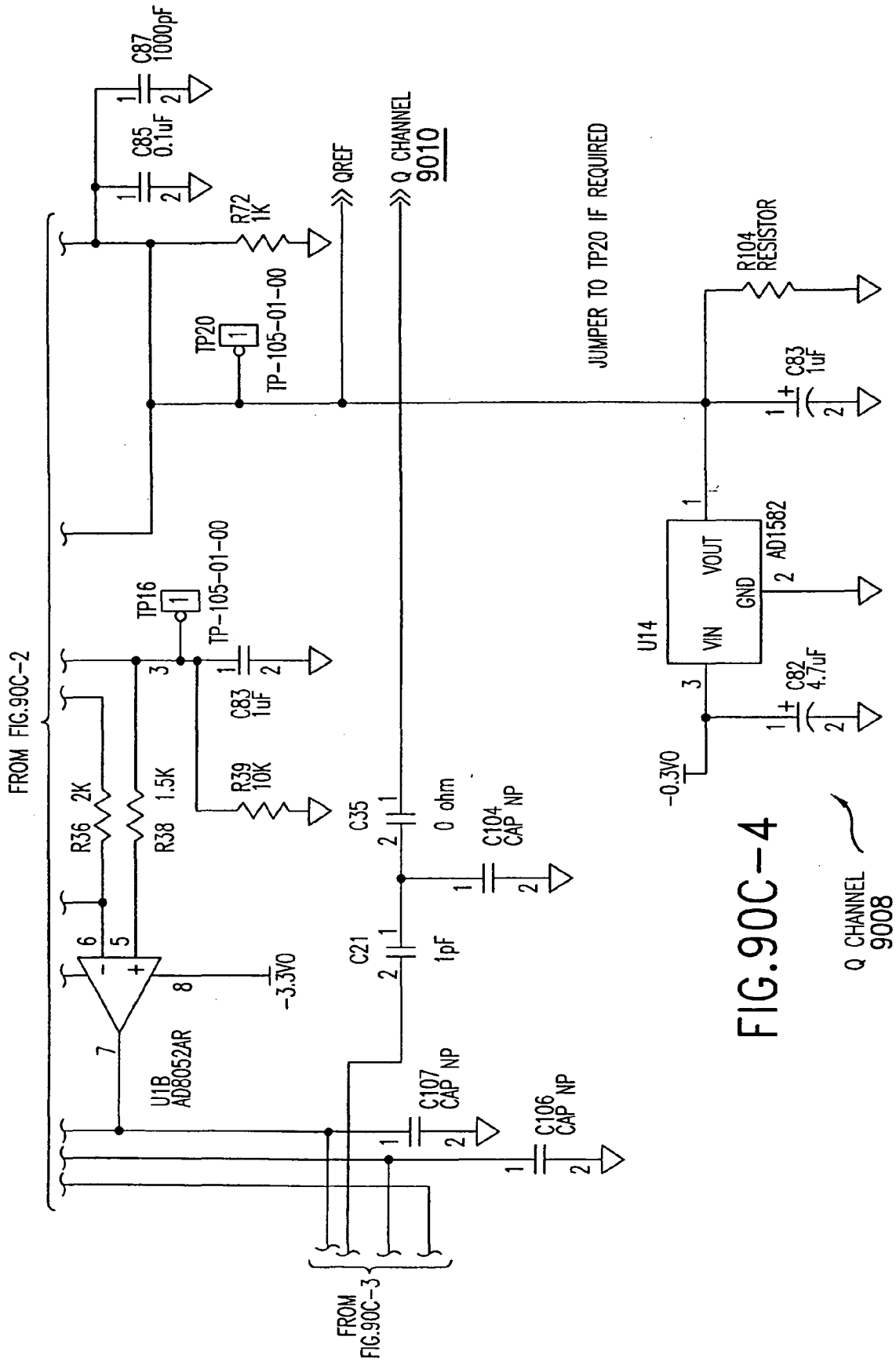
FROM FIG.90C-2
C87 1000pF
C85 0.1uF
R72 1K
TP20
TP-105-01-00
QREF
Q CHANNEL 9010
JUMPER TO TP20 IF REQUIRED
R104 RESISTOR
C83 1uF
U14
VIN
VOUT
GND
AD1582
C82 4.7uF
-0.3V0
TP16
TP-105-01-00
C83 1uF
R39 10K
R36 2K
R38 1.5K
U1B AD8052AR
-3.3V0
C35 0 ohm
C104 CAP NP
C21 1pF
C107 CAP NP
C106 CAP NP
FROM FIG.90C-3
Q CHANNEL 9008

FIG.90C-4

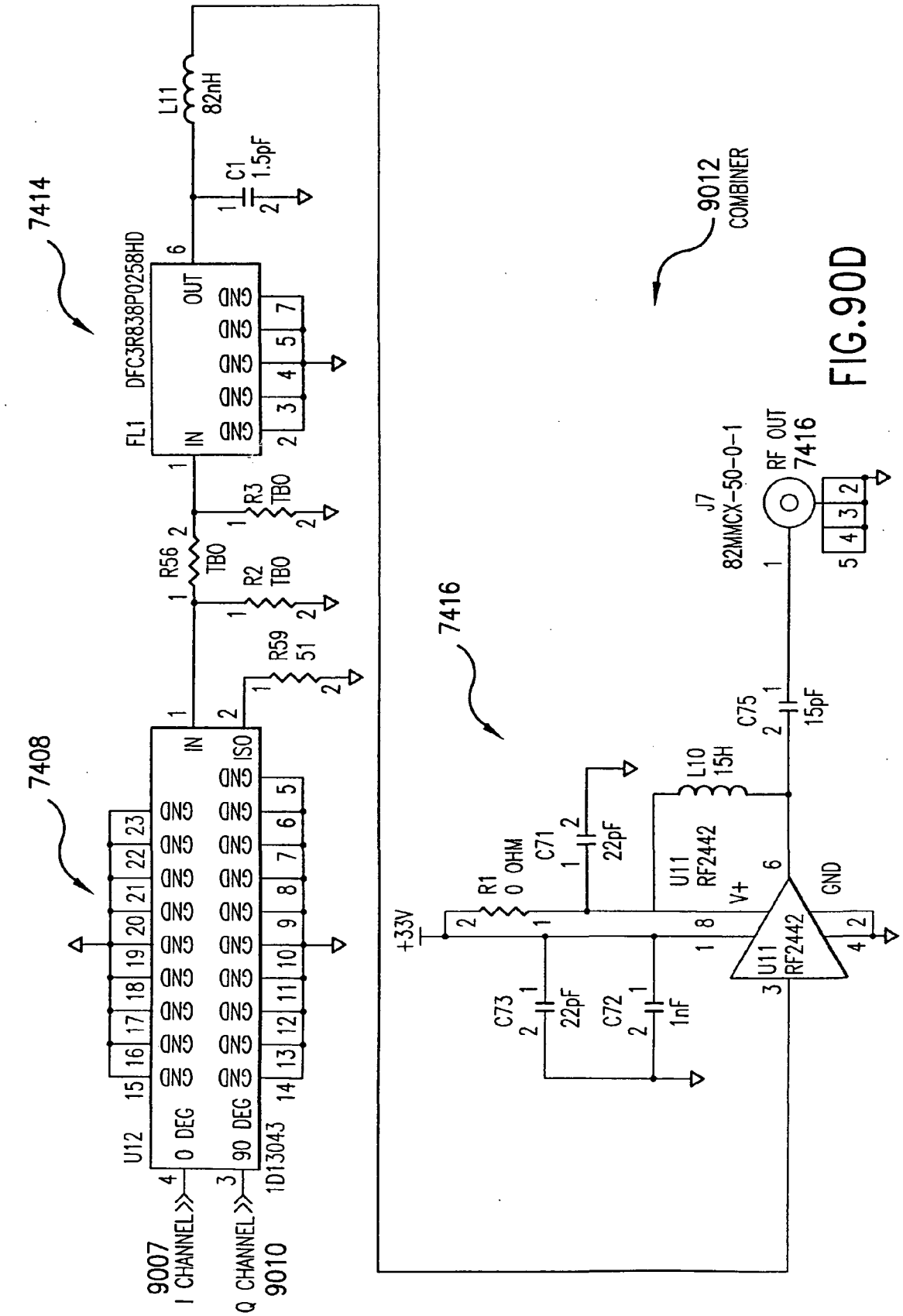
7414
FL1 DFC3R838P0258HD
IN
OUT
GND
L11 82nH
C1 1.5pF
R3 TBO
R56 TBO
R2 TBO
R59 51
7408
U12
0 DEG
90 DEG
ISO
1D13043
9007 I CHANNEL
9010 Q CHANNEL
9012 COMBINER
7416
+33V
R1 0 OHM
C71 22pF
C73 22pF
C72 1nF
L10 15H
U11 RF2442
V+
GND
C75 15pF
J7 82MMCX-50-0-1
RF OUT 7416

FIG.90D

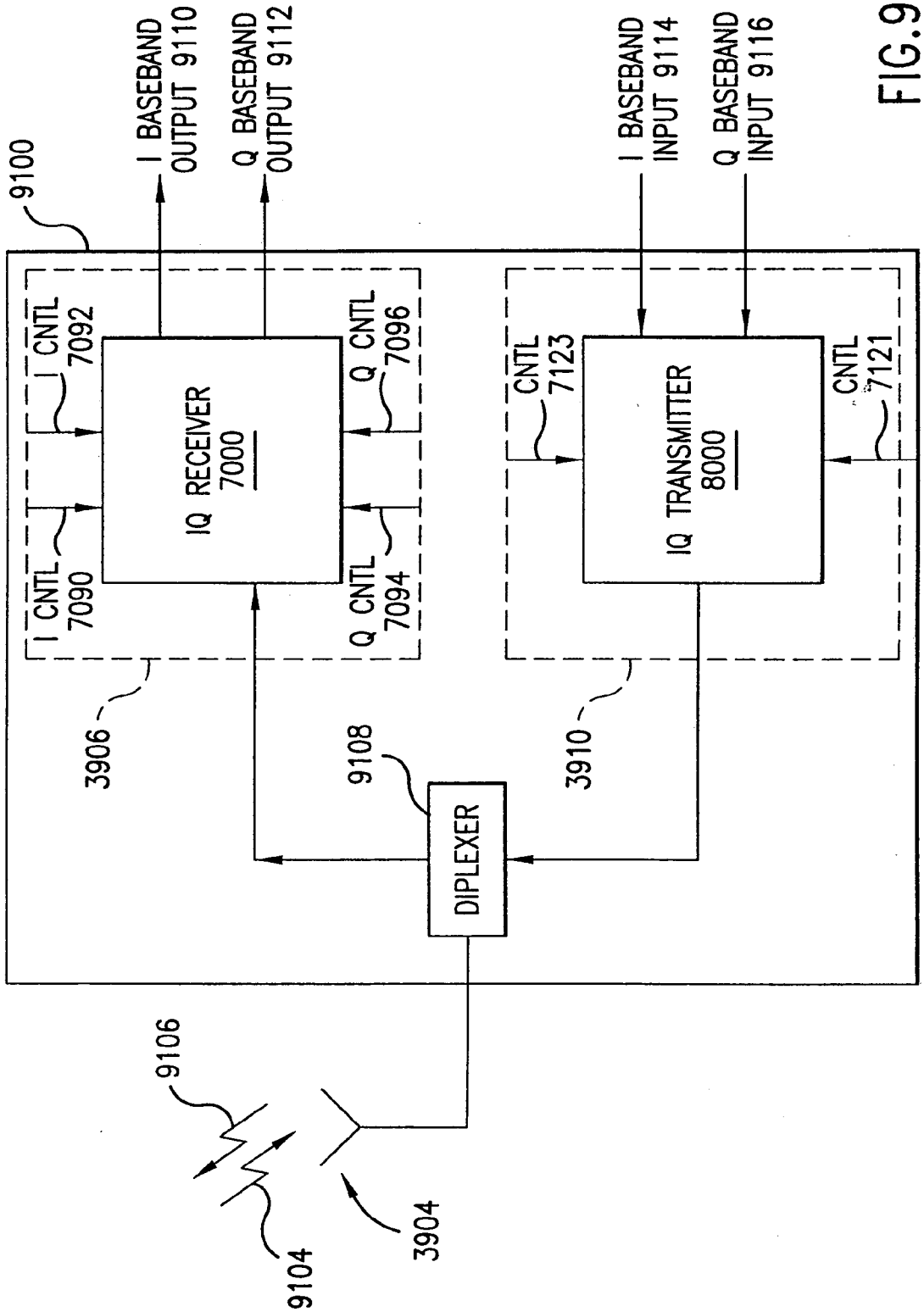
9100
I BASEBAND OUTPUT 9110
Q BASEBAND OUTPUT 9112
I BASEBAND INPUT 9114
Q BASEBAND INPUT 9116
I CNTL 7092
I CNTL 7090
IQ RECEIVER 7000
Q CNTL 7096
Q CNTL 7094
CNTL 7123
CNTL 7121
IQ TRANSMITTER 8000
3906
3910
9108
DIPLEXER
9106
9104
3904

FIG.91

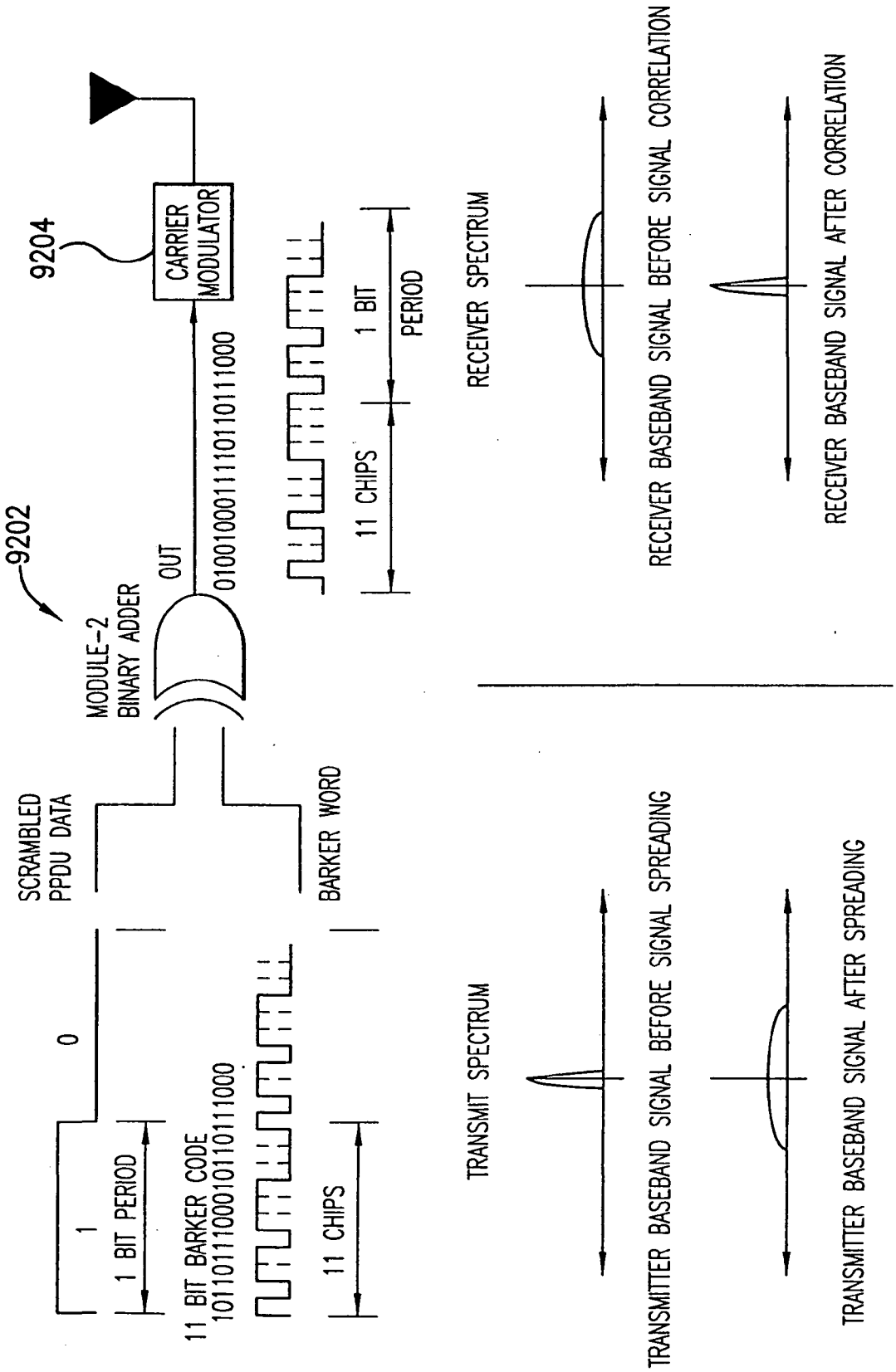
9202
9204
SCRAMBLED PPDU DATA
MODULE-2 BINARY ADDER
OUT
CARRIER MODULATOR
0
1
1 BIT PERIOD
11 BIT BARKER CODE
10110111000110111000
11 CHIPS
BARKER WORD
01001000111101101110 00
11 CHIPS
1 BIT PERIOD
TRANSMIT SPECTRUM
TRANSMITTER BASEBAND SIGNAL BEFORE SIGNAL SPREADING
TRANSMITTER BASEBAND SIGNAL AFTER SPREADING
RECEIVER SPECTRUM
RECEIVER BASEBAND SIGNAL BEFORE SIGNAL CORRELATION
RECEIVER BASEBAND SIGNAL AFTER CORRELATION

FIG.92

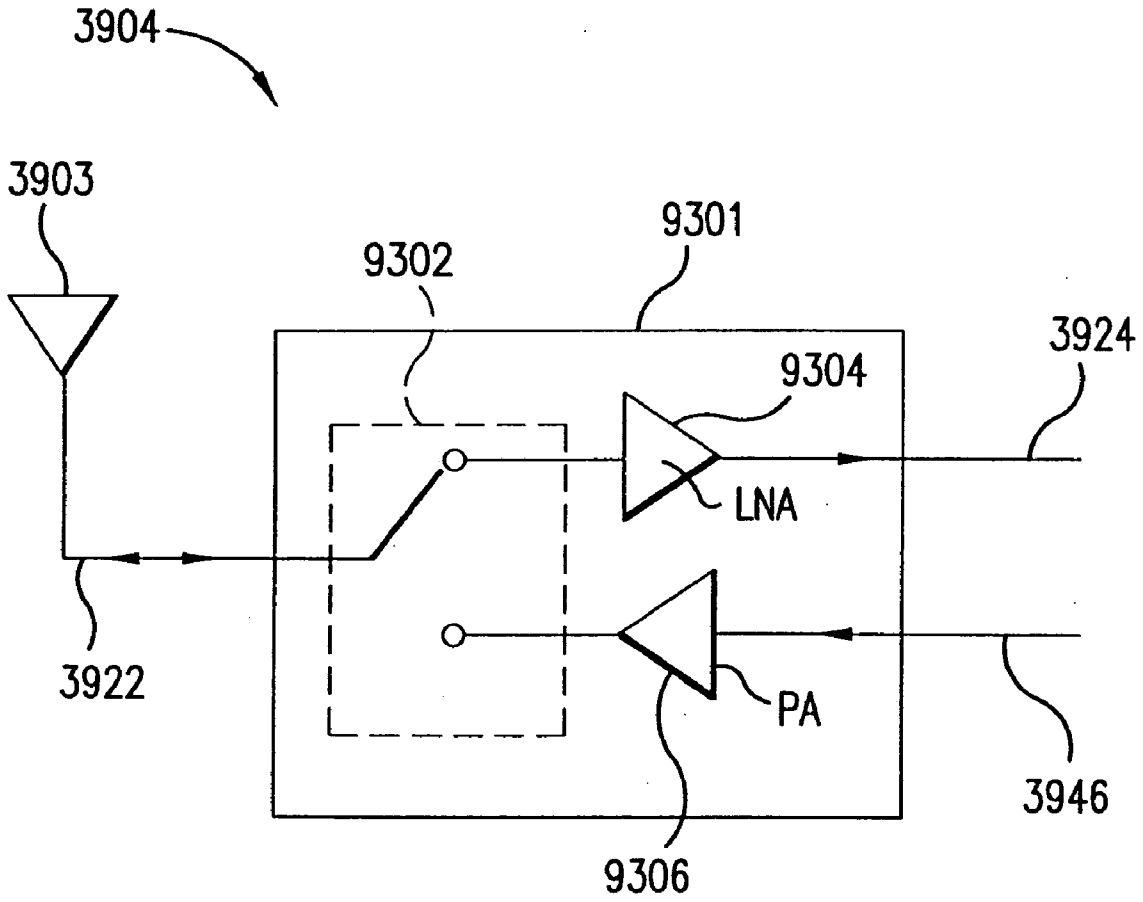

FIG.93

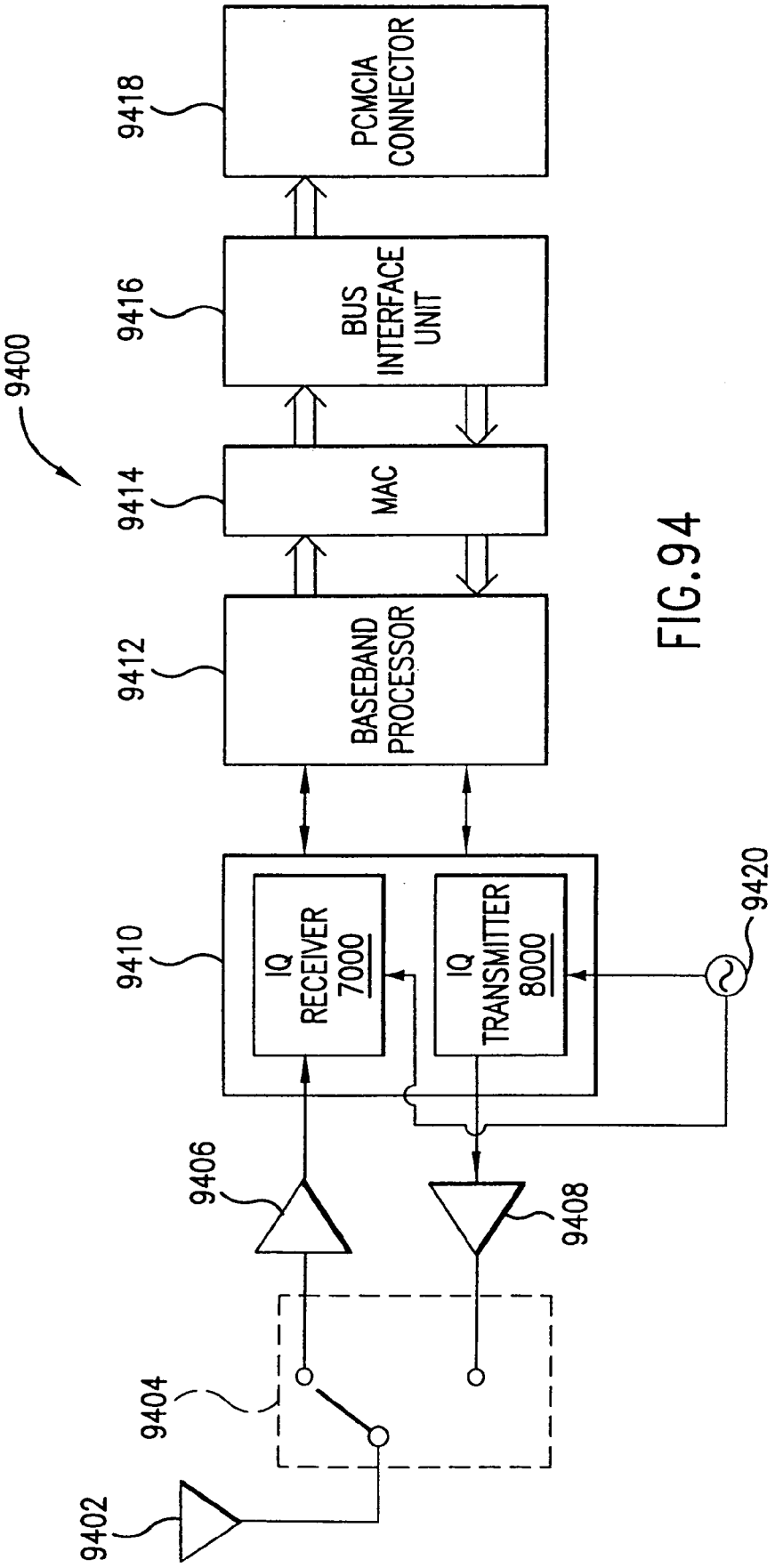
9400
9418
PCMCIA CONNECTOR
9416
BUS INTERFACE UNIT
9414
MAC
9412
BASEBAND PROCESSOR
9410
IQ RECEIVER 7000
IQ TRANSMITTER 8000
9420
9406
9408
9404
9402

FIG.94

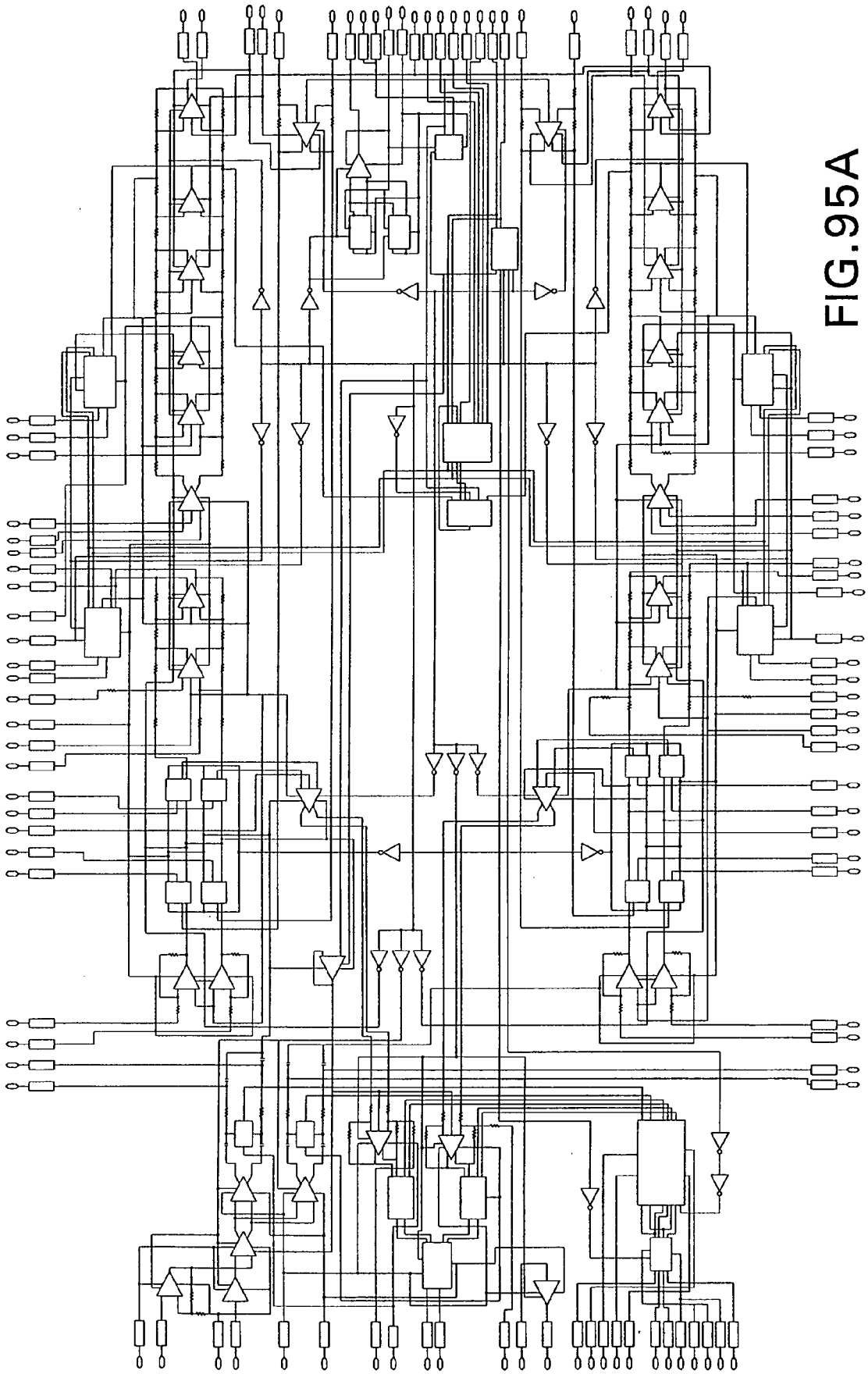

FIG.95A

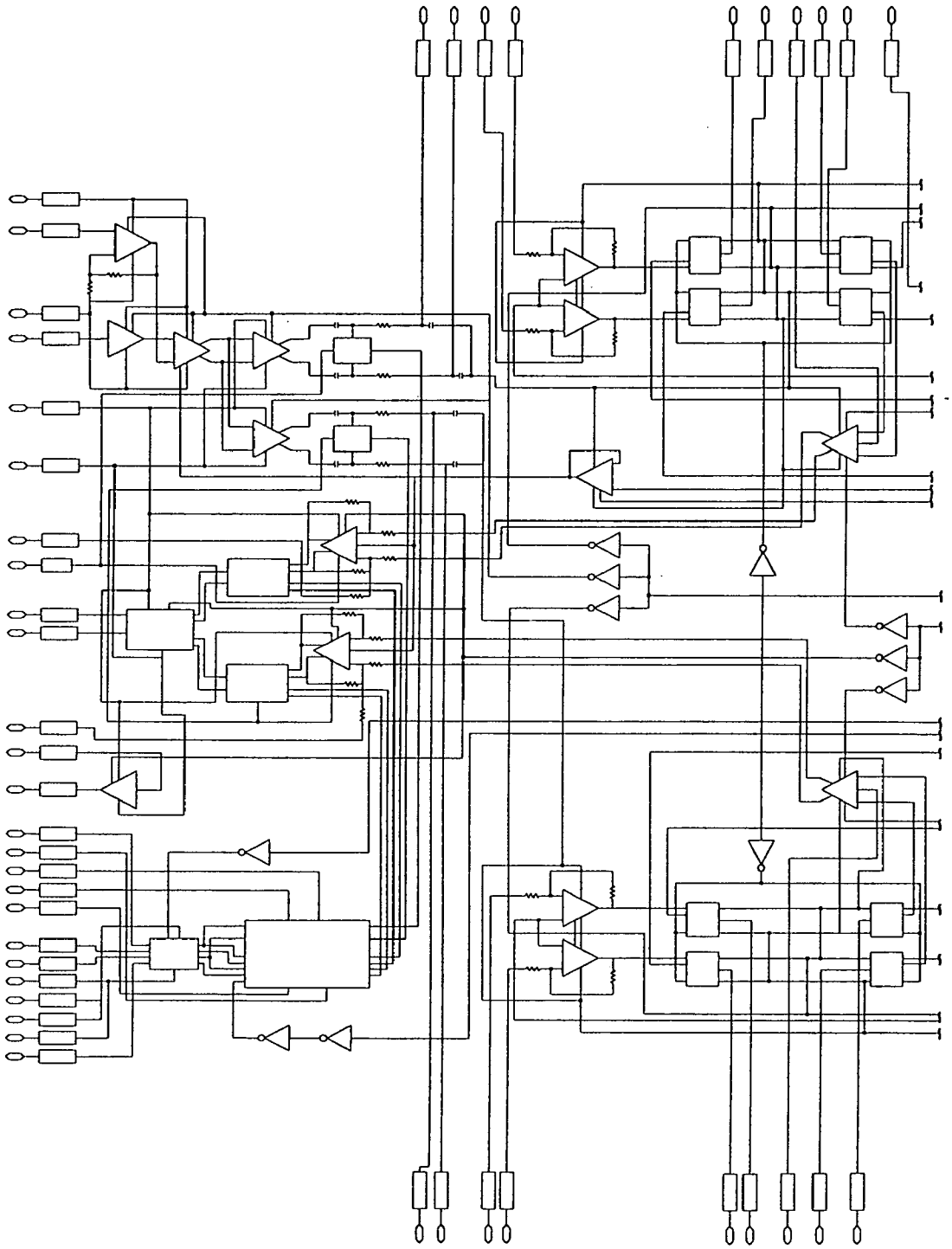

FIG.95B

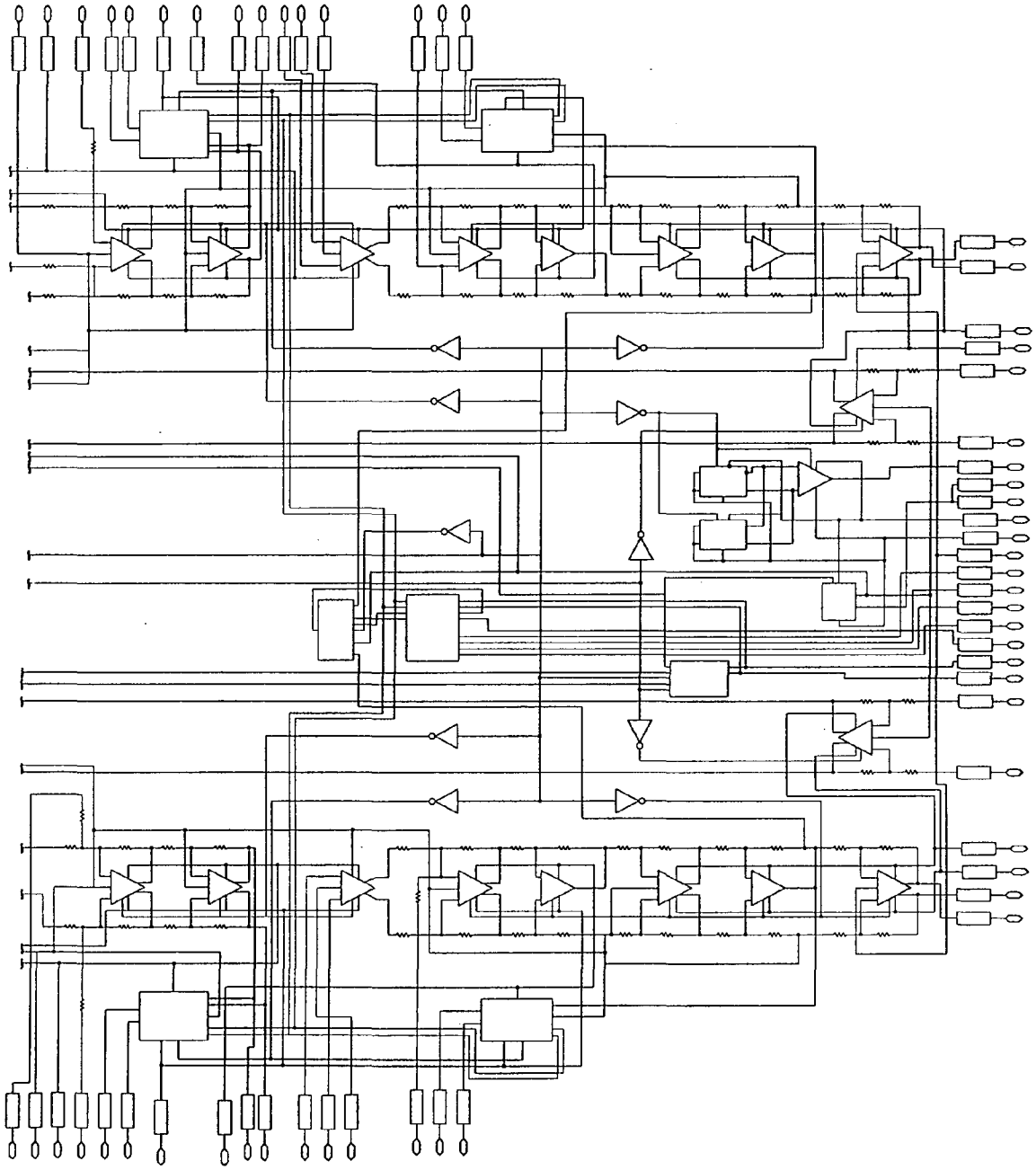

FIG.95C

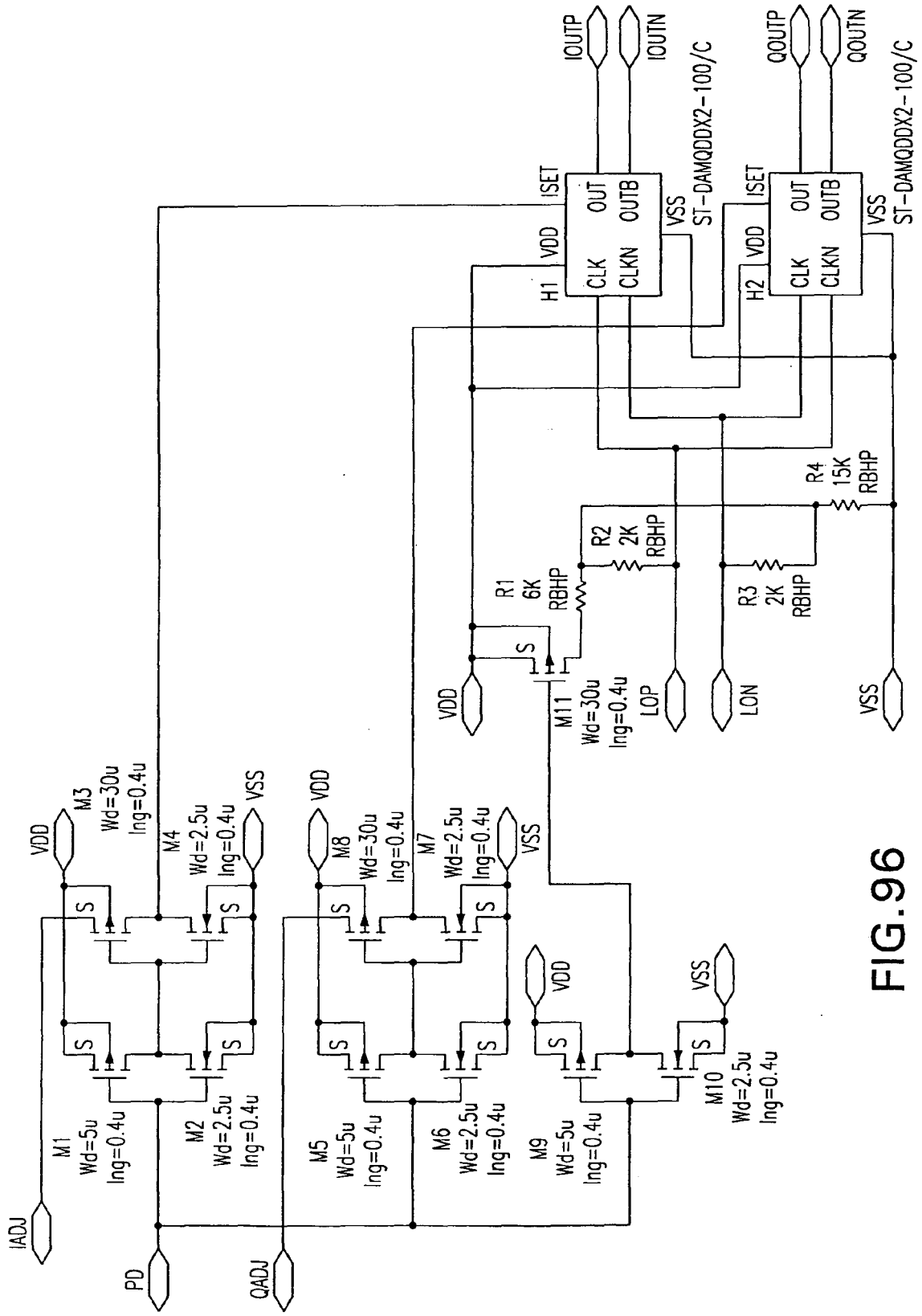
IOUTP
IOUTN
QOUTP
QOUTN
ST-DAMQDDX2-100/C
ST-DAMQDDX2-100/C
ISET
OUT
OUTB
VDD
CLK
CLKN
VSS
H1
H2
R1 6K RBHP
R2 2K RBHP
R3 2K RBHP
R4 15K RBHP
M11 Wd=30u lng=0.4u
LOP
LON
M1 Wd=5u lng=0.4u
M2 Wd=2.5u lng=0.4u
M3 Wd=30u lng=0.4u
M4 Wd=2.5u lng=0.4u
M5 Wd=5u lng=0.4u
M6 Wd=2.5u lng=0.4u
M7 Wd=2.5u lng=0.4u
M8 Wd=30u lng=0.4u
M9 Wd=5u lng=0.4u
M10 Wd=2.5u lng=0.4u
IADJ
PD
QADJ

FIG.96

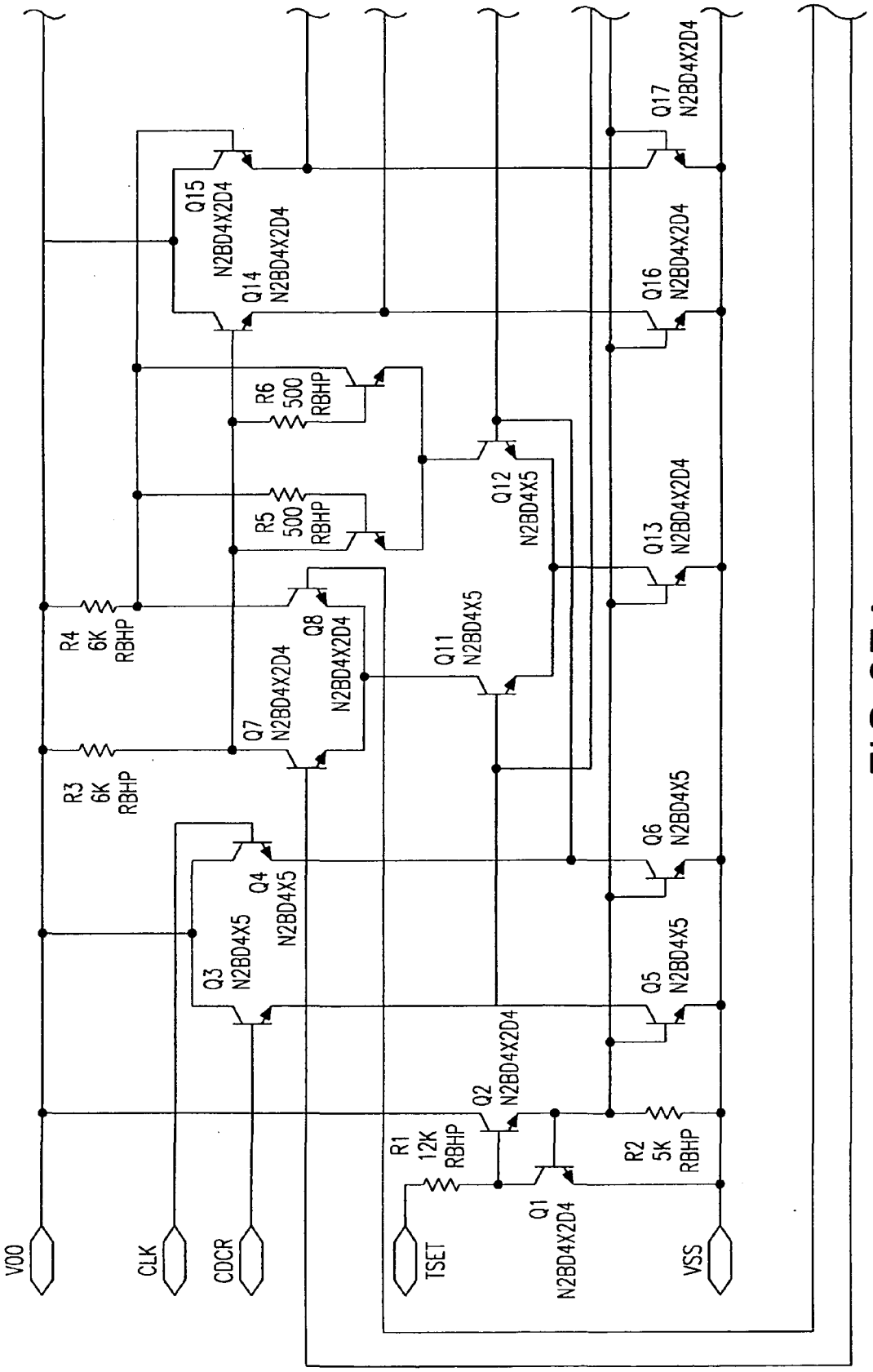
VDD
CLK
CDCR
TSET
VSS
R1 12K RBHP
R2 5K RBHP
R3 6K RBHP
R4 6K RBHP
R5 500 RBHP
R6 500 RBHP
Q1 N2BD4X2D4
Q2 N2BD4X2D4
Q3 N2BD4X5
Q4 N2BD4X5
Q5 N2BD4X5
Q6 N2BD4X5
Q7 N2BD4X2D4
Q8 N2BD4X2D4
Q11 N2BD4X5
Q12 N2BD4X5
Q13 N2BD4X2D4
Q14 N2BD4X2D4
Q15 N2BD4X2D4
Q16 N2BD4X2D4
Q17 N2BD4X2D4

FIG.97A

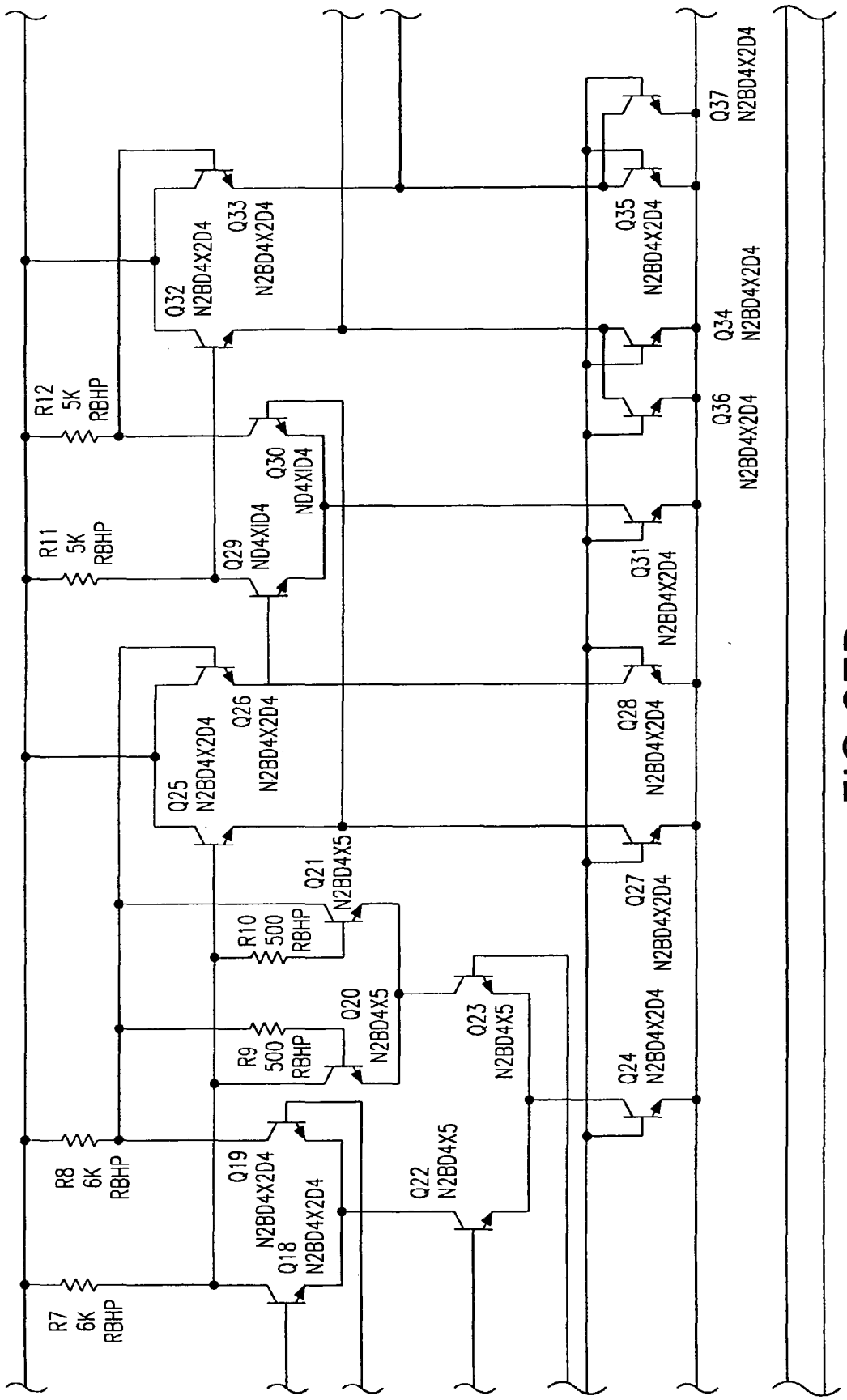
R12
5K
RBHP
R11
5K
RBHP
R8
6K
RBHP
R7
6K
RBHP
Q32
N2BD4X2D4
Q33
N2BD4X2D4
Q30
ND4XID4
Q29
ND4XID4
Q25
N2BD4X2D4
Q26
N2BD4X2D4
Q21
N2BD4X5
R10
500
RBHP
R9
500
RBHP
Q20
N2BD4X5
Q19
N2BD4X2D4
Q18
N2BD4X2D4
Q22
N2BD4X5
Q23
N2BD4X5
Q37
N2BD4X2D4
Q35
N2BD4X2D4
Q34
N2BD4X2D4
Q36
N2BD4X2D4
Q31
N2BD4X2D4
Q28
N2BD4X2D4
Q27
N2BD4X2D4
Q24
N2BD4X2D4

FIG.97B

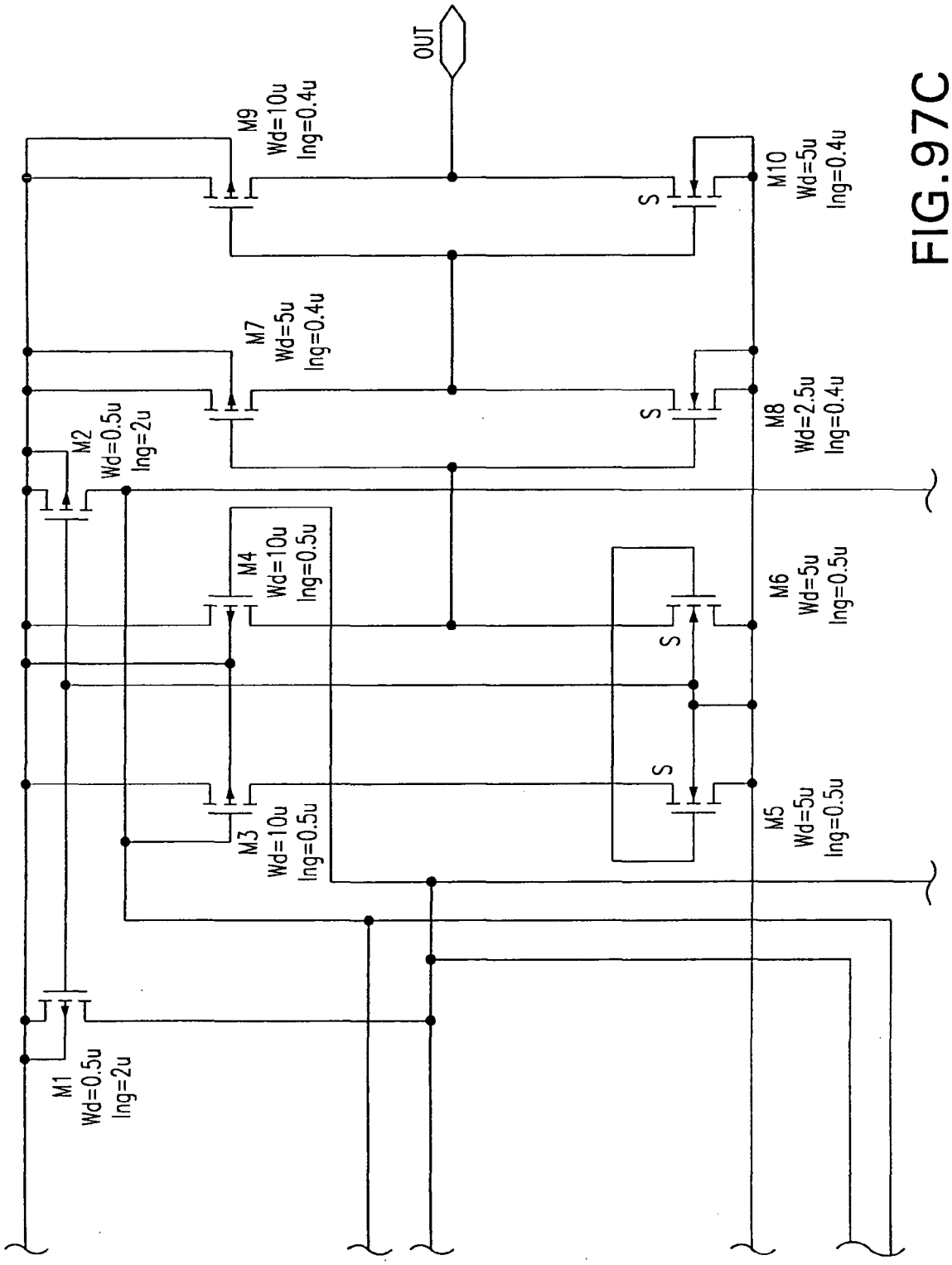
OUT
M9
Wd=10u
lng=0.4u
M10
Wd=5u
lng=0.4u
M7
Wd=5u
lng=0.4u
M8
Wd=2.5u
lng=0.4u
M2
Wd=0.5u
lng=2u
M4
Wd=10u
lng=0.5u
M6
Wd=5u
lng=0.5u
M3
Wd=10u
lng=0.5u
M5
Wd=5u
lng=0.5u
M1
Wd=0.5u
lng=2u
S

FIG.97C

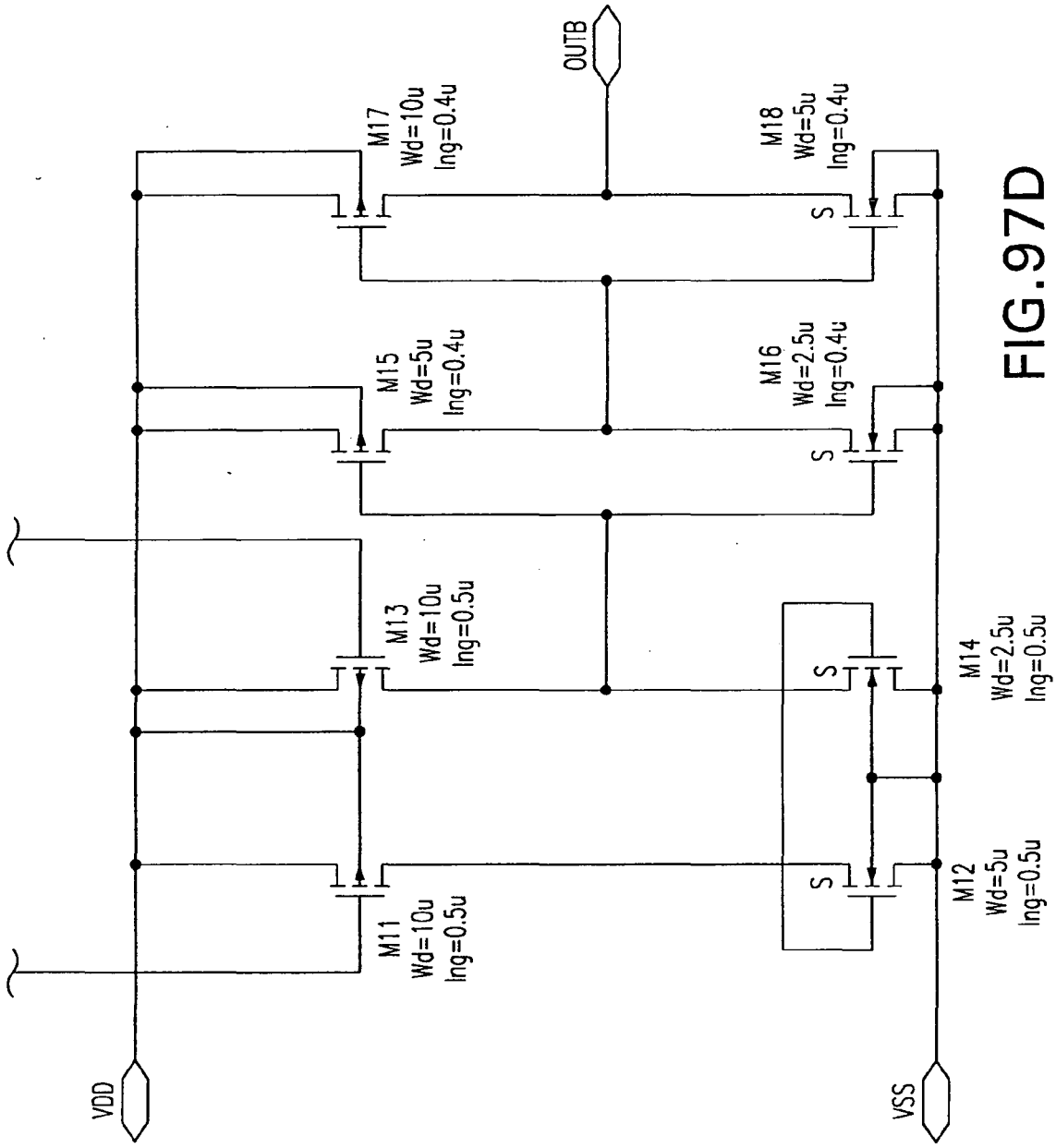
VDD
M11
Wd=10u
lng=0.5u
M13
Wd=10u
lng=0.5u
M15
Wd=5u
lng=0.4u
M17
Wd=10u
lng=0.4u
OUTB
M18
Wd=5u
lng=0.4u
M16
Wd=2.5u
lng=0.4u
M14
Wd=2.5u
lng=0.5u
M12
Wd=5u
lng=0.5u
VSS

FIG.97D

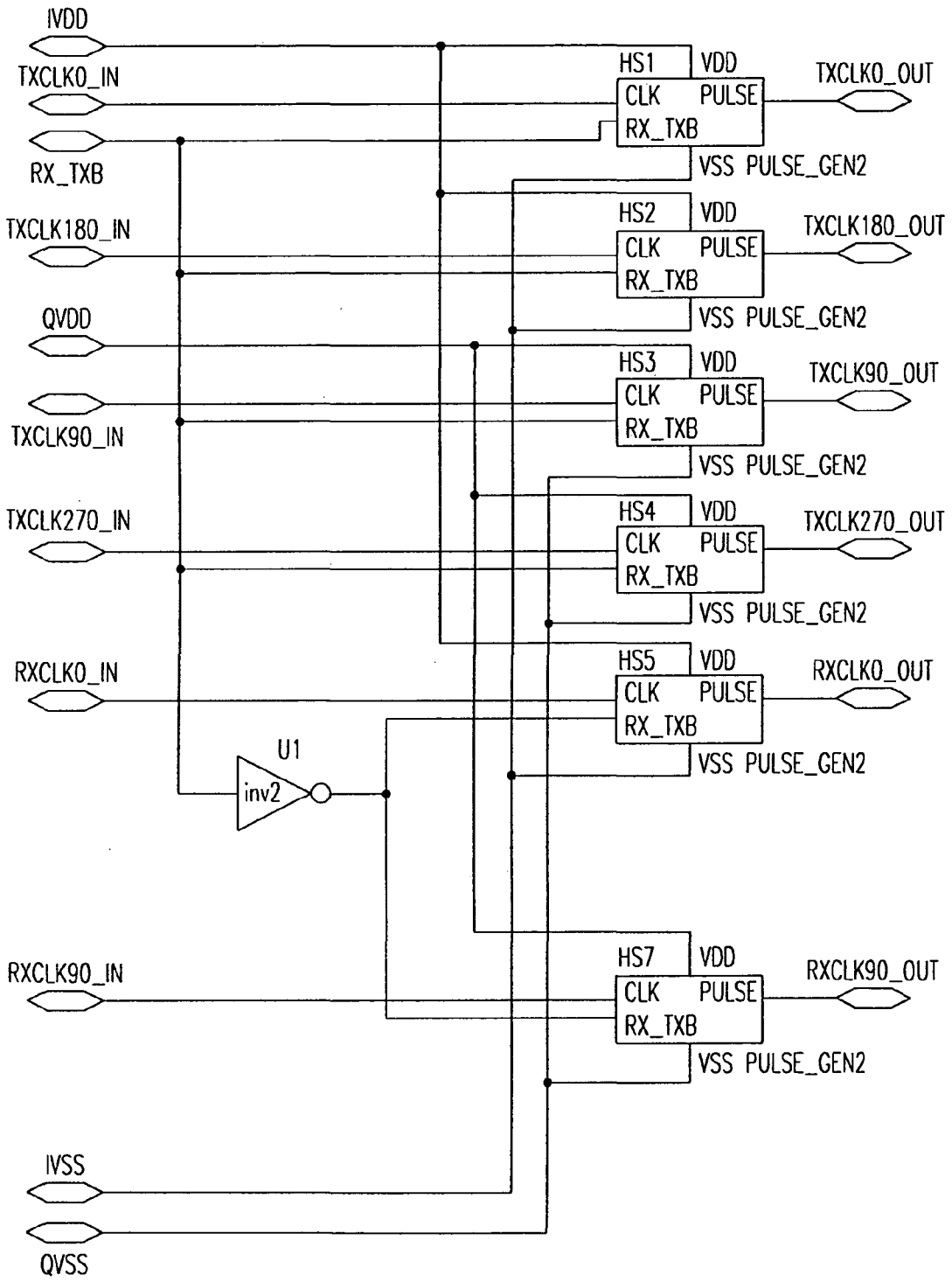
IVDD
TXCLK0_IN
RX_TXB
TXCLK180_IN
QVDD
TXCLK90_IN
TXCLK270_IN
RXCLK0_IN
RXCLK90_IN
IVSS
QVSS
HS1
VDD
CLK
PULSE
RX_TXB
VSS PULSE_GEN2
TXCLK0_OUT
HS2
TXCLK180_OUT
HS3
TXCLK90_OUT
HS4
TXCLK270_OUT
HS5
RXCLK0_OUT
HS7
RXCLK90_OUT
U1
inv2

FIG.98

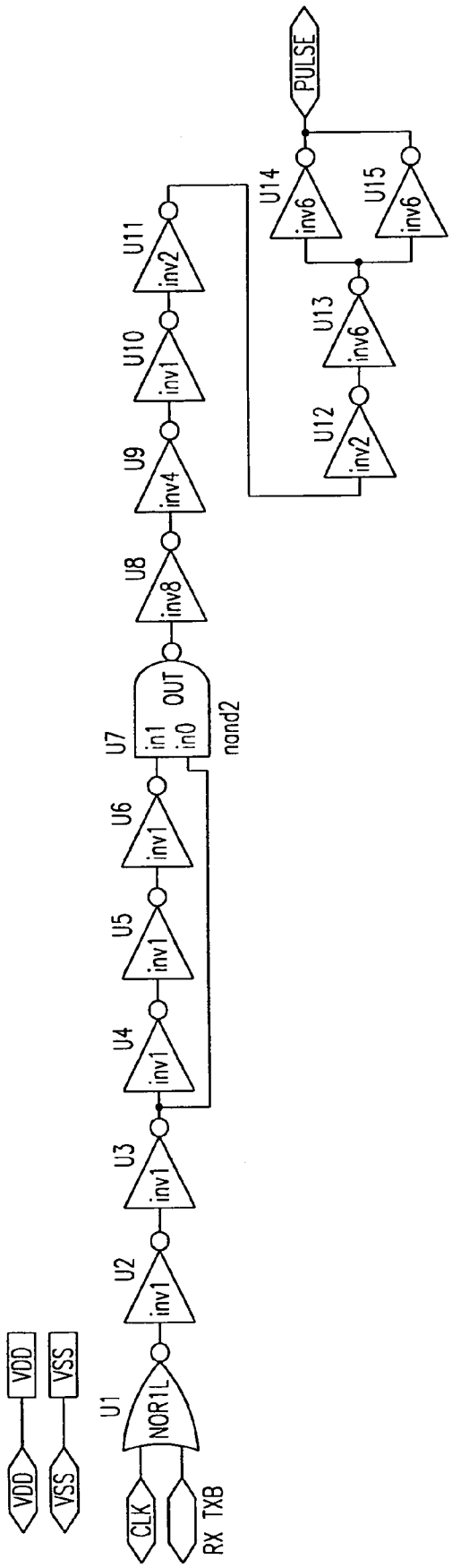
VDD
VSS
VDD
VSS
U1
NOR1L
CLK
RX TXB
U2
inv1
U3
inv1
U4
inv1
U5
inv1
U6
inv1
U7
in1
in0
OUT
nand2
U8
inv8
U9
inv4
U10
inv1
U11
inv2
U12
inv2
U13
inv6
U14
inv6
U15
inv6
PULSE

FIG.99

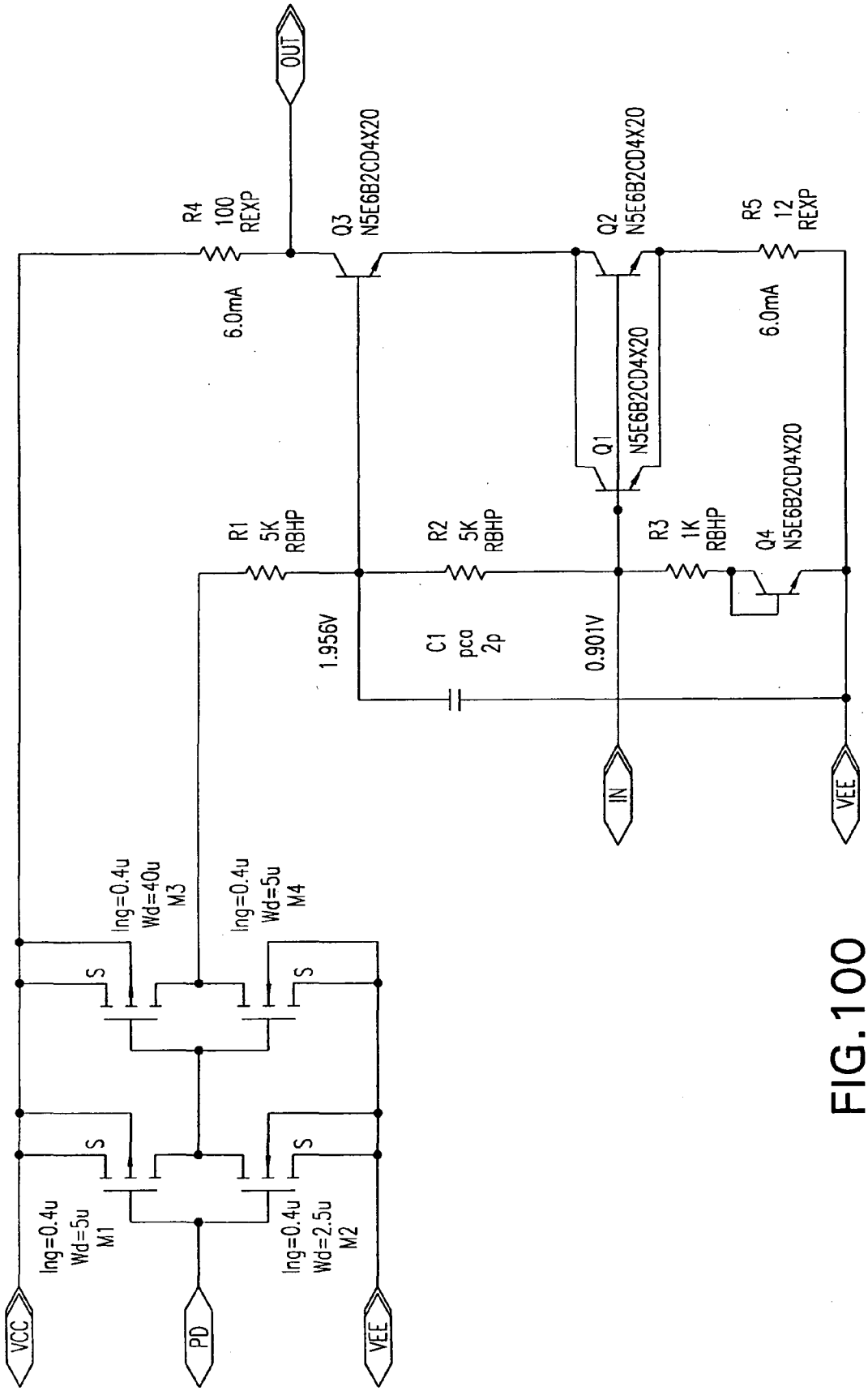
OUT
R4
100
REXP
6.0mA
Q3
N5E6B2CD4X20
Q2
N5E6B2CD4X20
R5
12
REXP
6.0mA
Q1
N5E6B2CD4X20
Q4
N5E6B2CD4X20
R1
5K
RBHP
R2
5K
RBHP
R3
1K
RBHP
1.956V
C1
pca
2p
0.901V
IN
VEE
lng=0.4u
Wd=40u
M3
lng=0.4u
Wd=5u
M4
S
S
S
S
lng=0.4u
Wd=5u
M1
lng=0.4u
Wd=2.5u
M2
VCC
PD
VEE

FIG.100

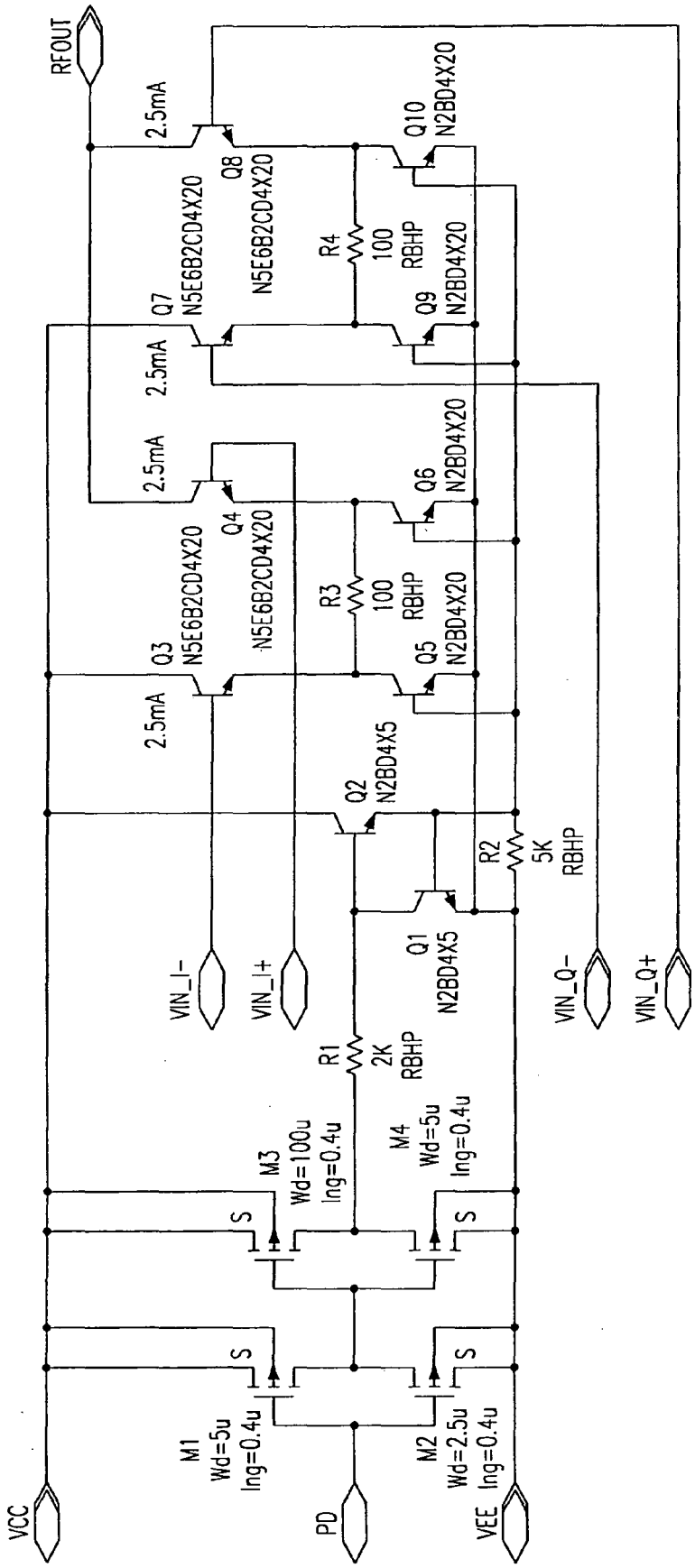
RFOUT
2.5mA
Q8
N5E6B2CD4X20
Q10
N2BD4X20
R4
100
RBHP
Q7
N5E6B2CD4X20
Q9
N2BD4X20
2.5mA
2.5mA
Q4
N5E6B2CD4X20
Q6
N2BD4X20
R3
100
RBHP
Q3
N5E6B2CD4X20
Q5
N2BD4X20
2.5mA
Q2
N2BD4X5
R2
5K
RBHP
Q1
N2BD4X5
VIN_I-
VIN_I+
VIN_Q-
VIN_Q+
R1
2K
RBHP
M3
Wd=100u
lng=0.4u
M4
Wd=5u
lng=0.4u
S
S
S
S
M1
Wd=5u
lng=0.4u
M2
Wd=2.5u
lng=0.4u
VCC
PD
VEE

FIG.101

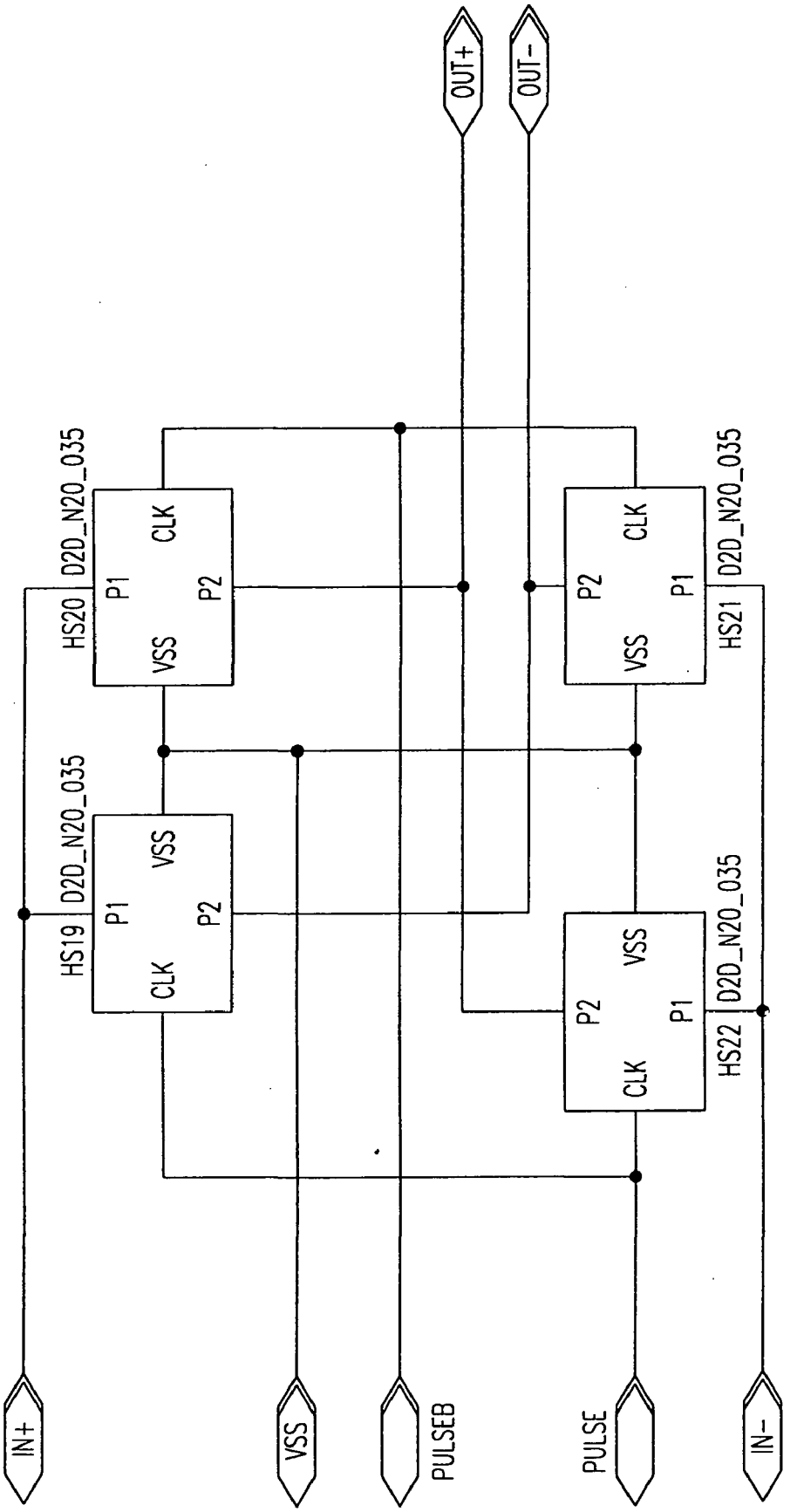
OUT+
OUT-
D2D_N20_035
HS20
P1
CLK
P2
VSS
D2D_N20_035
HS19
P1
VSS
P2
CLK
D2D_N20_035
HS21
P2
CLK
P1
VSS
D2D_N20_035
HS22
P2
VSS
P1
CLK
IN+
VSS
PULSEB
PULSE
IN-

FIG.102

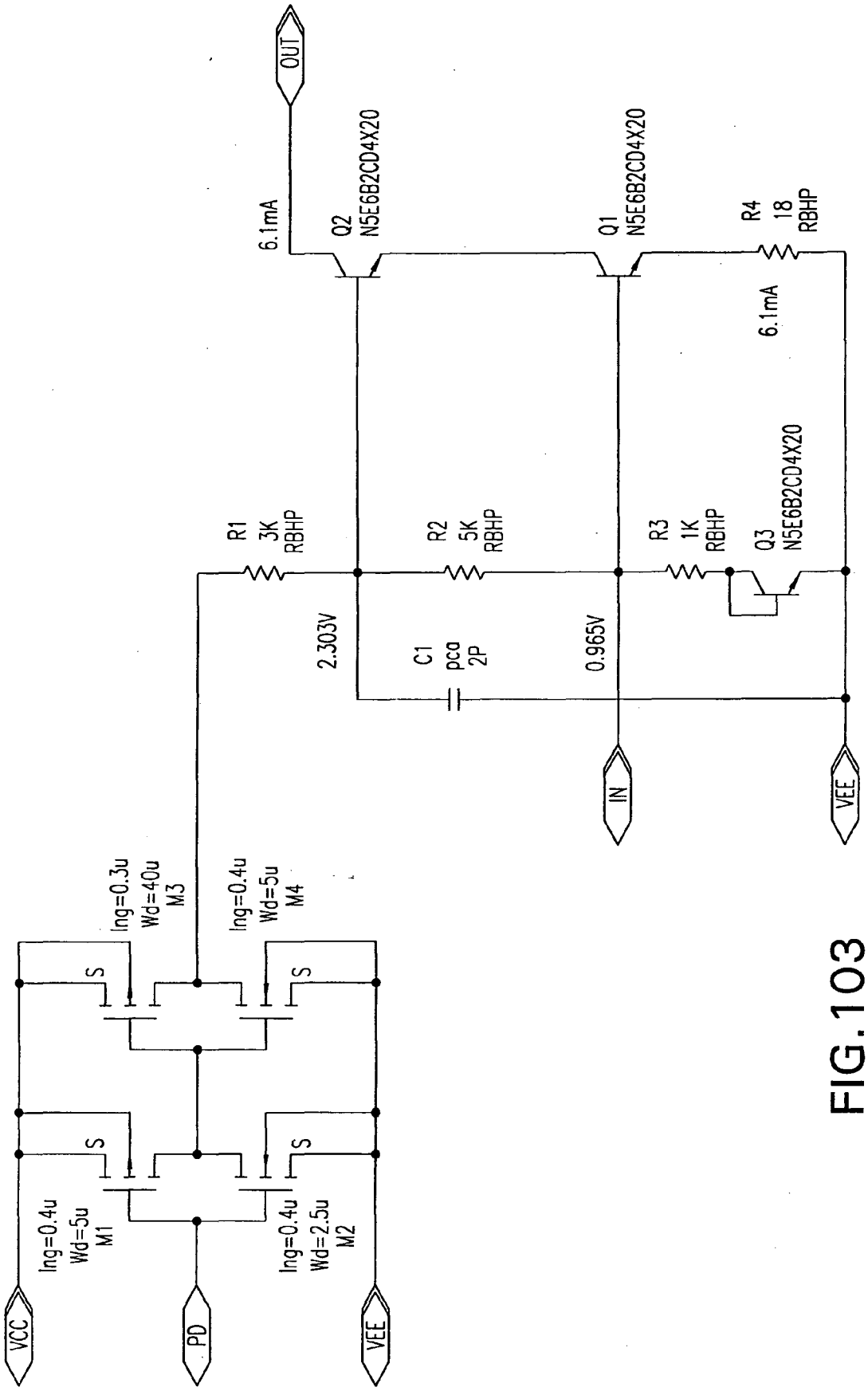
OUT
6.1mA
Q2
N5E6B2CD4X20
Q1
N5E6B2CD4X20
R4
18
RBHP
6.1mA
R1
3K
RBHP
R2
5K
RBHP
R3
1K
RBHP
Q3
N5E6B2CD4X20
2.303V
C1
pca
2P
0.965V
IN
VEE
lng=0.3u
Wd=40u
M3
lng=0.4u
Wd=5u
M4
S
S
S
S
lng=0.4u
Wd=5u
M1
lng=0.4u
Wd=2.5u
M2
VCC
PD
VEE

FIG. 103

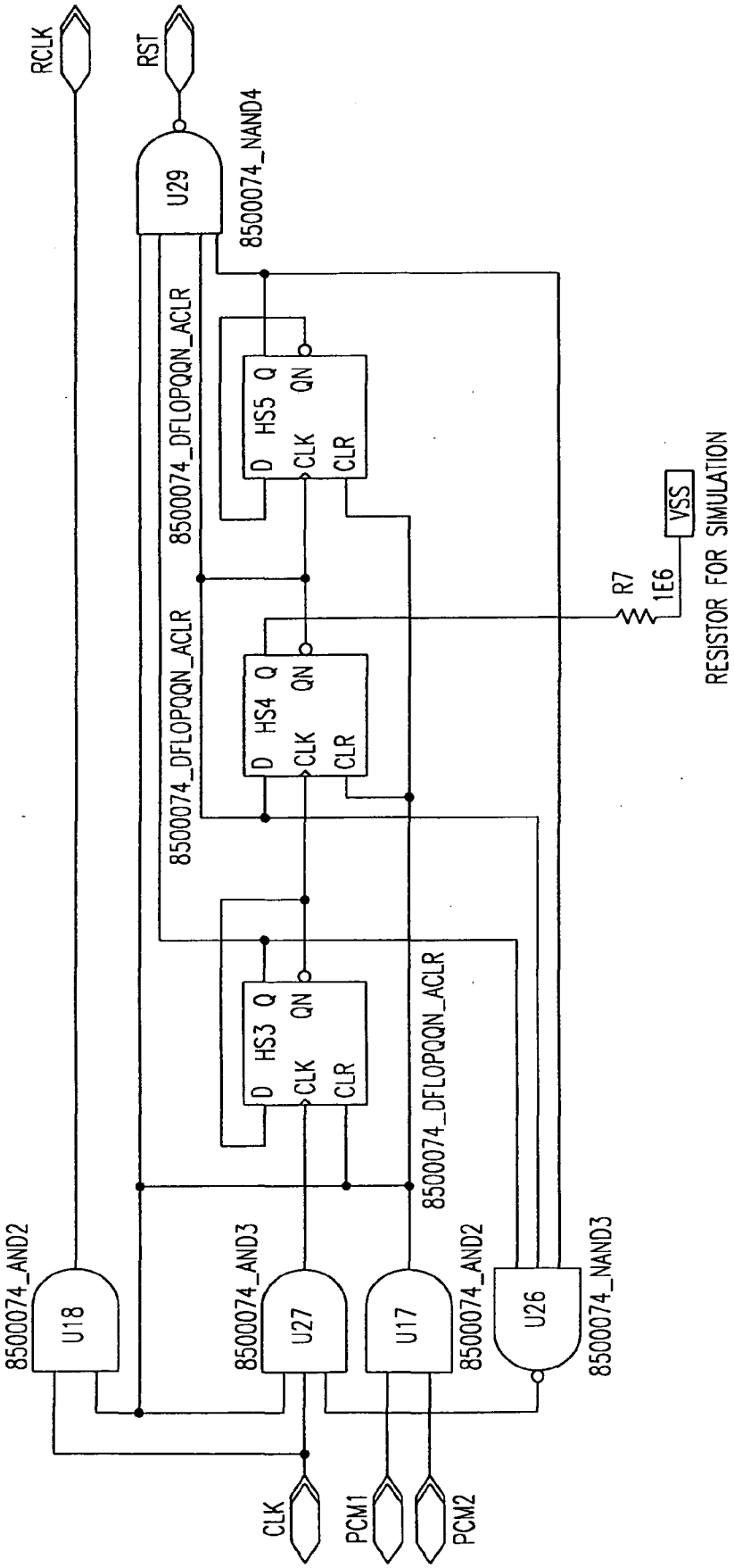
RCLK
RST
U29
8500074_NAND4
8500074_DFLOPQQN_ACLR
D HS5 Q
QN
CLK
CLR
8500074_DFLOPQQN_ACLR
D HS4 Q
QN
CLK
CLR
D HS3 Q
QN
CLK
CLR
8500074_DFLOPQQN_ACLR
R7
1E6
VSS
RESISTOR FOR SIMULATION
8500074_AND2
U18
8500074_AND3
U27
U17
8500074_AND2
U26
8500074_NAND3
CLK
PCM1
PCM2

FIG.104

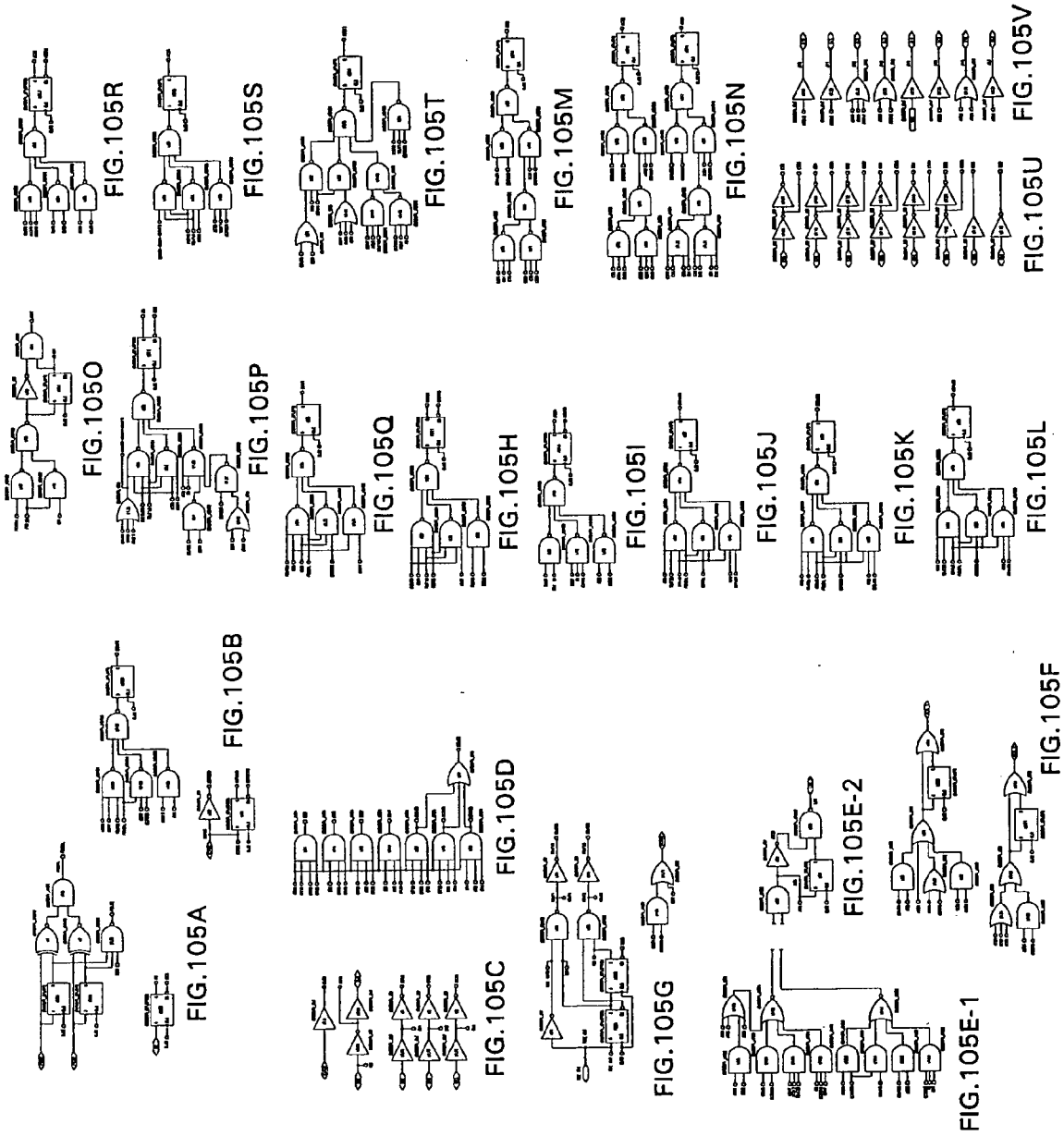
FIG.105A
FIG.105B
FIG.105C
FIG.105D
FIG.105E-1
FIG.105E-2
FIG.105F
FIG.105G
FIG.105H
FIG.105I
FIG.105J
FIG.105K
FIG.105L
FIG.105M
FIG.105N
FIG.105O
FIG.105P
FIG.105Q
FIG.105R
FIG.105S
FIG.105T
FIG.105U
FIG.105V

FIG.105

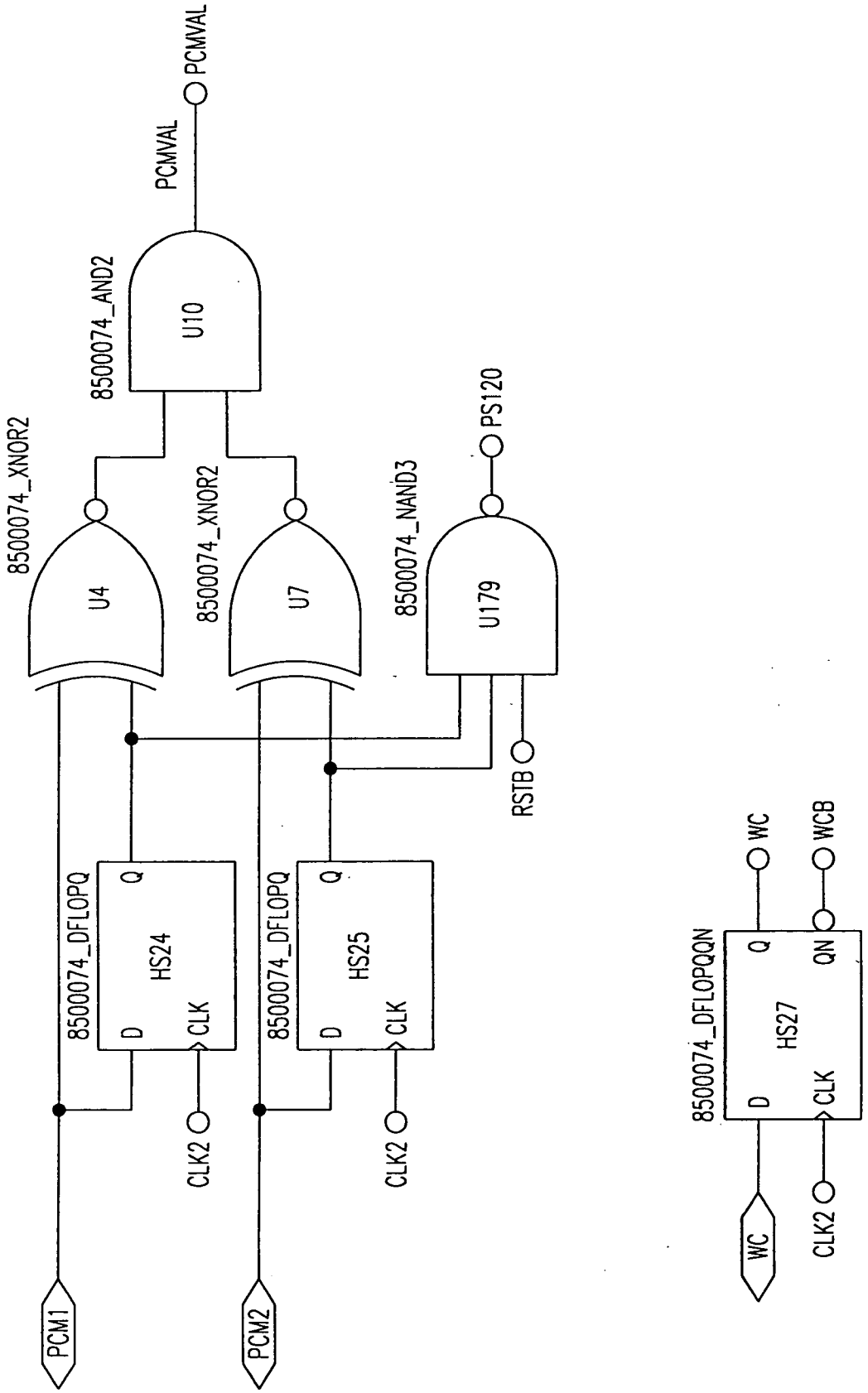
PCMVAL
PCMVAL
8500074_AND2
U10
8500074_XNOR2
U4
8500074_XNOR2
U7
8500074_NAND3
U179
PS120
RSTB
8500074_DFLOPQ
HS24
D
Q
CLK
8500074_DFLOPQ
HS25
D
Q
CLK
CLK2
CLK2
PCM1
PCM2
8500074_DFLOPQQN
HS27
D
Q
QN
CLK
WC
WCB
WC
CLK2

FIG. 105A

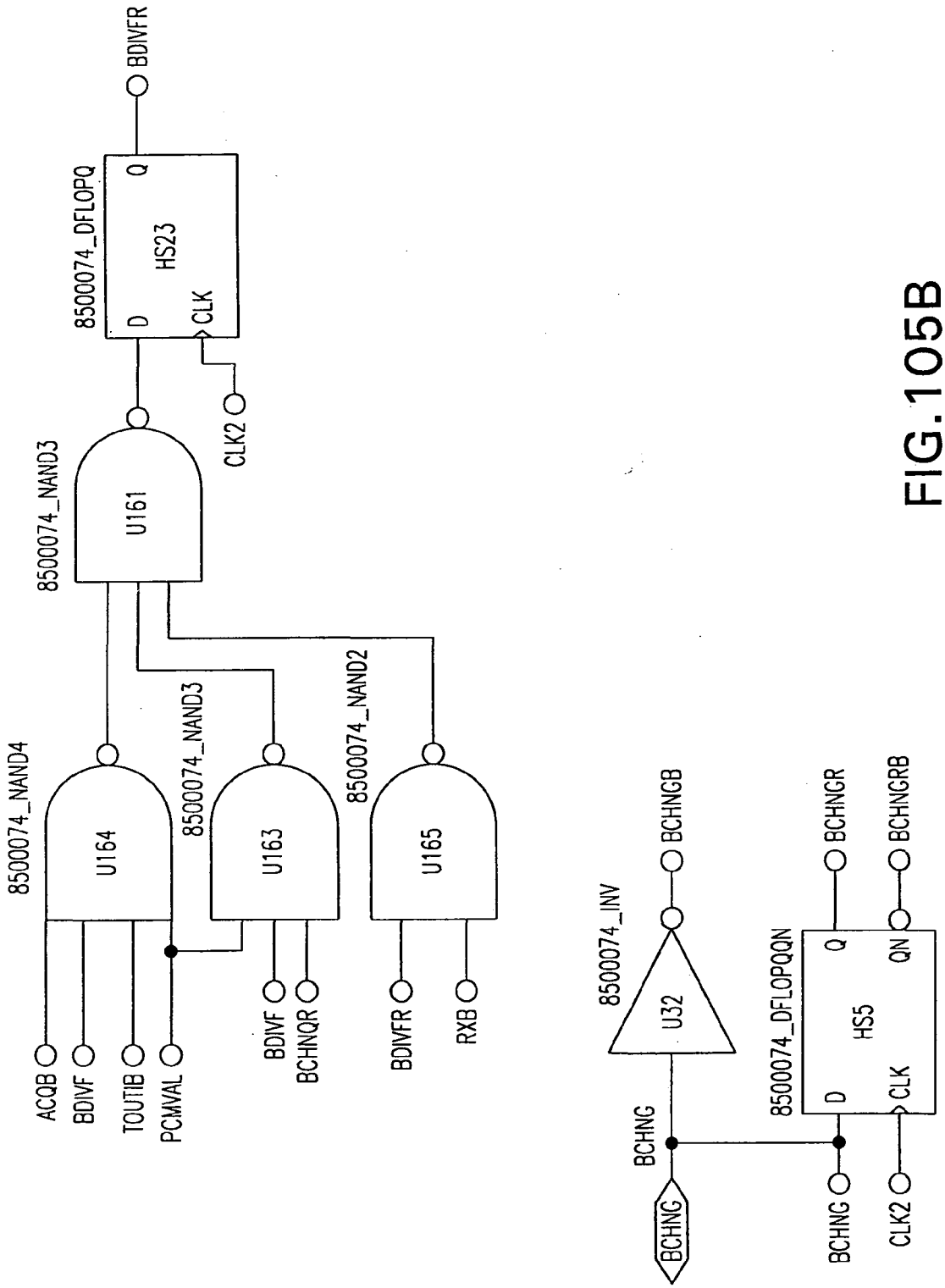
8500074_DFLOPQ
HS23
D
CLK
Q
BDIVFR
CLK2
8500074_NAND3
U161
8500074_NAND4
U164
8500074_NAND3
U163
8500074_NAND2
U165
ACQB
BDIVF
TOUTIB
PCMVAL
BDIVF
BCHNQR
BDIVFR
RXB
8500074_INV
U32
BCHNGB
BCHNG
BCHNG
8500074_DFLOPQQN
HS5
D
CLK
Q
QN
BCHNGR
BCHNGRB
BCHNG
CLK2

FIG. 105B

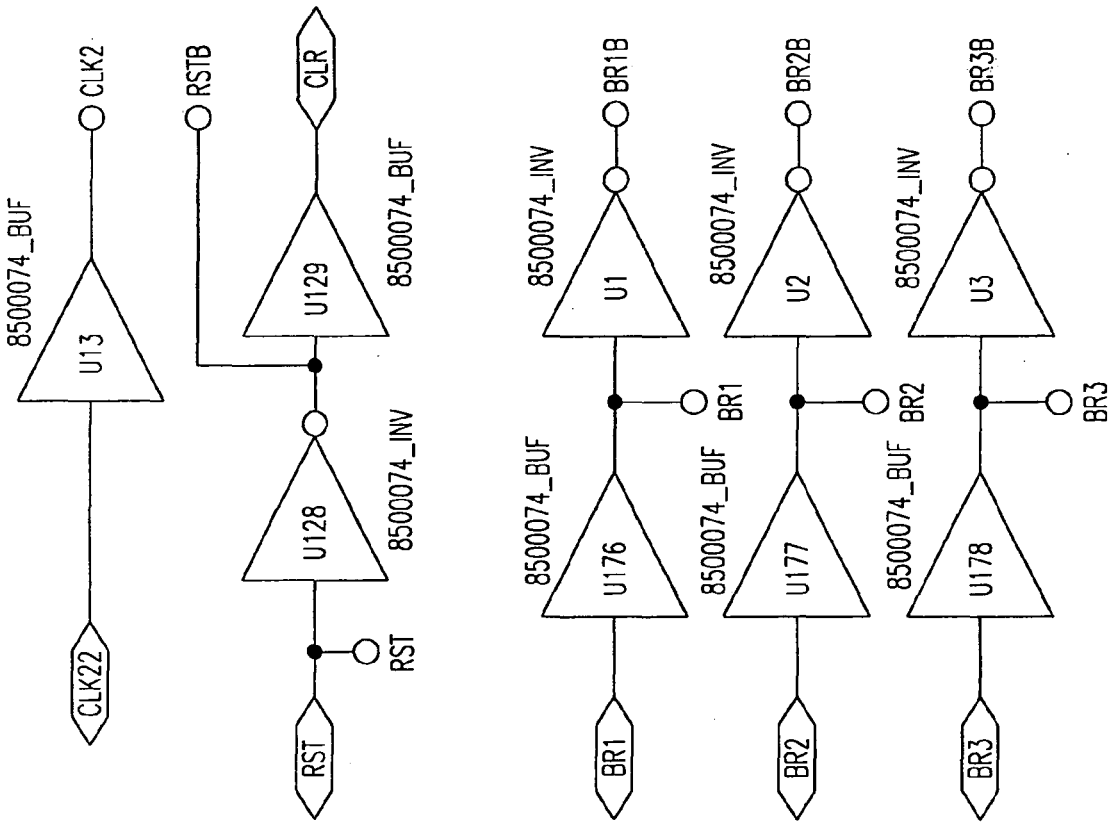
8500074_BUF
U13
CLK2
CLK22
RSTB
U128
8500074_INV
U129
8500074_BUF
CLR
RST
RST
8500074_INV
U1
BR1B
8500074_BUF
U176
BR1
BR1
8500074_INV
U2
BR2B
8500074_BUF
U177
BR2
BR2
8500074_INV
U3
BR3B
8500074_BUF
U178
BR3
BR3

FIG. 105C

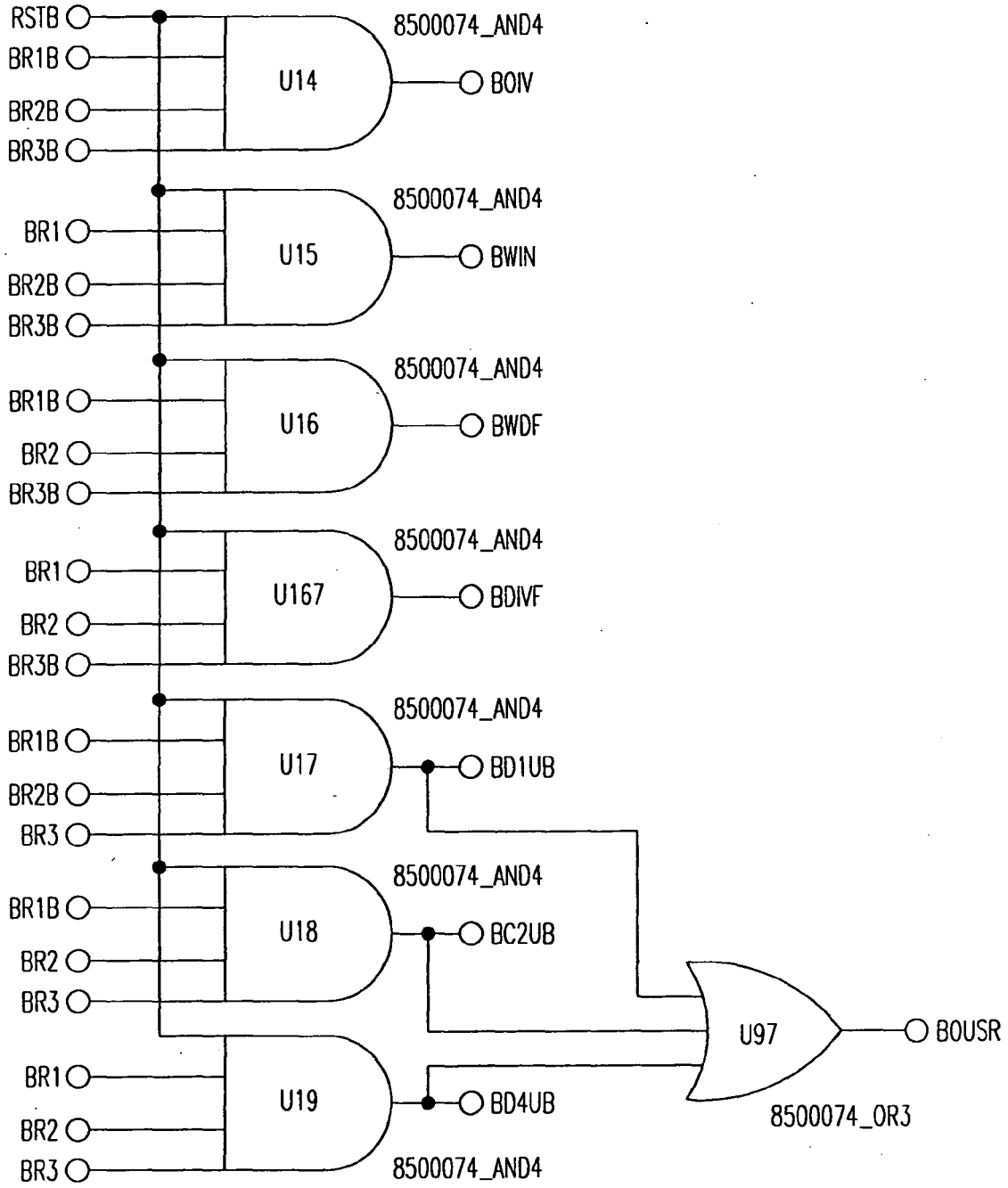
RSTB
BR1B
BR2B
BR3B
U14
8500074_AND4
BOIV
BR1
BR2B
BR3B
U15
8500074_AND4
BWIN
BR1B
BR2
BR3B
U16
8500074_AND4
BWDF
BR1
BR2
BR3B
U167
8500074_AND4
BDIVF
BR1B
BR2B
BR3
U17
8500074_AND4
BD1UB
BR1B
BR2
BR3
U18
8500074_AND4
BC2UB
BR1
BR2
BR3
U19
BD4UB
8500074_AND4
U97
BOUSR
8500074_OR3

FIG.105D

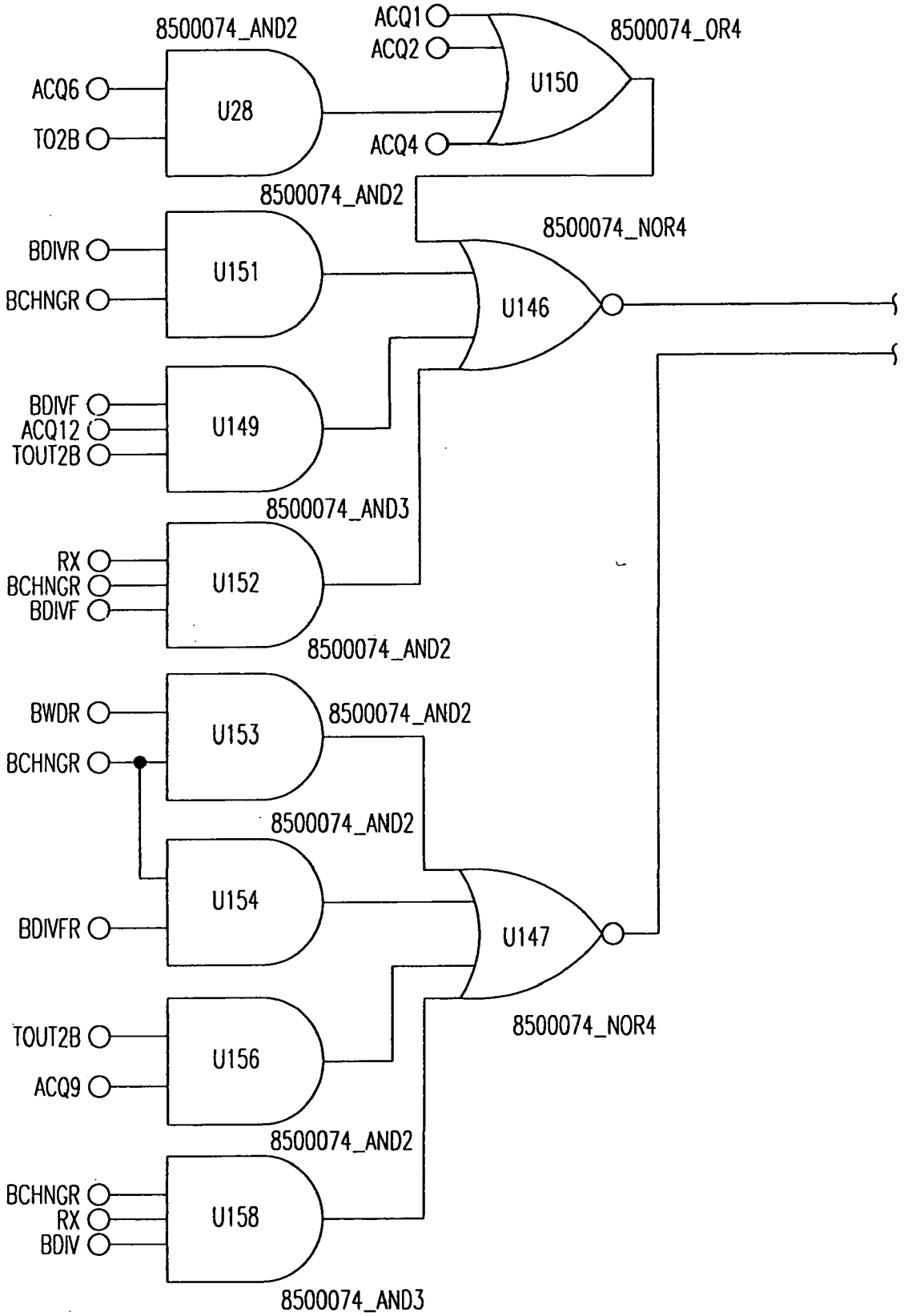
8500074_AND2
ACQ6
TO2B
U28
ACQ1
ACQ2
ACQ4
U150
8500074_OR4
8500074_AND2
BDIVR
BCHNGR
U151
8500074_NOR4
U146
BDIVF
ACQ12
TOUT2B
U149
8500074_AND3
RX
BCHNGR
BDIVF
U152
8500074_AND2
BWDR
BCHNGR
U153
8500074_AND2
8500074_AND2
U154
BDIVFR
U147
8500074_NOR4
TOUT2B
ACQ9
U156
8500074_AND2
BCHNGR
RX
BDIV
U158
8500074_AND3

FIG.105E-1

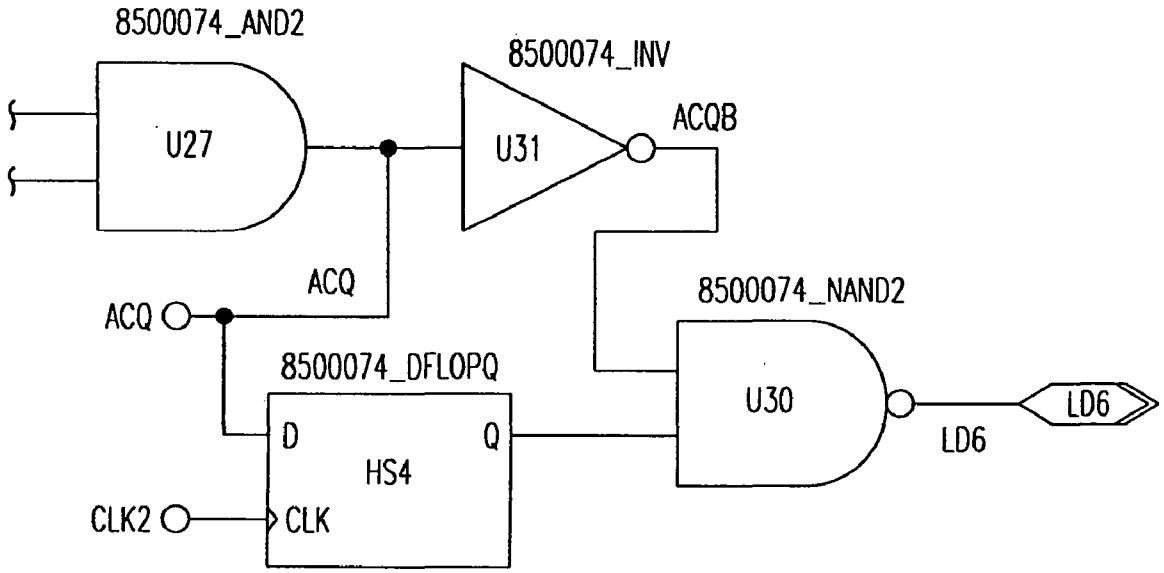
8500074_AND2
U27
8500074_INV
U31
ACQB
ACQ
ACQ
8500074_NAND2
U30
LD6
LD6
8500074_DFLOPQ
D
Q
HS4
CLK2
CLK

FIG.105E-2

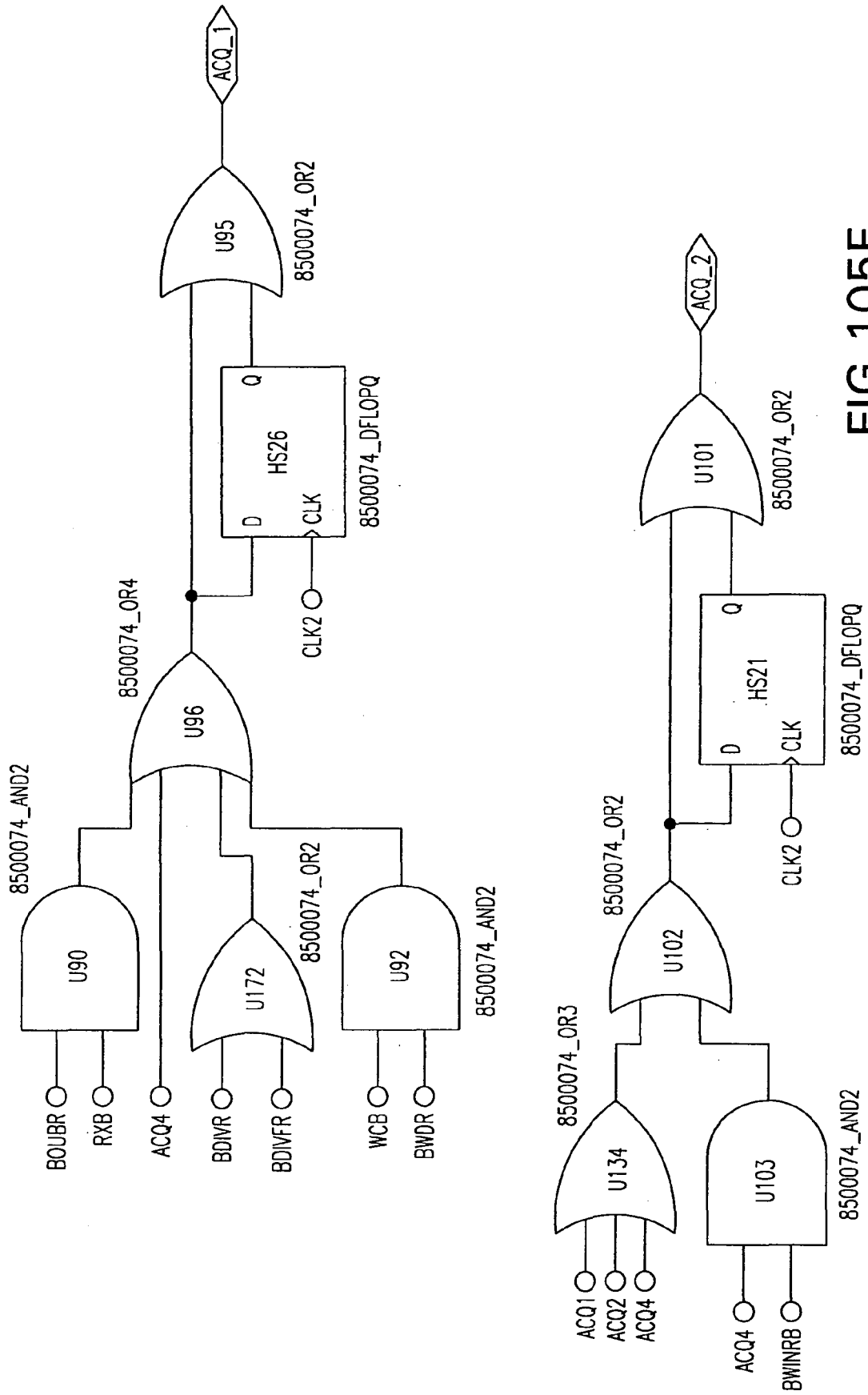
ACQ_1
U95
8500074_OR2
HS26
Q
D
CLK
8500074_DFLOPQ
CLK2
8500074_OR4
U96
8500074_AND2
U90
BOUBR
RXB
ACQ4
U172
8500074_OR2
BDIVR
BDIVFR
U92
8500074_AND2
WCB
BWDR
ACQ_2
U101
8500074_OR2
HS21
Q
D
CLK
8500074_DFLOPQ
CLK2
8500074_OR2
U102
8500074_OR3
U134
ACQ1
ACQ2
ACQ4
U103
8500074_AND2
ACQ4
BWINRB

FIG. 105F

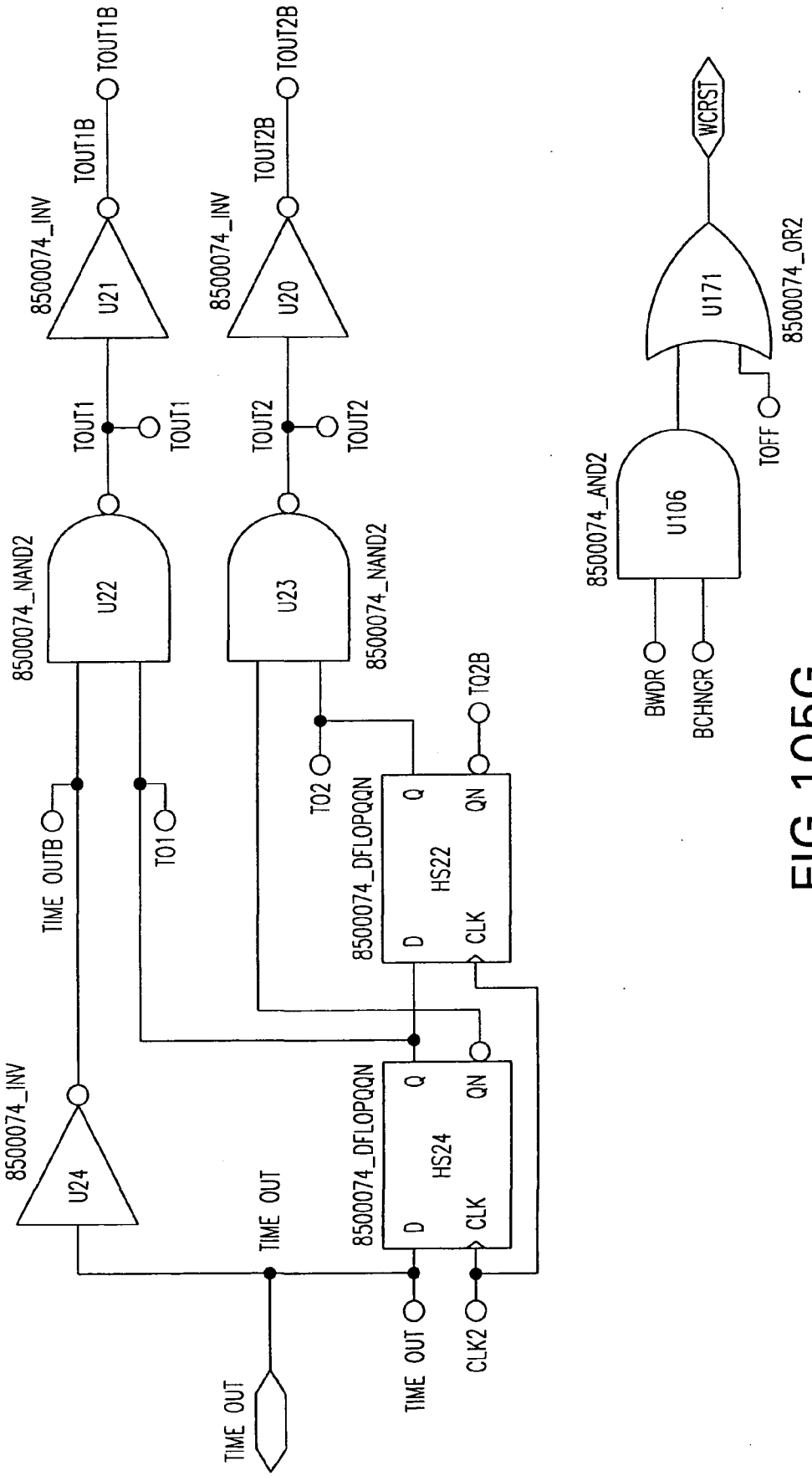
8500074_INV
U21
TOUT1B
TOUT1B
8500074_INV
U20
TOUT2B
TOUT2B
TOUT1
TOUT1
TOUT2
TOUT2
8500074_NAND2
U22
8500074_NAND2
U23
TIME OUTB
T01
T02
TQ2B
8500074_DFLOPQQN
HS22
D
Q
CLK
QN
8500074_INV
U24
TIME OUT
8500074_DFLOPQQN
HS24
D
Q
CLK
QN
TIME OUT
TIME OUT
CLK2
WCRST
U171
8500074_OR2
TOFF
8500074_AND2
U106
BWDR
BCHNGR

FIG.105G

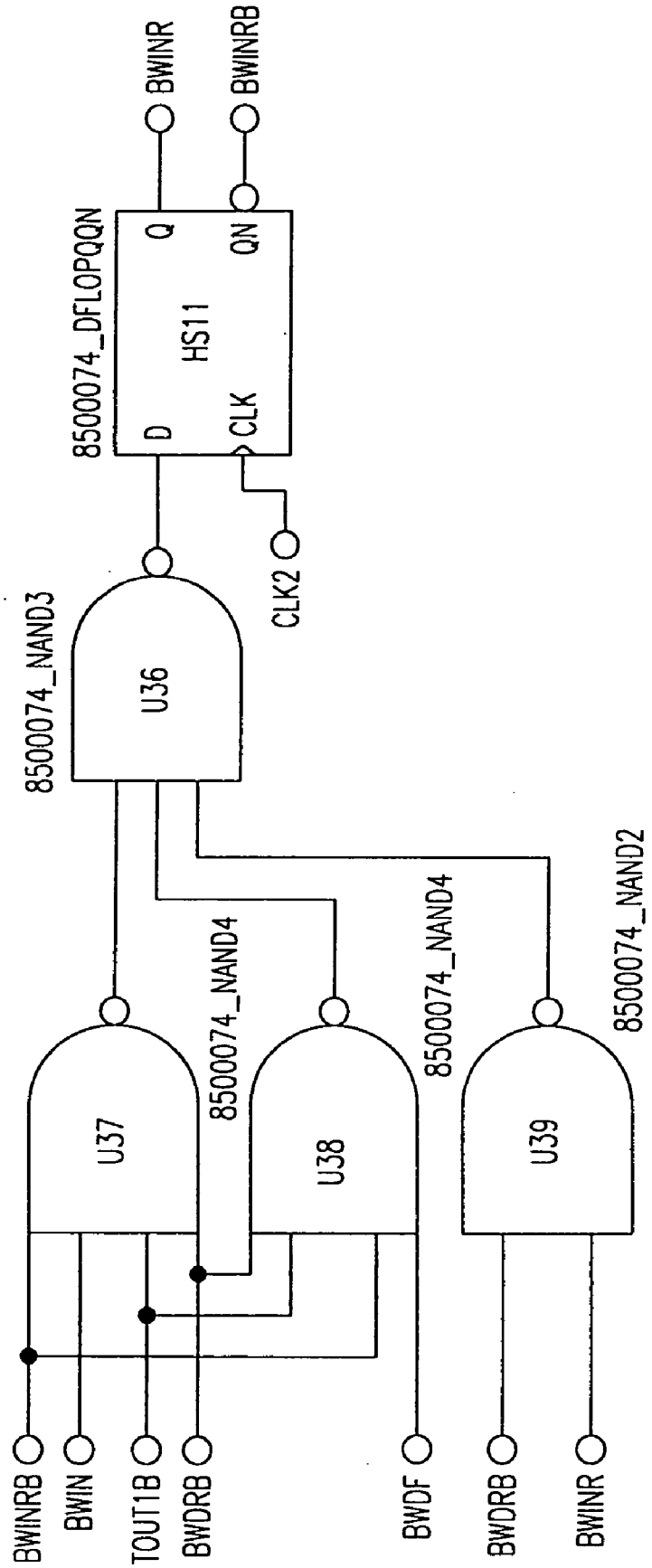
BWINR
BWINRB
8500074_DFLOPQQN
Q
QN
HS11
D
CLK
CLK2
8500074_NAND3
U36
8500074_NAND4
8500074_NAND4
8500074_NAND2
U37
U38
U39
BWINRB
BWIN
TOUT1B
BWDRB
BWDF
BWDRB
BWINR

FIG.105H

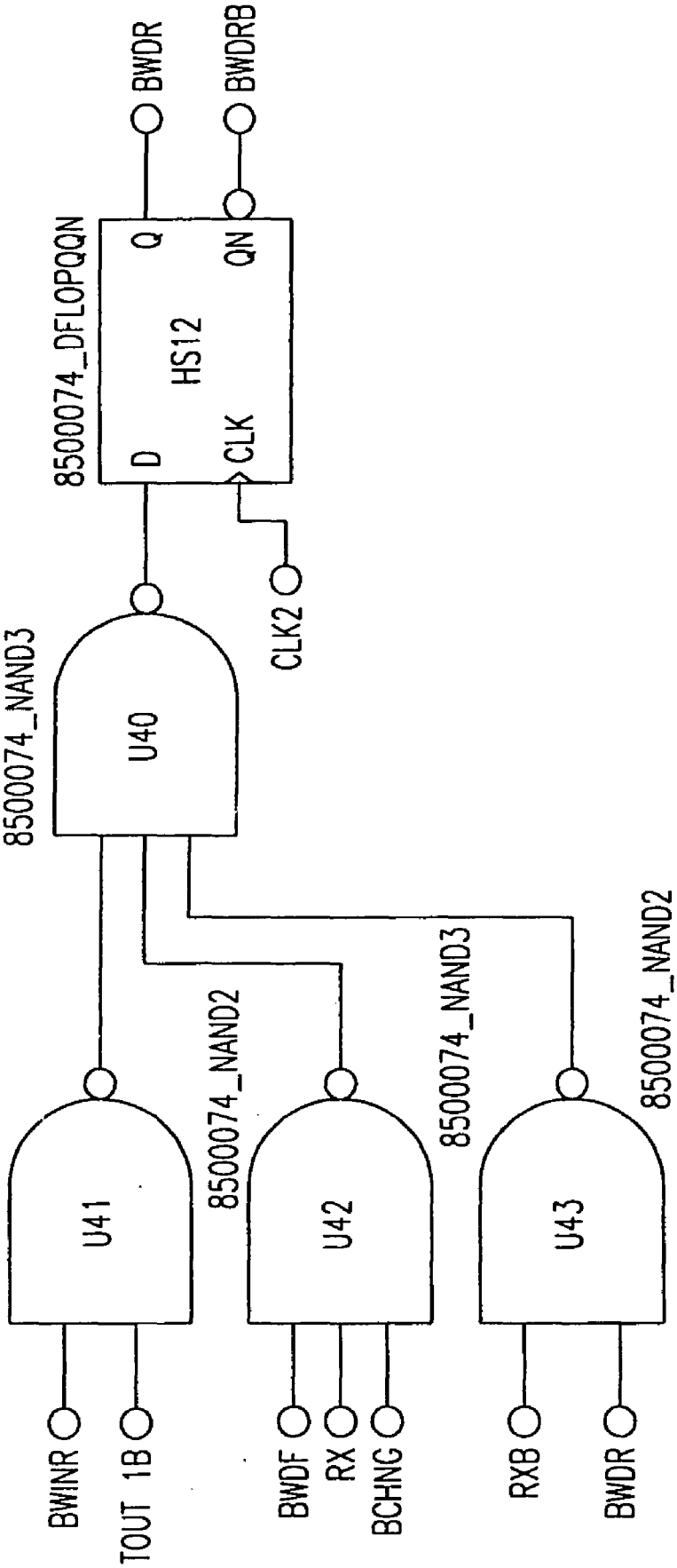
8500074_DFLOPQQN
HS12
D
CLK
Q
QN
BWDR
BWDRB
CLK2
8500074_NAND3
U40
8500074_NAND2
U41
U42
8500074_NAND3
U43
8500074_NAND2
BWINR
TOUT 1B
BWDF
RX
BCHNG
RXB
BWDR

FIG. 105I

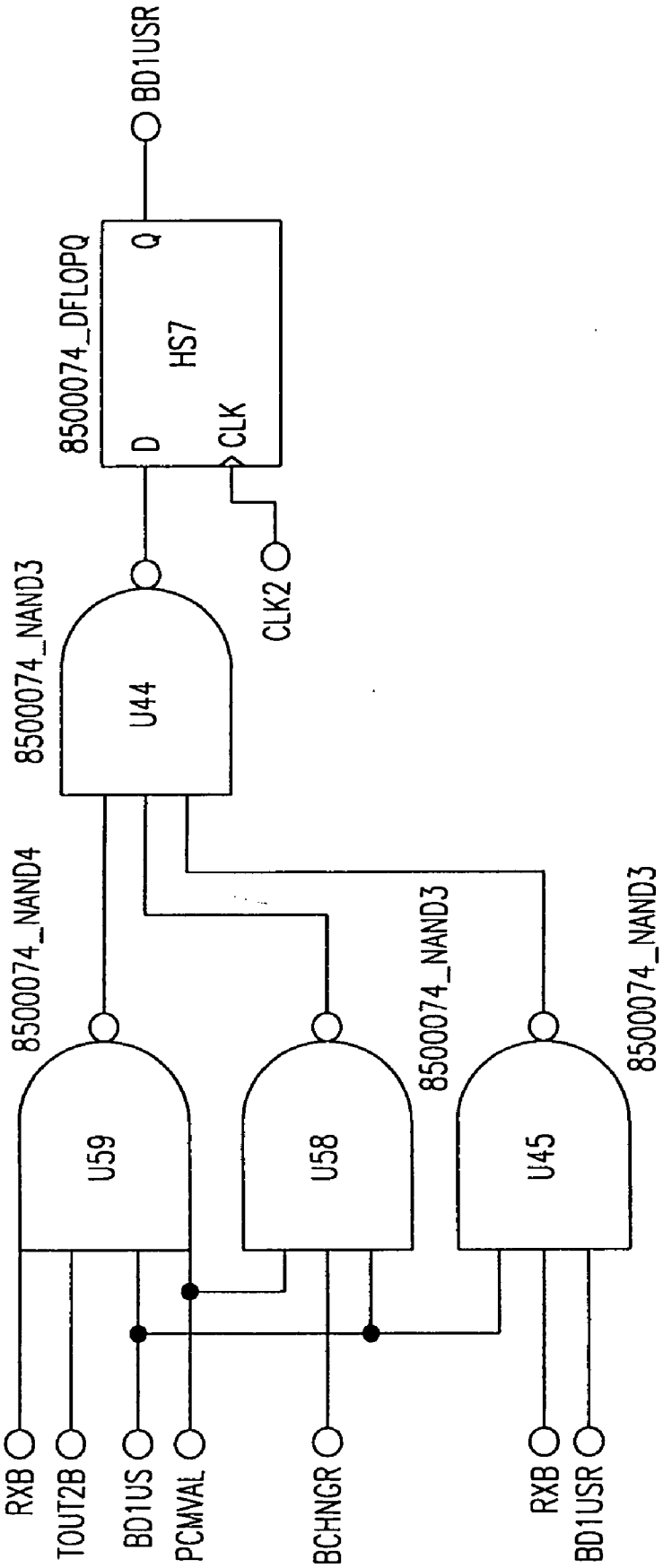
BD1USR
8500074_DFLOPQ
HS7
Q
D
CLK
CLK2
8500074_NAND3
U44
8500074_NAND4
U59
U58
8500074_NAND3
U45
8500074_NAND3
RXB
TOUT2B
BD1US
PCMVAL
BCHNGR
RXB
BD1USR

FIG. 105J

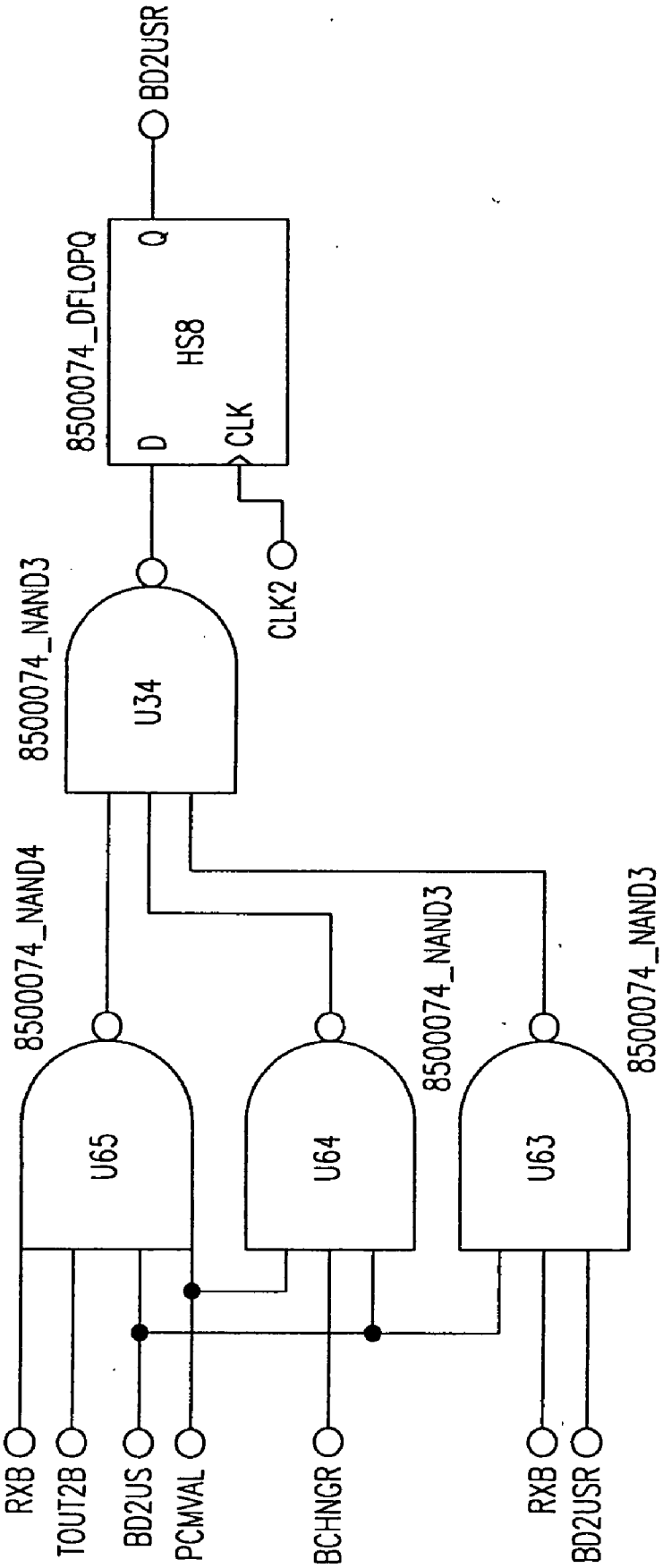
BD2USR
8500074_DFLOPQ
Q
HS8
D
CLK
CLK2
8500074_NAND3
U34
8500074_NAND4
U65
U64
8500074_NAND3
U63
8500074_NAND3
RXB
TOUT2B
BD2US
PCMVAL
BCHNGR
RXB
BD2USR

FIG.105K

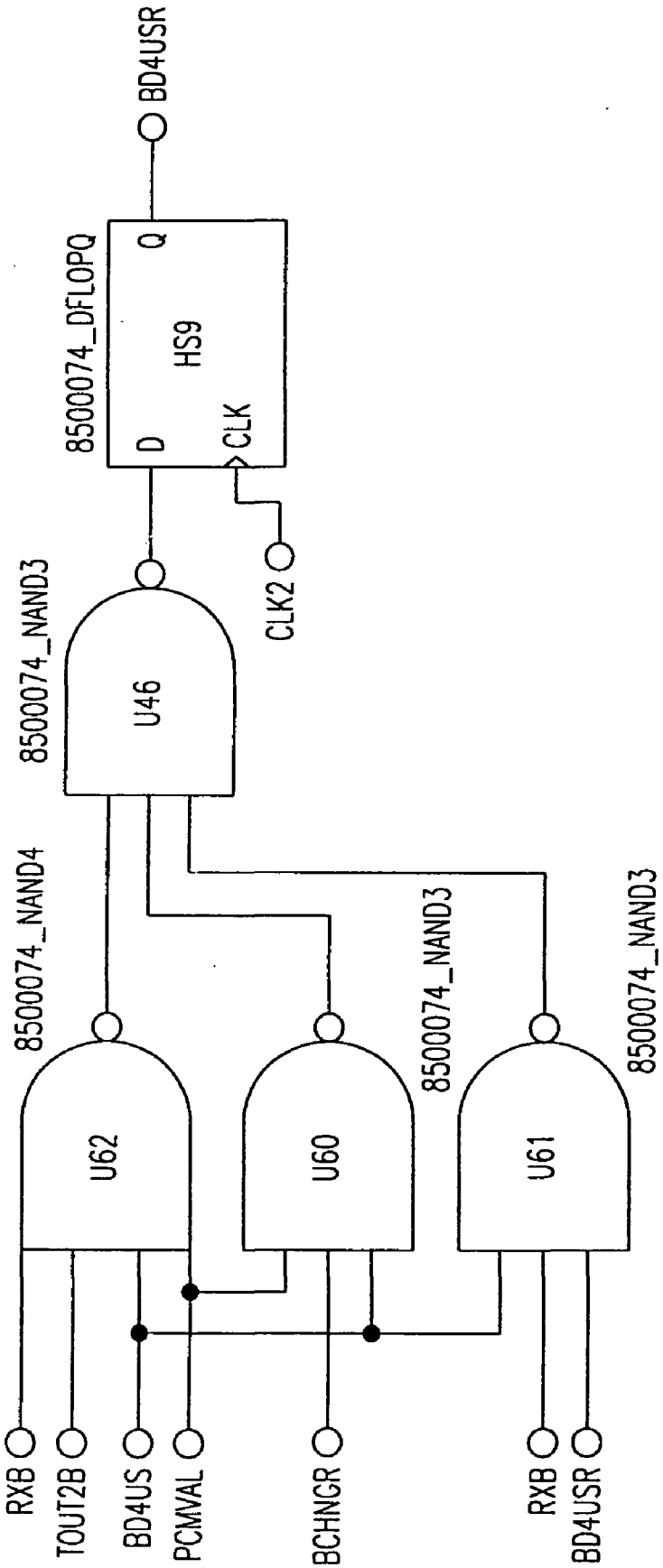
BD4USR
8500074_DFLOPQ
Q
HS9
D
CLK
CLK2
8500074_NAND3
U46
8500074_NAND4
U62
U60
8500074_NAND3
U61
8500074_NAND3
RXB
TOUT2B
BD4US
PCMVAL
BCHNGR
RXB
BD4USR

FIG. 105L

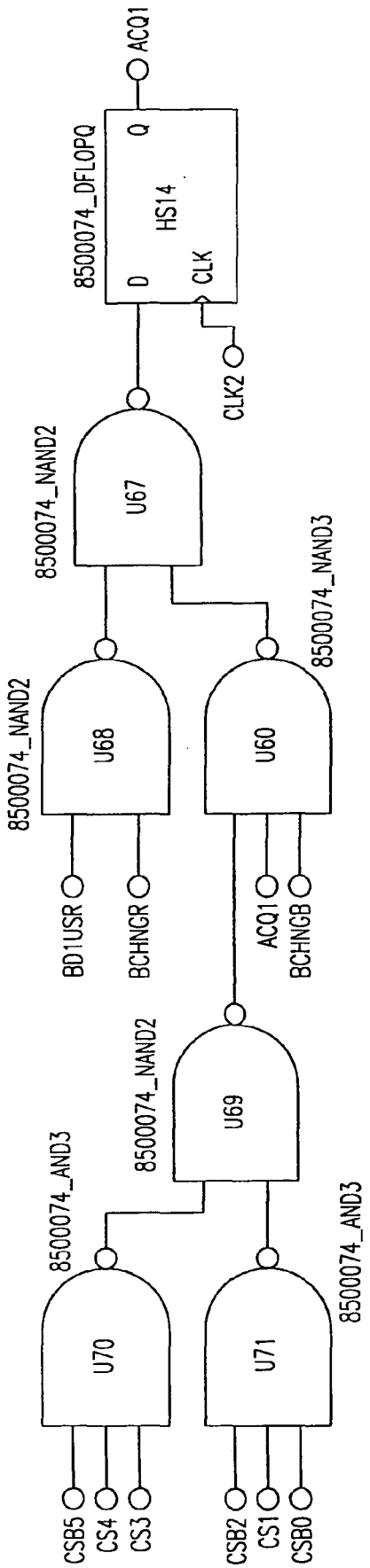
ACQ1
8500074_DFLOPQ
Q
HS14
D
CLK
CLK2
8500074_NAND2
U67
8500074_NAND2
U68
8500074_NAND3
U60
BD1USR
BCHNGR
ACQ1
BCHNGB
8500074_NAND2
U69
8500074_AND3
U70
8500074_AND3
U71
CSB5
CS4
CS3
CSB2
CS1
CSB0

FIG. 105M

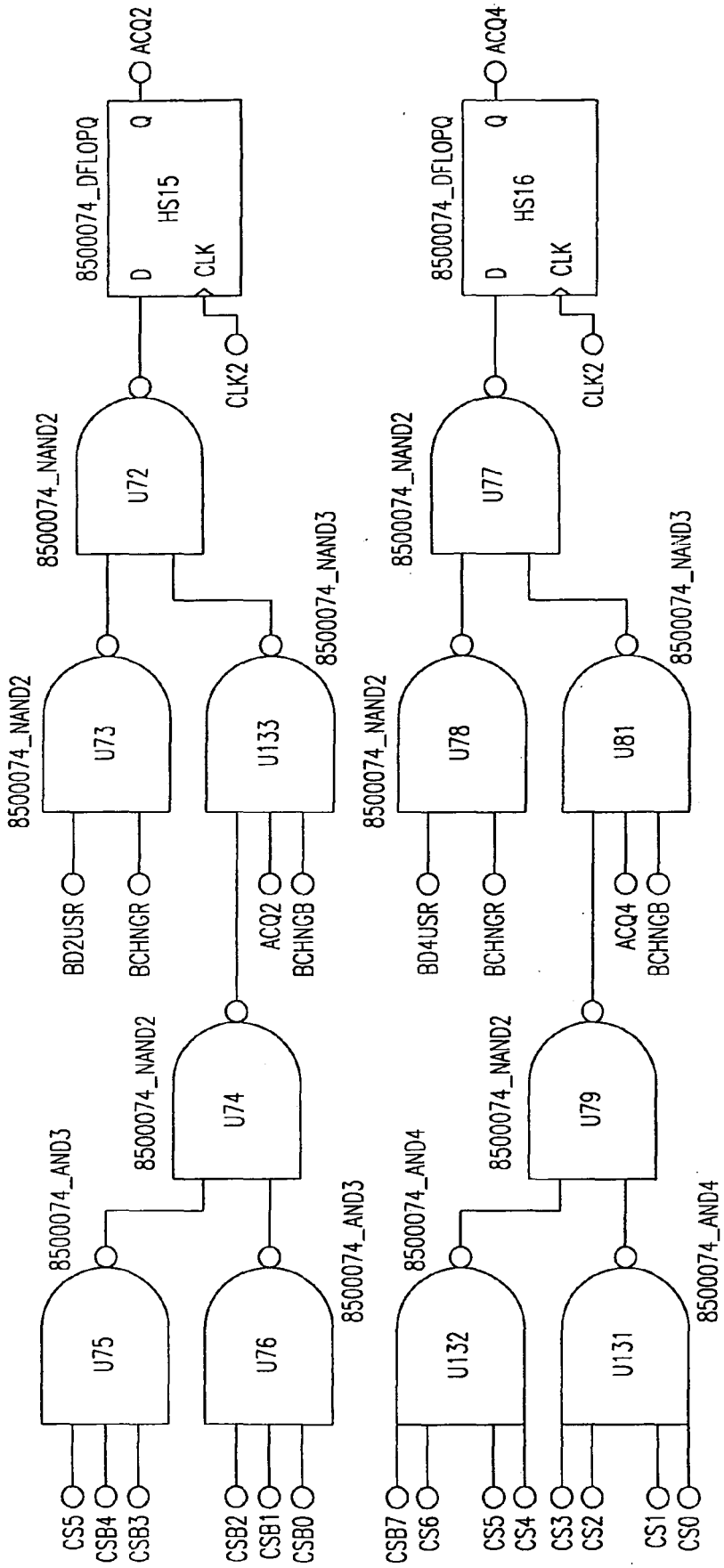
8500074_DFLOPQ
HS15
D
CLK
Q
ACQ2
CLK2
8500074_NAND2
U72
8500074_NAND2
U73
8500074_NAND3
U133
BD2USR
BCHNGR
ACQ2
BCHNGB
8500074_NAND2
U74
8500074_AND3
U75
8500074_AND3
U76
CS5
CSB4
CSB3
CSB2
CSB1
CSB0
8500074_DFLOPQ
HS16
D
CLK
Q
ACQ4
CLK2
8500074_NAND2
U77
8500074_NAND2
U78
8500074_NAND3
U81
BD4USR
BCHNGR
ACQ4
BCHNGB
8500074_NAND2
U79
8500074_AND4
U132
8500074_AND4
U131
CSB7
CS6
CS5
CS4
CS3
CS2
CS1
CS0

FIG.105N

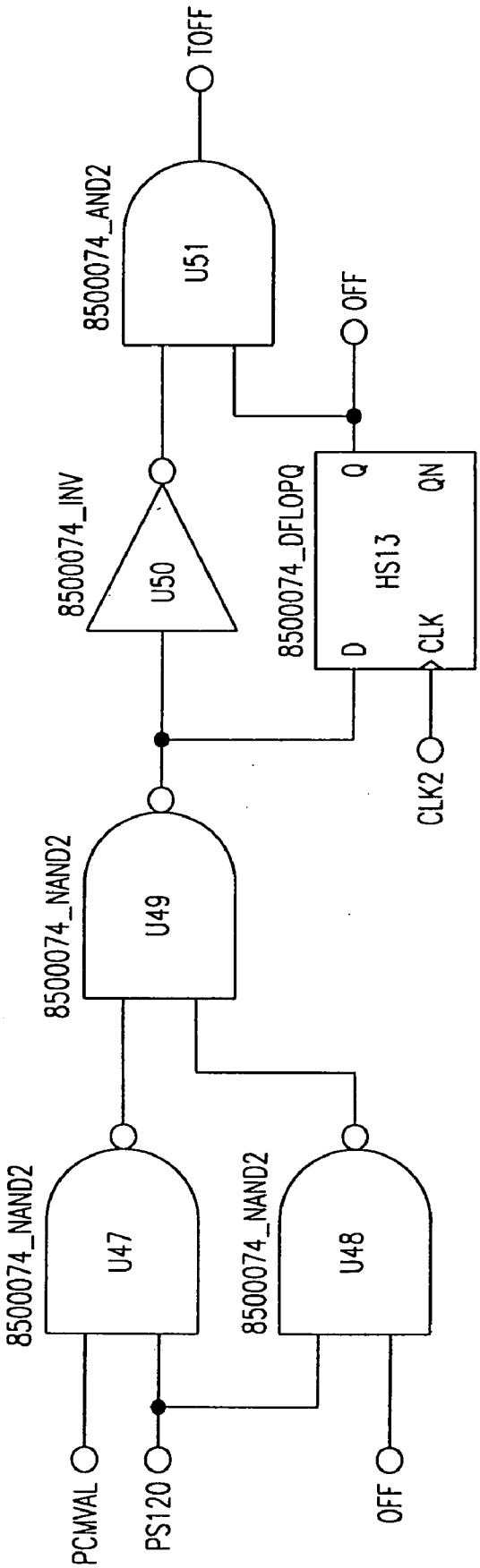
TOFF
8500074_AND2
U51
OFF
8500074_INV
U50
8500074_DFLOPQ
HS13
Q
QN
D
CLK
CLK2
8500074_NAND2
U49
8500074_NAND2
U47
8500074_NAND2
U48
PCMVAL
PS120
OFF

FIG.105O

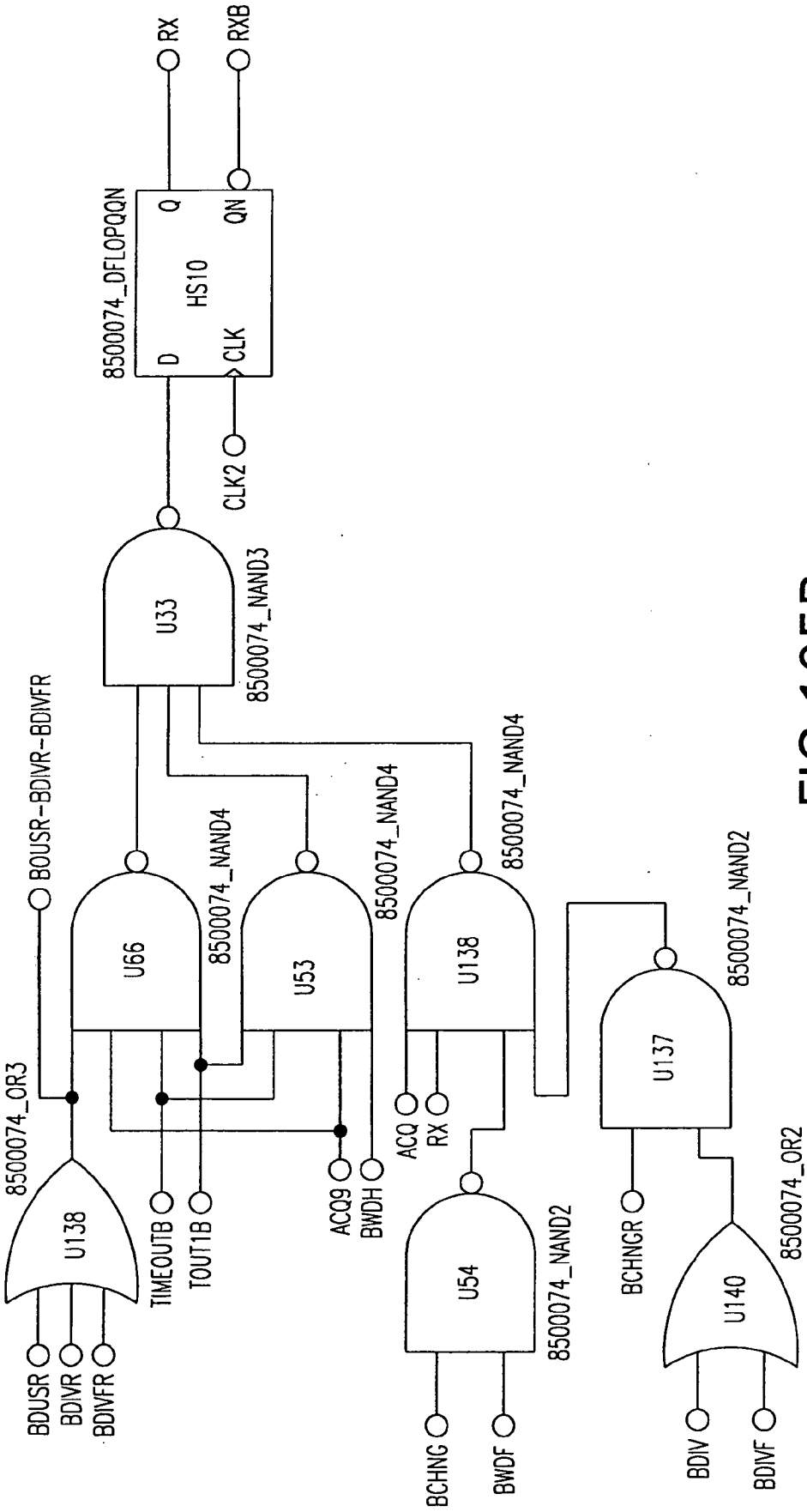
RX
RXB
8500074_DFLOPQQN
D
Q
HS10
CLK
QN
CLK2
U33
8500074_NAND3
BOUSR-BDIVR-BDIVFR
U66
8500074_NAND4
U53
8500074_NAND4
U138
8500074_NAND4
8500074_OR3
U138
BDUSR
BDIVR
BDIVFR
TIMEOUTB
TOUT1B
ACQ9
BWDH
ACQ
RX
U54
8500074_NAND2
BCHNG
BWDF
U137
8500074_NAND2
BCHNGR
U140
8500074_OR2
BDIV
BDIVF

FIG.105P

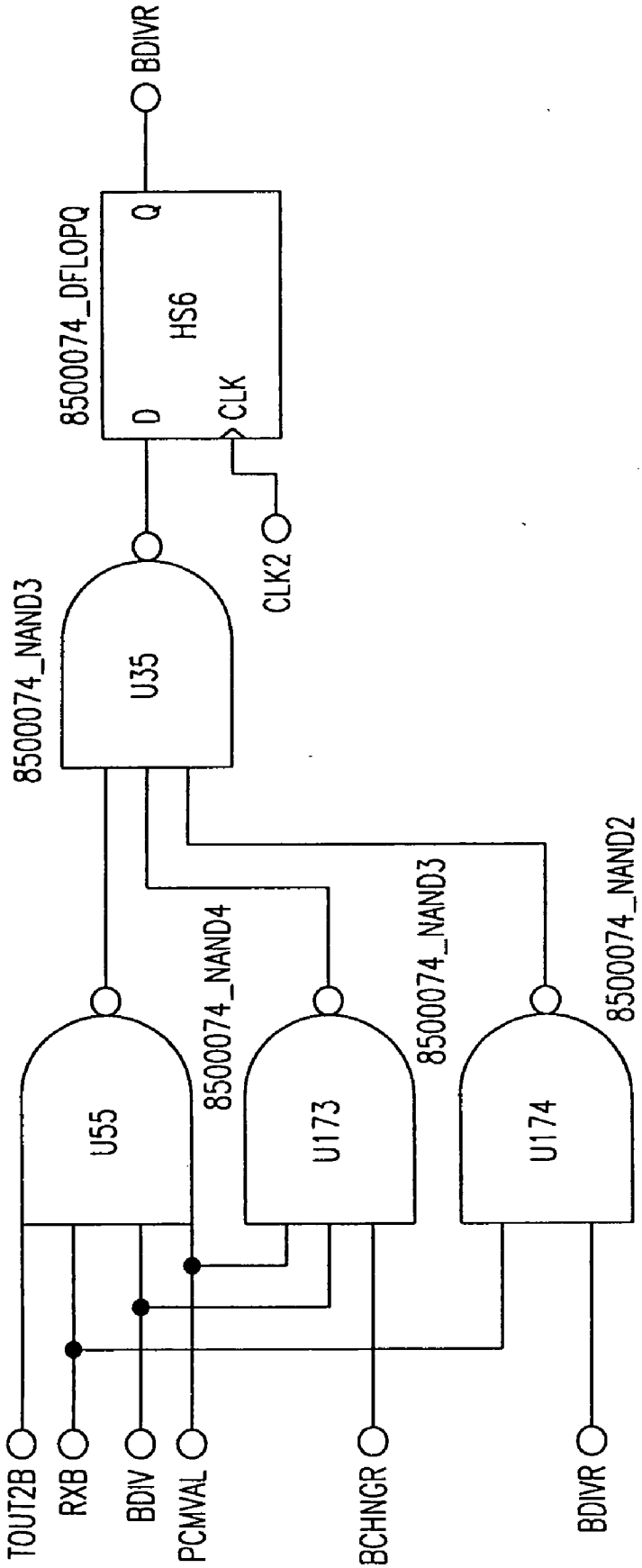
BDIVR
8500074_DFLOPQ
Q
HS6
D
CLK
CLK2
8500074_NAND3
U35
8500074_NAND4
8500074_NAND3
8500074_NAND2
U55
U173
U174
TOUT2B
RXB
BDIV
PCMVAL
BCHNGR
BDIVR

FIG.105Q

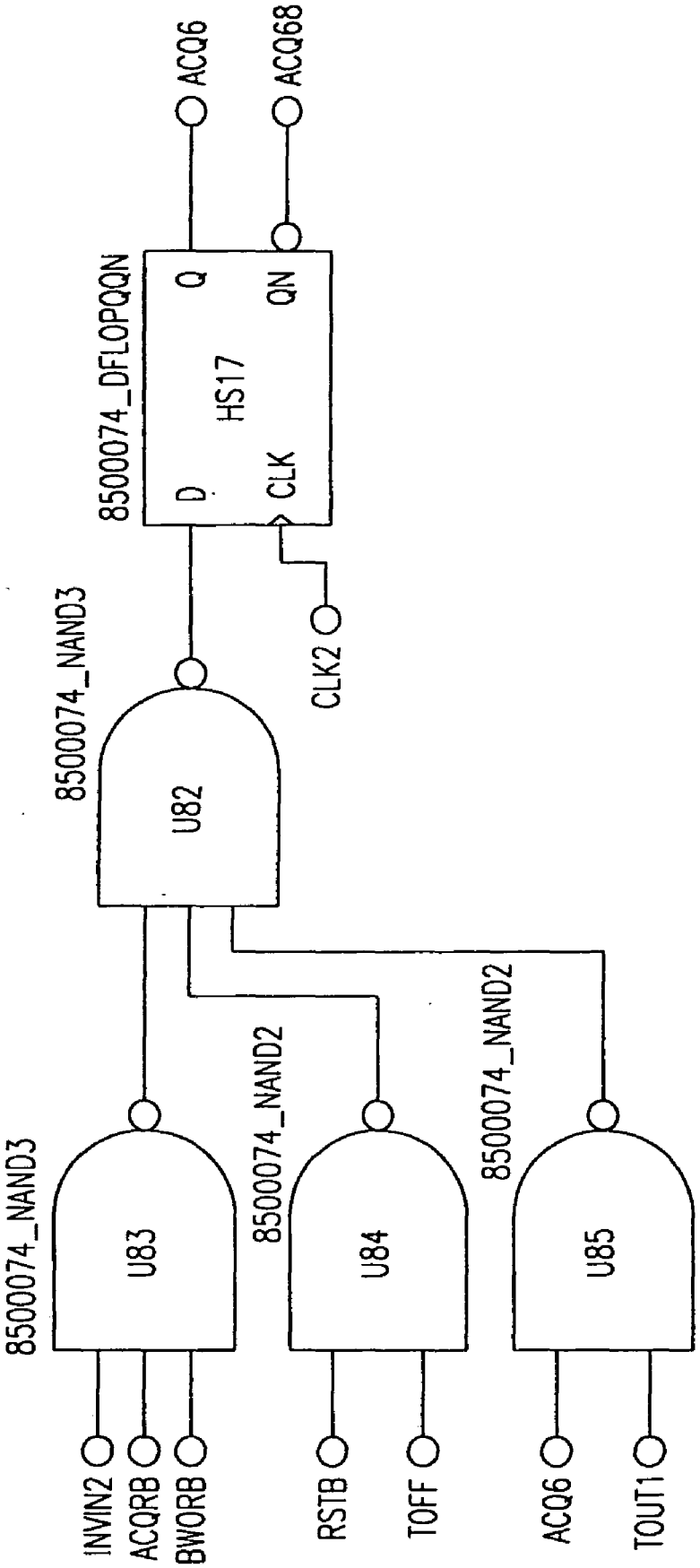
8500074_DFLOPQQN
HS17
D
CLK
Q
QN
ACQ6
ACQ68
CLK2
8500074_NAND3
U82
8500074_NAND3
U83
8500074_NAND2
U84
8500074_NAND2
U85
INVIN2
ACQRB
BWORB
RSTB
TOFF
ACQ6
TOUT1

FIG.105R

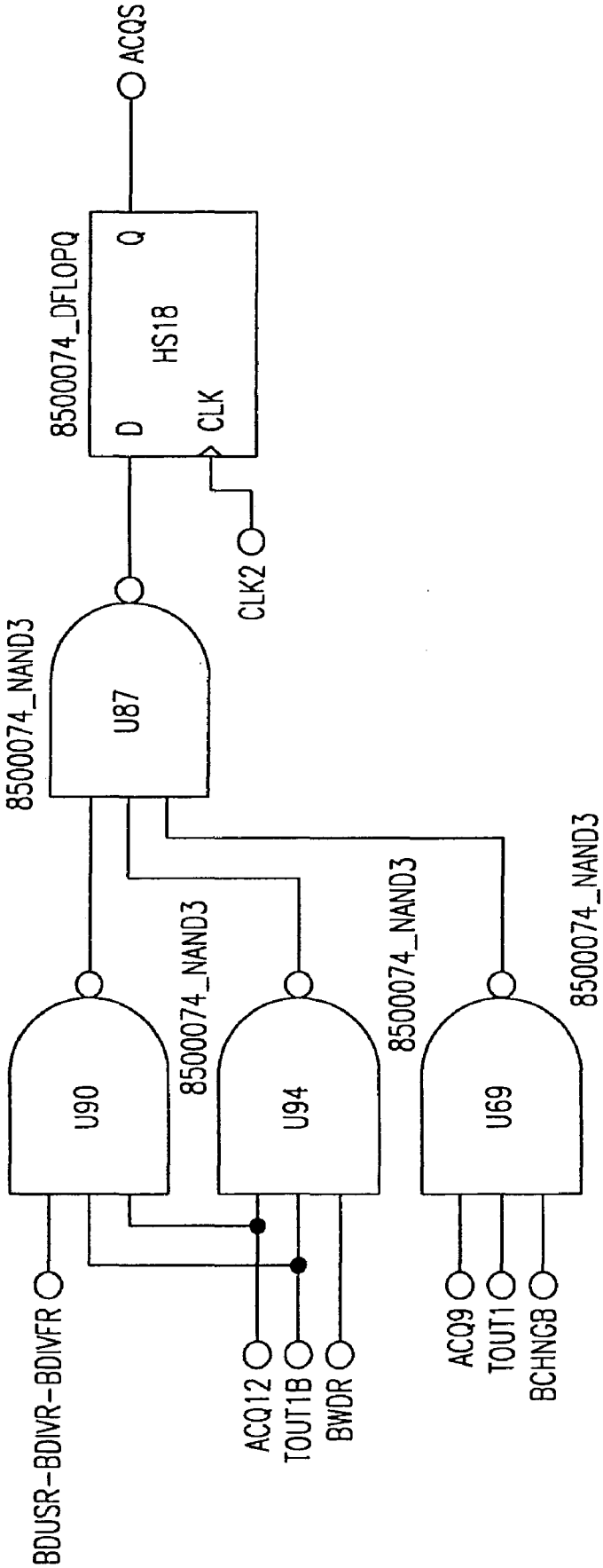
ACQS
8500074_DFLOPQ
D
HS18
Q
CLK
CLK2
8500074_NAND3
U87
8500074_NAND3
U90
8500074_NAND3
U94
8500074_NAND3
U69
BDUSR-BDIVR-BDIVFR
ACQ12
TOUT1B
BWDR
ACQ9
TOUT1
BCHNGB

FIG.105S

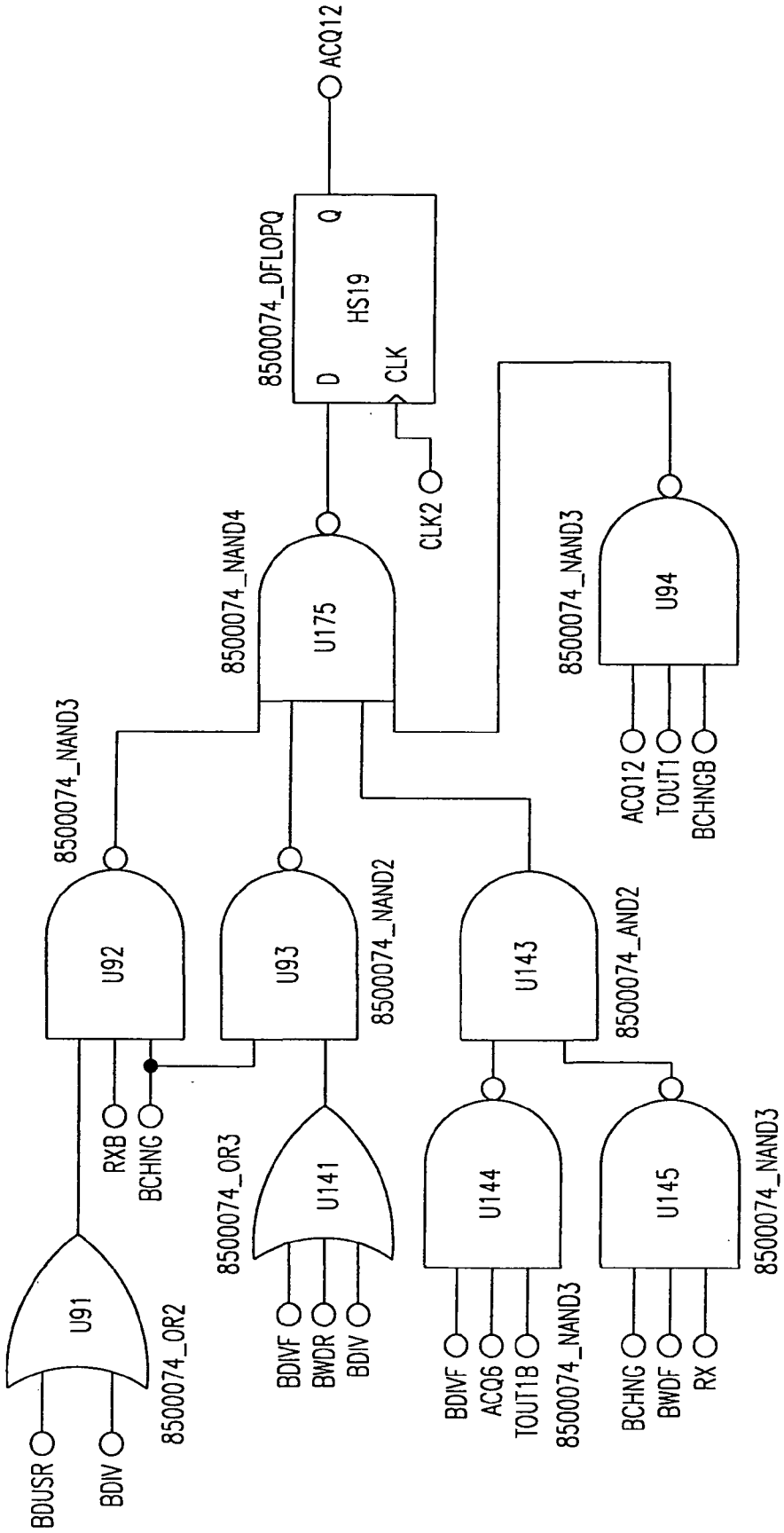
ACQ12
8500074_DFLOPQ
D
HS19
Q
CLK
CLK2
8500074_NAND4
U175
8500074_NAND3
U94
ACQ12
TOUT1
BCHNGB
8500074_NAND3
U92
RXB
BCHNG
8500074_NAND2
U93
8500074_AND2
U143
8500074_OR3
U141
BDIVF
BWDR
BDIV
U144
BDIVF
ACQ6
TOUT1B
8500074_NAND3
U145
BCHNG
BWDF
RX
8500074_NAND3
U91
BDUSR
BDIV
8500074_OR2

FIG.105T

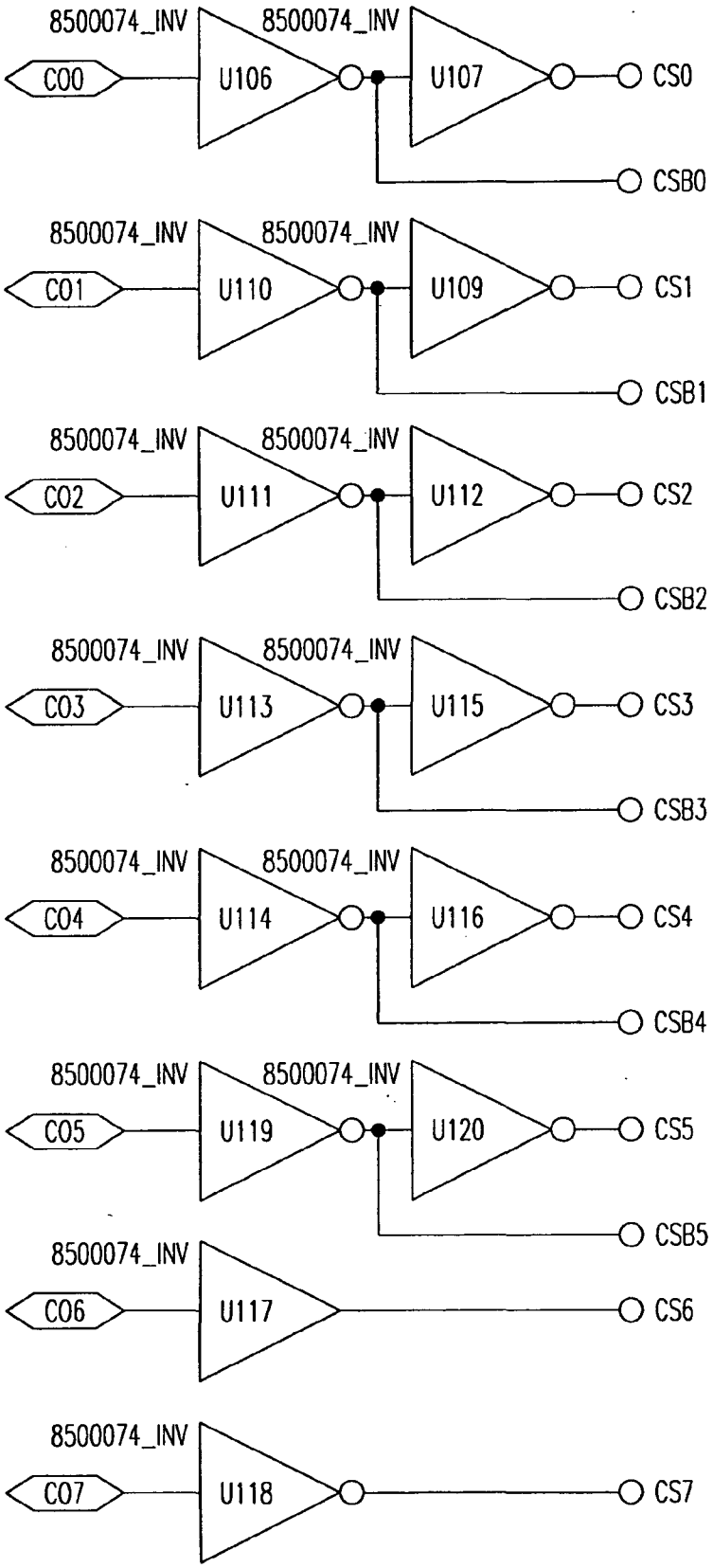
8500074_INV
8500074_INV
C00
U106
U107
CS0
CSB0
8500074_INV
8500074_INV
C01
U110
U109
CS1
CSB1
8500074_INV
8500074_INV
C02
U111
U112
CS2
CSB2
8500074_INV
8500074_INV
C03
U113
U115
CS3
CSB3
8500074_INV
8500074_INV
C04
U114
U116
CS4
CSB4
8500074_INV
8500074_INV
C05
U119
U120
CS5
CSB5
8500074_INV
C06
U117
CS6
8500074_INV
C07
U118
CS7

FIG.105U

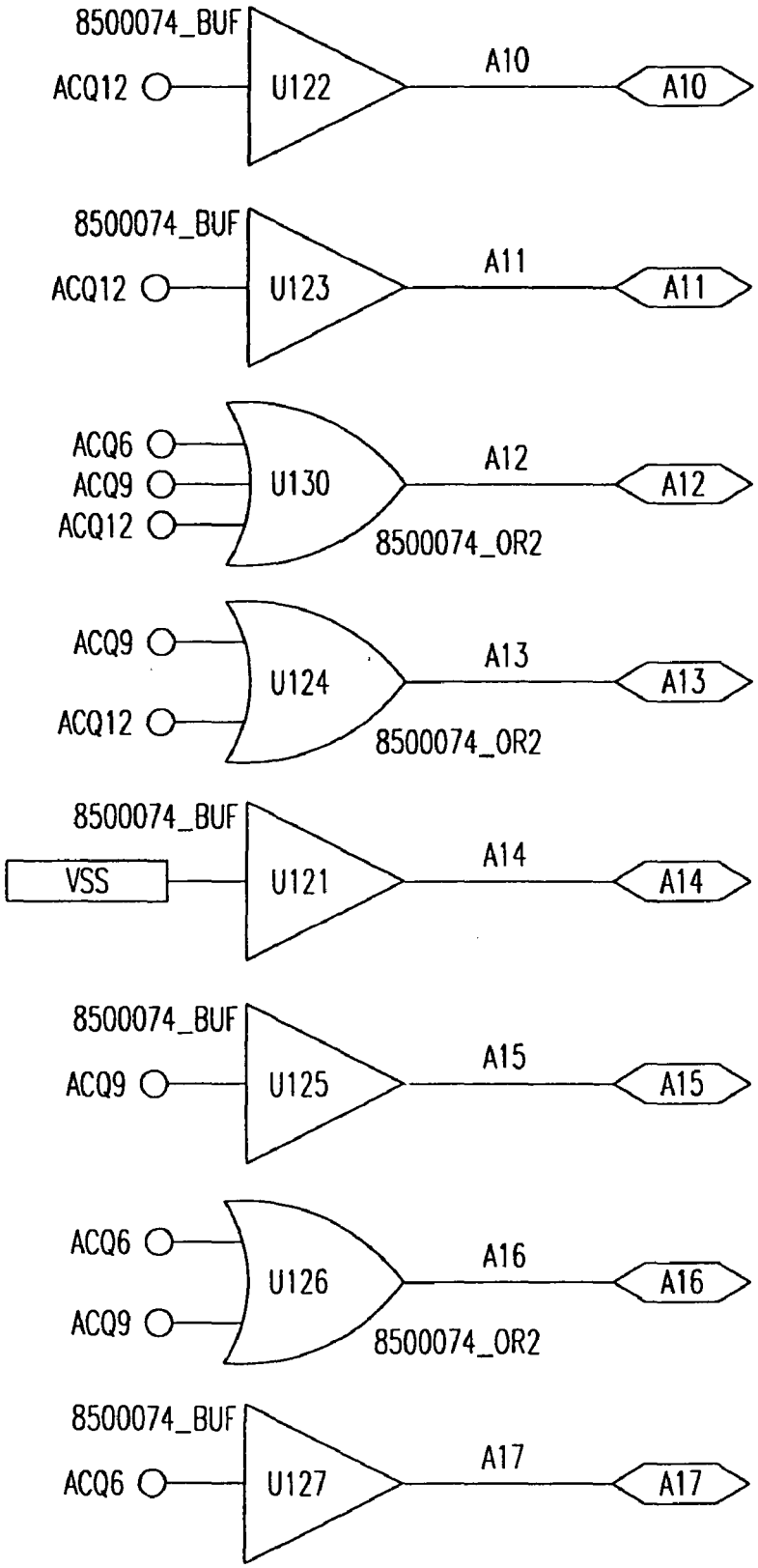
8500074_BUF
ACQ12
U122
A10
A10
8500074_BUF
ACQ12
U123
A11
A11
ACQ6
ACQ9
ACQ12
U130
A12
A12
8500074_OR2
ACQ9
ACQ12
U124
A13
A13
8500074_OR2
8500074_BUF
VSS
U121
A14
A14
8500074_BUF
ACQ9
U125
A15
A15
ACQ6
ACQ9
U126
A16
A16
8500074_OR2
8500074_BUF
ACQ6
U127
A17
A17

FIG.105V

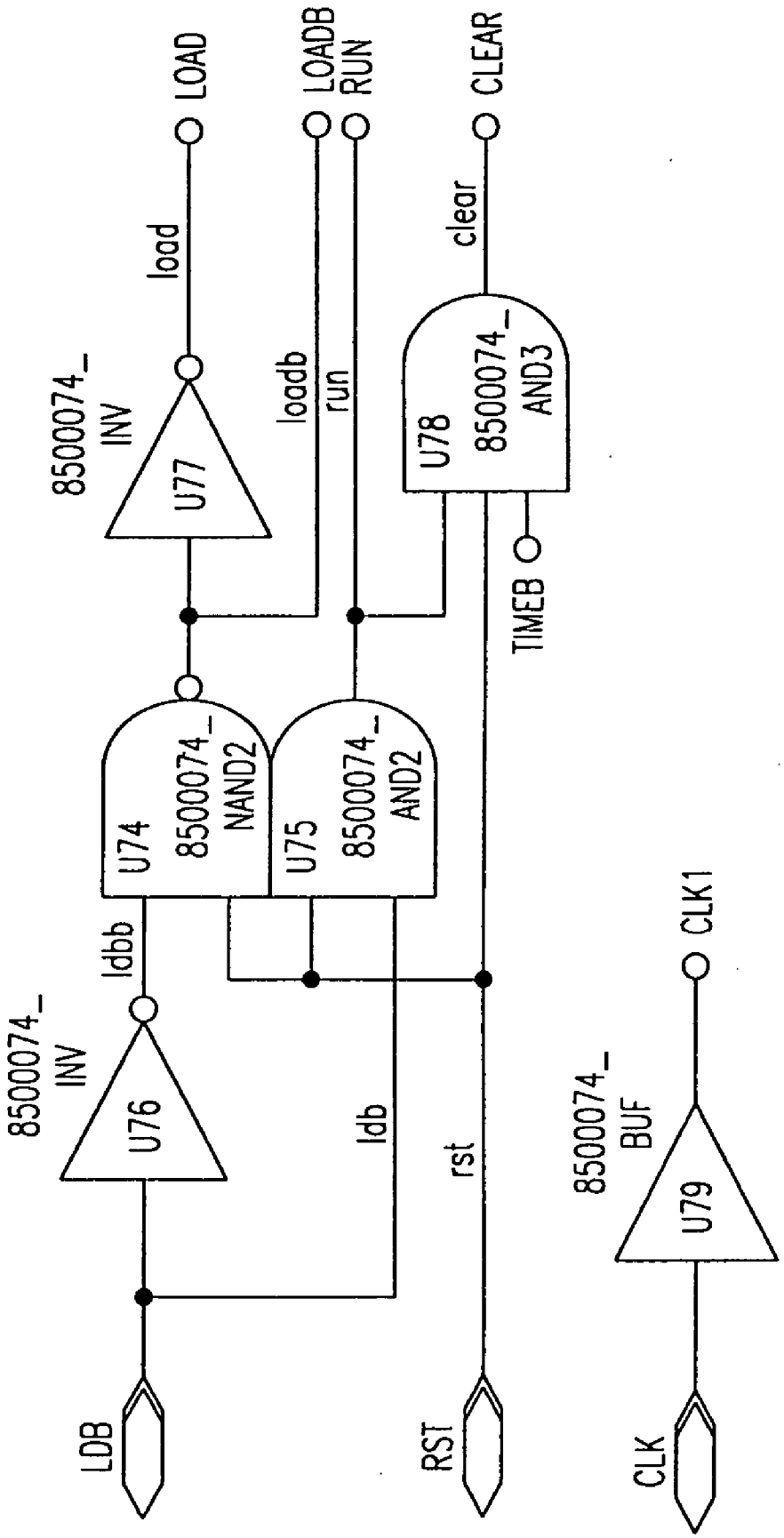
LOAD
LOADB
RUN
CLEAR
load
loadb
run
clear
8500074_
INV
U77
U78
8500074_
AND3
TIMEB
U74
8500074_
NAND2
U75
8500074_
AND2
ldbb
ldb
rst
8500074_
INV
U76
8500074_
BUF
U79
CLK1
LDB
RST
CLK

FIG.106A

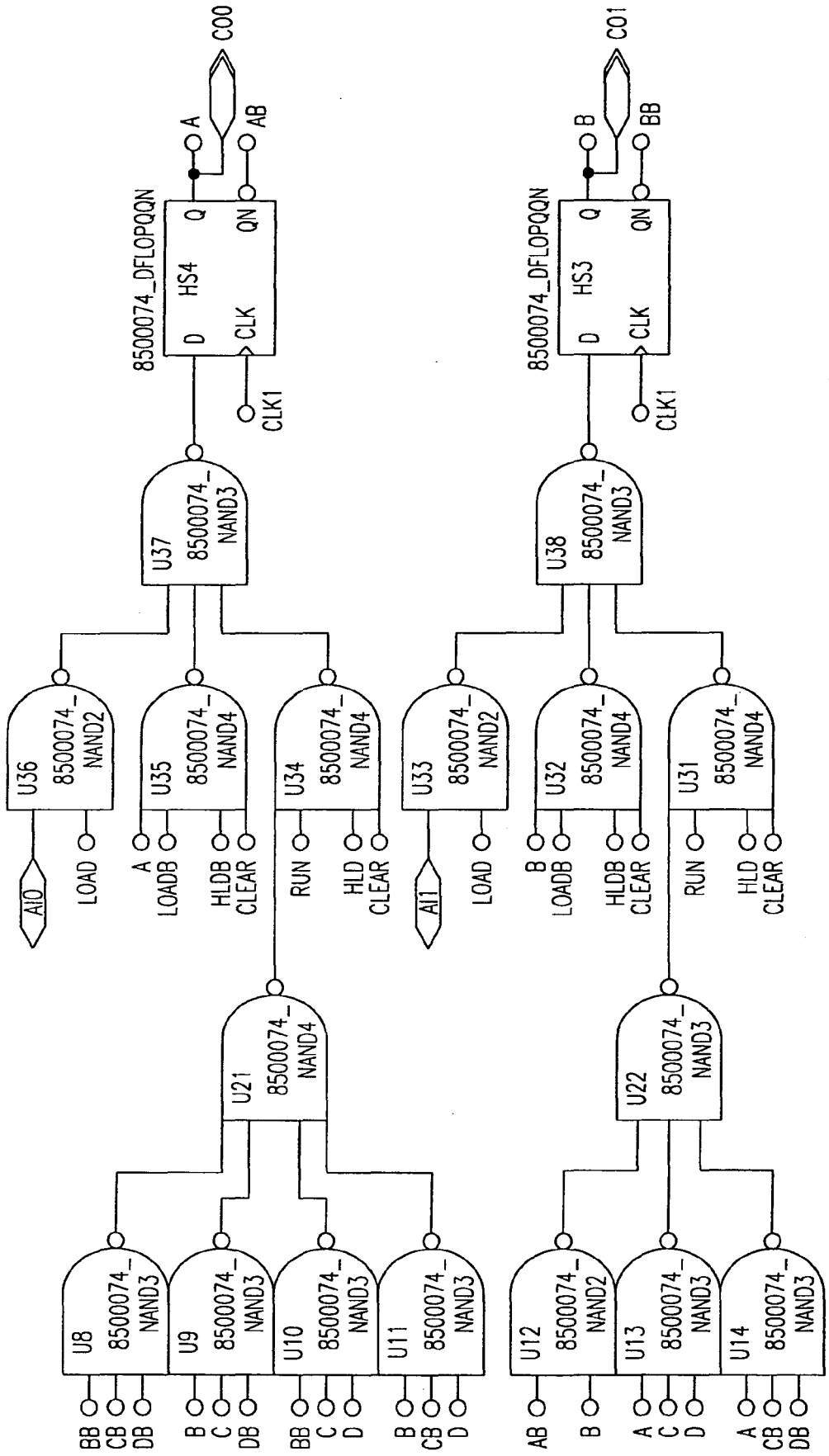
CO0
A
AB
8500074_DFLOPQQN
D
HS4
Q
QN
CLK
CLK1
U37
8500074_
NAND3
U36
8500074_
NAND2
AI0
LOAD
U35
8500074_
NAND4
A
LOADB
HLDB
CLEAR
U34
8500074_
NAND4
RUN
HLD
CLEAR
U21
8500074_
NAND4
U8
8500074_
NAND3
BB
CB
DB
U9
8500074_
NAND3
B
C
DB
U10
8500074_
NAND3
BB
C
D
U11
8500074_
NAND3
B
CB
D
CO1
B
BB
8500074_DFLOPQQN
D
HS3
Q
QN
CLK
CLK1
U38
8500074_
NAND3
U33
8500074_
NAND2
AI1
LOAD
U32
8500074_
NAND4
B
LOADB
HLDB
CLEAR
U31
8500074_
NAND4
RUN
HLD
CLEAR
U22
8500074_
NAND3
U12
8500074_
NAND2
AB
B
U13
8500074_
NAND3
A
C
D
U14
8500074_
NAND3
A
CB
DB

FIG. 106B

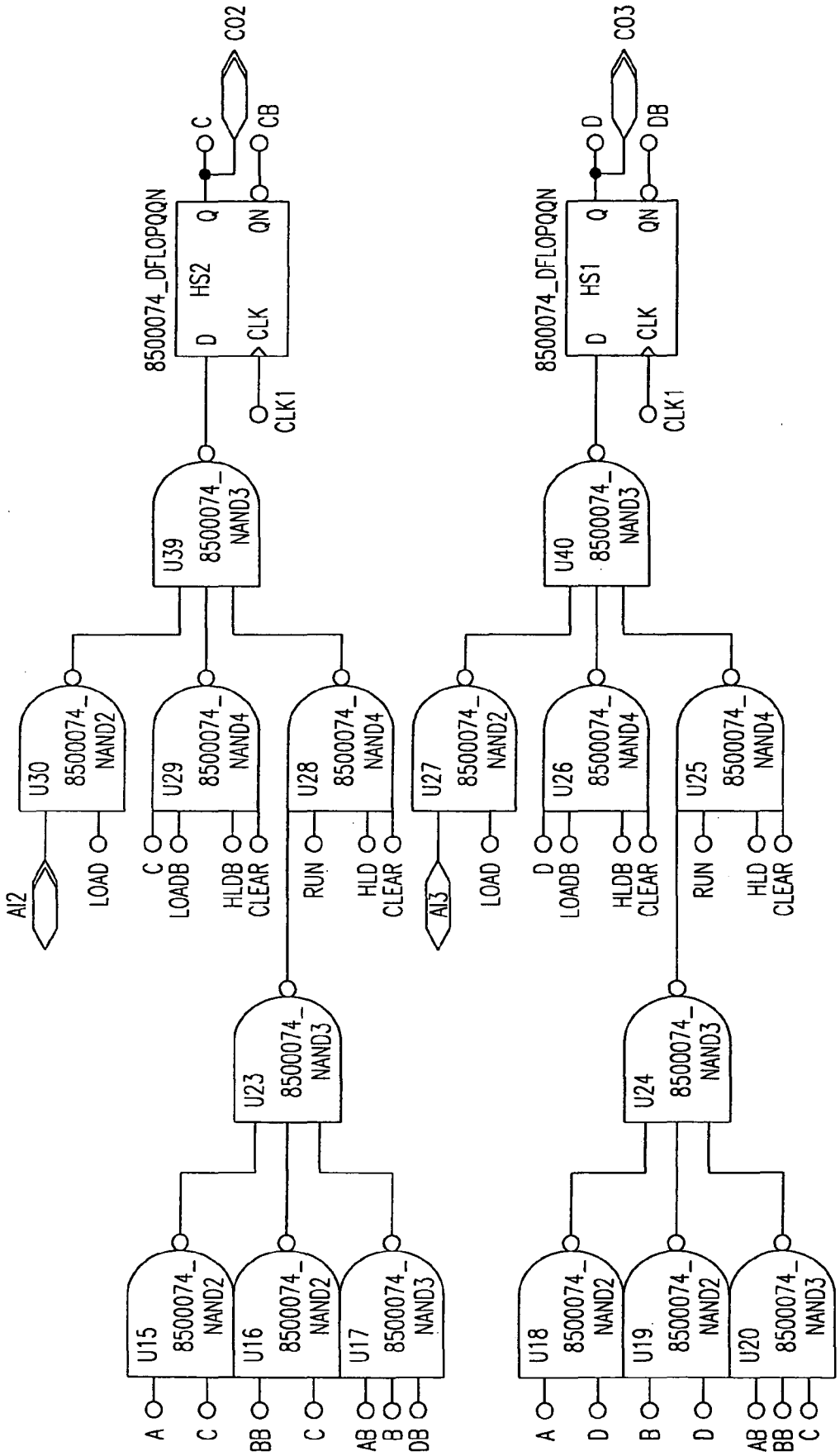
8500074_DFLOPQQN
HS2
D
CLK
Q
QN
C
CB
CO2
CLK1
8500074_DFLOPQQN
HS1
D
CLK
Q
QN
D
DB
CO3
CLK1
U39 8500074_NAND3
U40 8500074_NAND3
U30 8500074_NAND2
U29 8500074_NAND4
U28 8500074_NAND4
U27 8500074_NAND2
U26 8500074_NAND4
U25 8500074_NAND4
AI2
LOAD
C
LOADB
HLDB
CLEAR
RUN
HLD
CLEAR
AI3
LOAD
D
LOADB
HLDB
CLEAR
RUN
HLD
CLEAR
U23 8500074_NAND3
U24 8500074_NAND3
U15 8500074_NAND2
U16 8500074_NAND2
U17 8500074_NAND3
U18 8500074_NAND2
U19 8500074_NAND2
U20 8500074_NAND3
A
C
BB
C
AB
B
DB
A
D
B
D
AB
BB
C

FIG.106C

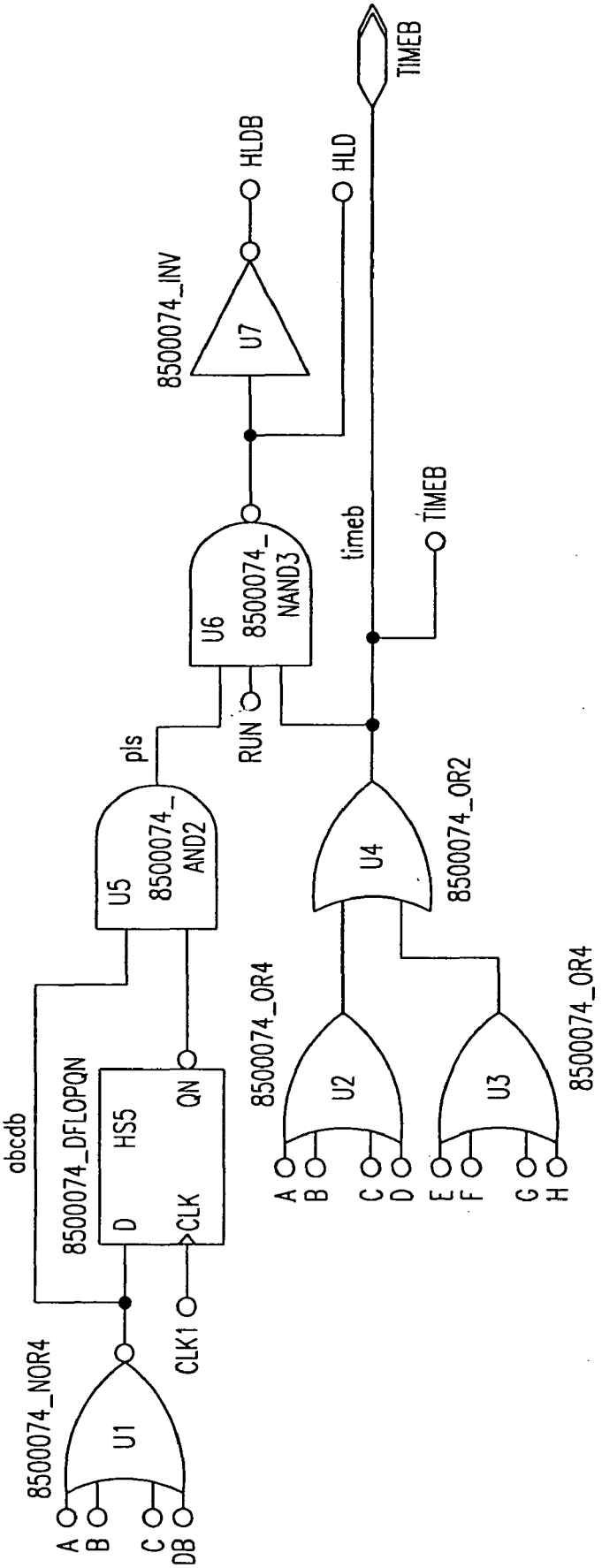
TIMEB
HLDB
HLD
8500074_INV
U7
timeb
TIMEB
U6
8500074_
NAND3
RUN
pls
U5
8500074_
AND2
U4
8500074_OR2
8500074_OR4
U2
U3
8500074_OR4
A
B
C
D
E
F
G
H
abcdb
8500074_DFLOPQN
HS5
D
CLK
QN
CLK1
8500074_NOR4
U1
A
B
C
DB

FIG.106D

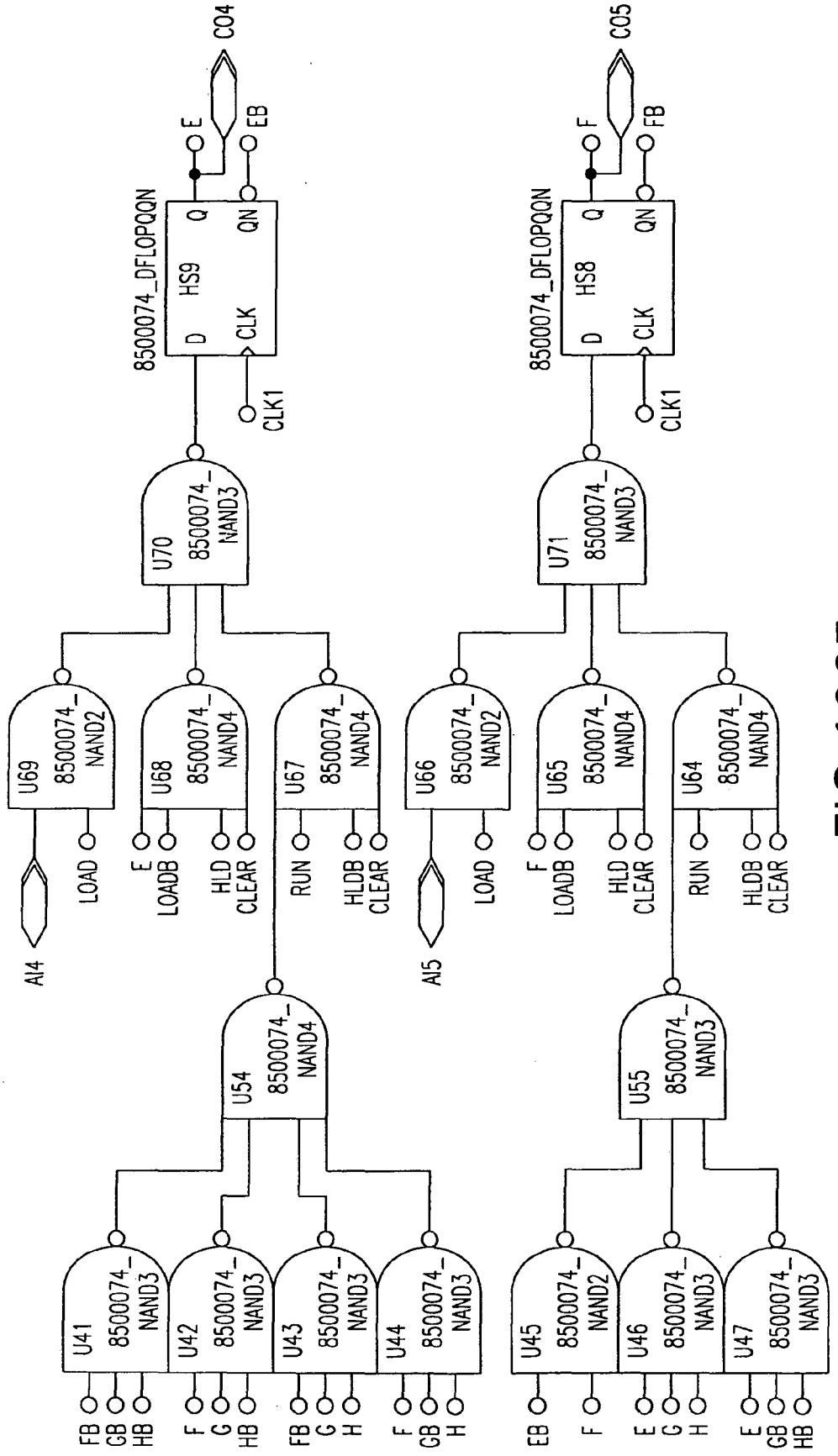
CO4
E
EB
8500074_DFLOPQQN
D
HS9
Q
QN
CLK
CLK1
U70
8500074_
NAND3
U69
8500074_
NAND2
U68
8500074_
NAND4
U67
8500074_
NAND4
AI4
LOAD
E
LOADB
HLD
CLEAR
RUN
HLDB
CLEAR
U54
8500074_
NAND4
U41
8500074_
NAND3
U42
8500074_
NAND3
U43
8500074_
NAND3
U44
8500074_
NAND3
FB
GB
HB
F
G
HB
FB
G
H
F
GB
H
CO5
F
FB
8500074_DFLOPQQN
D
HS8
Q
QN
CLK
CLK1
U71
8500074_
NAND3
U66
8500074_
NAND2
U65
8500074_
NAND4
U64
8500074_
NAND4
AI5
LOAD
F
LOADB
HLD
CLEAR
RUN
HLDB
CLEAR
U55
8500074_
NAND3
U45
8500074_
NAND2
U46
8500074_
NAND3
U47
8500074_
NAND3
EB
F
E
G
H
E
GB
HB

FIG.106E

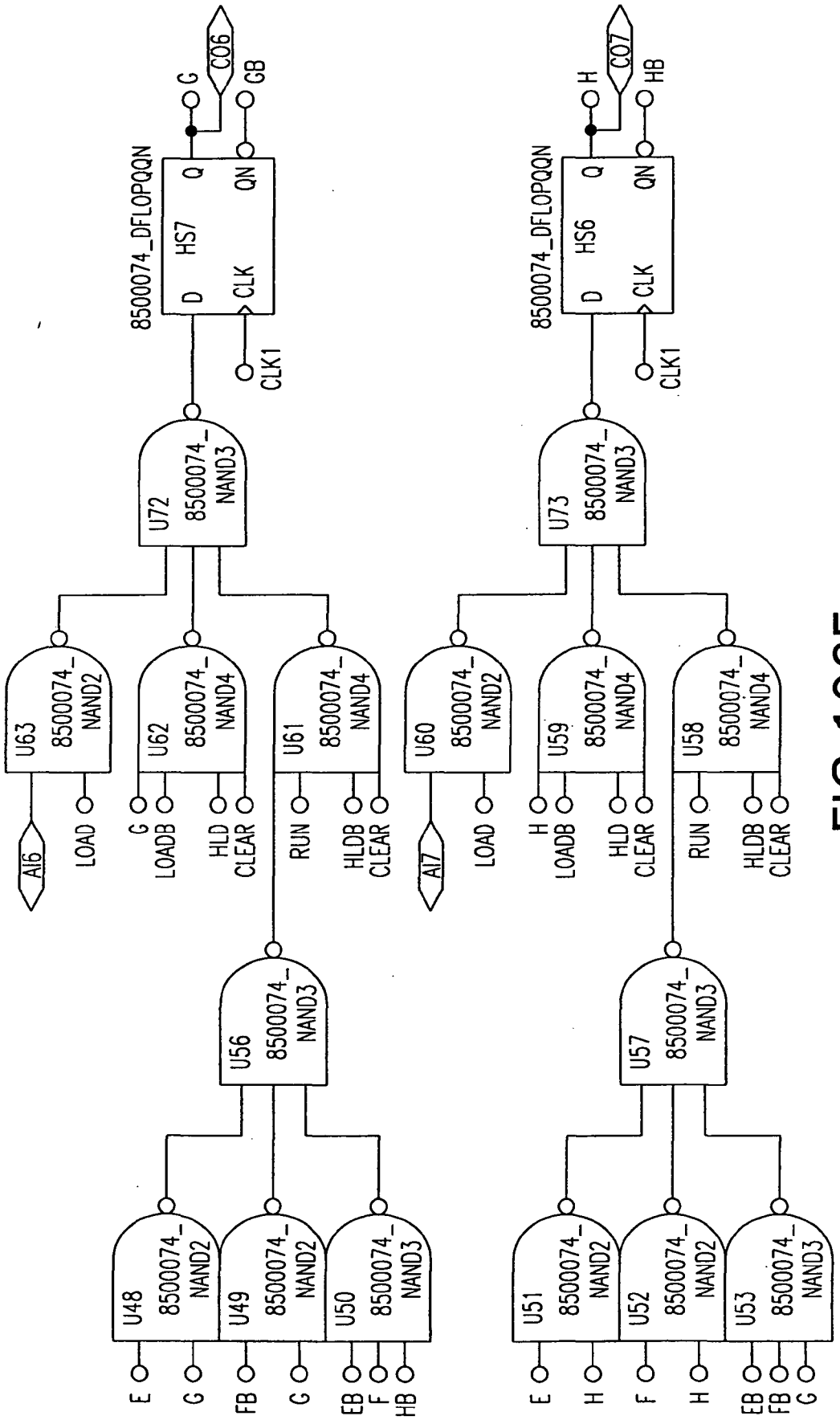
8500074_DFLOPQQN
HS7
D
Q
CLK
QN
CLK1
G
GB
CO6
U72
8500074_NAND3
U63
8500074_NAND2
U62
8500074_NAND4
U61
8500074_NAND4
AI6
LOAD
G
LOADB
HLD
CLEAR
RUN
HLDB
CLEAR
U56
8500074_NAND3
U48
8500074_NAND2
U49
8500074_NAND2
U50
8500074_NAND3
E
G
FB
G
EB
F
HB
8500074_DFLOPQQN
HS6
D
Q
CLK
QN
CLK1
H
HB
CO7
U73
8500074_NAND3
U60
8500074_NAND2
U59
8500074_NAND4
U58
8500074_NAND4
AI7
LOAD
H
LOADB
HLD
CLEAR
RUN
HLDB
CLEAR
U57
8500074_NAND3
U51
8500074_NAND2
U52
8500074_NAND2
U53
8500074_NAND3
E
H
F
H
EB
FB
G

FIG.106F

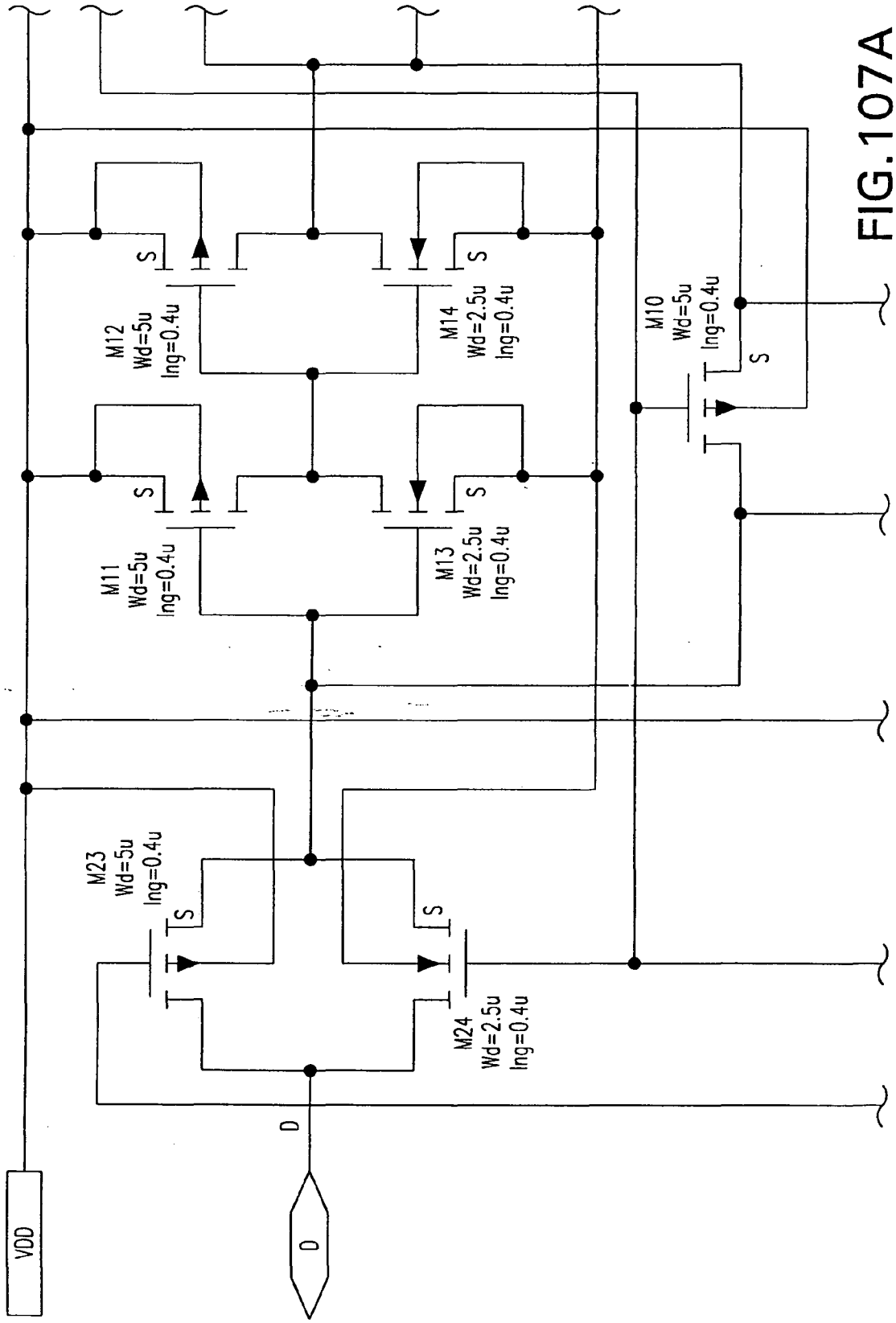
VDD
D
D
M23
Wd=5u
lng=0.4u
S
M24
Wd=2.5u
lng=0.4u
S
M11
Wd=5u
lng=0.4u
S
M12
Wd=5u
lng=0.4u
S
M13
Wd=2.5u
lng=0.4u
S
M14
Wd=2.5u
lng=0.4u
S
M10
Wd=5u
lng=0.4u
S

FIG.107A

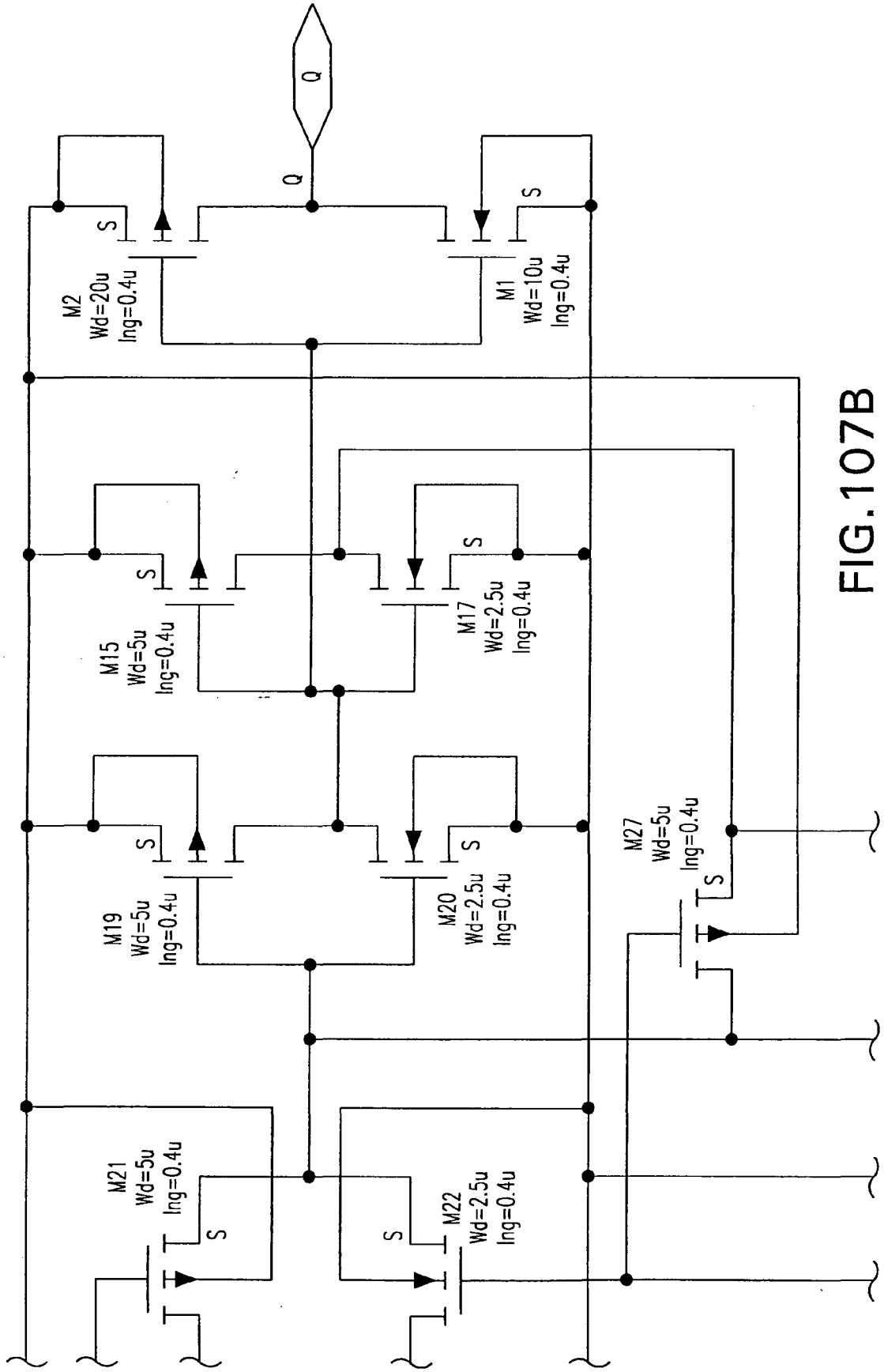
Q
Q
S
M2
Wd=20u
lng=0.4u
S
M1
Wd=10u
lng=0.4u
S
M15
Wd=5u
lng=0.4u
S
M17
Wd=2.5u
lng=0.4u
S
M19
Wd=5u
lng=0.4u
S
M20
Wd=2.5u
lng=0.4u
M27
Wd=5u
lng=0.4u
S
M21
Wd=5u
lng=0.4u
S
S
M22
Wd=2.5u
lng=0.4u

FIG.107B

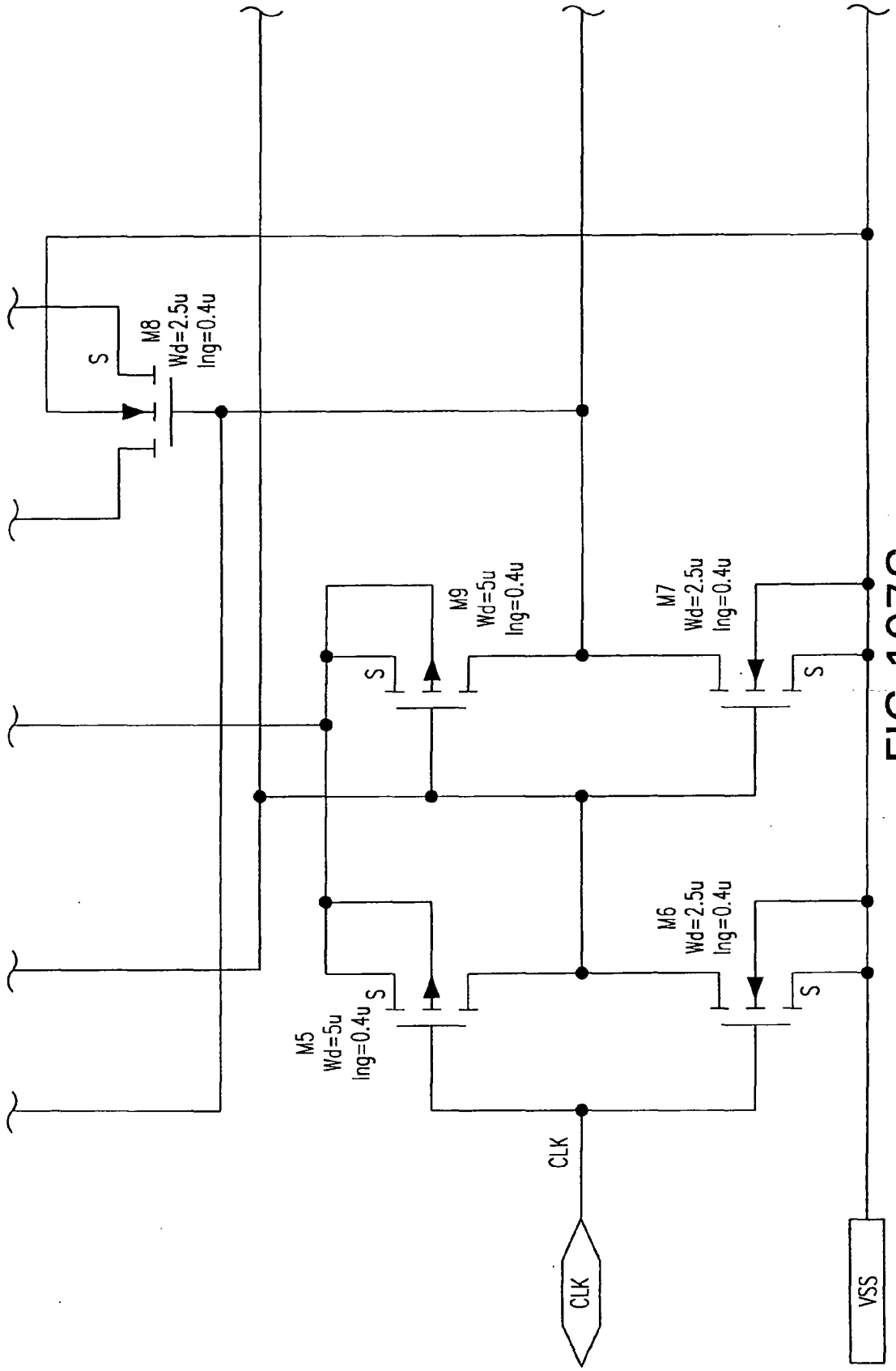
M8
Wd=2.5u
lng=0.4u
S
M9
Wd=5u
lng=0.4u
M7
Wd=2.5u
lng=0.4u
M6
Wd=2.5u
lng=0.4u
M5
Wd=5u
lng=0.4u
CLK
CLK
VSS

FIG.107C

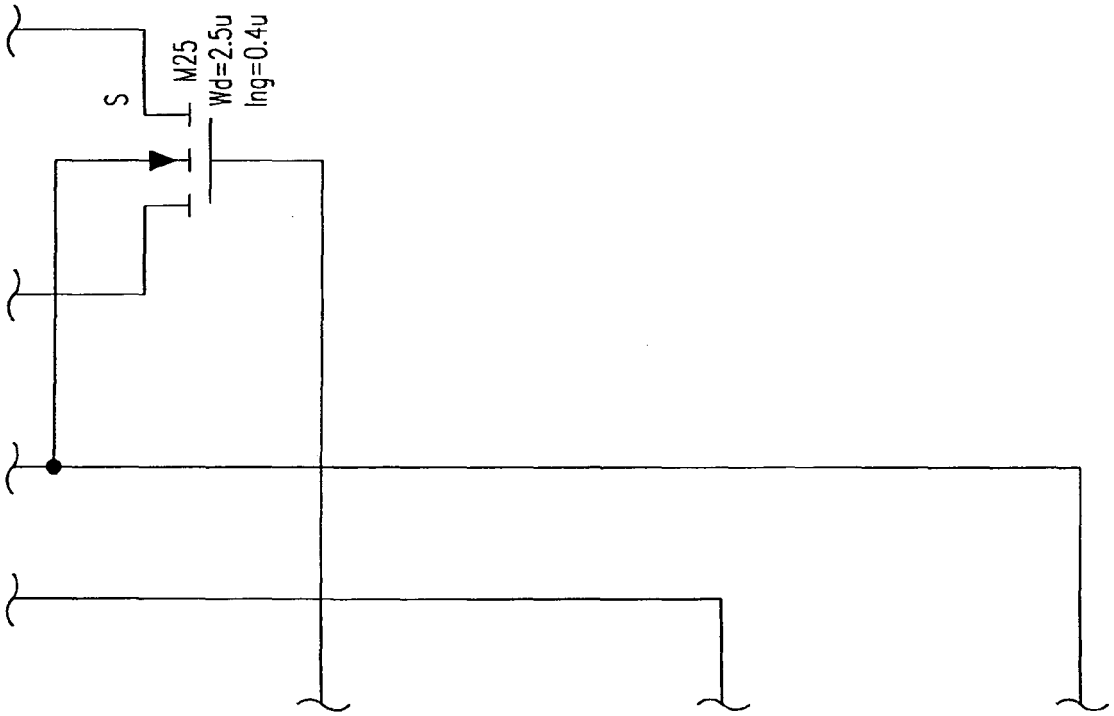

FIG.107D

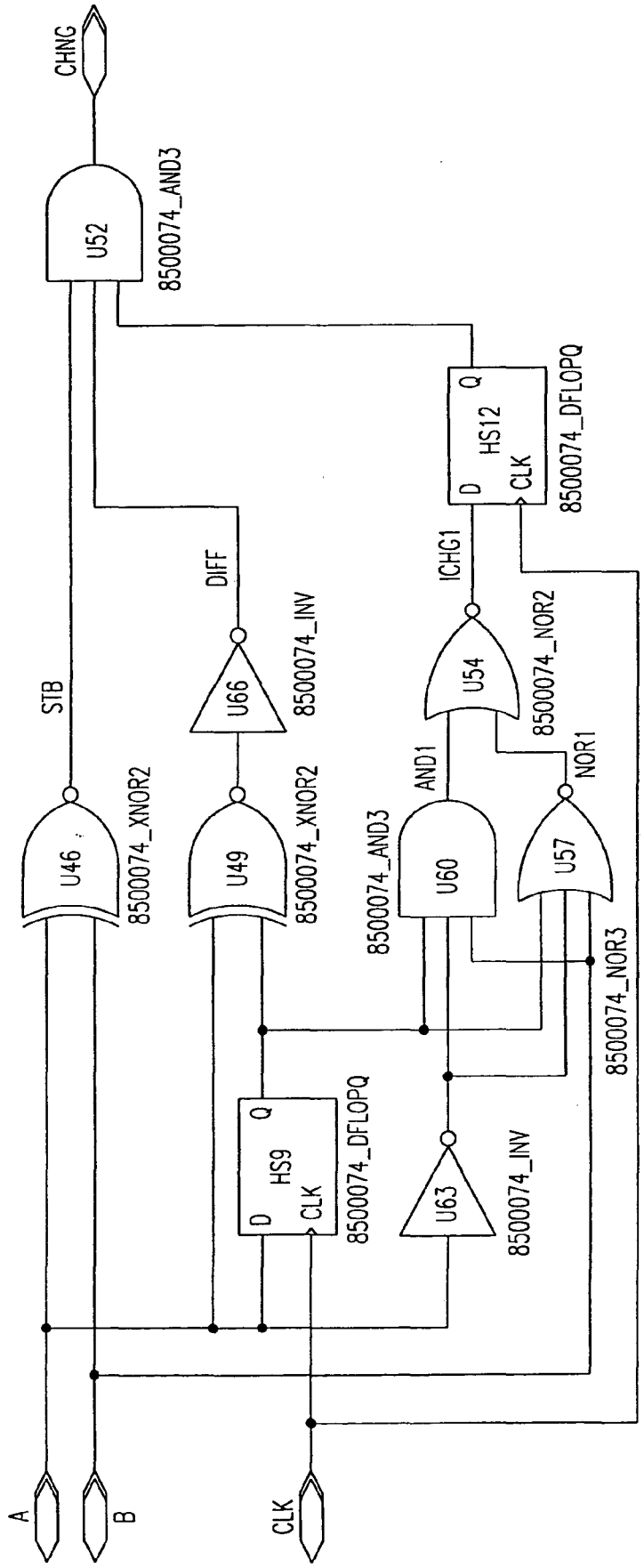
CHNG
U52
8500074_AND3
STB
U46
8500074_XNOR2
DIFF
U66
8500074_INV
U49
8500074_XNOR2
HS9
D
Q
CLK
8500074_DFLOPQ
ICHG1
HS12
D
Q
CLK
8500074_DFLOPQ
U54
8500074_NOR2
AND1
U60
8500074_AND3
NOR1
U57
8500074_NOR3
U63
8500074_INV
A
B
CLK

FIG. 108

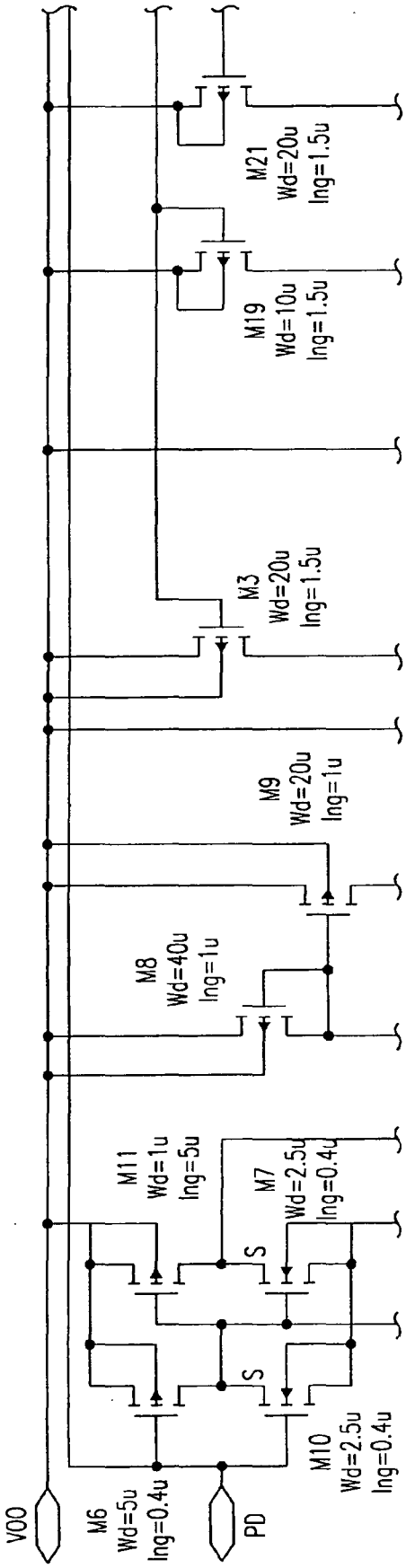
M21
Wd=20u
lng=1.5u
M19
Wd=10u
lng=1.5u
M3
Wd=20u
lng=1.5u
M9
Wd=20u
lng=1u
M8
Wd=40u
lng=1u
M11
Wd=1u
lng=5u
M7
Wd=2.5u
lng=0.4u
S
S
M10
Wd=2.5u
lng=0.4u
VDD
M6
Wd=5u
lng=0.4u
PD

FIG.109A

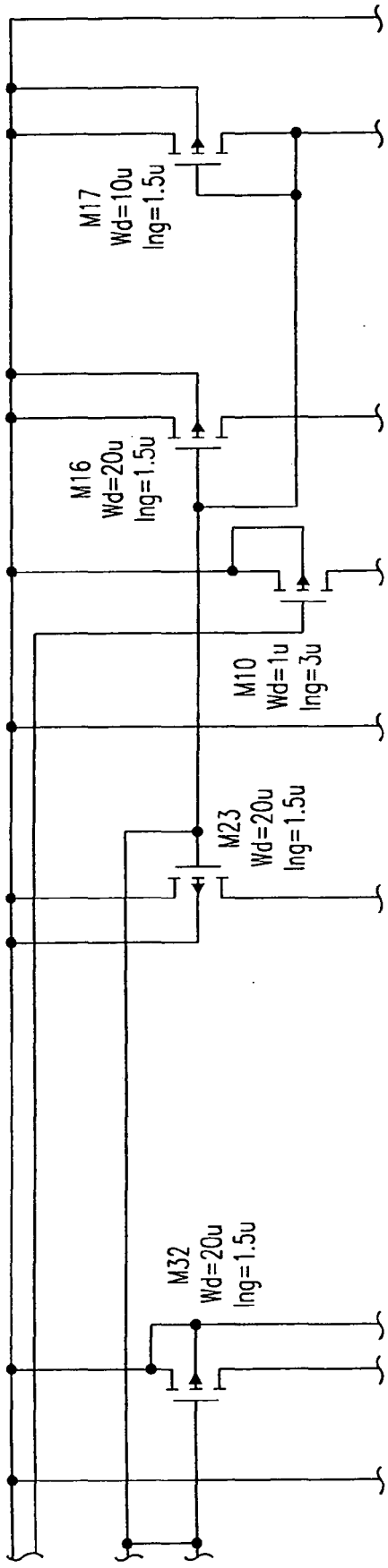
M17
Wd=10u
lng=1.5u
M16
Wd=20u
lng=1.5u
M10
Wd=1u
lng=3u
M23
Wd=20u
lng=1.5u
M32
Wd=20u
lng=1.5u

FIG.109B

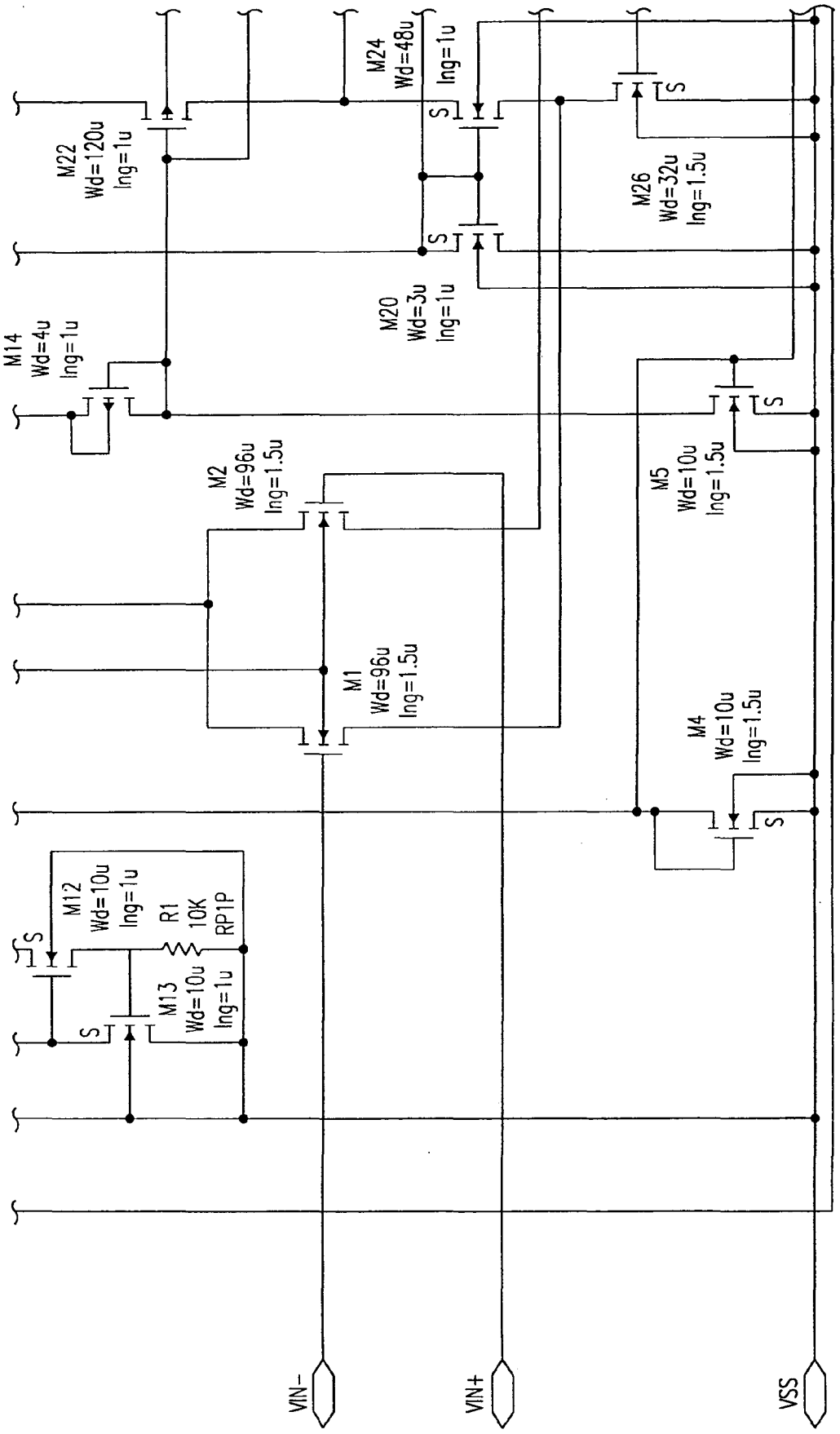
M22
Wd=120u
lng=1u
M24
Wd=48u
lng=1u
M26
Wd=32u
lng=1.5u
M20
Wd=3u
lng=1u
M14
Wd=4u
lng=1u
M2
Wd=96u
lng=1.5u
M5
Wd=10u
lng=1.5u
M1
Wd=96u
lng=1.5u
M4
Wd=10u
lng=1.5u
M12
Wd=10u
lng=1u
R1
10K
RP1P
M13
Wd=10u
lng=1u
S
VIN-
VIN+
VSS

FIG.109C

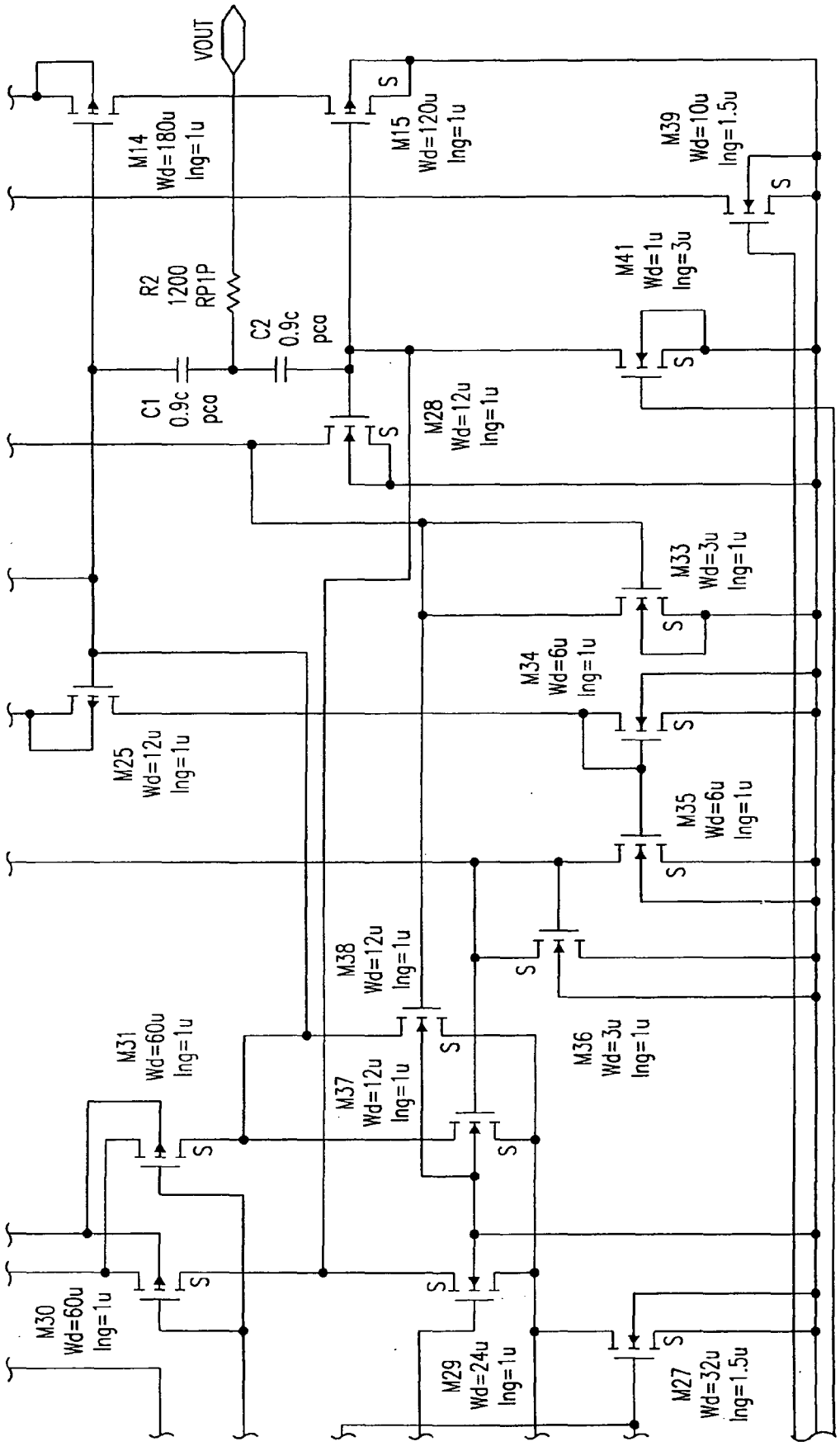
VOUT
M14
Wd=180u
lng=1u
M15
Wd=120u
lng=1u
M39
Wd=10u
lng=1.5u
R2
1200
RP1P
C2
0.9c
pca
C1
0.9c
pca
M41
Wd=1u
lng=3u
M28
Wd=12u
lng=1u
M33
Wd=3u
lng=1u
M34
Wd=6u
lng=1u
M25
Wd=12u
lng=1u
M35
Wd=6u
lng=1u
M38
Wd=12u
lng=1u
M31
Wd=60u
lng=1u
M37
Wd=12u
lng=1u
M36
Wd=3u
lng=1u
M30
Wd=60u
lng=1u
M29
Wd=24u
lng=1u
M27
Wd=32u
lng=1.5u
S

FIG. 109D

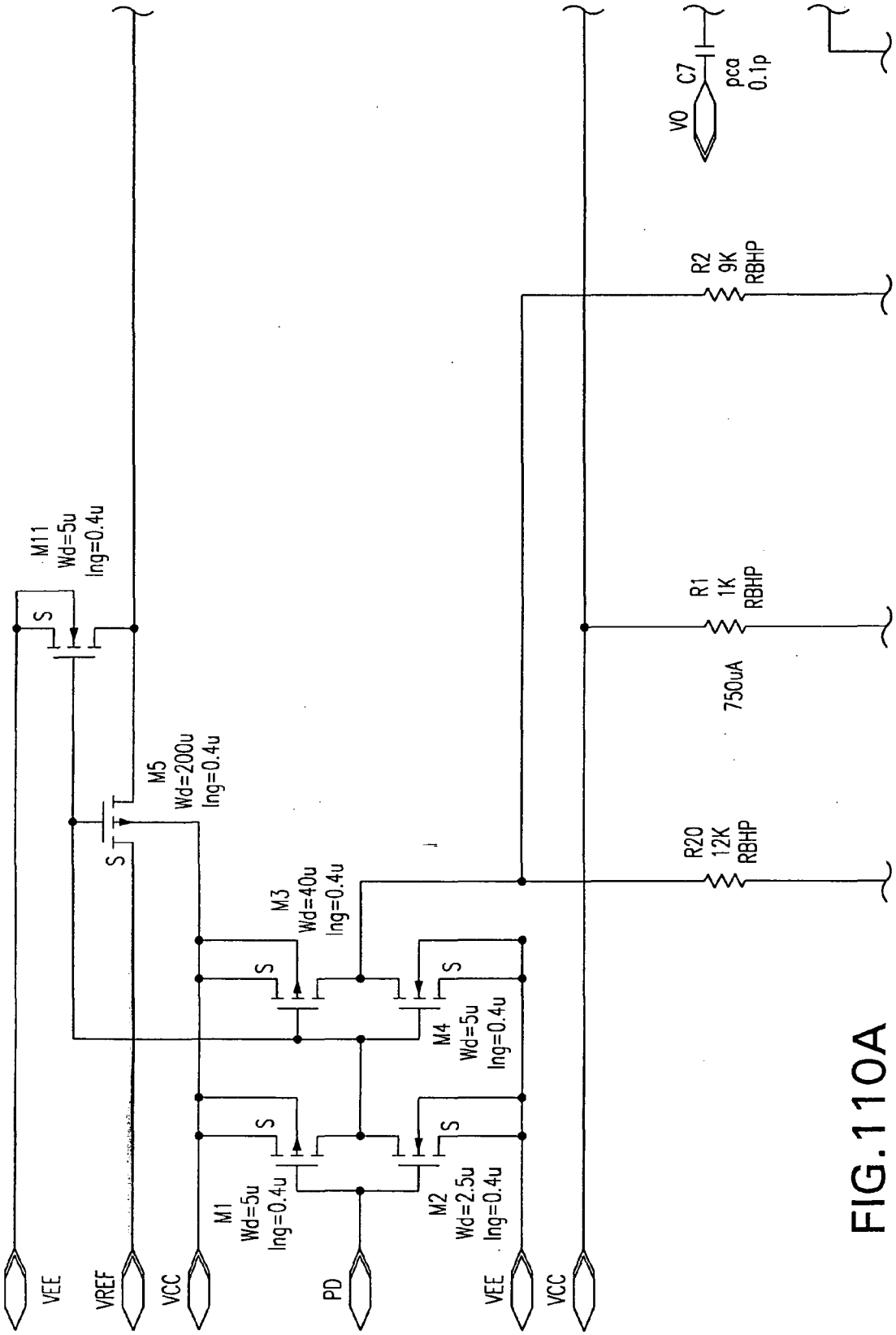
M11
Wd=5u
lng=0.4u
M5
Wd=200u
lng=0.4u
M3
Wd=40u
lng=0.4u
M4
Wd=5u
lng=0.4u
M1
Wd=5u
lng=0.4u
M2
Wd=2.5u
lng=0.4u
S
VEE
VREF
VCC
PD
VEE
VCC
R2
9K
RBHP
R1
1K
RBHP
750uA
R20
12K
RBHP
VO
C7
pca
0.1p

FIG.110A

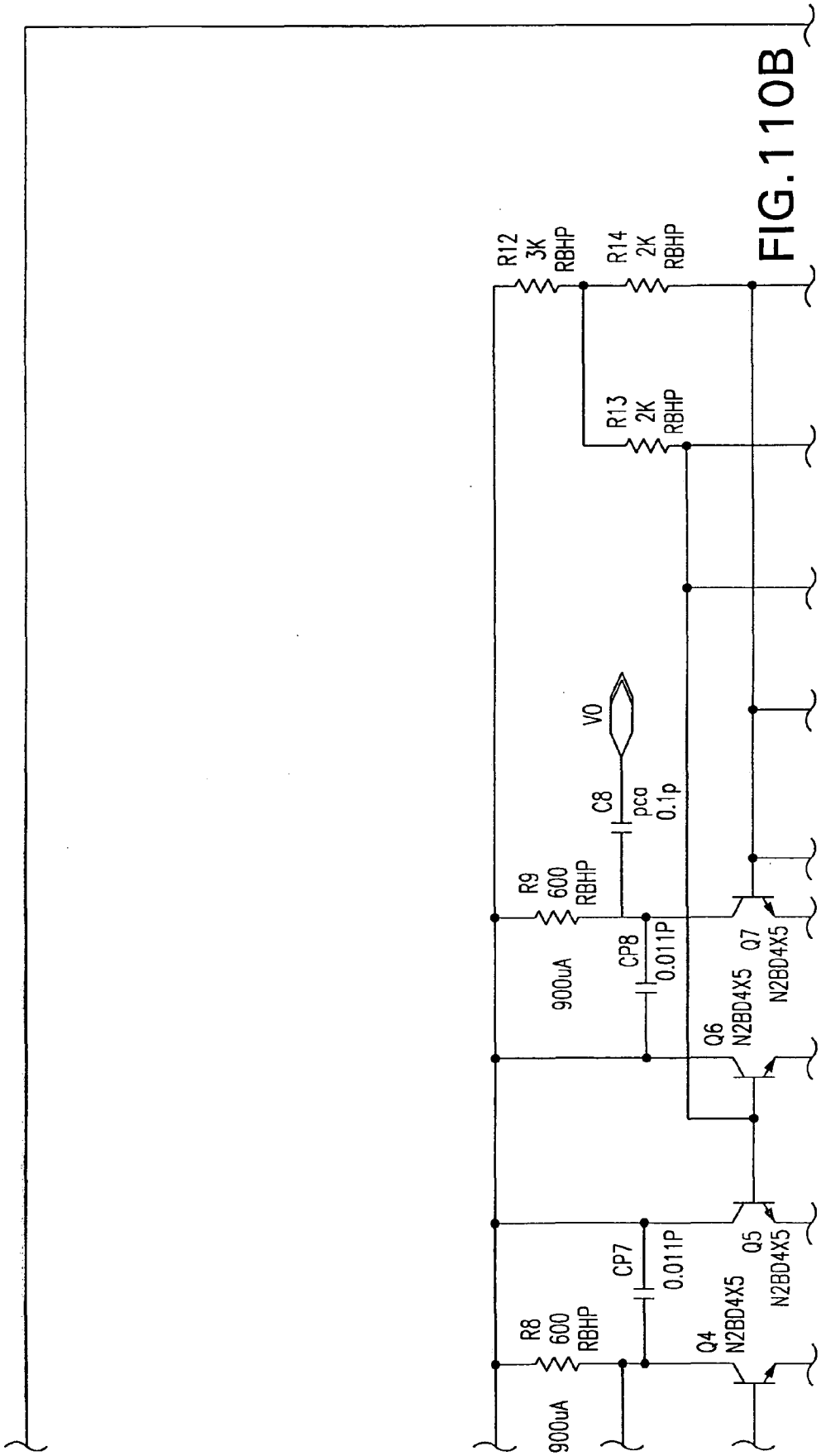
R12
3K
RBHP
R14
2K
RBHP
R13
2K
RBHP
VO
C8
pca
0.1p
R9
600
RBHP
900uA
CP8
0.011P
Q7
N2BD4X5
Q6
N2BD4X5
CP7
0.011P
Q5
N2BD4X5
R8
600
RBHP
Q4
N2BD4X5
900uA

FIG.110B

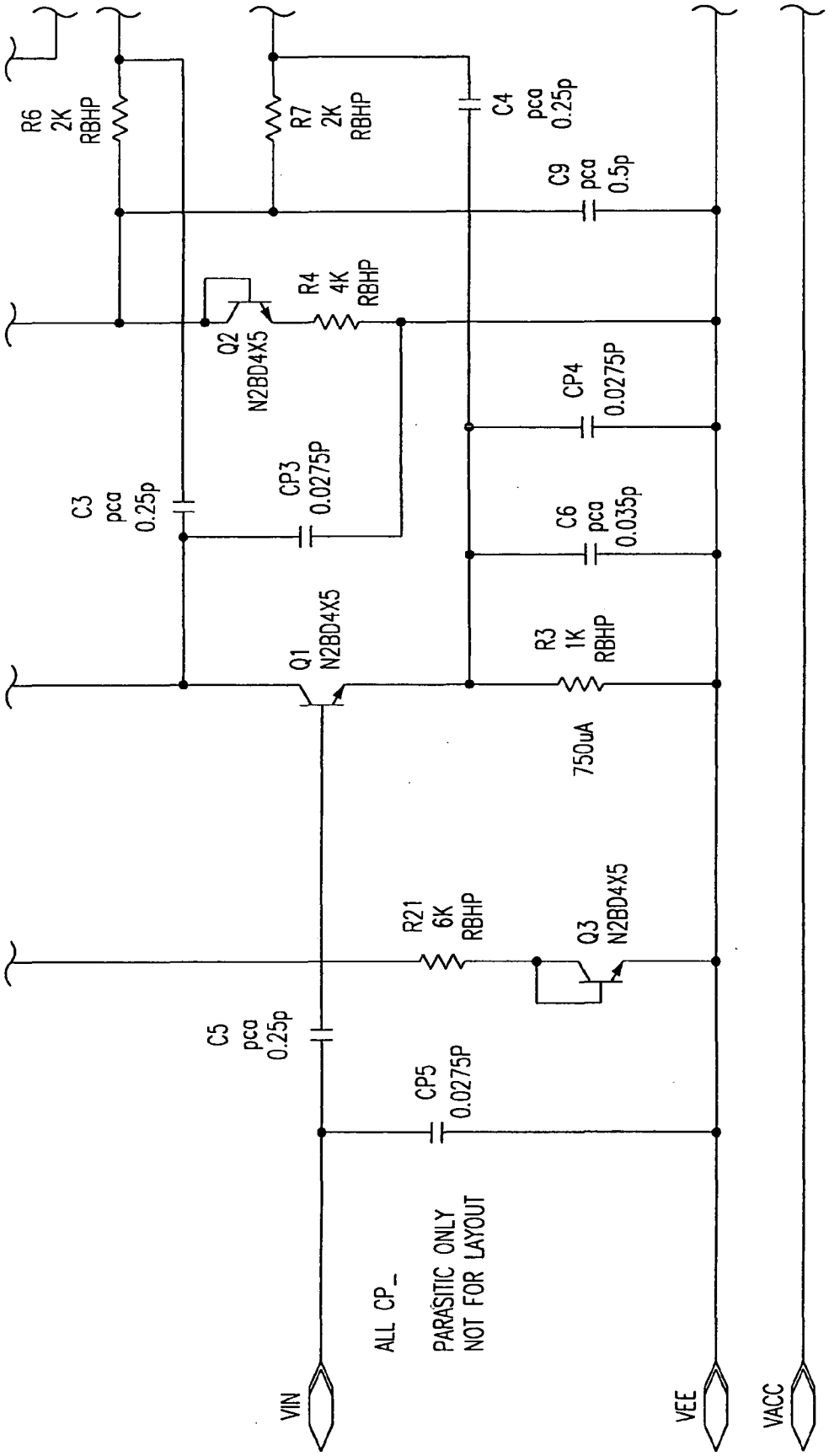
R6
2K
RBHP
R7
2K
RBHP
C4
pca
0.25p
C9
pca
0.5p
R4
4K
RBHP
Q2
N2BD4X5
CP4
0.0275P
C3
pca
0.25p
CP3
0.0275P
C6
pca
0.035p
Q1
N2BD4X5
R3
1K
RBHP
750uA
R21
6K
RBHP
Q3
N2BD4X5
C5
pca
0.25p
CP5
0.0275P
ALL CP_
PARASITIC ONLY
NOT FOR LAYOUT
VIN
VEE
VACC

FIG.110C

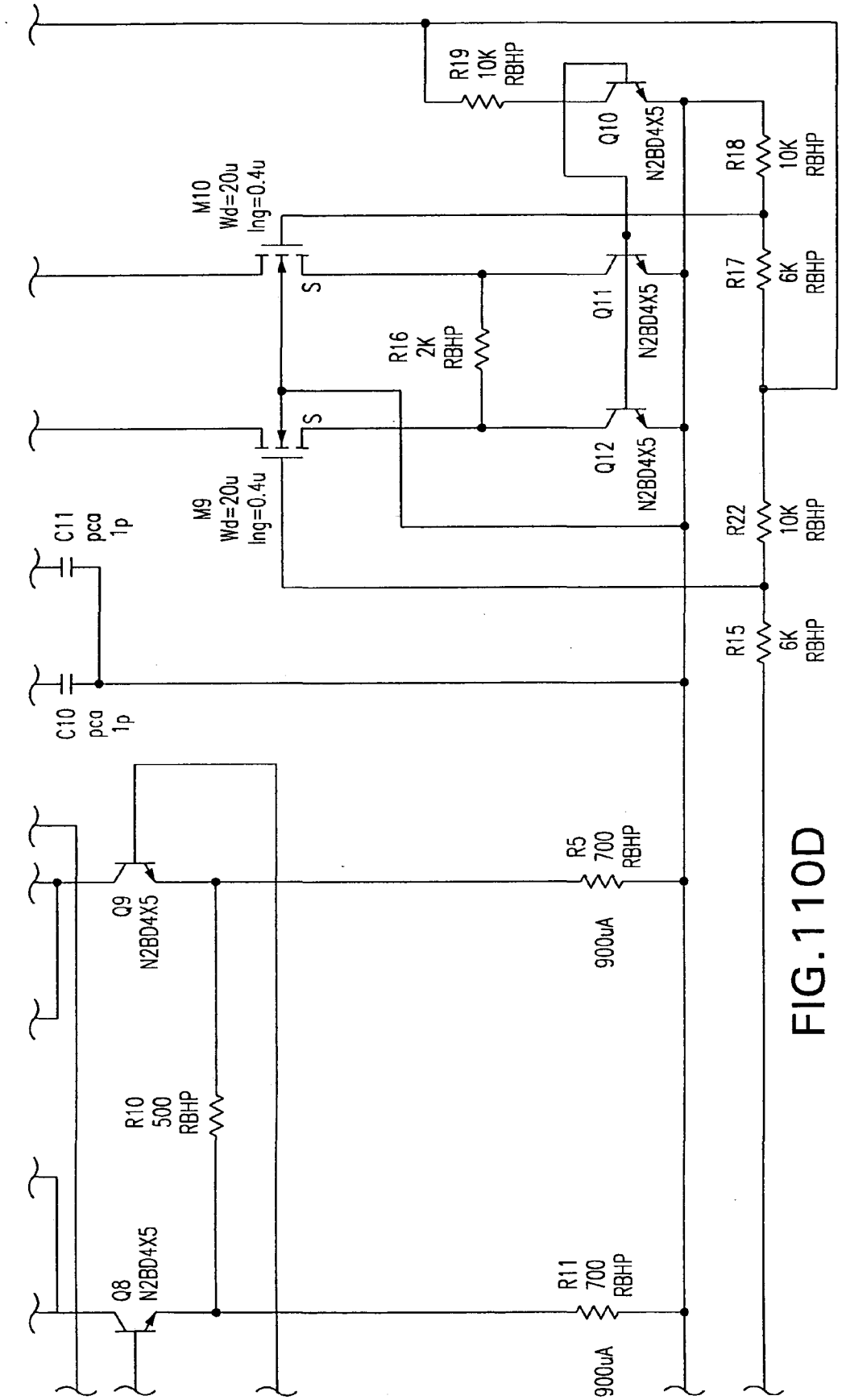
R19
10K
RBHP
Q10
N2BD4X5
R18
10K
RBHP
M10
Wd=20u
lng=0.4u
S
Q11
N2BD4X5
R17
6K
RBHP
R16
2K
RBHP
S
Q12
N2BD4X5
M9
Wd=20u
lng=0.4u
C11
pca
1p
R22
10K
RBHP
R15
6K
RBHP
C10
pca
1p
R5
700
RBHP
Q9
N2BD4X5
900uA
R10
500
RBHP
Q8
N2BD4X5
R11
700
RBHP
900uA

FIG.110D

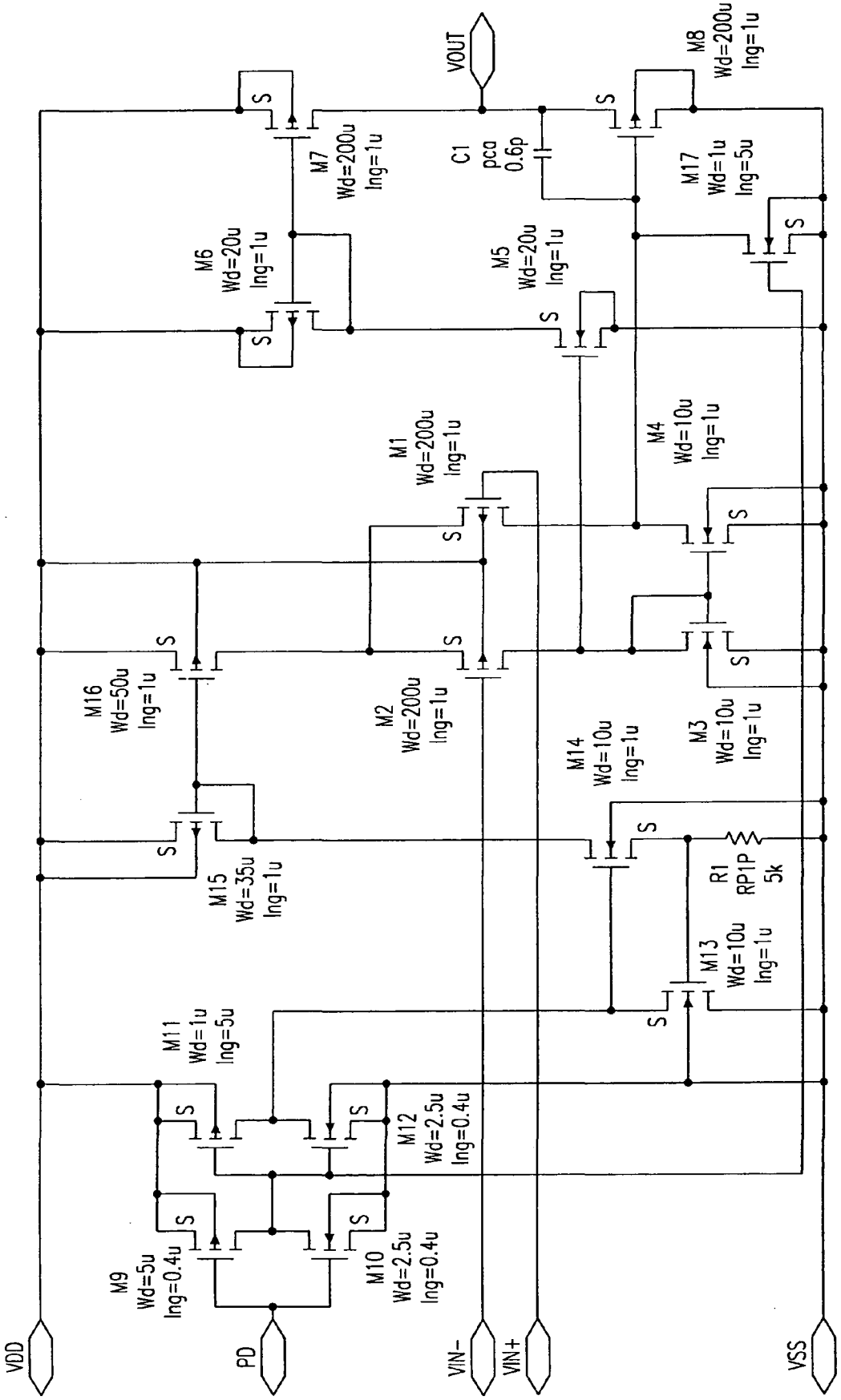
VDD
PD
VIN-
VIN+
VSS
VOUT
M9
Wd=5u
lng=0.4u
M10
Wd=2.5u
lng=0.4u
M11
Wd=1u
lng=5u
M12
Wd=2.5u
lng=0.4u
M13
Wd=10u
lng=1u
R1
RP1P
5k
M14
Wd=10u
lng=1u
M15
Wd=35u
lng=1u
M16
Wd=50u
lng=1u
M2
Wd=200u
lng=1u
M3
Wd=10u
lng=1u
M1
Wd=200u
lng=1u
M4
Wd=10u
lng=1u
M5
Wd=20u
lng=1u
M6
Wd=20u
lng=1u
M7
Wd=200u
lng=1u
C1
pca
0.6p
M17
Wd=1u
lng=5u
M8
Wd=200u
lng=1u
S

FIG.111

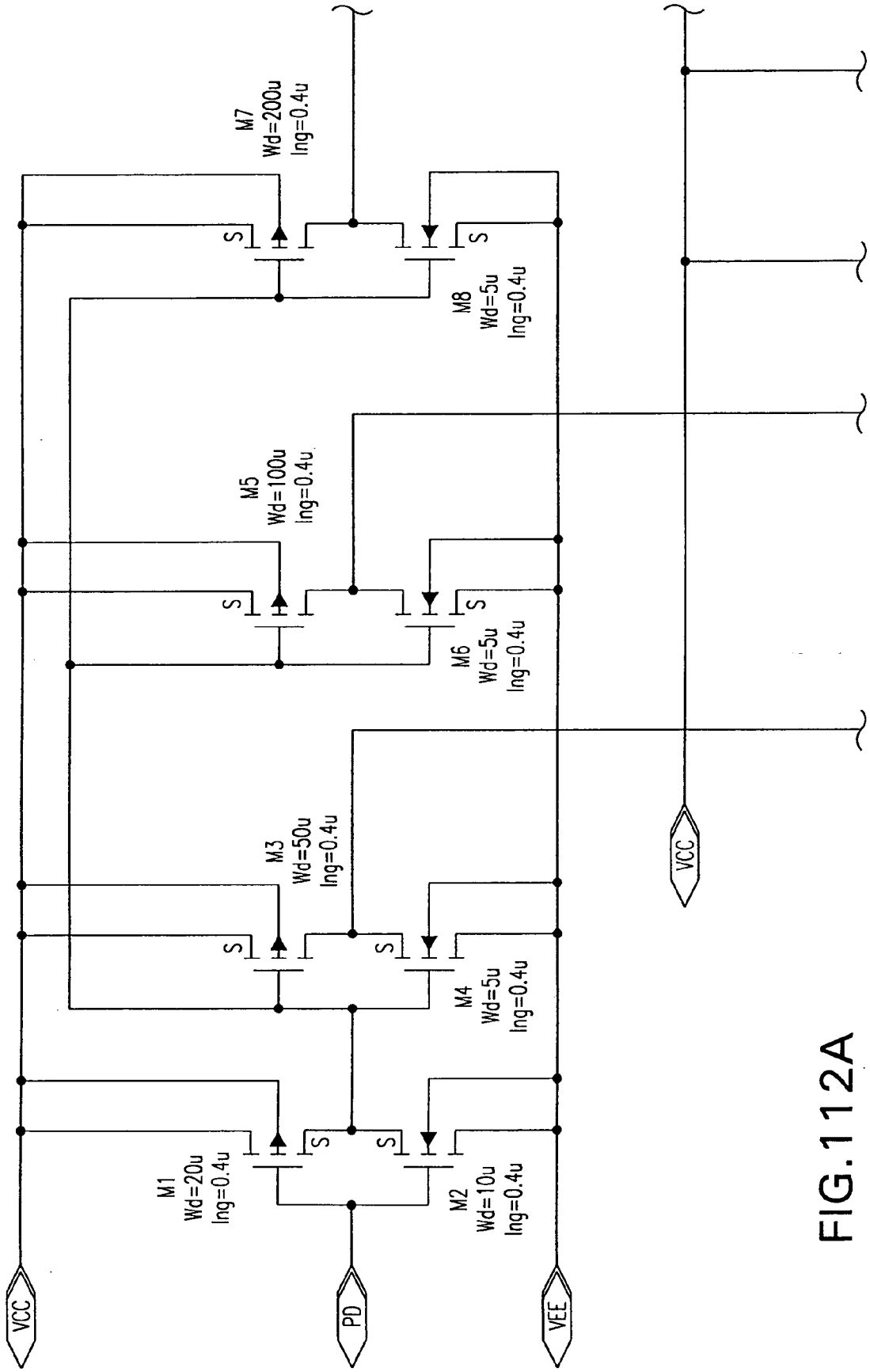
M7
Wd=200u
lng=0.4u
M8
Wd=5u
lng=0.4u
M5
Wd=100u
lng=0.4u
M6
Wd=5u
lng=0.4u
M3
Wd=50u
lng=0.4u
M4
Wd=5u
lng=0.4u
M1
Wd=20u
lng=0.4u
M2
Wd=10u
lng=0.4u
S
VCC
PD
VEE
VCC

FIG.112A

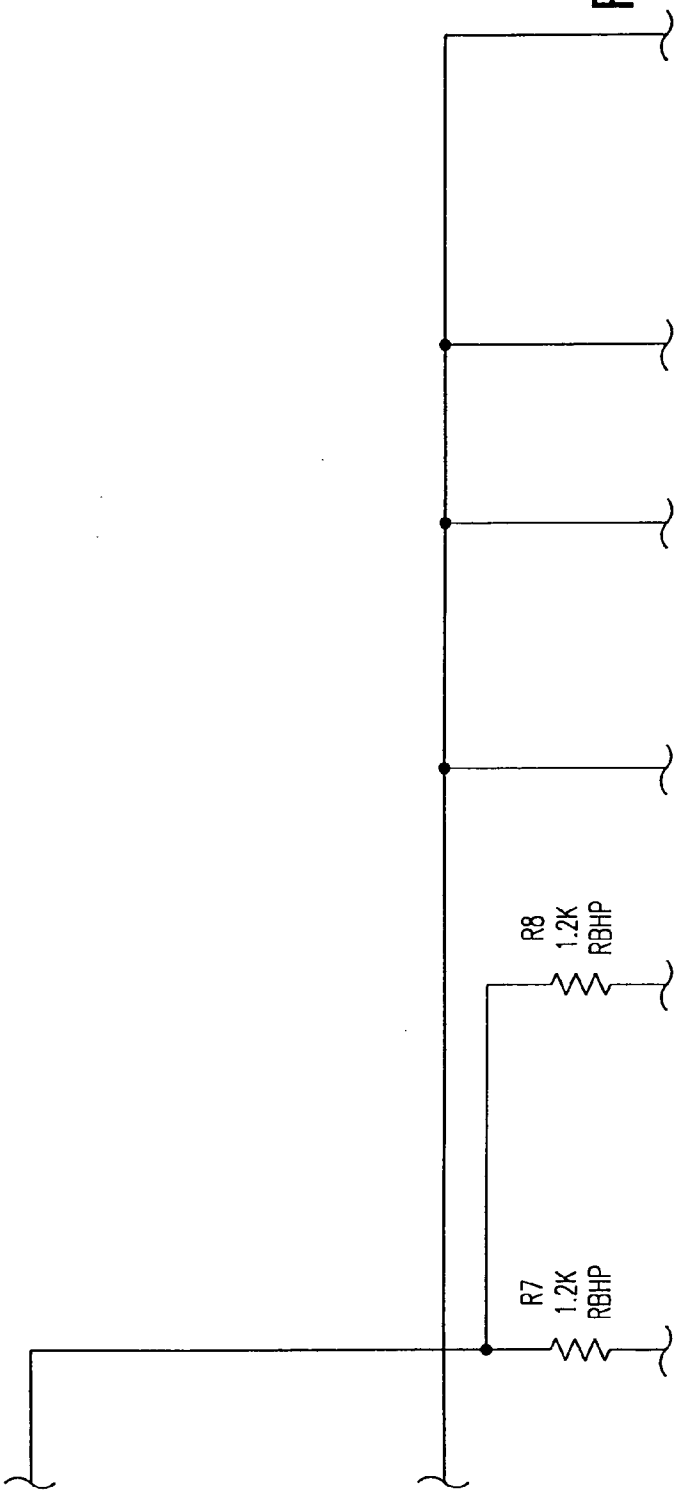

FIG.112B

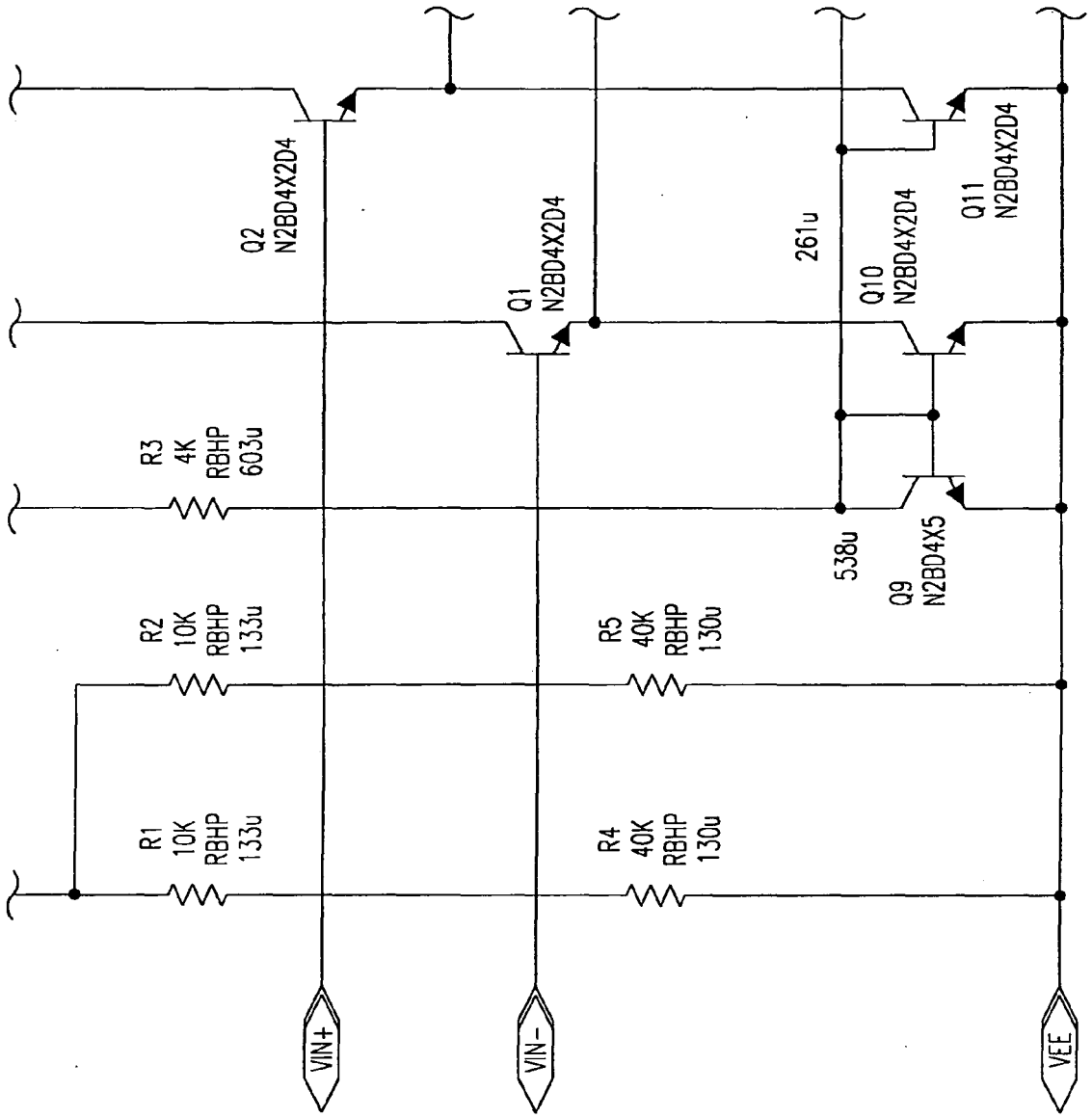
Q2
N2BD4X2D4
Q1
N2BD4X2D4
261u
Q10
N2BD4X2D4
Q11
N2BD4X2D4
R3
4K
RBHP
603u
538u
Q9
N2BD4X5
R2
10K
RBHP
133u
R5
40K
RBHP
130u
R1
10K
RBHP
133u
R4
40K
RBHP
130u
VIN+
VIN-
VEE

FIG.112C

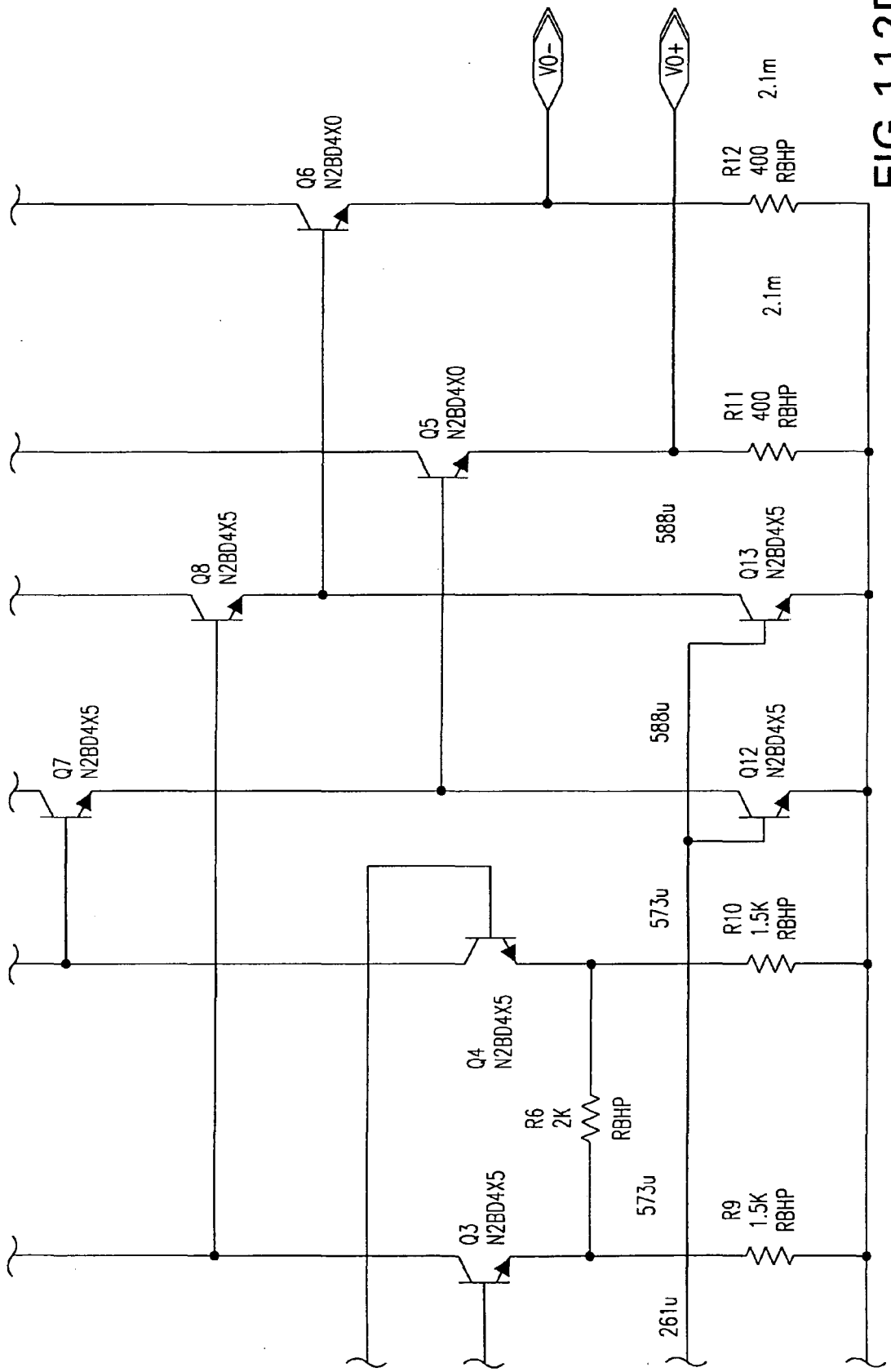
VO-
VO+
Q6
N2BD4X0
Q5
N2BD4X0
Q8
N2BD4X5
Q7
N2BD4X5
Q4
N2BD4X5
Q3
N2BD4X5
Q13
N2BD4X5
Q12
N2BD4X5
R12
400
RBHP
2.1m
R11
400
RBHP
2.1m
588u
588u
573u
R10
1.5K
RBHP
R6
2K
RBHP
573u
R9
1.5K
RBHP
261u

FIG. 112D

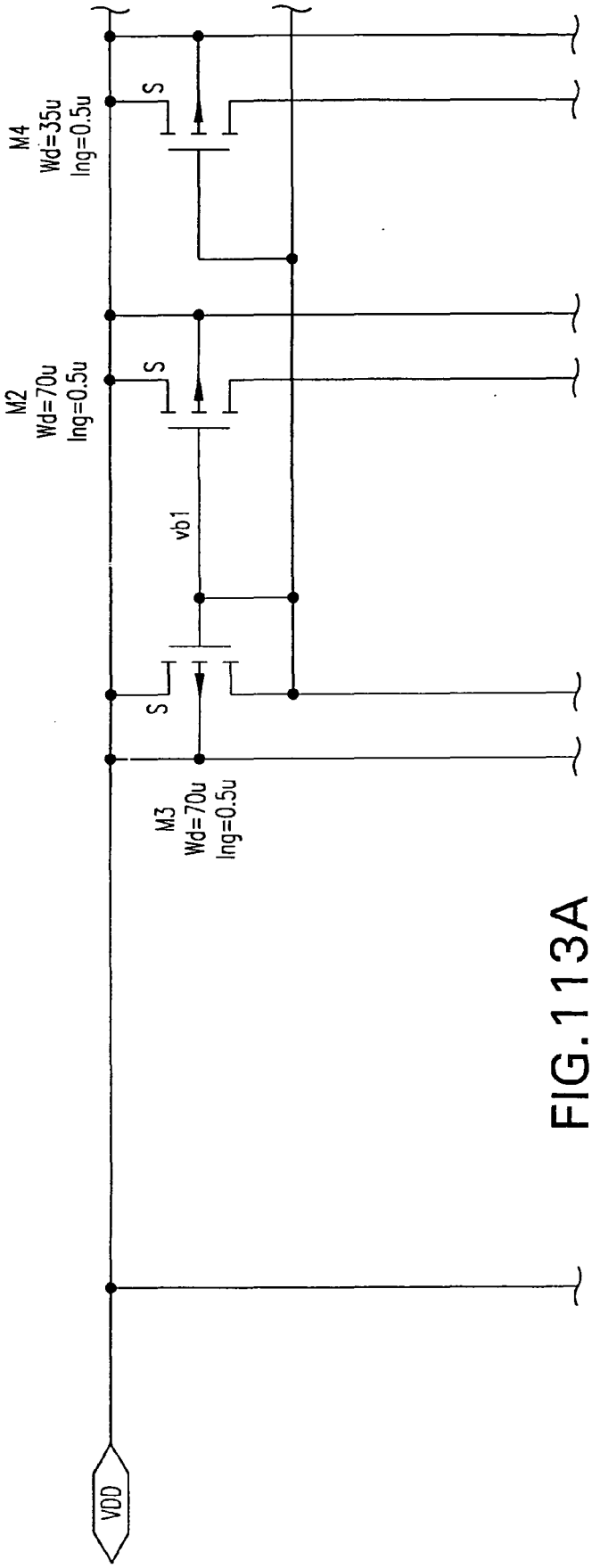

FIG.113A

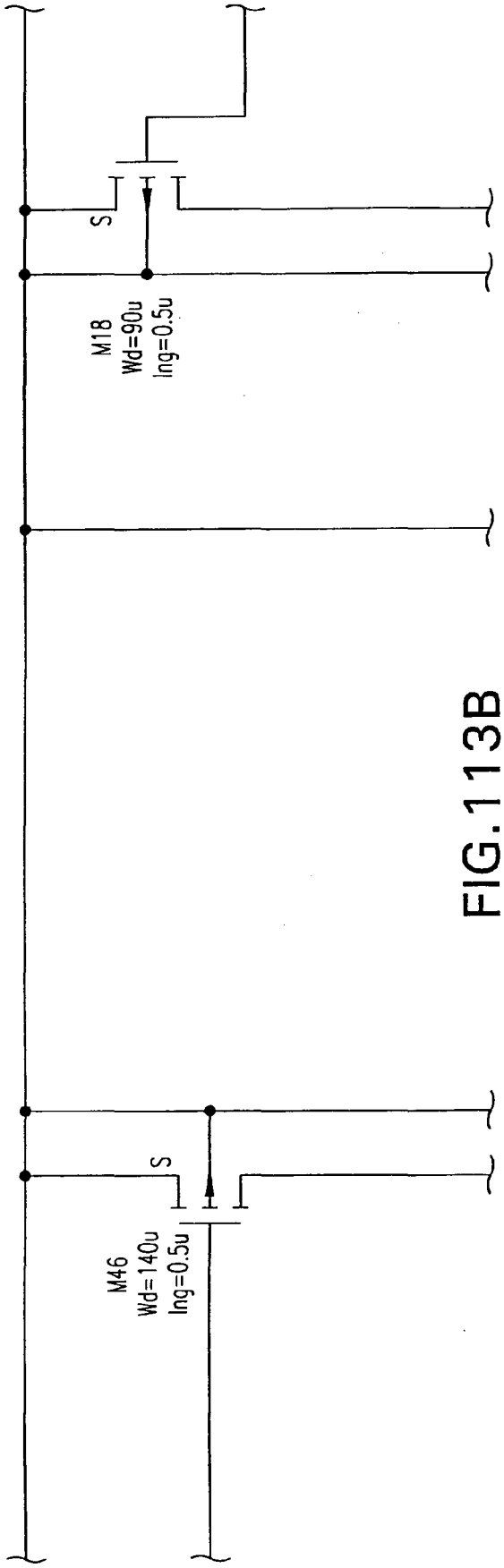

FIG.113B

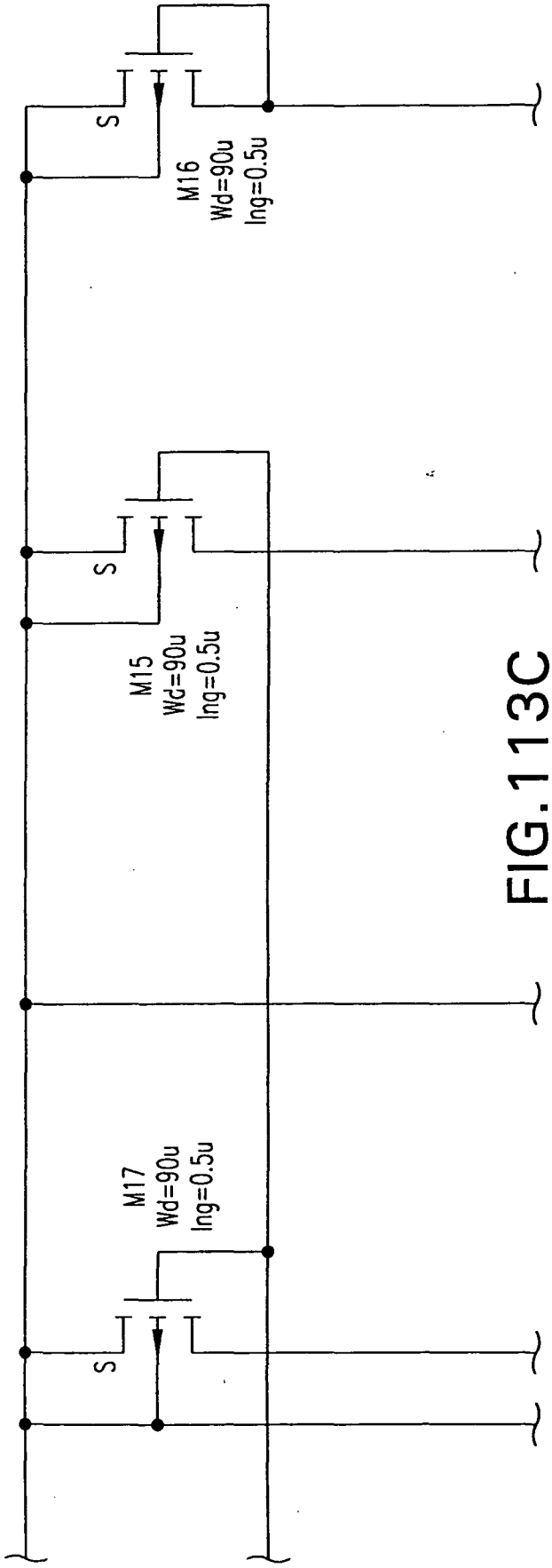

FIG.113C

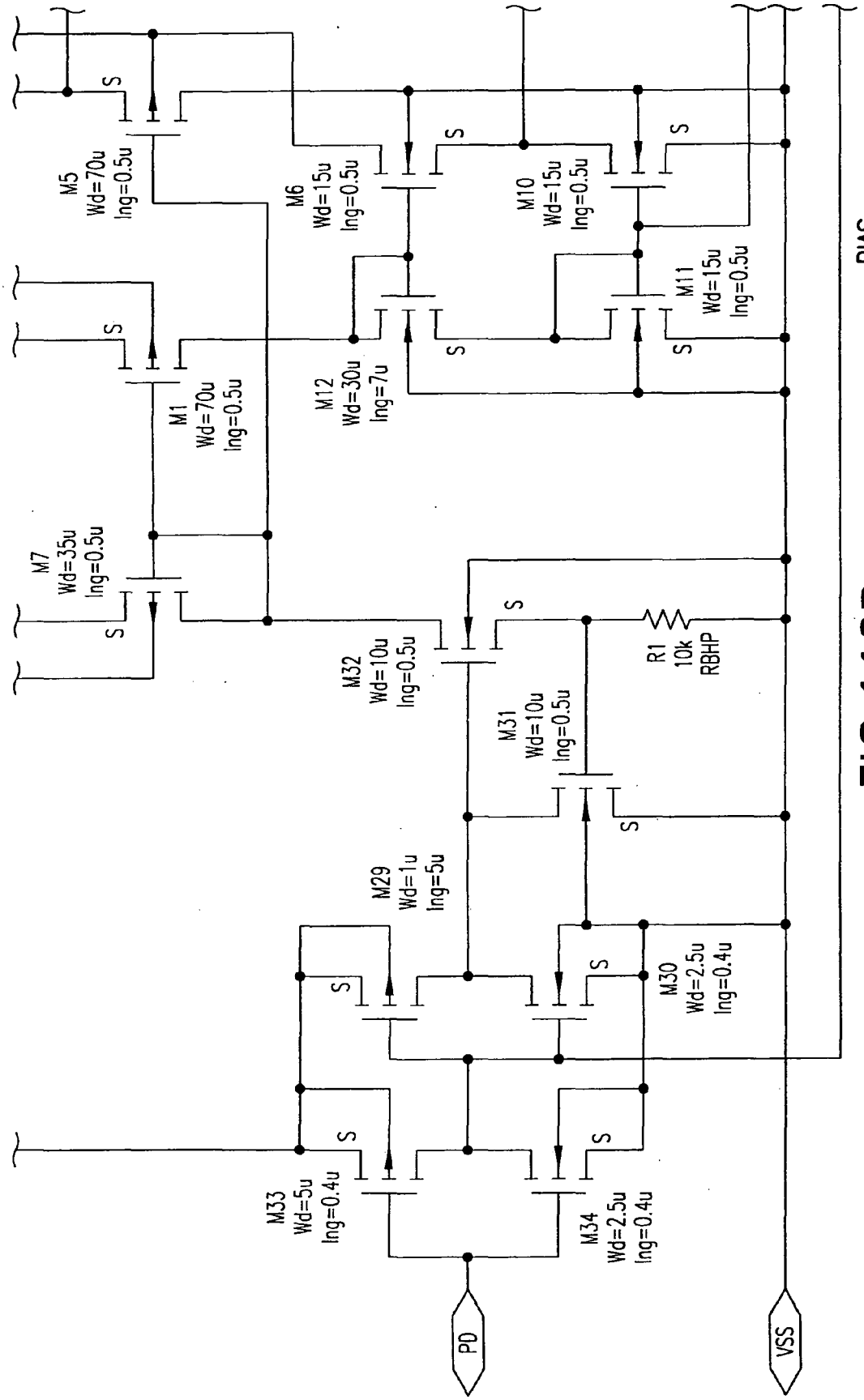
M5
Wd=70u
lng=0.5u
M6
Wd=15u
lng=0.5u
M10
Wd=15u
lng=0.5u
M11
Wd=15u
lng=0.5u
BIAS
M1
Wd=70u
lng=0.5u
M12
Wd=30u
lng=7u
M7
Wd=35u
lng=0.5u
M32
Wd=10u
lng=0.5u
R1
10k
RBHP
M31
Wd=10u
lng=0.5u
M29
Wd=1u
lng=5u
M30
Wd=2.5u
lng=0.4u
M33
Wd=5u
lng=0.4u
M34
Wd=2.5u
lng=0.4u
PD
VSS
S

FIG.113D

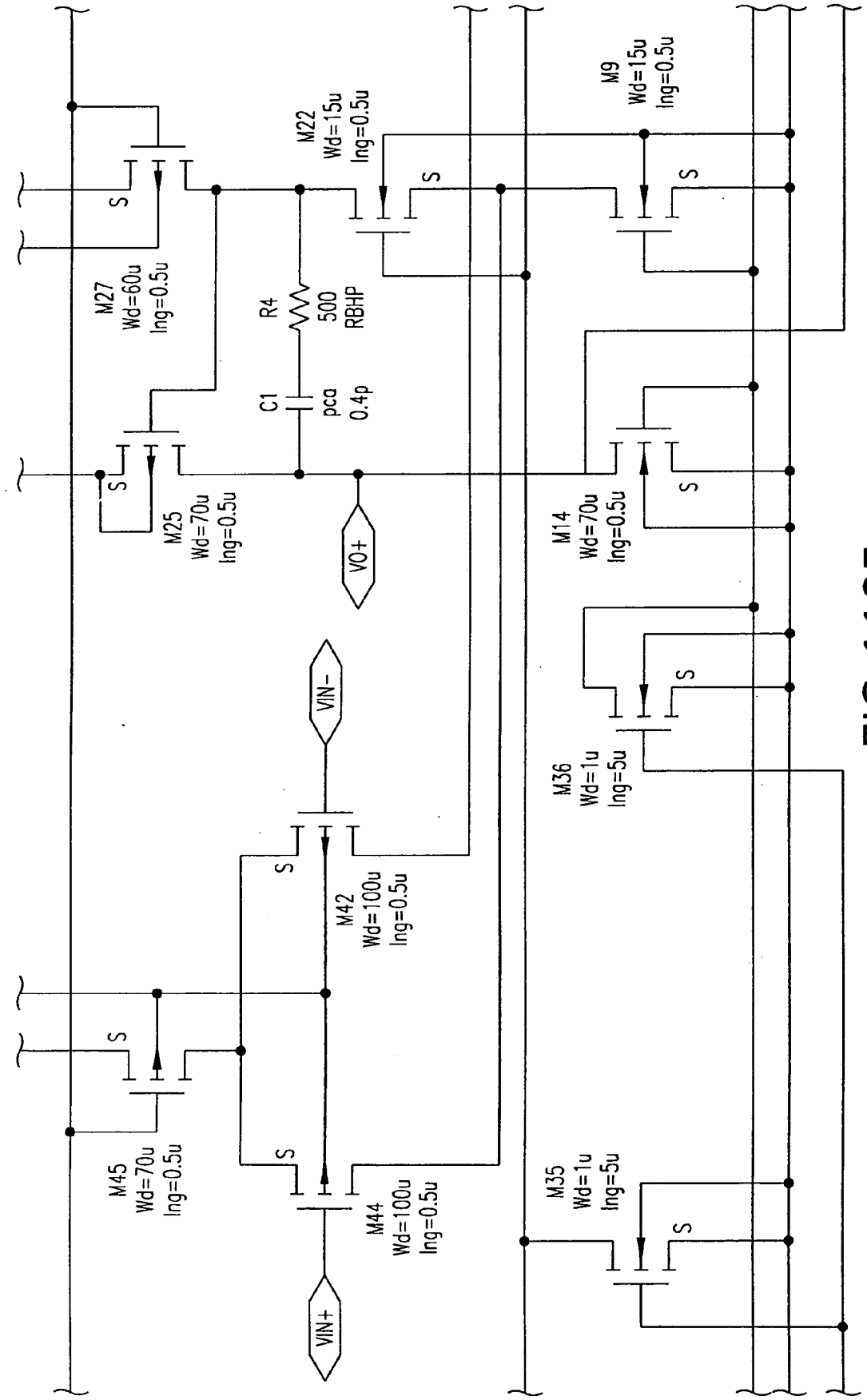
M27
Wd=60u
lng=0.5u
M22
Wd=15u
lng=0.5u
M9
Wd=15u
lng=0.5u
R4
500
RBHP
C1
pca
0.4p
M25
Wd=70u
lng=0.5u
VO+
M14
Wd=70u
lng=0.5u
VIN-
M36
Wd=1u
lng=5u
M42
Wd=100u
lng=0.5u
M45
Wd=70u
lng=0.5u
M44
Wd=100u
lng=0.5u
M35
Wd=1u
lng=5u
VIN+
S

FIG.113E

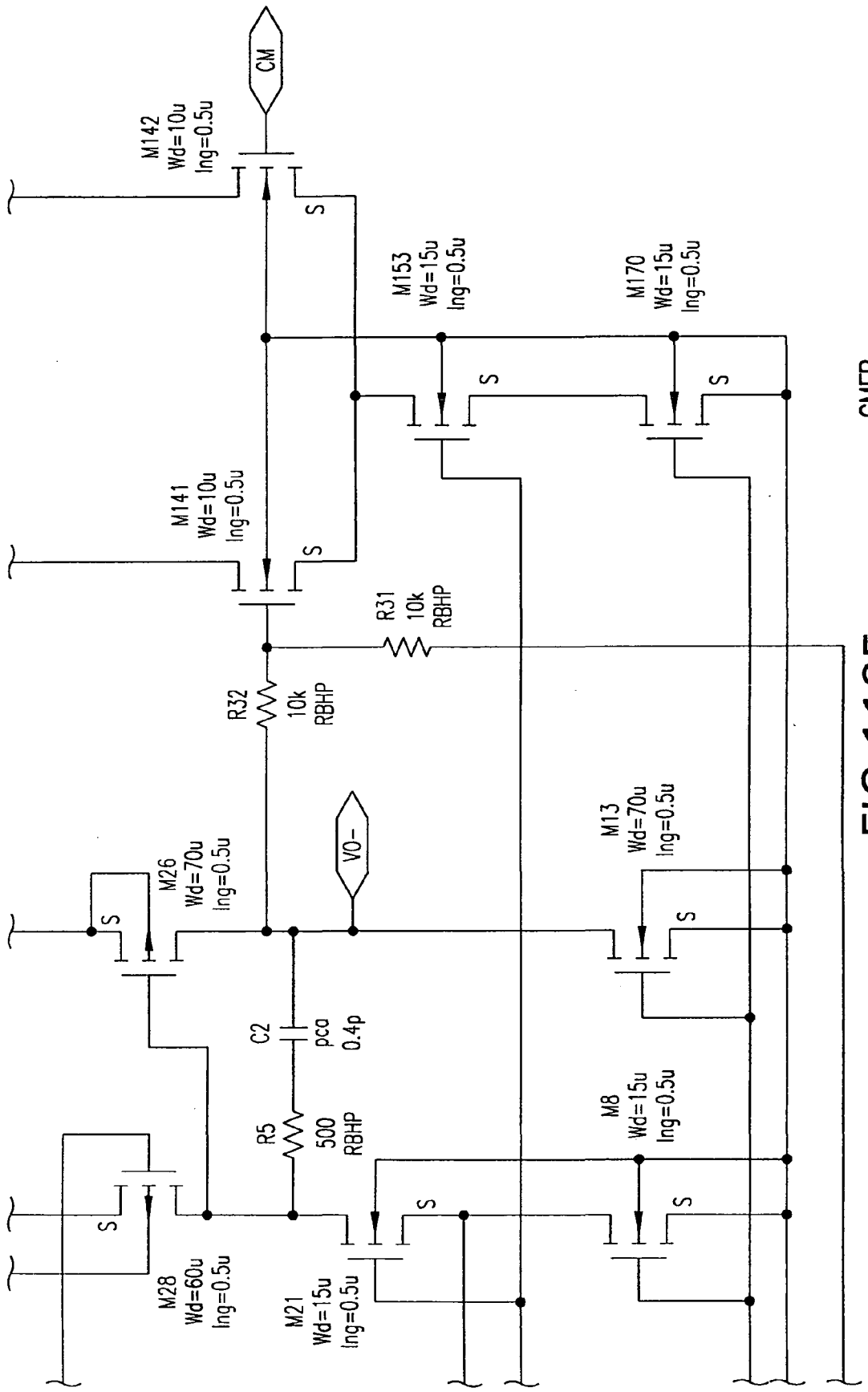
CM
M142
Wd=10u
lng=0.5u
M153
Wd=15u
lng=0.5u
M170
Wd=15u
lng=0.5u
CMFB
M141
Wd=10u
lng=0.5u
R31
10k
RBHP
R32
10k
RBHP
VO-
M26
Wd=70u
lng=0.5u
M13
Wd=70u
lng=0.5u
C2
pca
0.4p
R5
500
RBHP
M8
Wd=15u
lng=0.5u
M28
Wd=60u
lng=0.5u
M21
Wd=15u
lng=0.5u
S

FIG. 113F

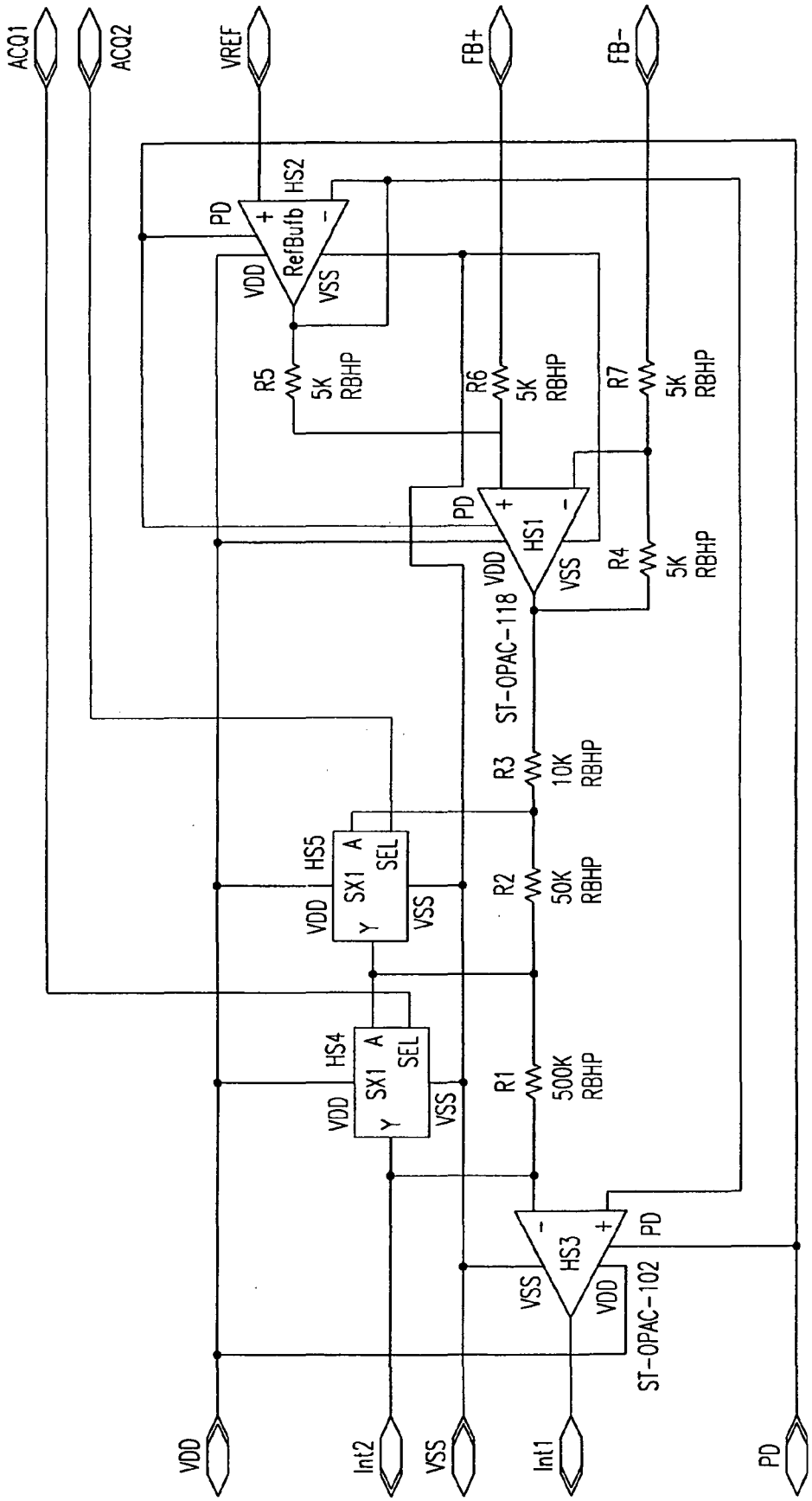
ACQ1
ACQ2
VREF
FB+
FB-
HS2
PD
RefBufb
VDD
VSS
R5
5K
RBHP
R6
5K
RBHP
R7
5K
RBHP
HS1
R4
5K
RBHP
ST-OPAC-118
R3
10K
RBHP
HS5
SX1
A
SEL
Y
R2
50K
RBHP
HS4
R1
500K
RBHP
HS3
ST-OPAC-102
Int2
Int1

FIG. 114

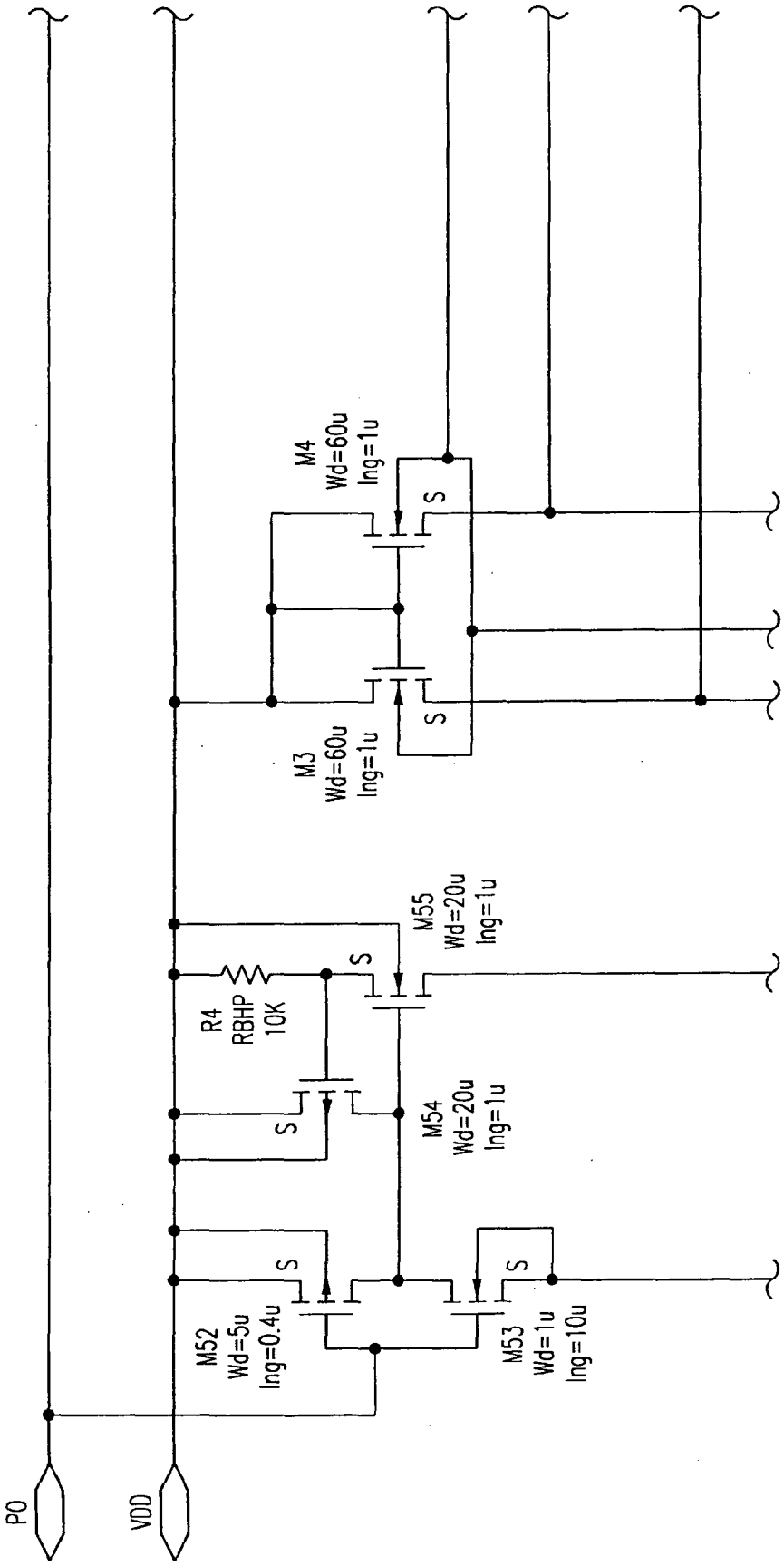
M4
Wd=60u
lng=1u
M3
Wd=60u
lng=1u
M55
Wd=20u
lng=1u
R4
RBHP
10K
M54
Wd=20u
lng=1u
M52
Wd=5u
lng=0.4u
M53
Wd=1u
lng=10u
S
PO
VDD

FIG.115A

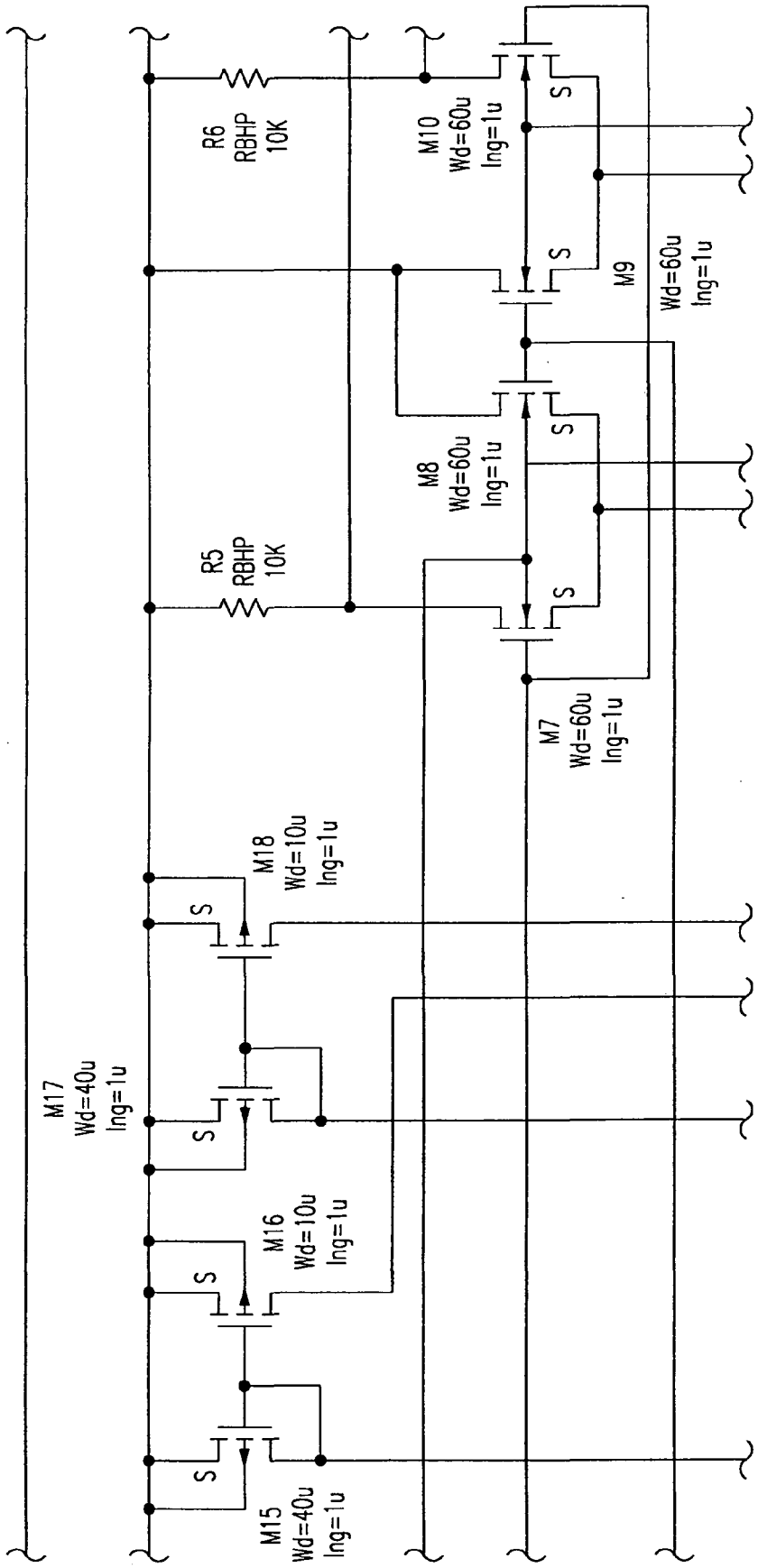
R6
RBHP
10K
R5
RBHP
10K
M10
Wd=60u
lng=1u
M9
Wd=60u
lng=1u
M8
Wd=60u
lng=1u
M7
Wd=60u
lng=1u
M18
Wd=10u
lng=1u
M17
Wd=40u
lng=1u
M16
Wd=10u
lng=1u
M15
Wd=40u
lng=1u
S

FIG.115B

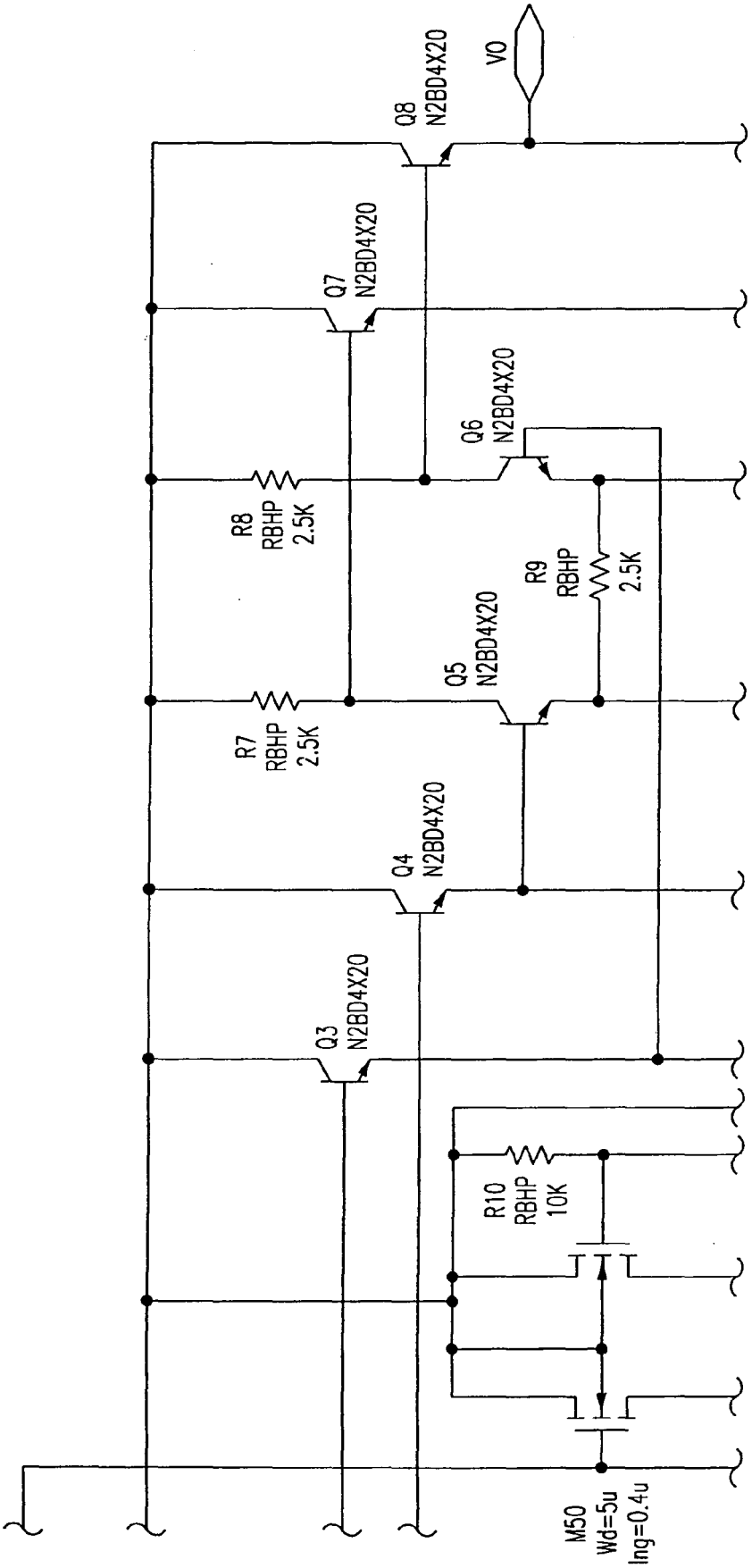
Q8
N2BD4X20
VO
Q7
N2BD4X20
Q6
N2BD4X20
R8
RBHP
2.5K
R9
RBHP
2.5K
Q5
N2BD4X20
R7
RBHP
2.5K
Q4
N2BD4X20
Q3
N2BD4X20
R10
RBHP
10K
M50
Wd=5u
lng=0.4u

FIG. 115C

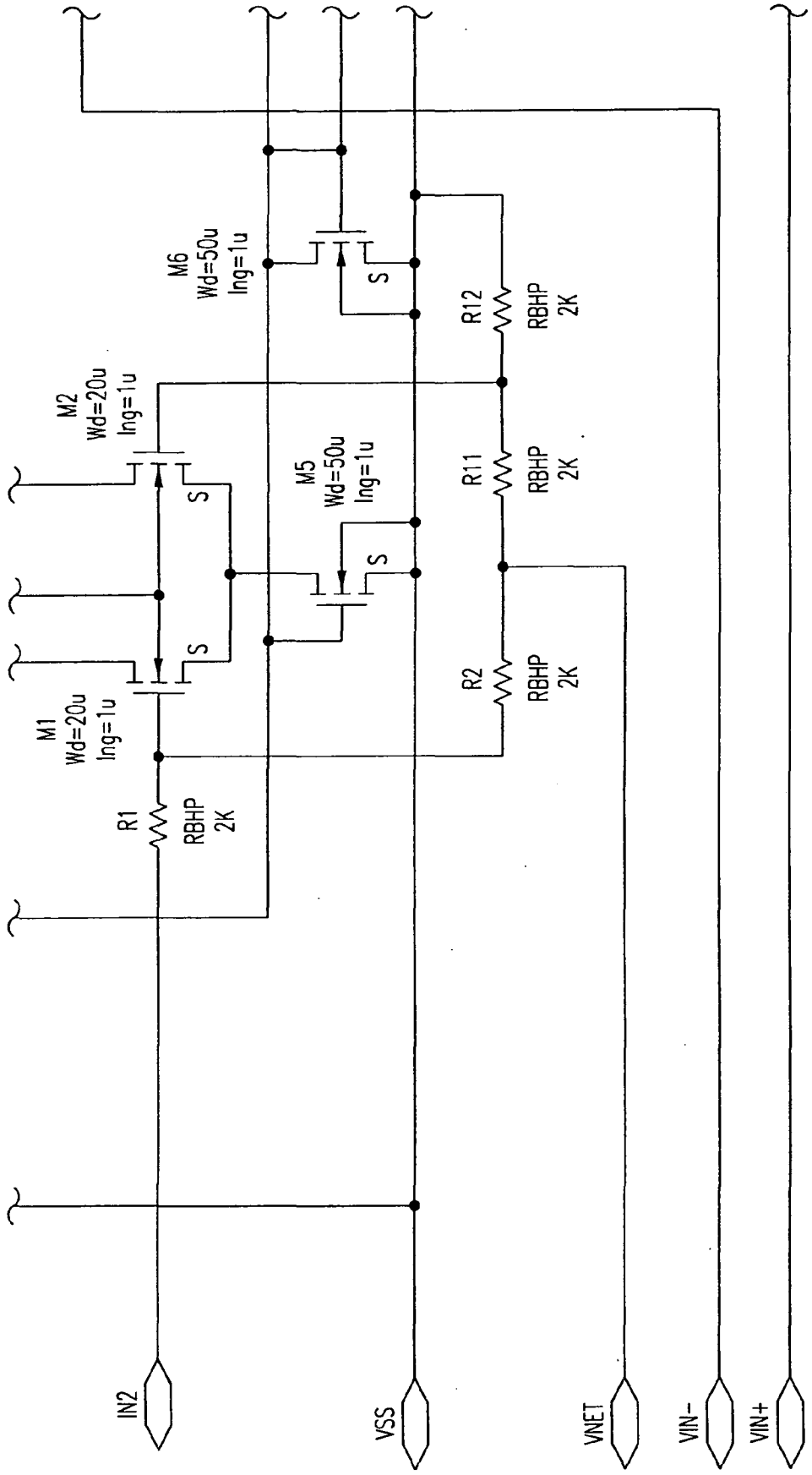
M6
Wd=50u
lng=1u
M2
Wd=20u
lng=1u
M5
Wd=50u
lng=1u
M1
Wd=20u
lng=1u
R1
RBHP
2K
R2
RBHP
2K
R11
RBHP
2K
R12
RBHP
2K
S
IN2
VSS
VNET
VIN-
VIN+

FIG.115D

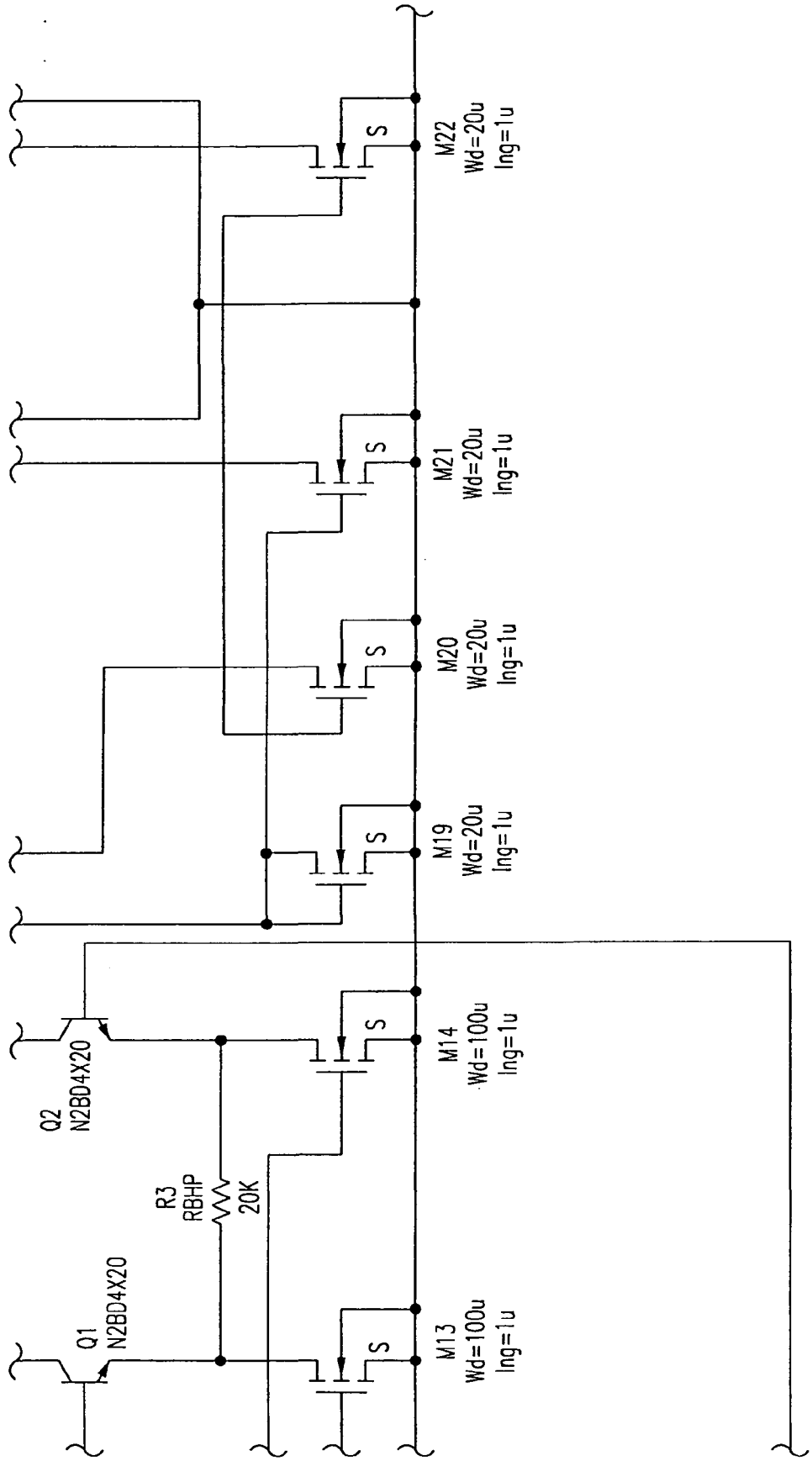
Q1
N2BD4X20
Q2
N2BD4X20
R3
RBHP
20K
M13
Wd=100u
lng=1u
M14
Wd=100u
lng=1u
M19
Wd=20u
lng=1u
M20
Wd=20u
lng=1u
M21
Wd=20u
lng=1u
M22
Wd=20u
lng=1u
S

FIG.115E

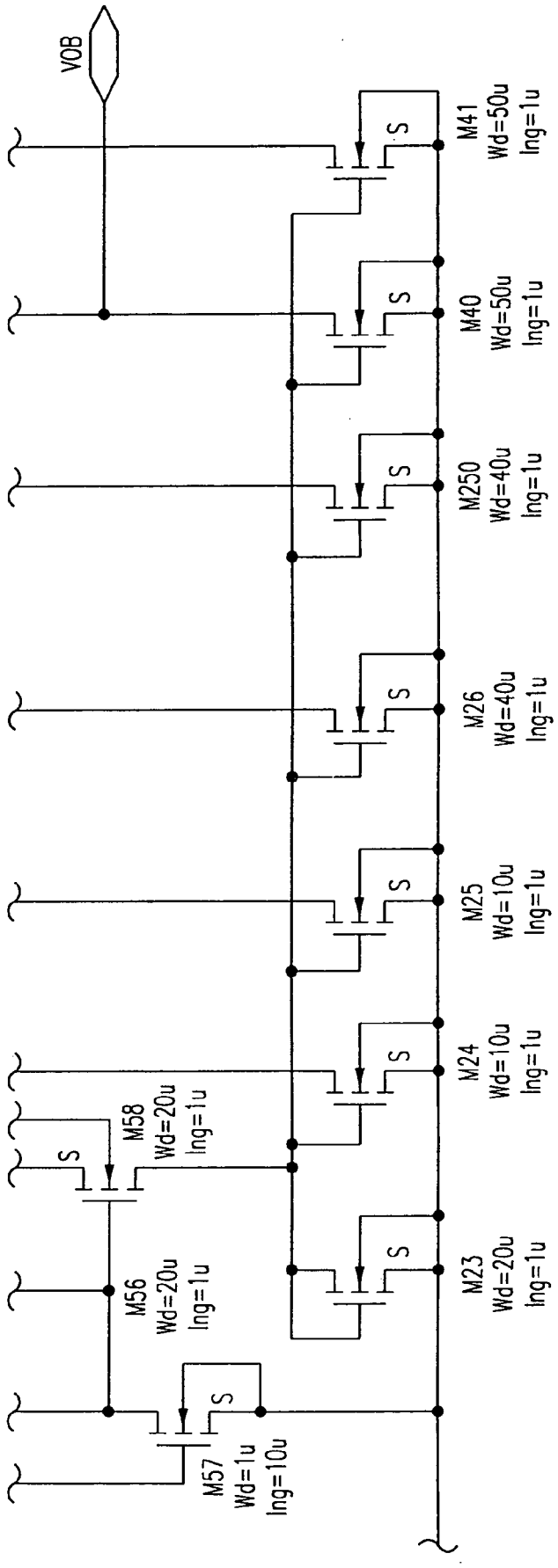
VOB
M41
Wd=50u
lng=1u
M40
Wd=50u
lng=1u
M250
Wd=40u
lng=1u
M26
Wd=40u
lng=1u
M25
Wd=10u
lng=1u
M24
Wd=10u
lng=1u
M23
Wd=20u
lng=1u
M58
Wd=20u
lng=1u
M56
Wd=20u
lng=1u
M57
Wd=1u
lng=10u
S

FIG.115F

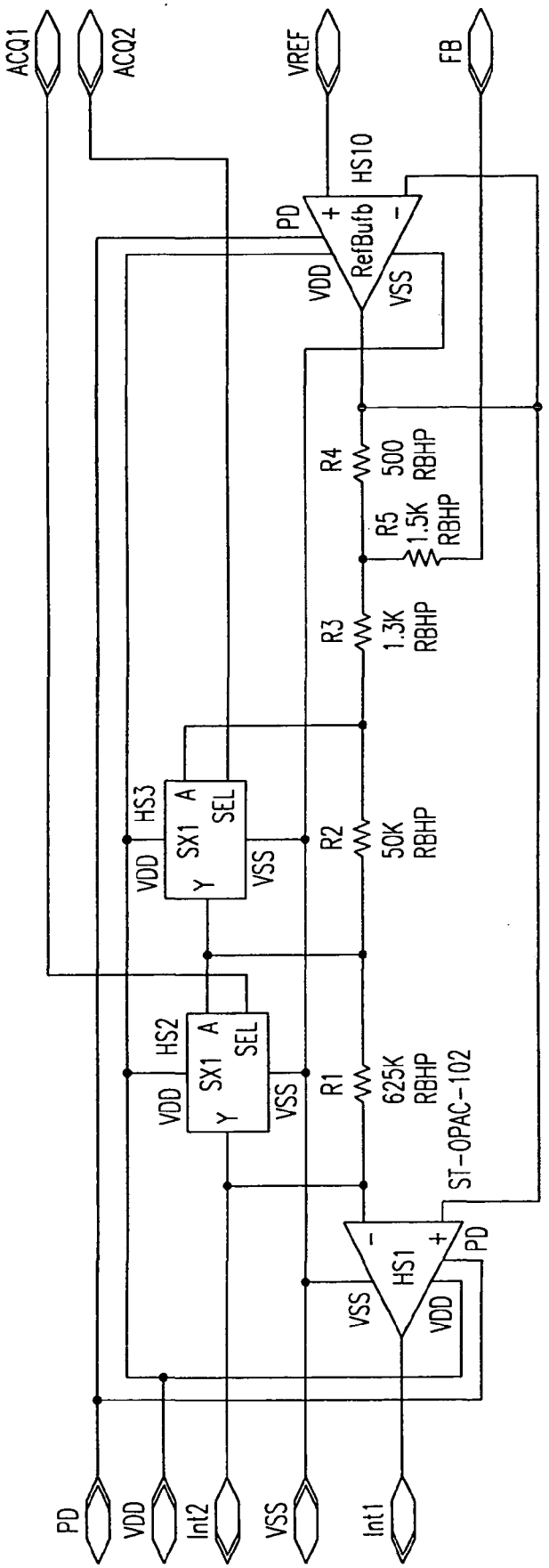
ACQ1
ACQ2
VREF
FB
HS10
PD
RefBufb
VDD
VSS
R4
500
RBHP
R5
1.5K
RBHP
R3
1.3K
RBHP
HS3
SX1
A
SEL
Y
R2
50K
RBHP
HS2
R1
625K
RBHP
ST-OPAC-102
HS1
Int2
Int1

FIG. 116

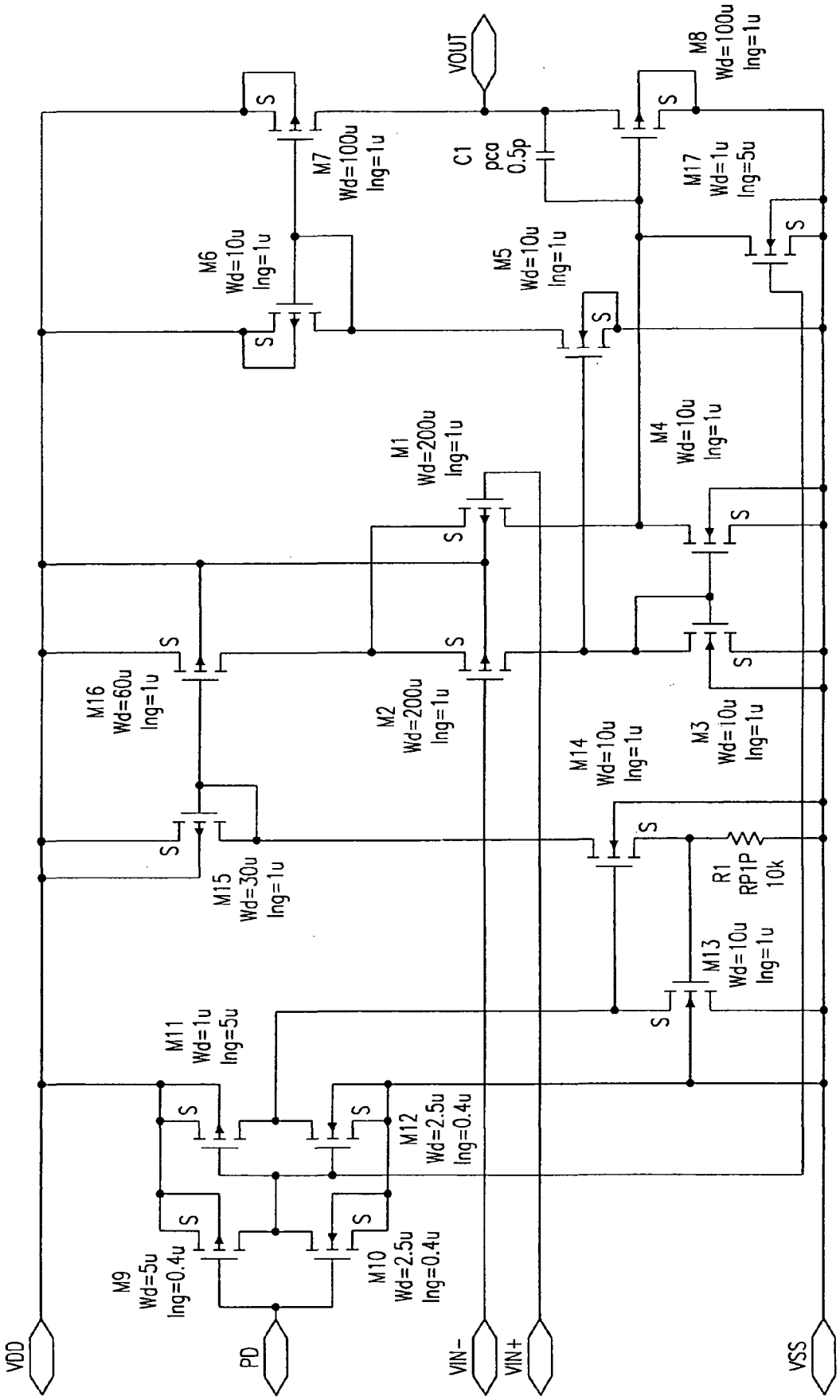
VDD
PD
VIN-
VIN+
VSS
VOUT
M9
Wd=5u
lng=0.4u
M10
Wd=2.5u
lng=0.4u
M11
Wd=1u
lng=5u
M12
Wd=2.5u
lng=0.4u
M13
Wd=10u
lng=1u
R1
RP1P
10k
M14
Wd=10u
lng=1u
M15
Wd=30u
lng=1u
M16
Wd=60u
lng=1u
M2
Wd=200u
lng=1u
M3
Wd=10u
lng=1u
M1
Wd=200u
lng=1u
M4
Wd=10u
lng=1u
M5
Wd=10u
lng=1u
M6
Wd=10u
lng=1u
M7
Wd=100u
lng=1u
C1
pca
0.5p
M17
Wd=1u
lng=5u
M8
Wd=100u
lng=1u
S

FIG.117

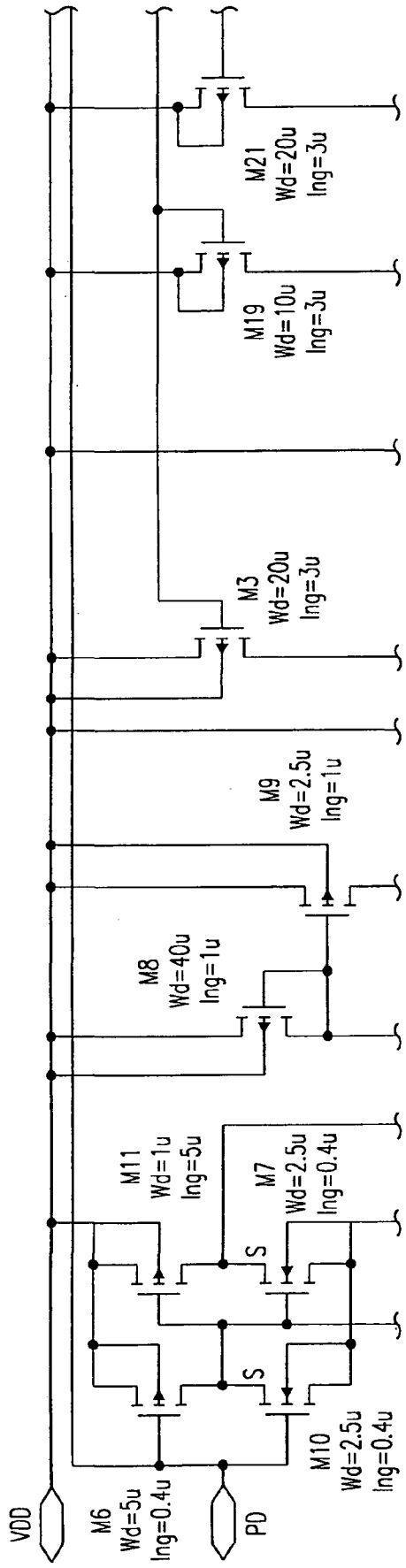
VDD
M6
Wd=5u
lng=0.4u
PD
M10
Wd=2.5u
lng=0.4u
S
S
M11
Wd=1u
lng=5u
M7
Wd=2.5u
lng=0.4u
M8
Wd=40u
lng=1u
M9
Wd=2.5u
lng=1u
M3
Wd=20u
lng=3u
M19
Wd=10u
lng=3u
M21
Wd=20u
lng=3u

FIG.118A

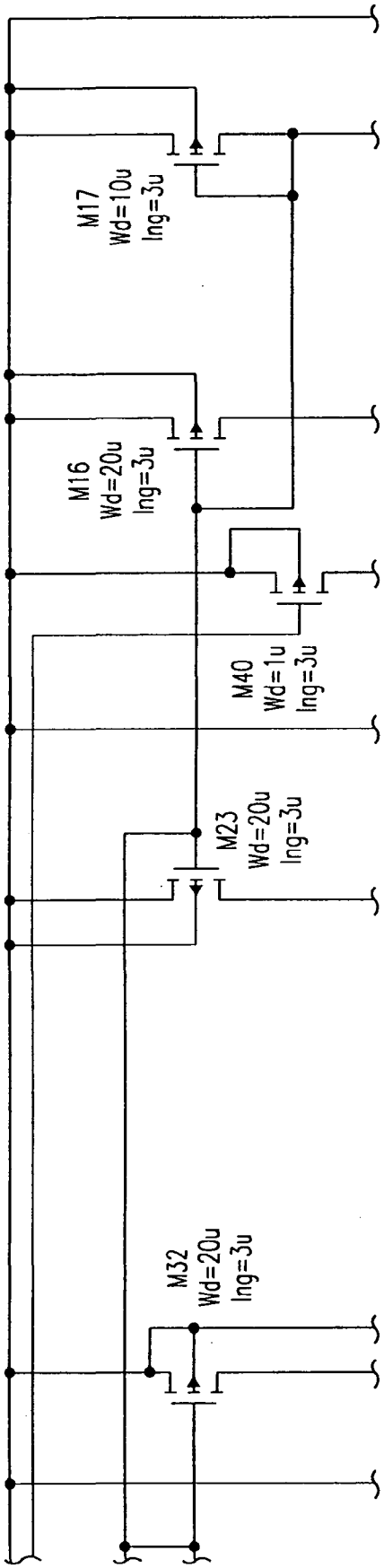
M17
Wd=10u
lng=3u
M16
Wd=20u
lng=3u
M40
Wd=1u
lng=3u
M23
Wd=20u
lng=3u
M32
Wd=20u
lng=3u

FIG. 118B

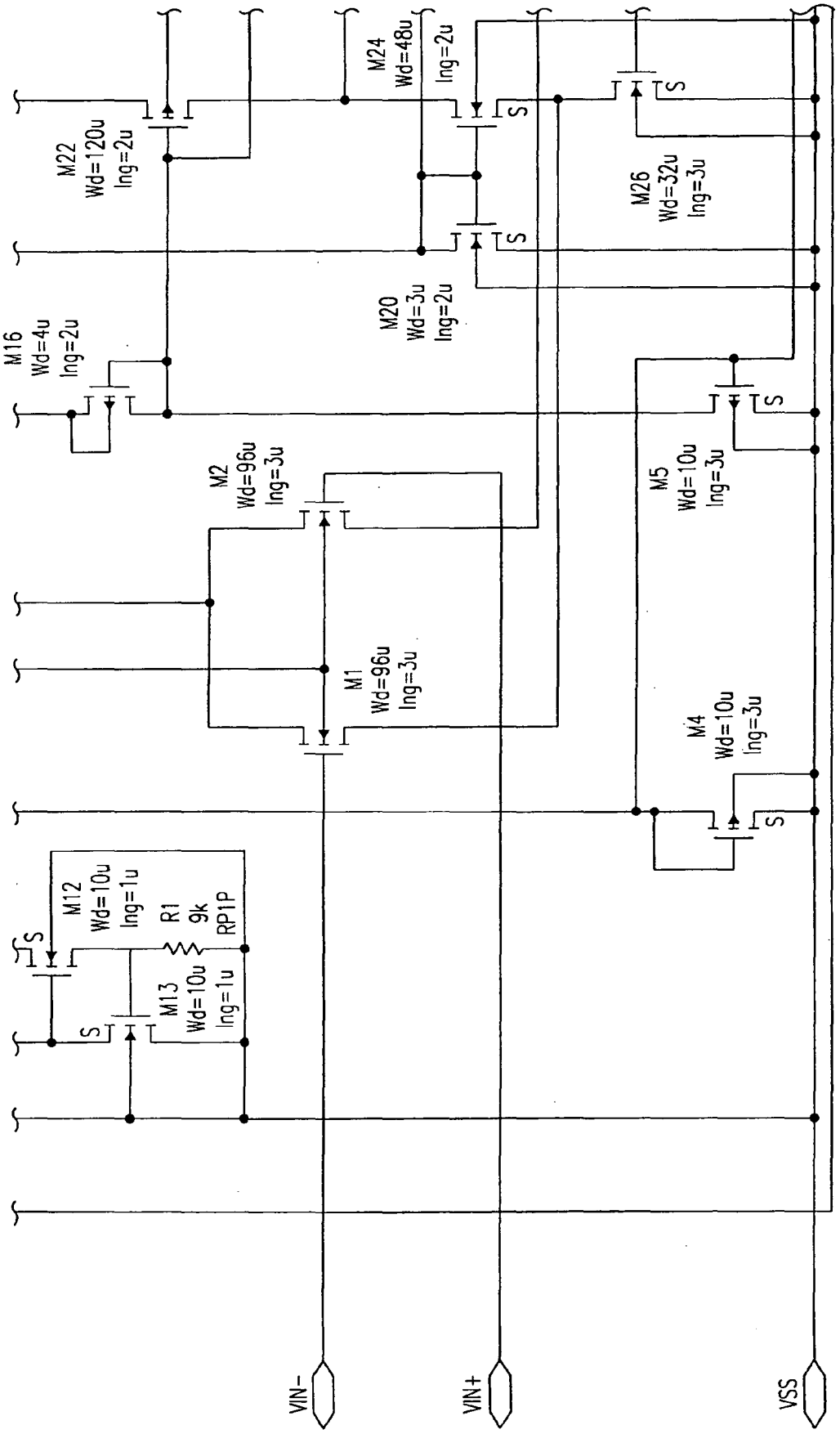
M22
Wd=120u
lng=2u
M24
Wd=48u
lng=2u
M26
Wd=32u
lng=3u
M20
Wd=3u
lng=2u
M16
Wd=4u
lng=2u
M2
Wd=96u
lng=3u
M5
Wd=10u
lng=3u
M1
Wd=96u
lng=3u
M4
Wd=10u
lng=3u
M12
Wd=10u
lng=1u
R1
9k
RP1P
M13
Wd=10u
lng=1u
S
VIN-
VIN+
VSS

FIG.118C

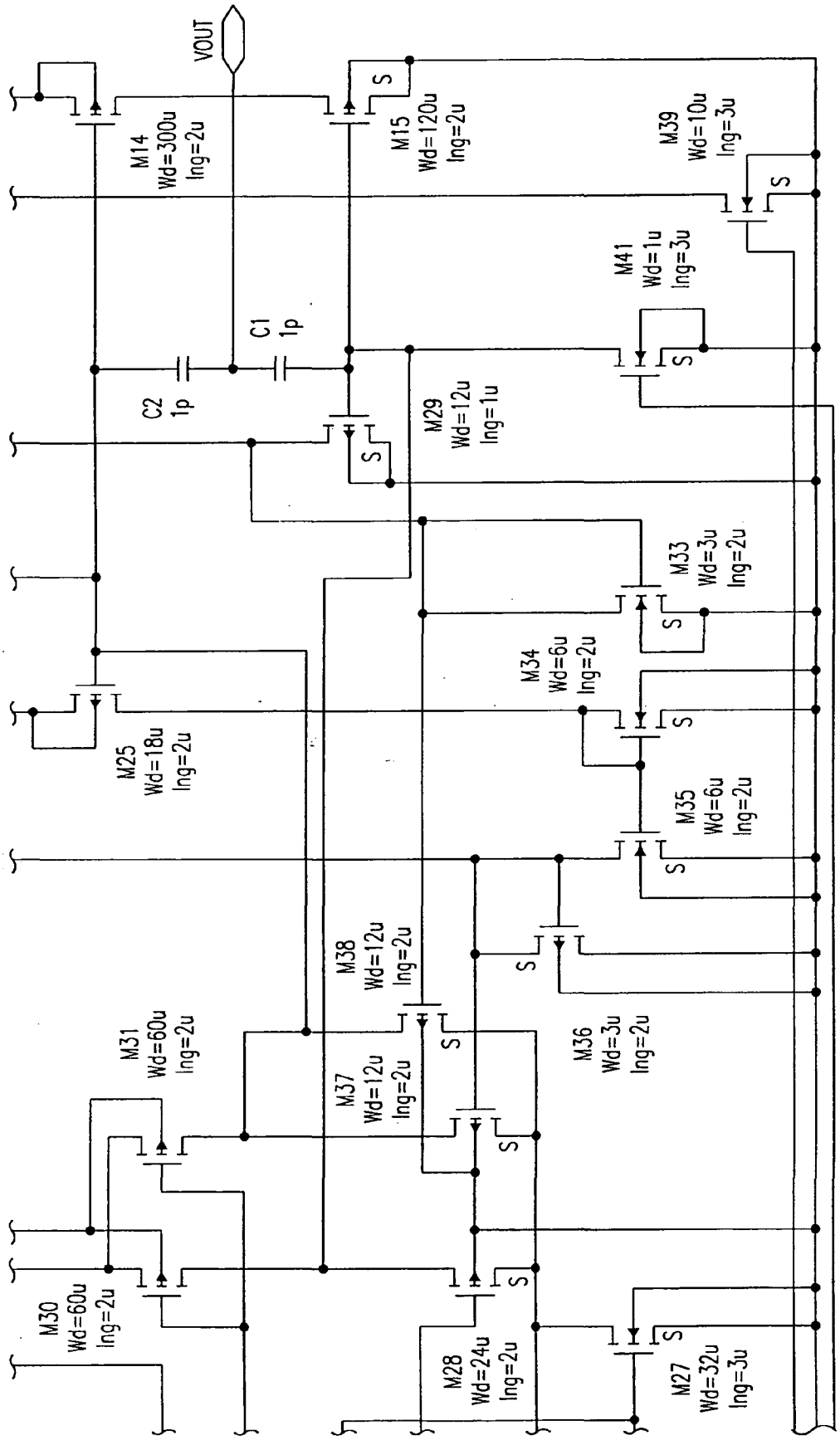
VOUT
M14
Wd=300u
lng=2u
M15
Wd=120u
lng=2u
M39
Wd=10u
lng=3u
M41
Wd=1u
lng=3u
C1
1p
C2
1p
M29
Wd=12u
lng=1u
M33
Wd=3u
lng=2u
M34
Wd=6u
lng=2u
M25
Wd=18u
lng=2u
M35
Wd=6u
lng=2u
M38
Wd=12u
lng=2u
M31
Wd=60u
lng=2u
M37
Wd=12u
lng=2u
M36
Wd=3u
lng=2u
M30
Wd=60u
lng=2u
M28
Wd=24u
lng=2u
M27
Wd=32u
lng=3u
S

FIG.118D

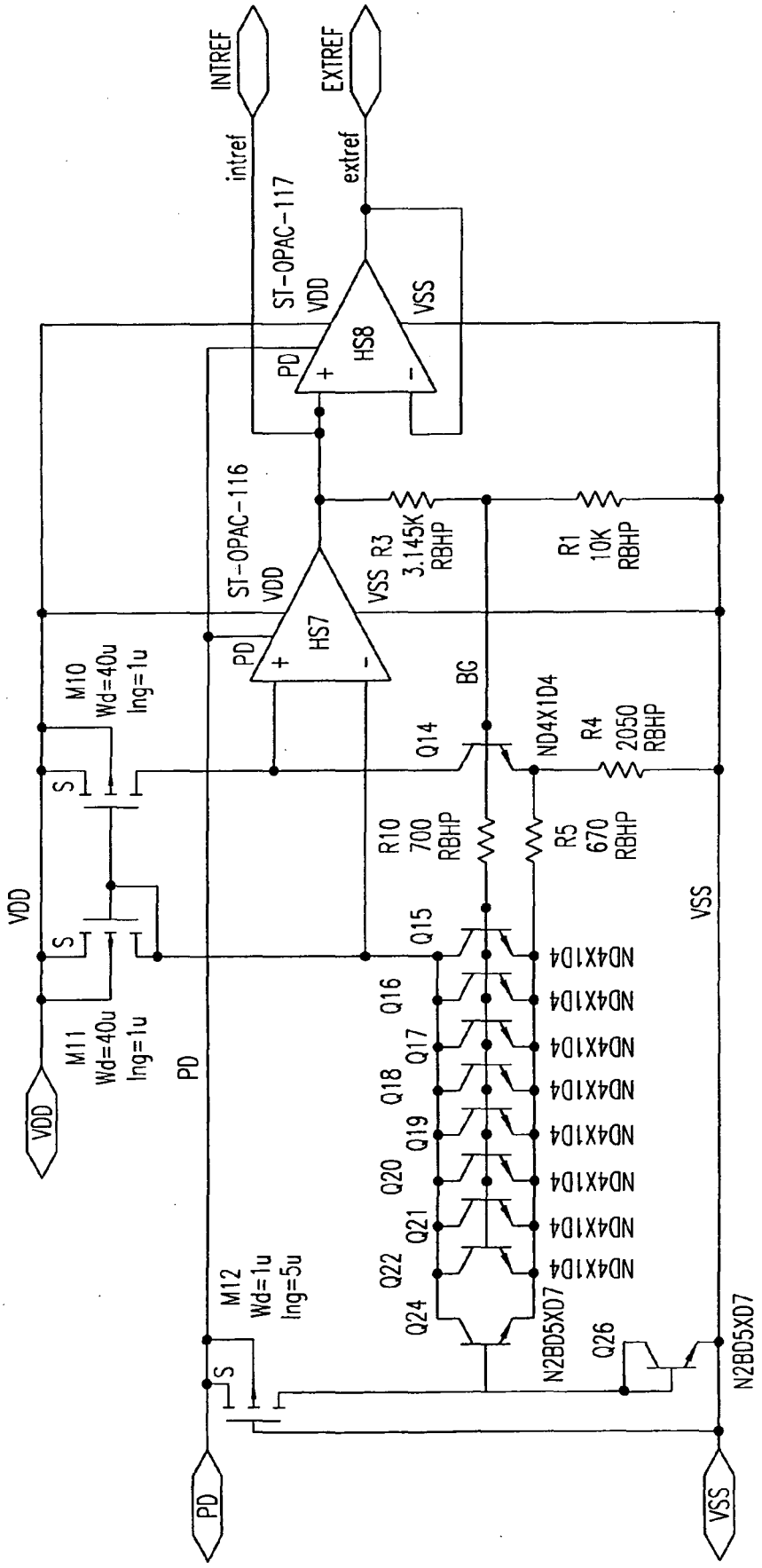
INTREF
EXTREF
intref
extref
ST-OPAC-117
VDD
VSS
HS8
PD
ST-OPAC-116
HS7
R3
3.145K
RBHP
R1
10K
RBHP
M10
Wd=40u
lng=1u
M11
Wd=40u
lng=1u
BG
Q14
ND4X1D4
R4
2050
RBHP
R10
700
RBHP
R5
670
RBHP
Q15
Q16
Q17
Q18
Q19
Q20
Q21
Q22
Q24
Q26
N2BD5XD7
M12
Wd=1u
lng=5u
S

FIG.119

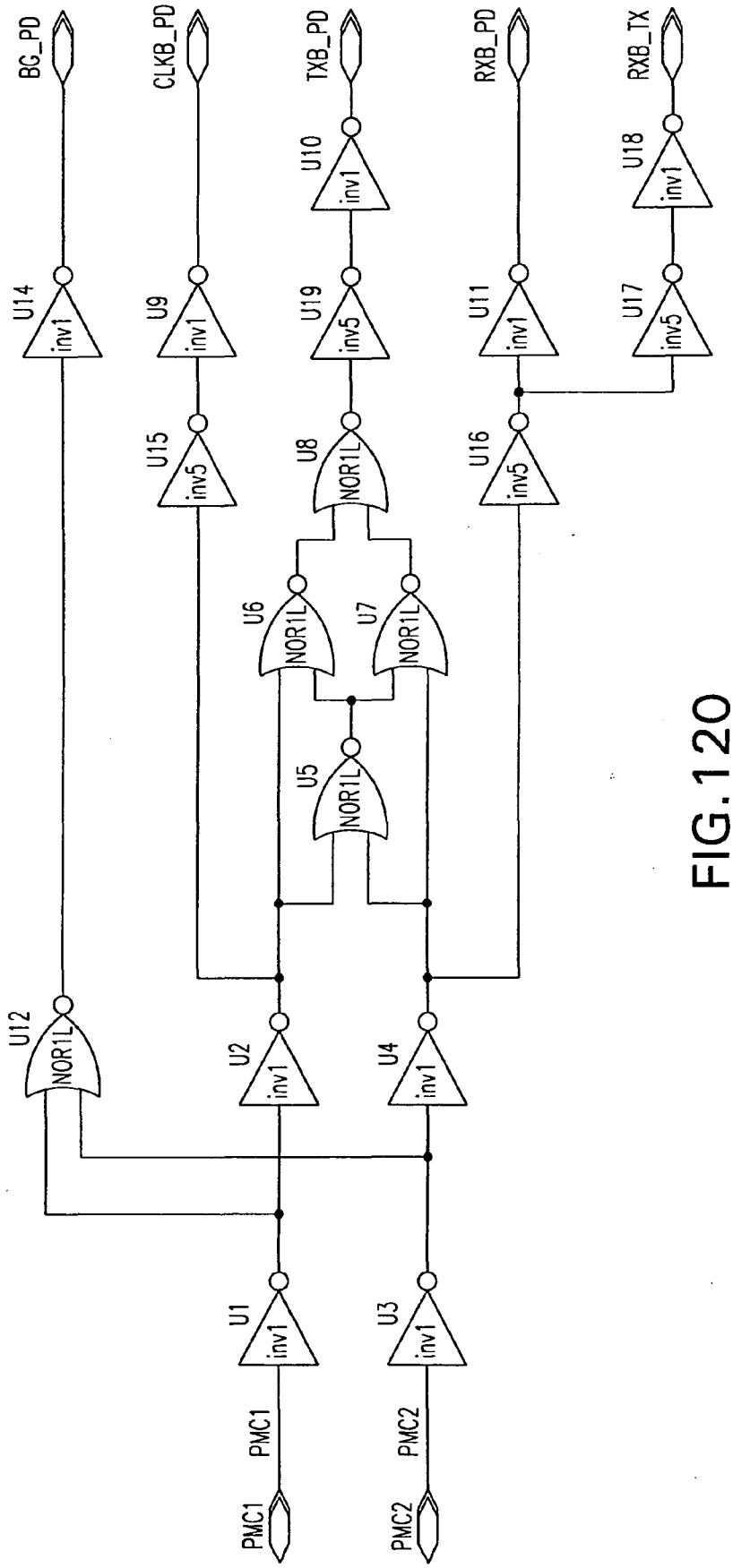
BG_PD
CLKB_PD
TXB_PD
RXB_PD
RXB_TX
U14
inv1
U9
inv1
U10
inv1
U11
inv1
U18
inv1
U15
inv5
U19
inv5
U17
inv5
U8
NOR1L
U16
inv5
U6
NOR1L
U7
NOR1L
U5
NOR1L
U12
NOR1L
U2
inv1
U4
inv1
U1
inv1
U3
inv1
PMC1
PMC2
PMC1
PMC2

FIG.120

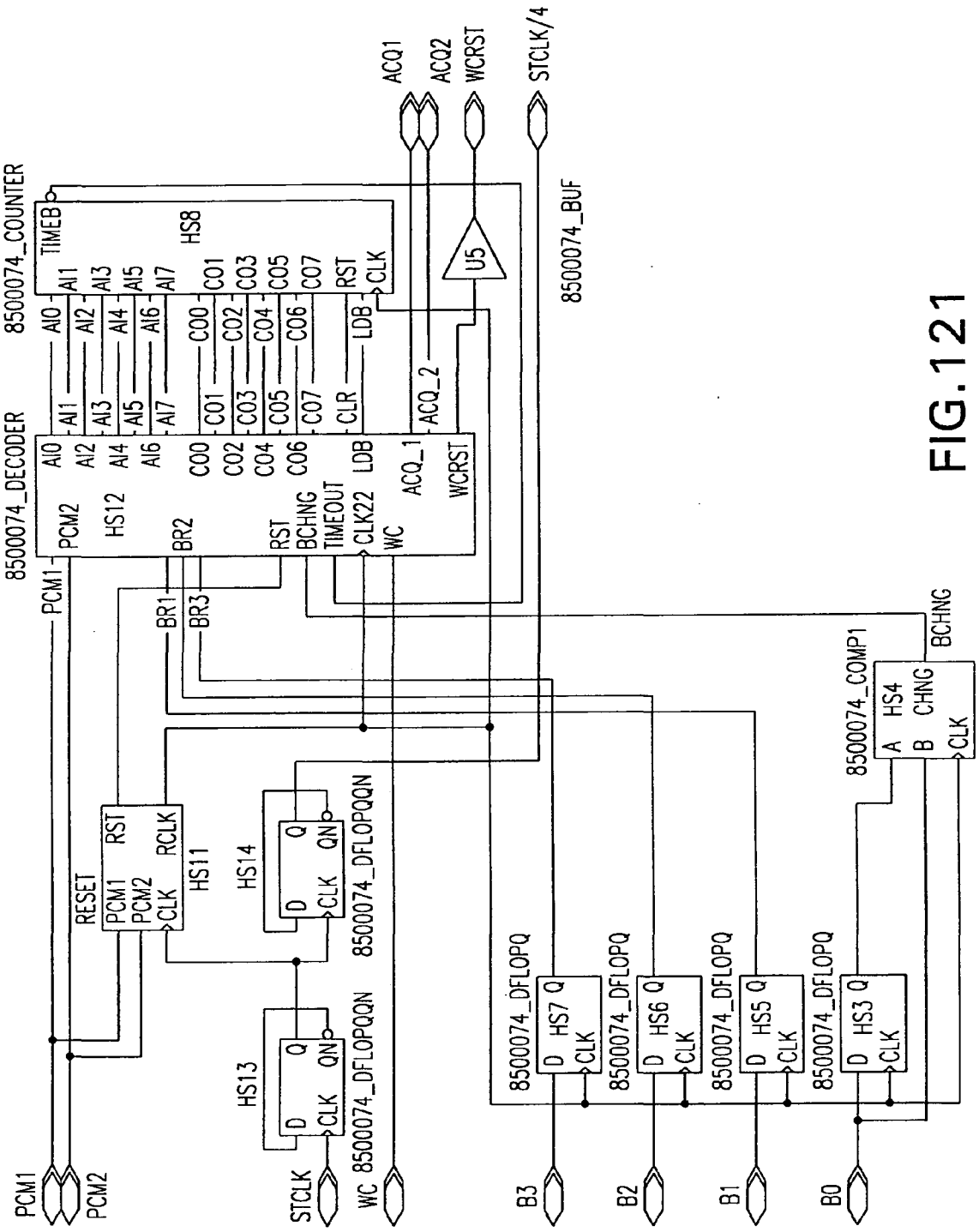
8500074_COUNTER
TIMEB
HS8
AI0
AI1
AI2
AI3
AI4
AI5
AI6
AI7
CO0
CO1
CO2
CO3
CO4
CO5
CO6
CO7
RST
CLK
LDB
8500074_DECODER
PCM1
PCM2
HS12
BR1
BR2
BR3
RST
BCHNG
TIMEOUT
CLK22
WC
ACQ_1
ACQ_2
WCRST
ACQ1
ACQ2
WCRST
STCLK/4
U5
8500074_BUF
RESET
HS11
RCLK
HS13
HS14
8500074_DFLOPQQN
8500074_DFLOPQ
HS7
HS6
HS5
HS3
8500074_COMP1
HS4
A
B
CHNG
BCHNG
STCLK
WC
B3
B2
B1
B0

FIG. 121

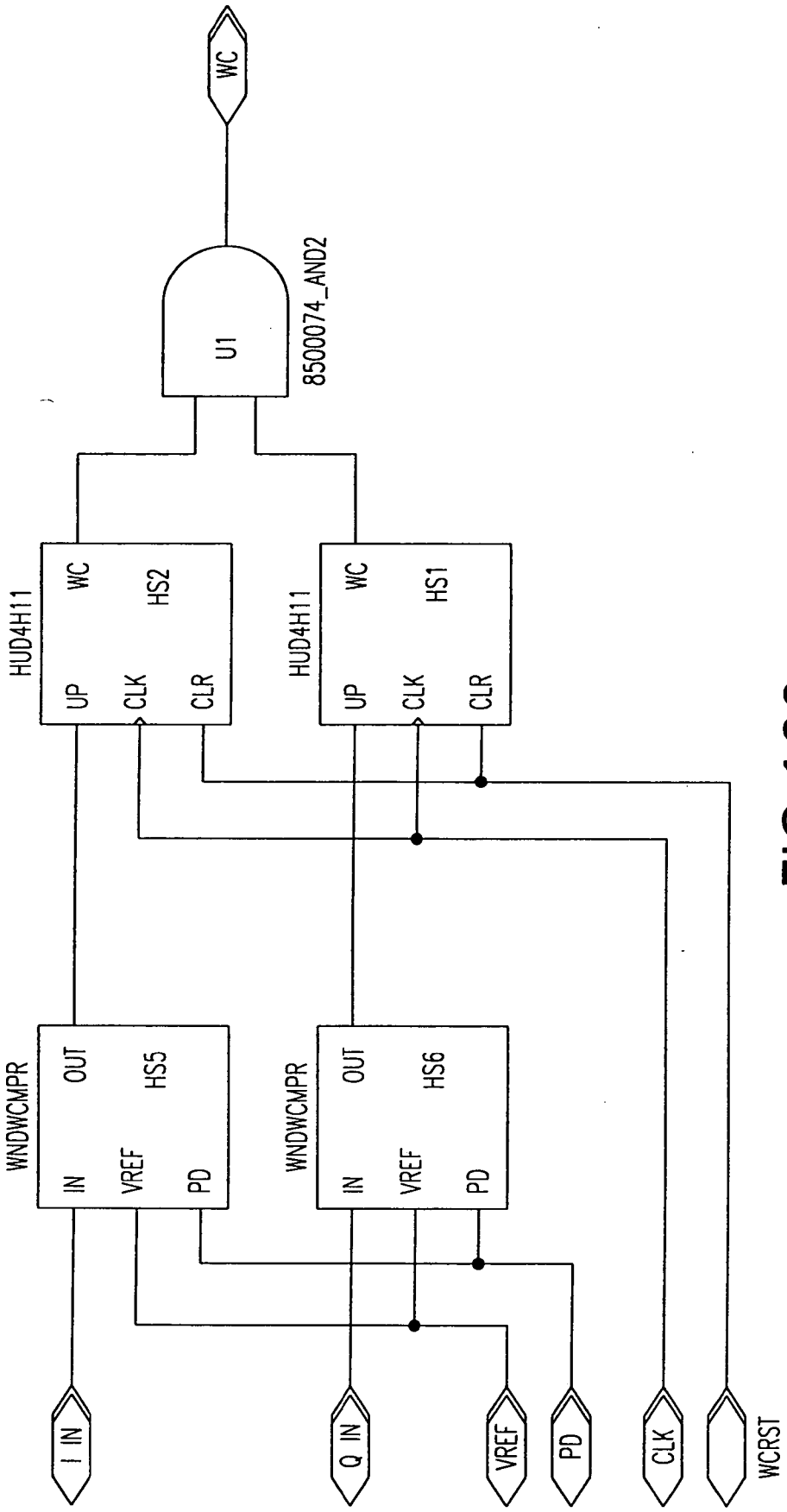
WC
U1
8500074_AND2
HUD4H11
WC
HS2
UP
CLK
CLR
HUD4H11
WC
HS1
UP
CLK
CLR
WNDWCMPR
OUT
HS5
IN
VREF
PD
WNDWCMPR
OUT
HS6
IN
VREF
PD
I IN
Q IN
VREF
PD
CLK
WCRST

FIG.122

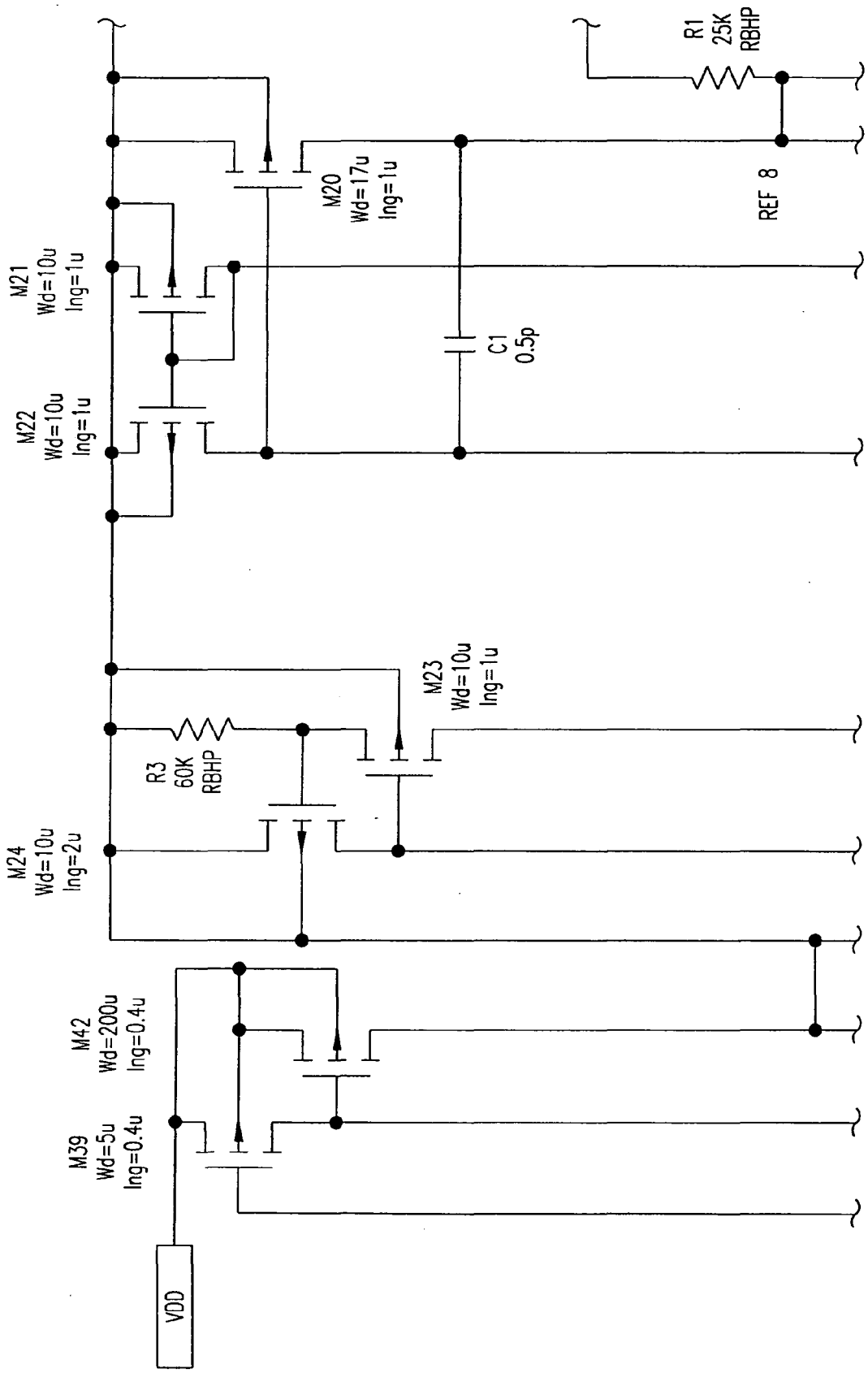
R1
25K
RBHP
M20
Wd=17u
lng=1u
REF 8
M21
Wd=10u
lng=1u
C1
0.5p
M22
Wd=10u
lng=1u
M23
Wd=10u
lng=1u
R3
60K
RBHP
M24
Wd=10u
lng=2u
M42
Wd=200u
lng=0.4u
M39
Wd=5u
lng=0.4u
VDD

FIG. 123A

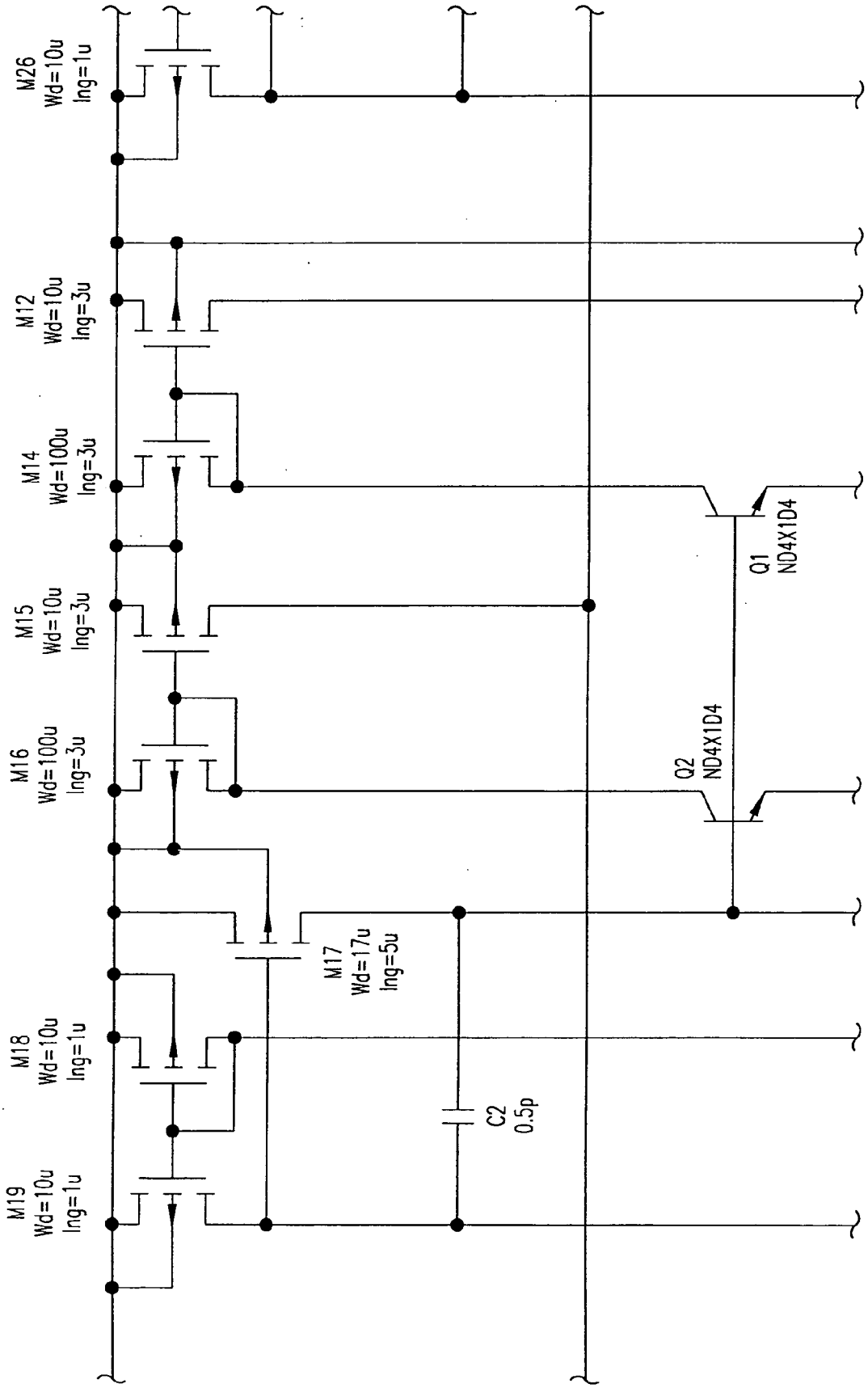
M26
Wd=10u
lng=1u
M12
Wd=10u
lng=3u
M14
Wd=100u
lng=3u
M15
Wd=10u
lng=3u
M16
Wd=100u
lng=3u
M17
Wd=17u
lng=5u
M18
Wd=10u
lng=1u
M19
Wd=10u
lng=1u
C2
0.5p
Q1
ND4X1D4
Q2
ND4X1D4

FIG.123B

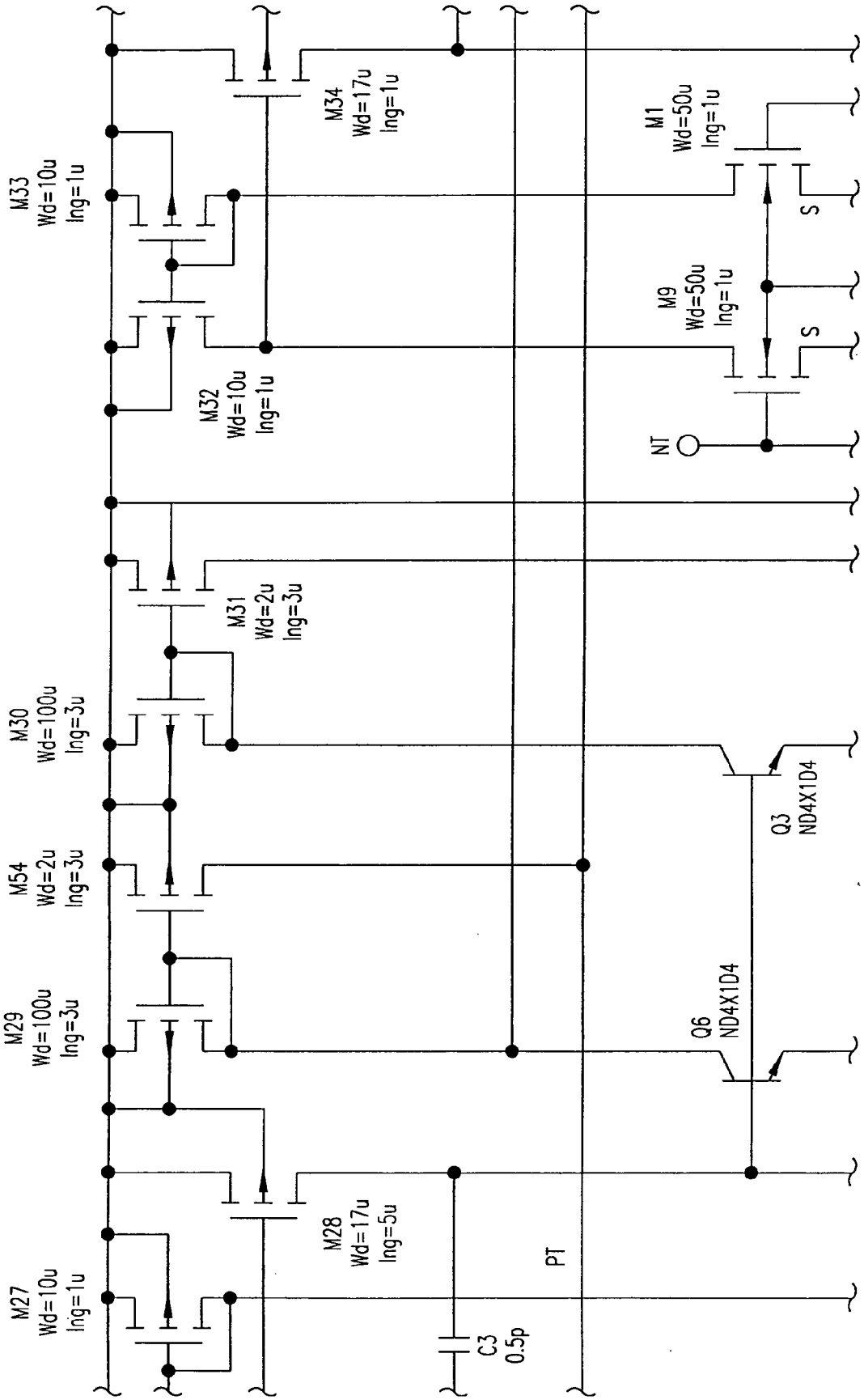
M33
Wd=10u
lng=1u
M34
Wd=17u
lng=1u
M1
Wd=50u
lng=1u
S
M9
Wd=50u
lng=1u
S
M32
Wd=10u
lng=1u
NT
M31
Wd=2u
lng=3u
M30
Wd=100u
lng=3u
Q3
ND4X1D4
M54
Wd=2u
lng=3u
M29
Wd=100u
lng=3u
Q6
ND4X1D4
M28
Wd=17u
lng=5u
PT
M27
Wd=10u
lng=1u
C3
0.5p

FIG. 123C

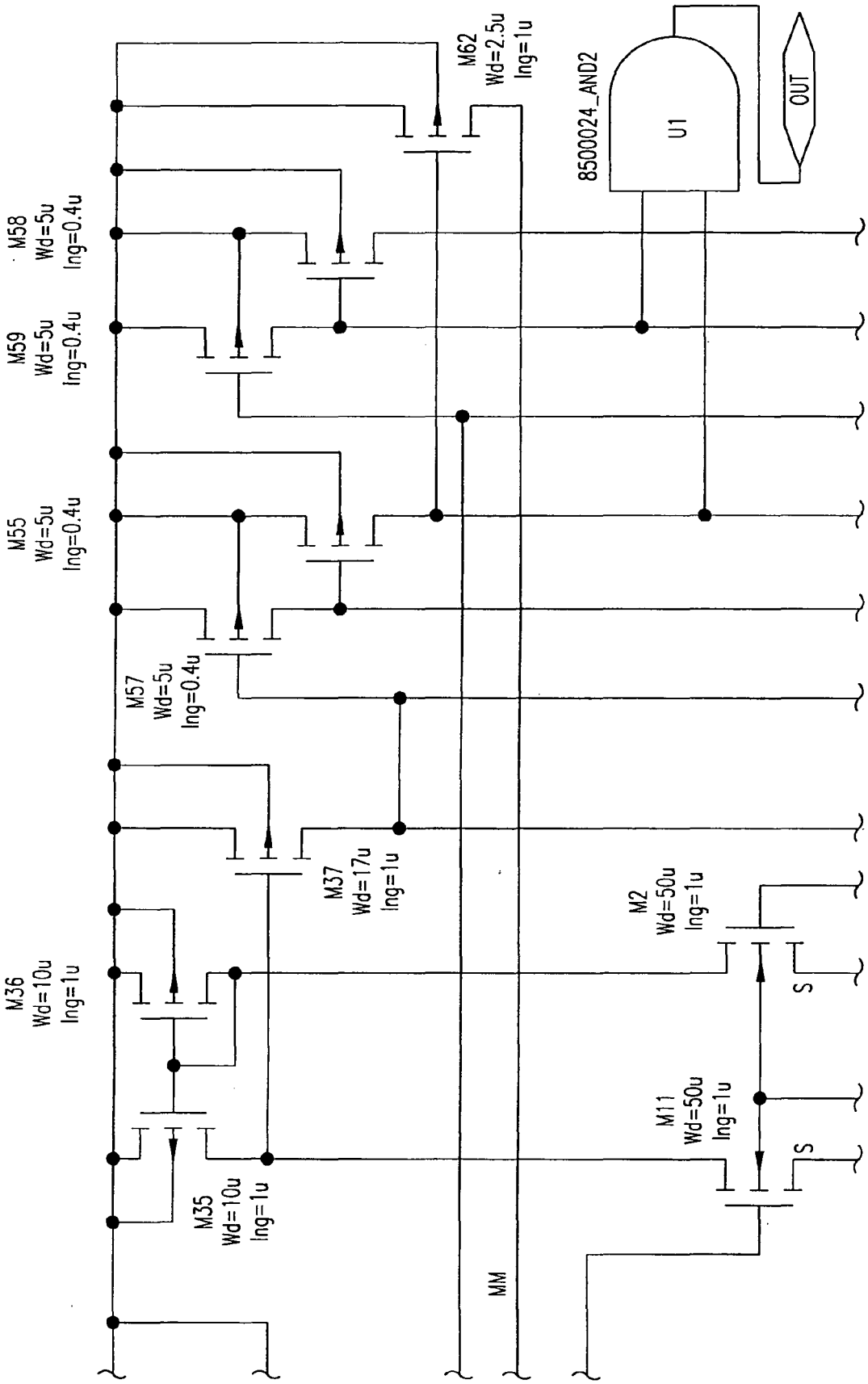
M62
Wd=2.5u
lng=1u
8500024_AND2
U1
OUT
M58
Wd=5u
lng=0.4u
M59
Wd=5u
lng=0.4u
M55
Wd=5u
lng=0.4u
M57
Wd=5u
lng=0.4u
M37
Wd=17u
lng=1u
M2
Wd=50u
lng=1u
S
M36
Wd=10u
lng=1u
M11
Wd=50u
lng=1u
S
M35
Wd=10u
lng=1u
MM

FIG.123D

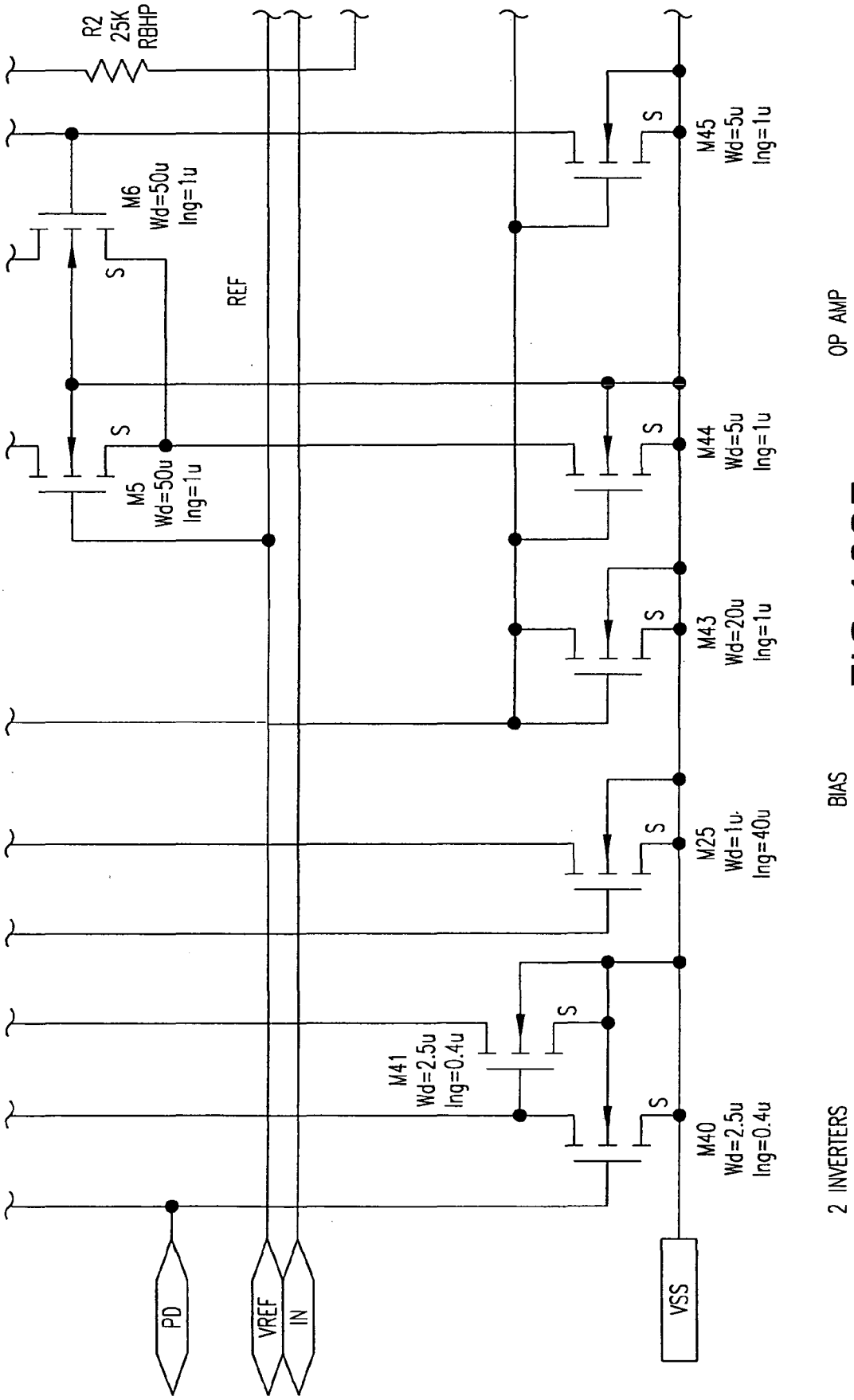
R2
25K
RBHP
M6
Wd=50u
lng=1u
M5
Wd=50u
lng=1u
REF
M45
Wd=5u
lng=1u
M44
Wd=5u
lng=1u
M43
Wd=20u
lng=1u
M25
Wd=1u
lng=40u
M41
Wd=2.5u
lng=0.4u
M40
Wd=2.5u
lng=0.4u
S
PD
VREF
IN
VSS
OP AMP
BIAS
2 INVERTERS

FIG. 123E

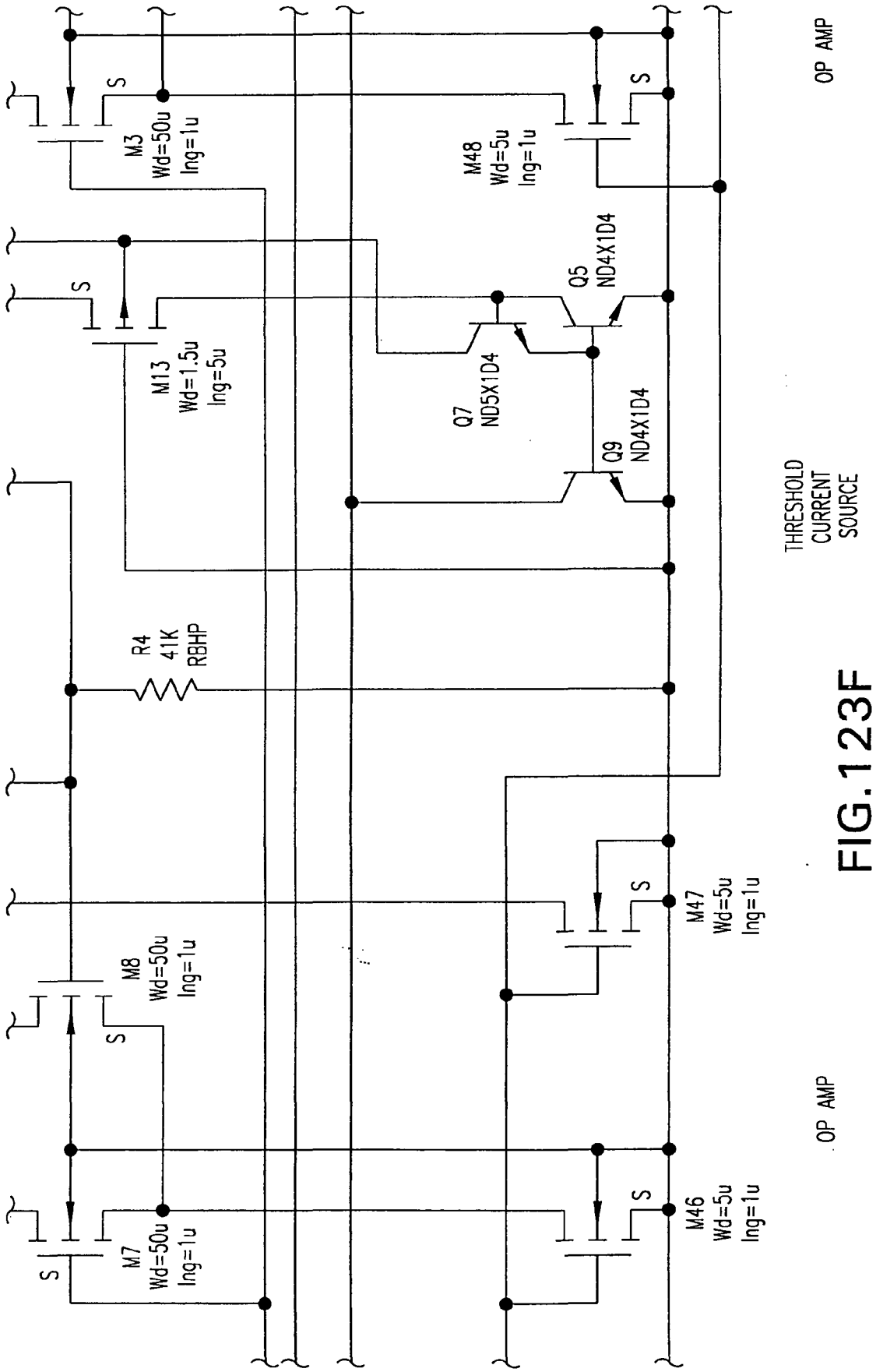
OP AMP
M3
Wd=50u
lng=1u
M48
Wd=5u
lng=1u
Q5
ND4X1D4
M13
Wd=1.5u
lng=5u
Q7
ND5X1D4
Q9
ND4X1D4
THRESHOLD
CURRENT
SOURCE
R4
41K
RBHP
M47
Wd=5u
lng=1u
M8
Wd=50u
lng=1u
OP AMP
M46
Wd=5u
lng=1u
M7
Wd=50u
lng=1u
S

FIG.123F

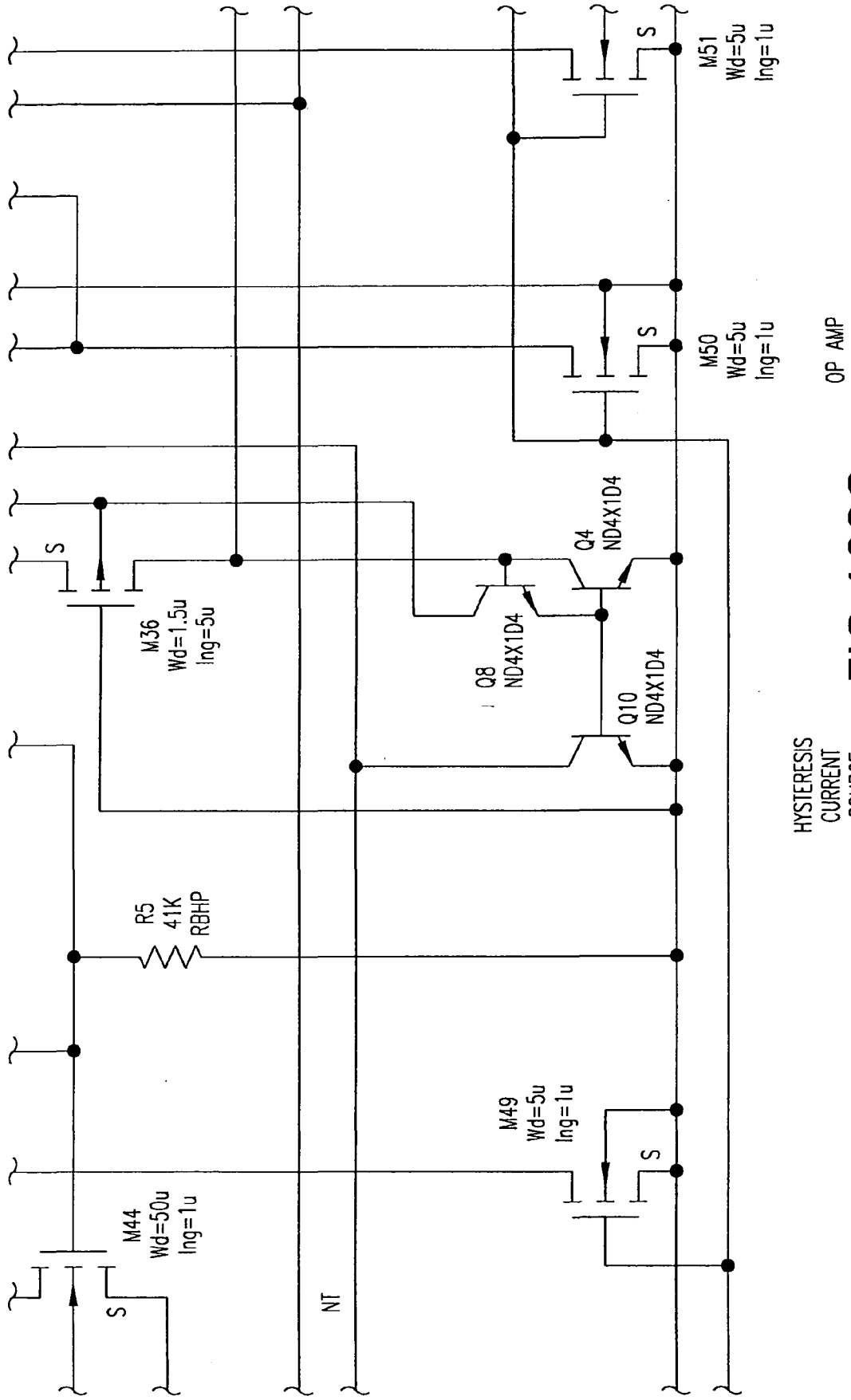
M51
Wd=5u
lng=1u
S
M50
Wd=5u
lng=1u
S
OP AMP
Q4
ND4X1D4
Q8
ND4X1D4
Q10
ND4X1D4
M36
Wd=1.5u
lng=5u
S
HYSTERESIS
CURRENT
SOURCE
R5
41K
RBHP
M49
Wd=5u
lng=1u
S
M44
Wd=50u
lng=1u
S
NT

FIG.123G

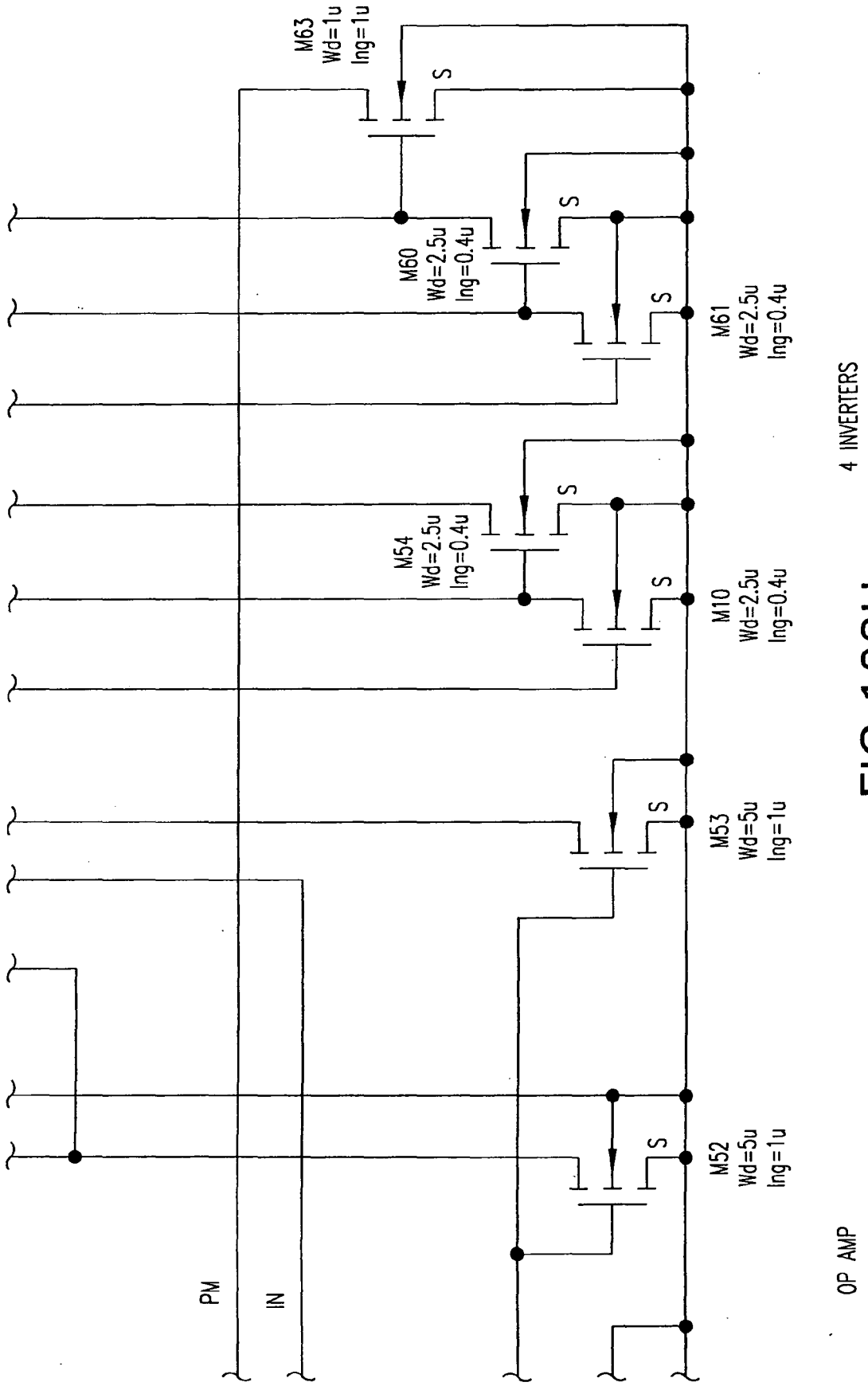
M63
Wd=1u
lng=1u
S
M60
Wd=2.5u
lng=0.4u
M61
Wd=2.5u
lng=0.4u
4 INVERTERS
M54
Wd=2.5u
lng=0.4u
M10
Wd=2.5u
lng=0.4u
M53
Wd=5u
lng=1u
M52
Wd=5u
lng=1u
OP AMP
PM
IN

FIG.123H

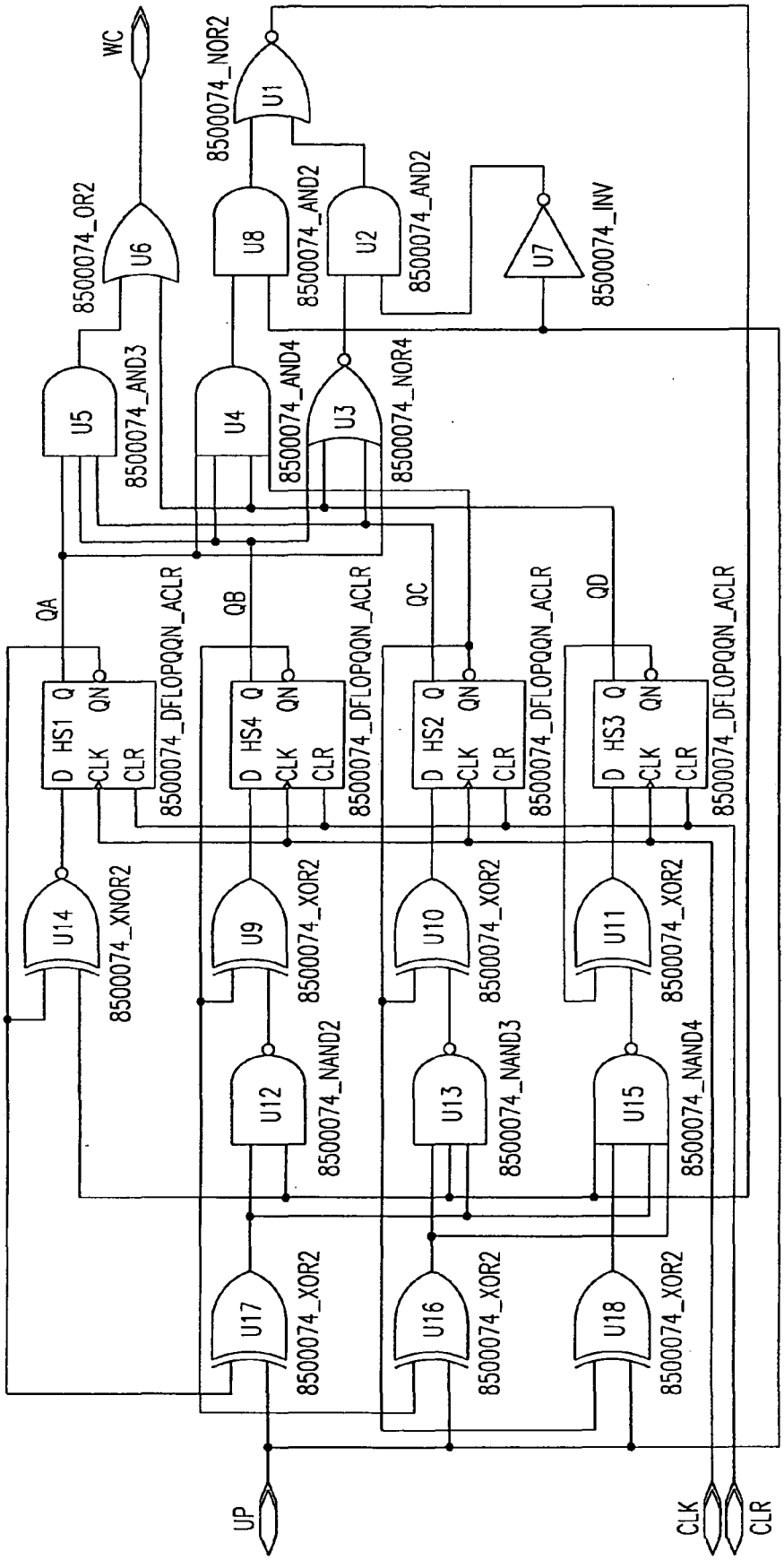
WC
8500074_OR2
U6
8500074_NOR2
U1
8500074_AND2
U8
8500074_AND2
U2
8500074_INV
U7
8500074_AND3
U5
8500074_AND4
U4
8500074_NOR4
U3
QA
QB
QC
QD
8500074_DFLOPQQN_ACLR
D HS1 Q
CLK QN
CLR
D HS4 Q
CLK QN
CLR
D HS2 Q
CLK QN
CLR
D HS3 Q
CLK QN
CLR
U14
8500074_XNOR2
U9
8500074_XOR2
U10
8500074_XOR2
U11
8500074_XOR2
U12
8500074_NAND2
U13
8500074_NAND3
U15
8500074_NAND4
U17
8500074_XOR2
U16
8500074_XOR2
U18
8500074_XOR2
UP
CLK
CLR

FIG. 124

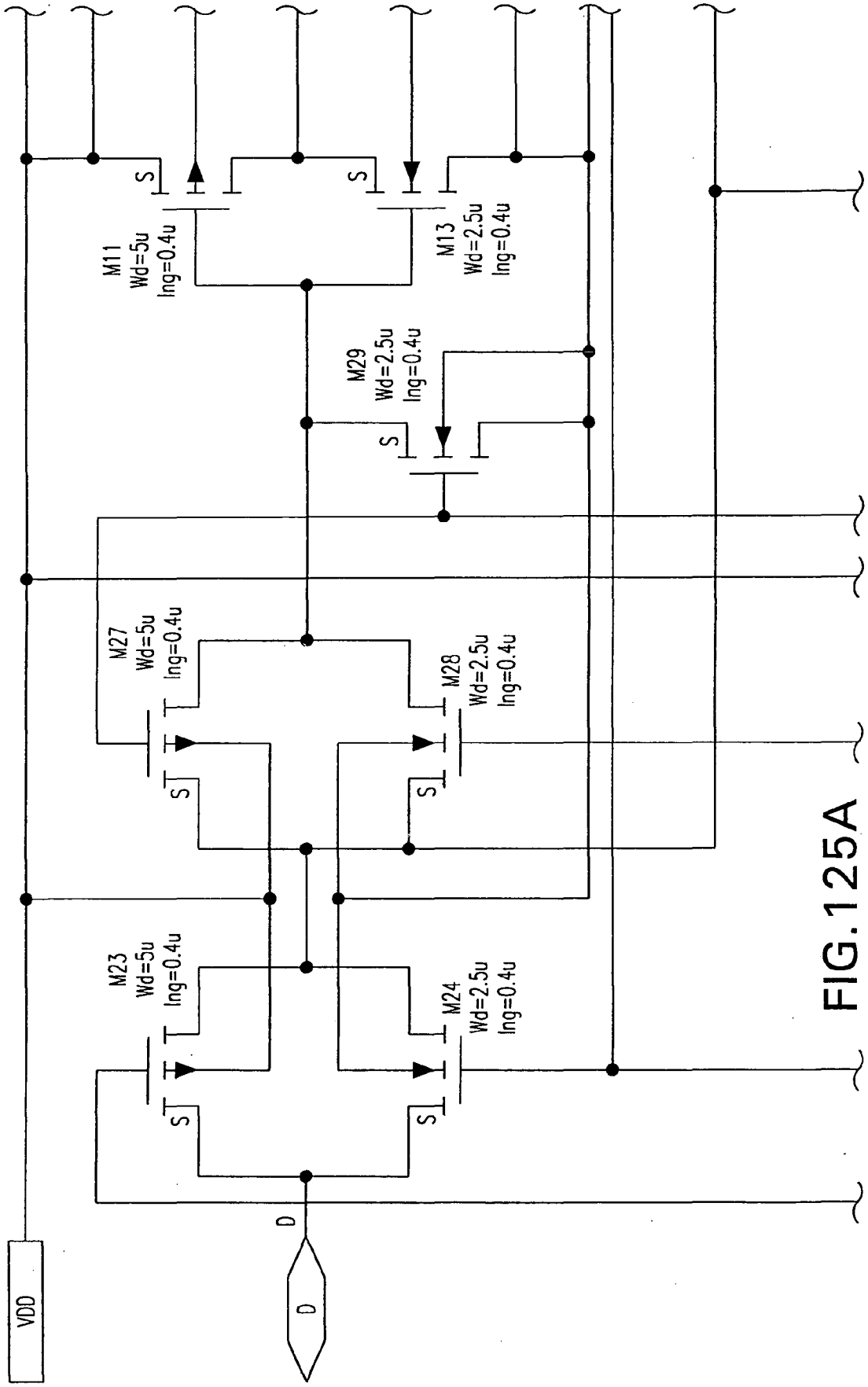
VDD
D
D
M23
Wd=5u
lng=0.4u
M24
Wd=2.5u
lng=0.4u
M27
Wd=5u
lng=0.4u
M28
Wd=2.5u
lng=0.4u
M29
Wd=2.5u
lng=0.4u
M11
Wd=5u
lng=0.4u
M13
Wd=2.5u
lng=0.4u
S

FIG.125A

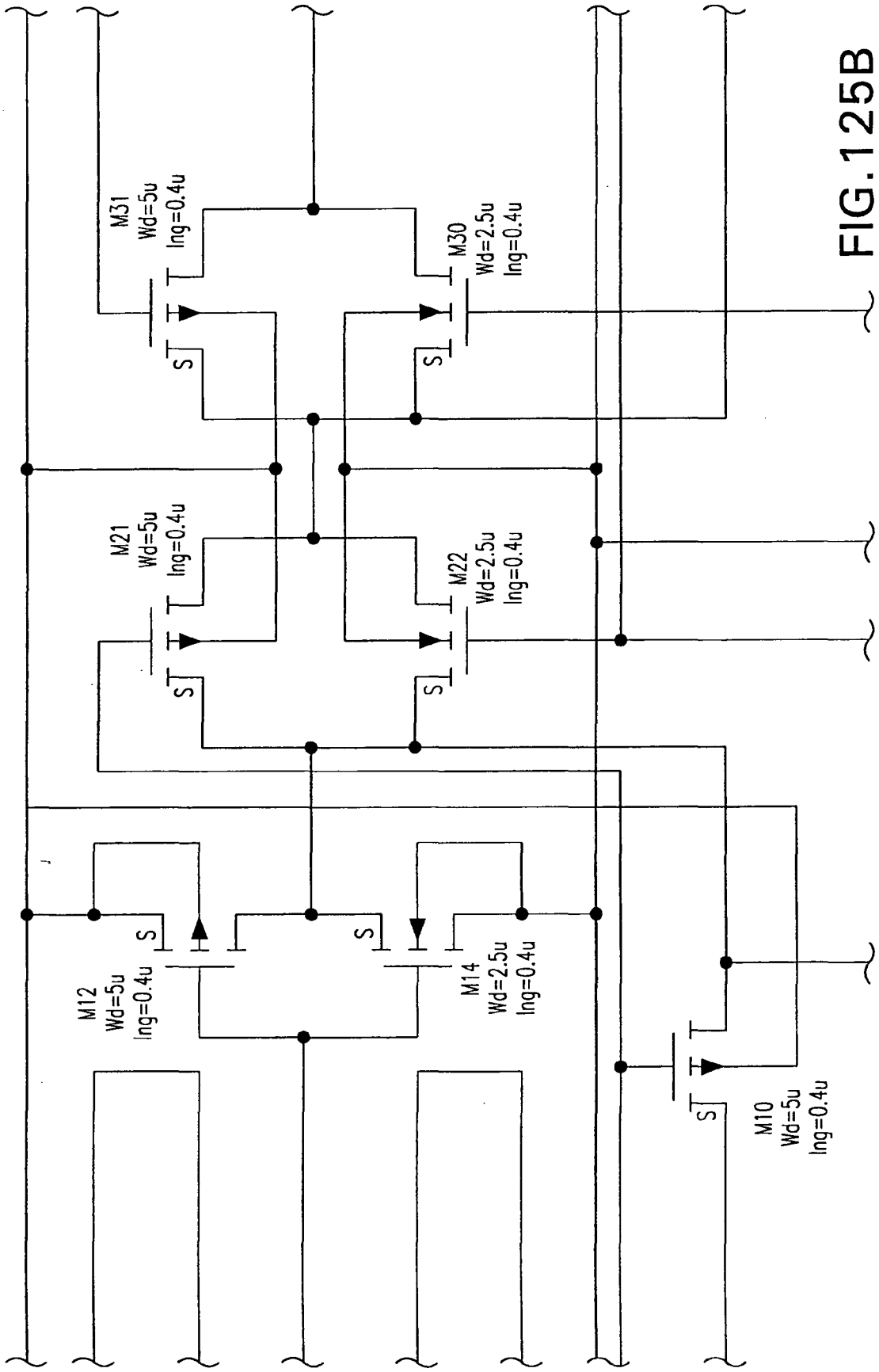
M31
Wd=5u
lng=0.4u
M30
Wd=2.5u
lng=0.4u
M21
Wd=5u
lng=0.4u
M22
Wd=2.5u
lng=0.4u
M12
Wd=5u
lng=0.4u
M14
Wd=2.5u
lng=0.4u
M10
Wd=5u
lng=0.4u
S

FIG. 125B

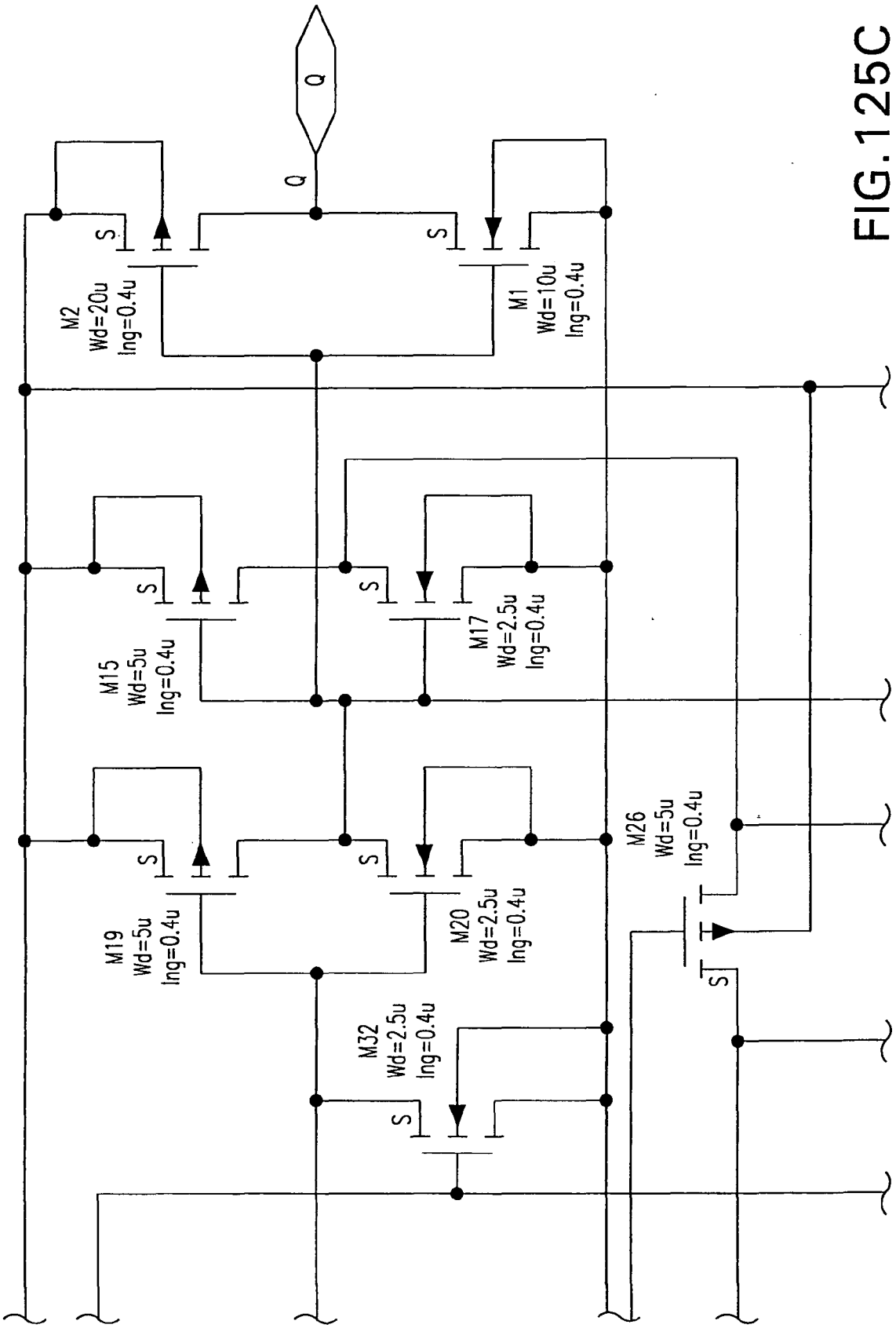
Q
Q
S
M2
Wd=20u
lng=0.4u
S
M1
Wd=10u
lng=0.4u
S
M15
Wd=5u
lng=0.4u
S
M17
Wd=2.5u
lng=0.4u
S
M19
Wd=5u
lng=0.4u
S
M20
Wd=2.5u
lng=0.4u
M26
Wd=5u
lng=0.4u
S
M32
Wd=2.5u
lng=0.4u
S

FIG. 125C

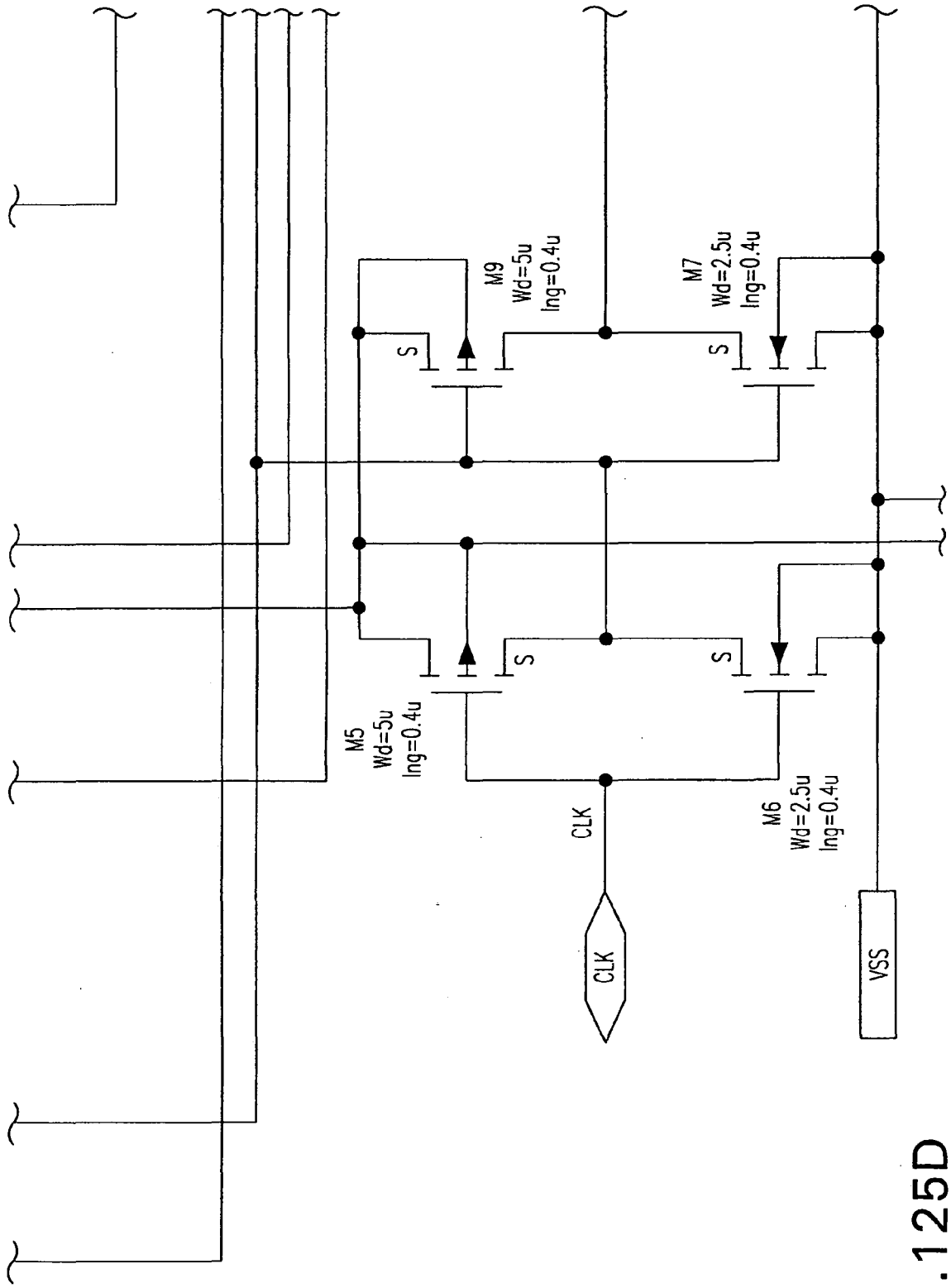
M9
Wd=5u
lng=0.4u
M7
Wd=2.5u
lng=0.4u
S
S
S
S
M5
Wd=5u
lng=0.4u
M6
Wd=2.5u
lng=0.4u
CLK
CLK
VSS

FIG.125D

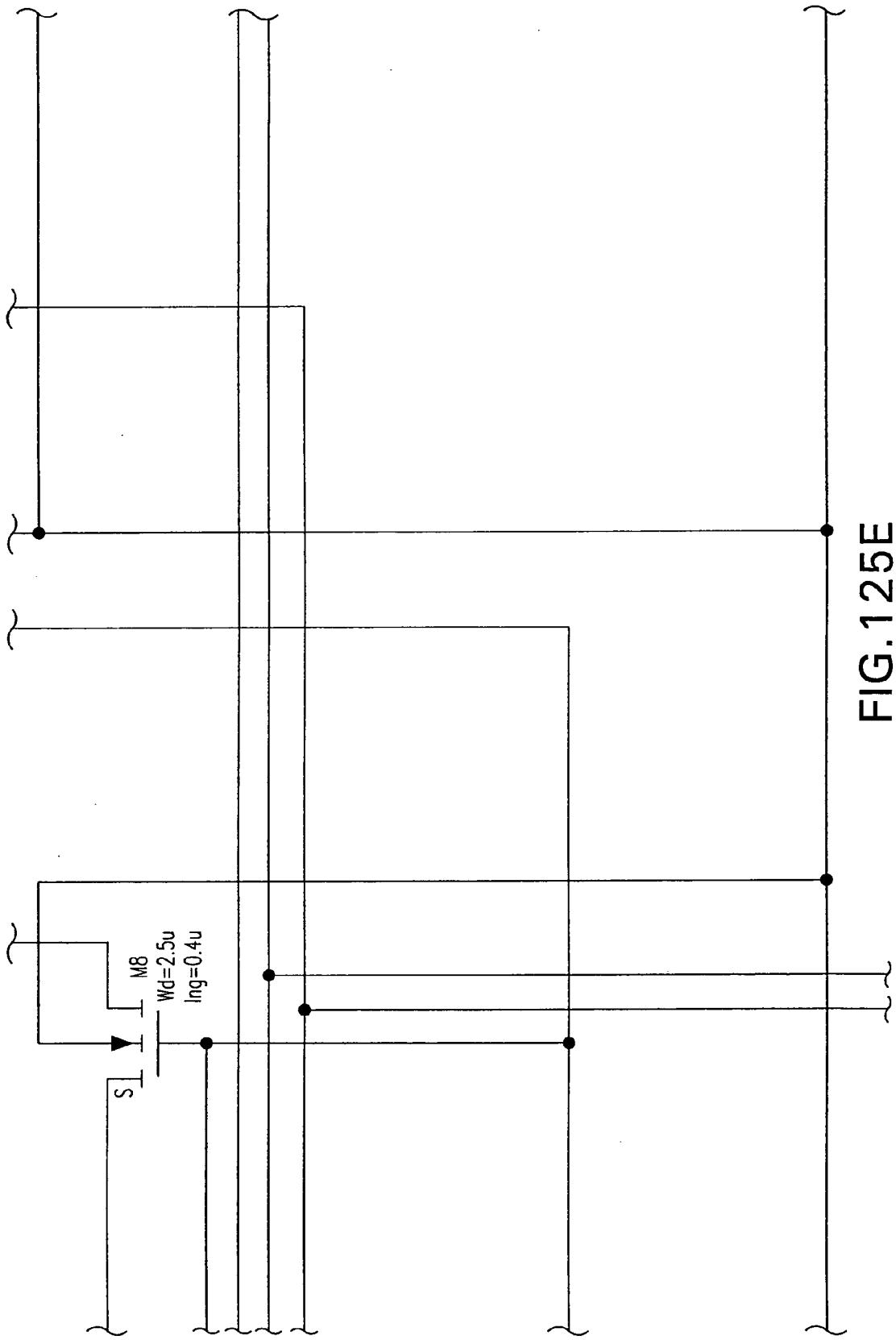

FIG. 125E

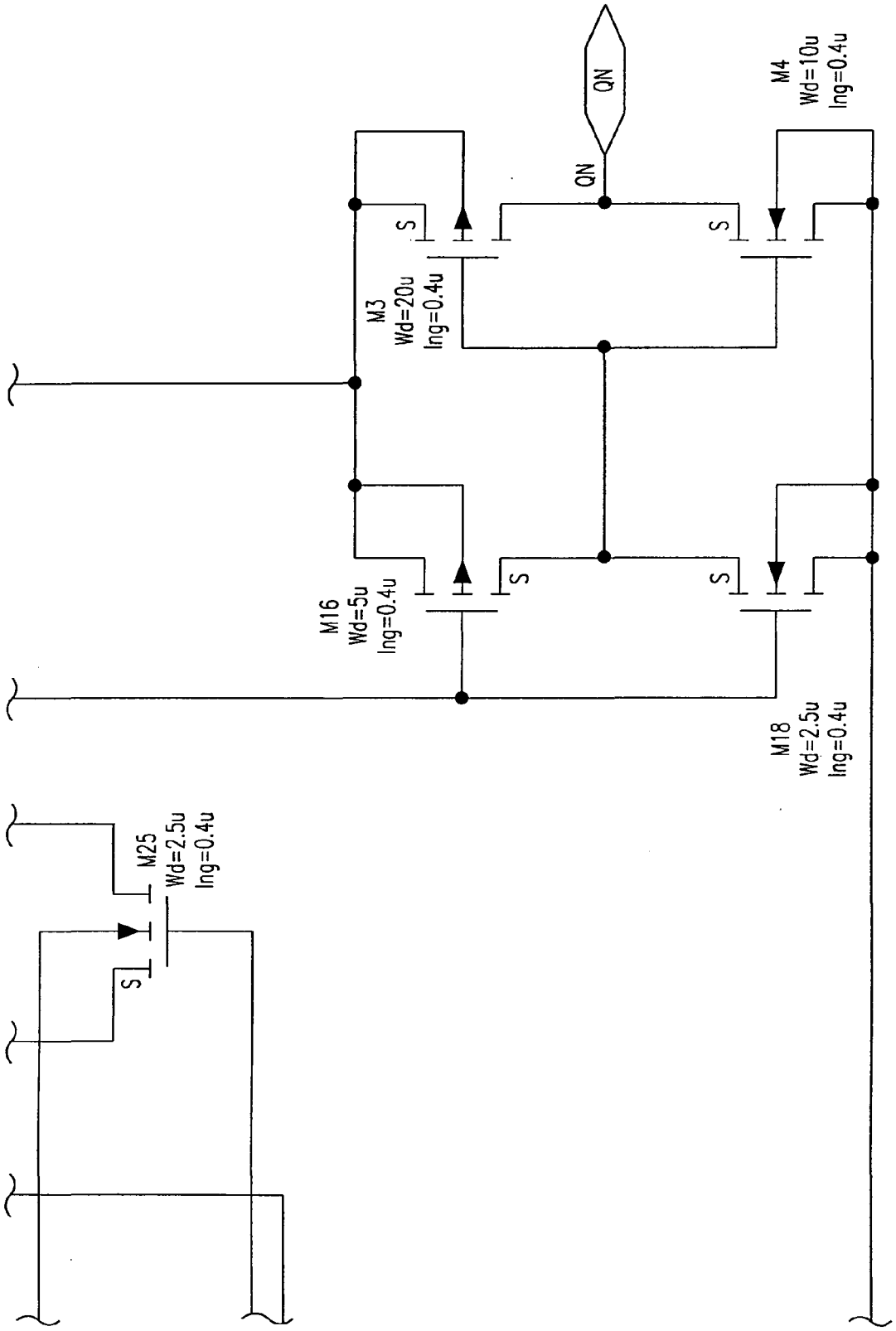
QN
QN
M4
Wd=10u
lng=0.4u
M3
Wd=20u
lng=0.4u
M16
Wd=5u
lng=0.4u
M18
Wd=2.5u
lng=0.4u
M25
Wd=2.5u
lng=0.4u
S

FIG. 125F

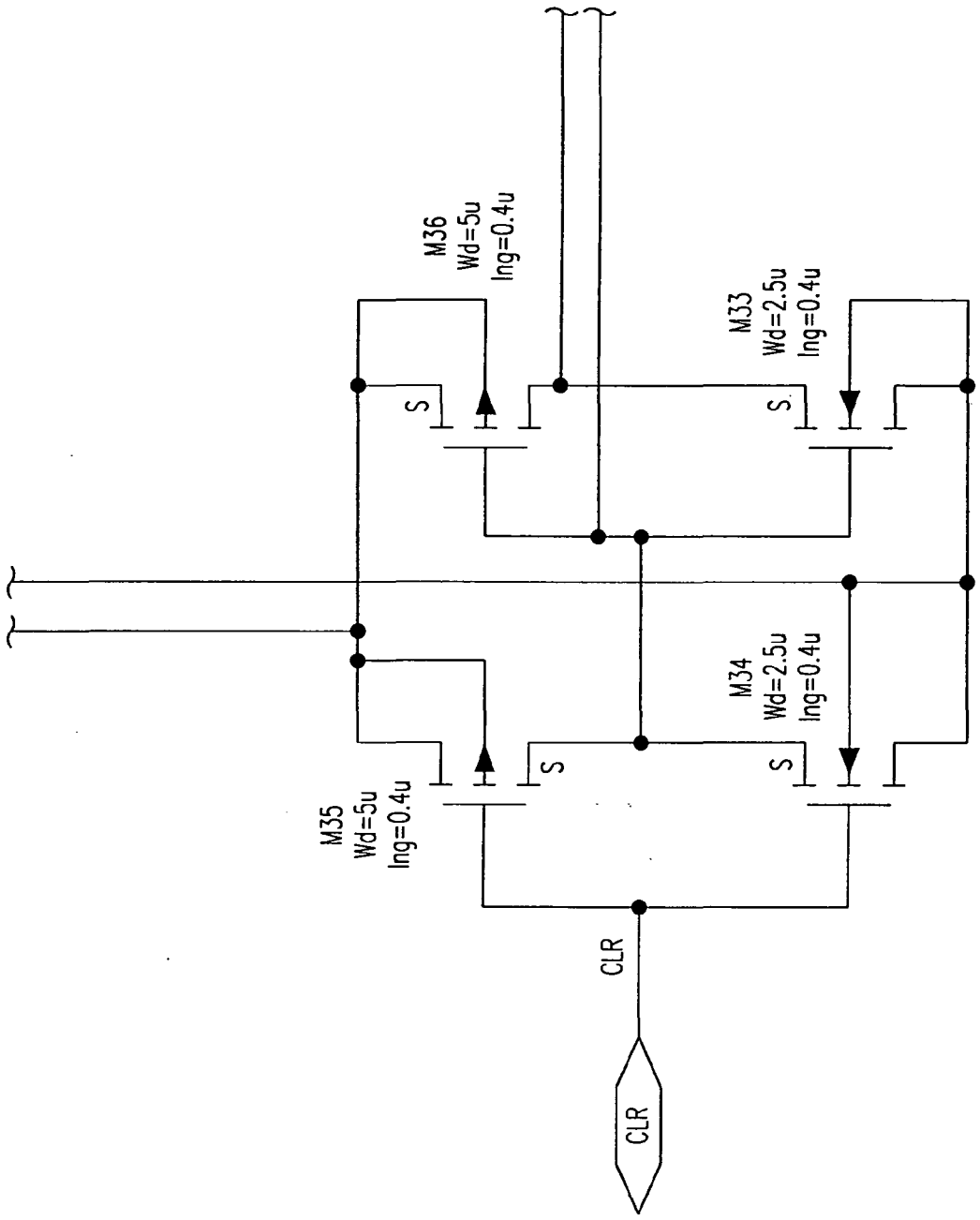
M36
Wd=5u
lng=0.4u
M33
Wd=2.5u
lng=0.4u
S
S
M34
Wd=2.5u
lng=0.4u
M35
Wd=5u
lng=0.4u
S
S
CLR
CLR

FIG.125G

FIG. 125H

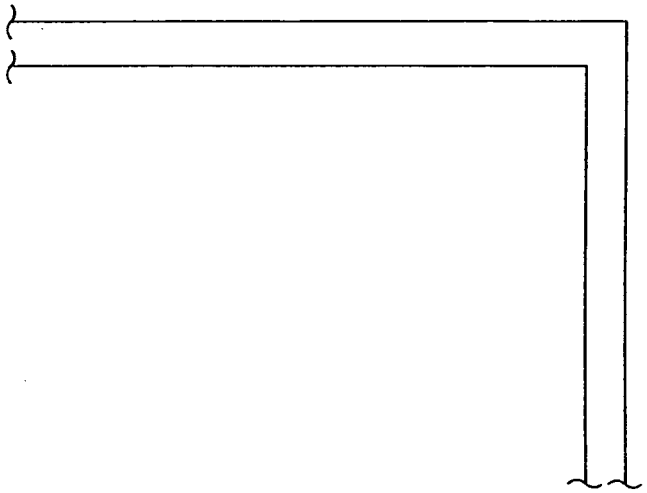

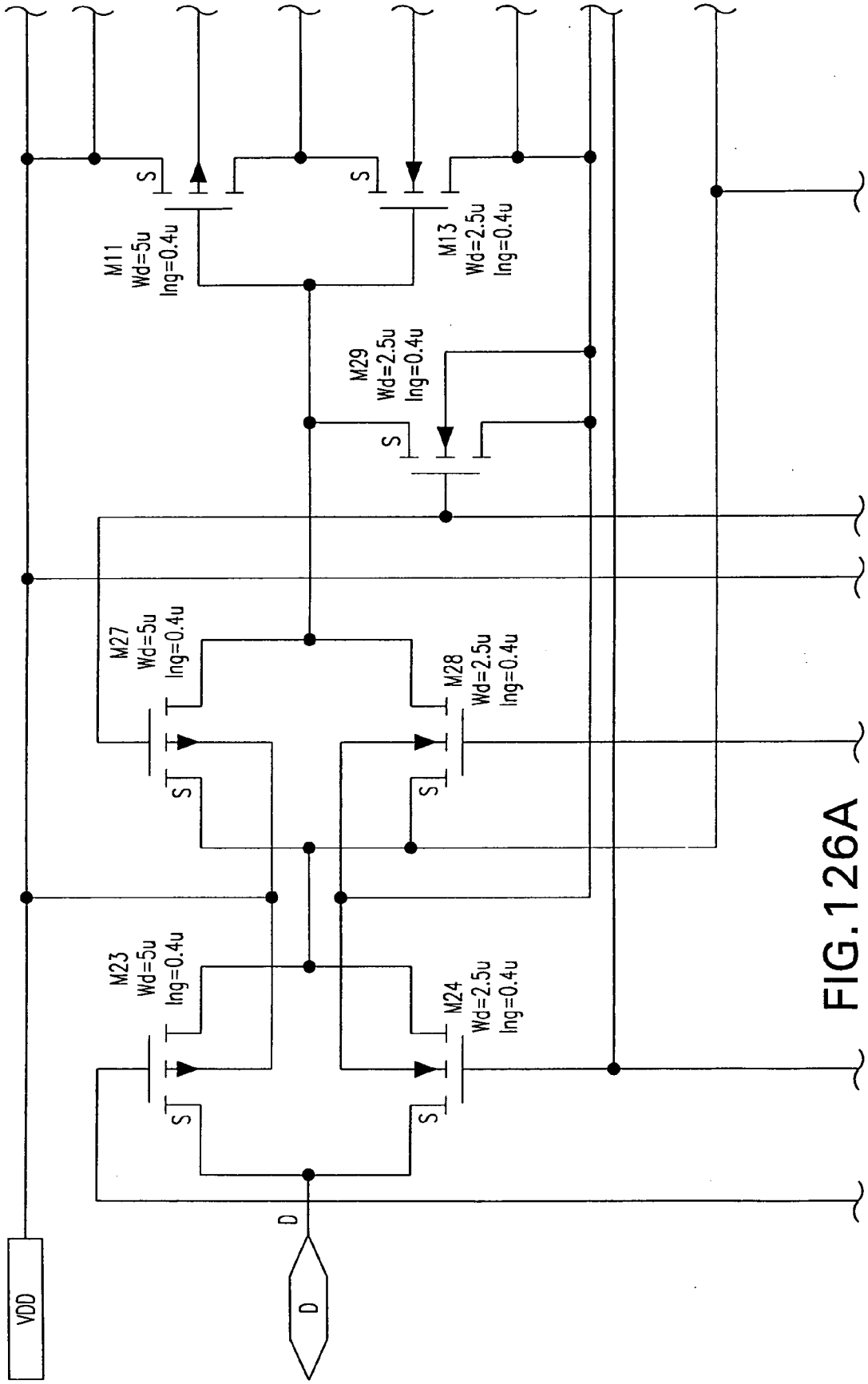
VDD
D
D
M23
Wd=5u
lng=0.4u
M24
Wd=2.5u
lng=0.4u
M27
Wd=5u
lng=0.4u
M28
Wd=2.5u
lng=0.4u
M29
Wd=2.5u
lng=0.4u
M11
Wd=5u
lng=0.4u
M13
Wd=2.5u
lng=0.4u
S

FIG.126A

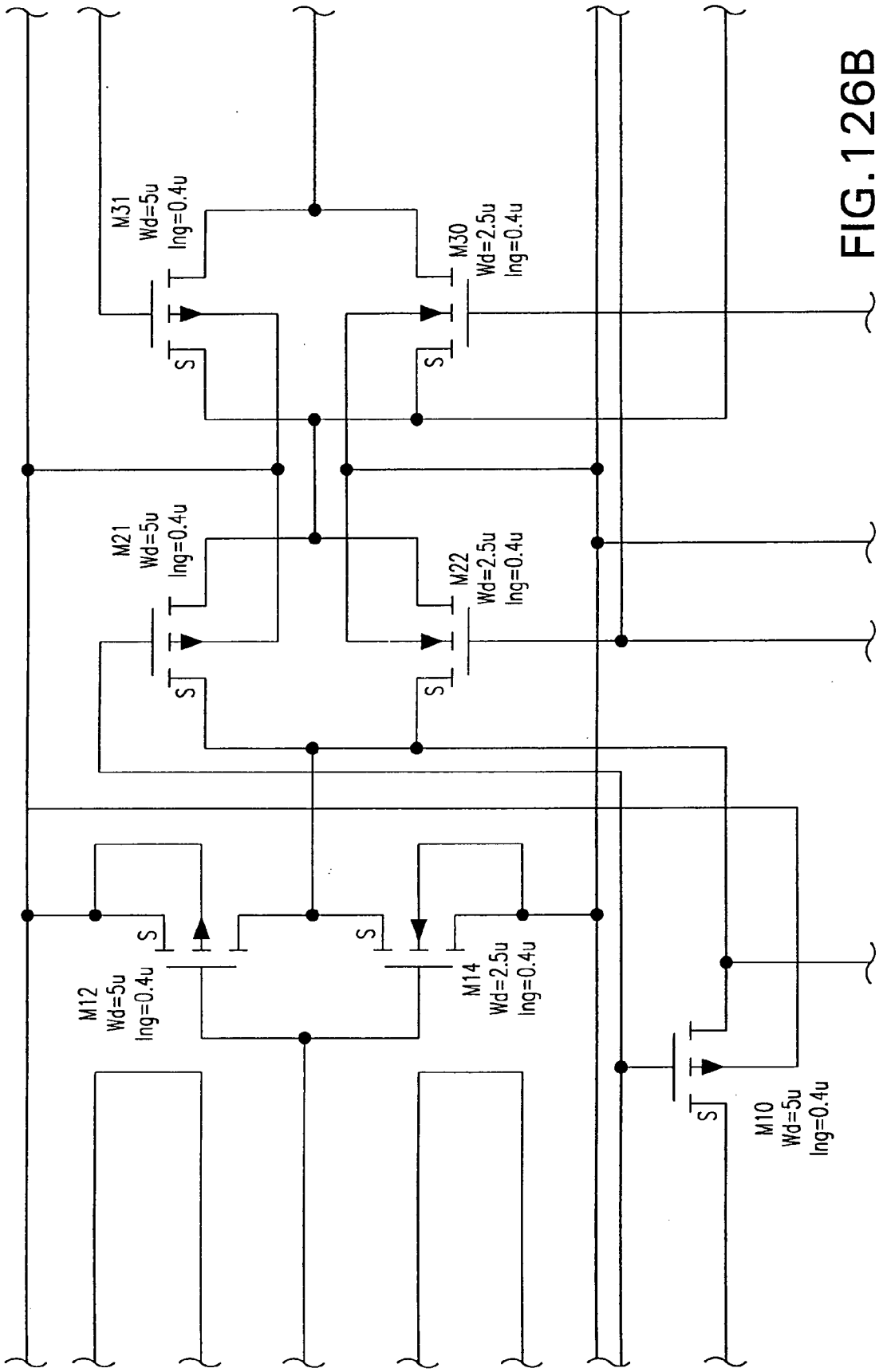
M31
Wd=5u
lng=0.4u
M30
Wd=2.5u
lng=0.4u
M21
Wd=5u
lng=0.4u
M22
Wd=2.5u
lng=0.4u
M12
Wd=5u
lng=0.4u
M14
Wd=2.5u
lng=0.4u
M10
Wd=5u
lng=0.4u
S

FIG.126B

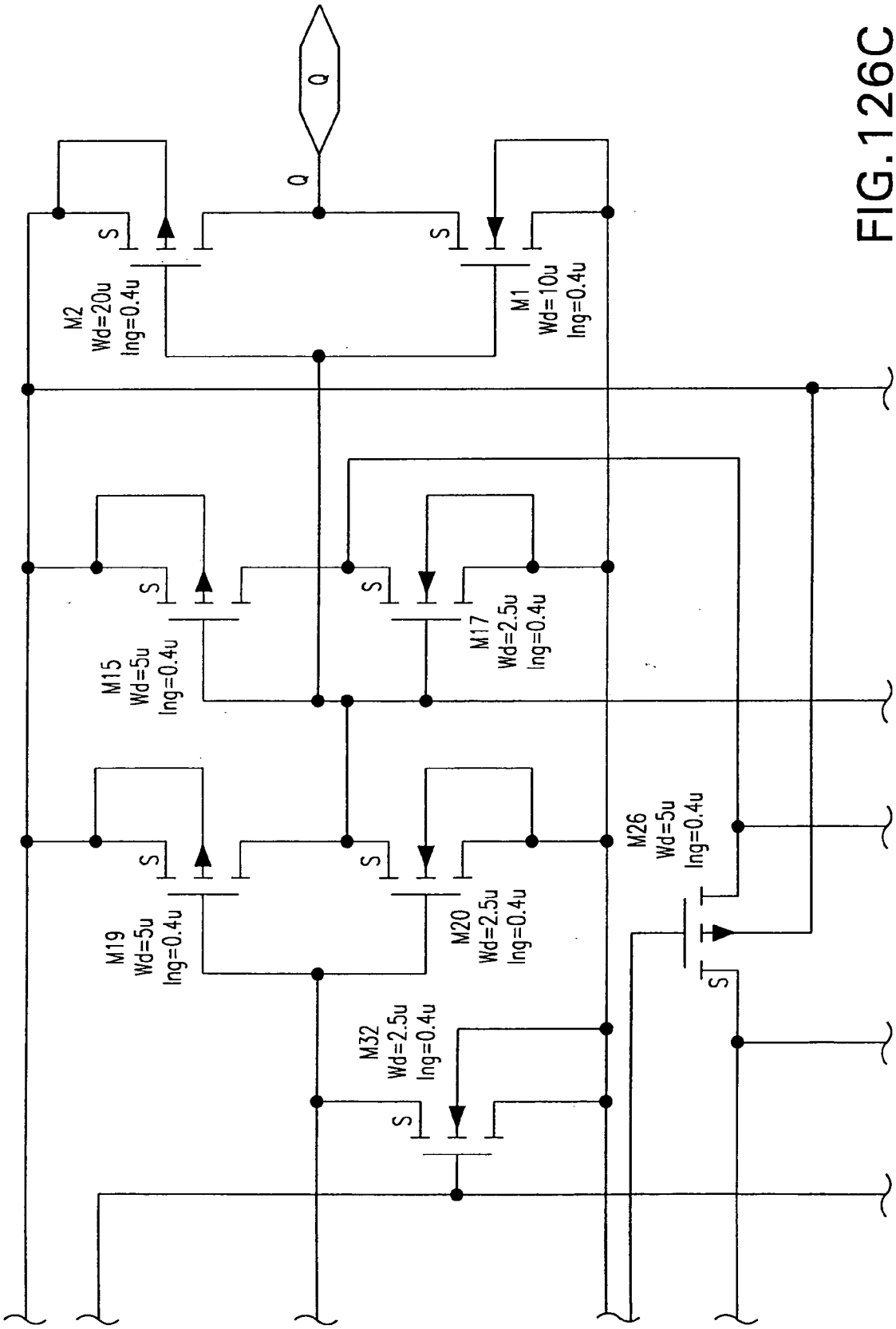
Q
Q
M2
Wd=20u
lng=0.4u
M1
Wd=10u
lng=0.4u
M15
Wd=5u
lng=0.4u
M17
Wd=2.5u
lng=0.4u
M19
Wd=5u
lng=0.4u
M20
Wd=2.5u
lng=0.4u
M26
Wd=5u
lng=0.4u
M32
Wd=2.5u
lng=0.4u
S

FIG.126C

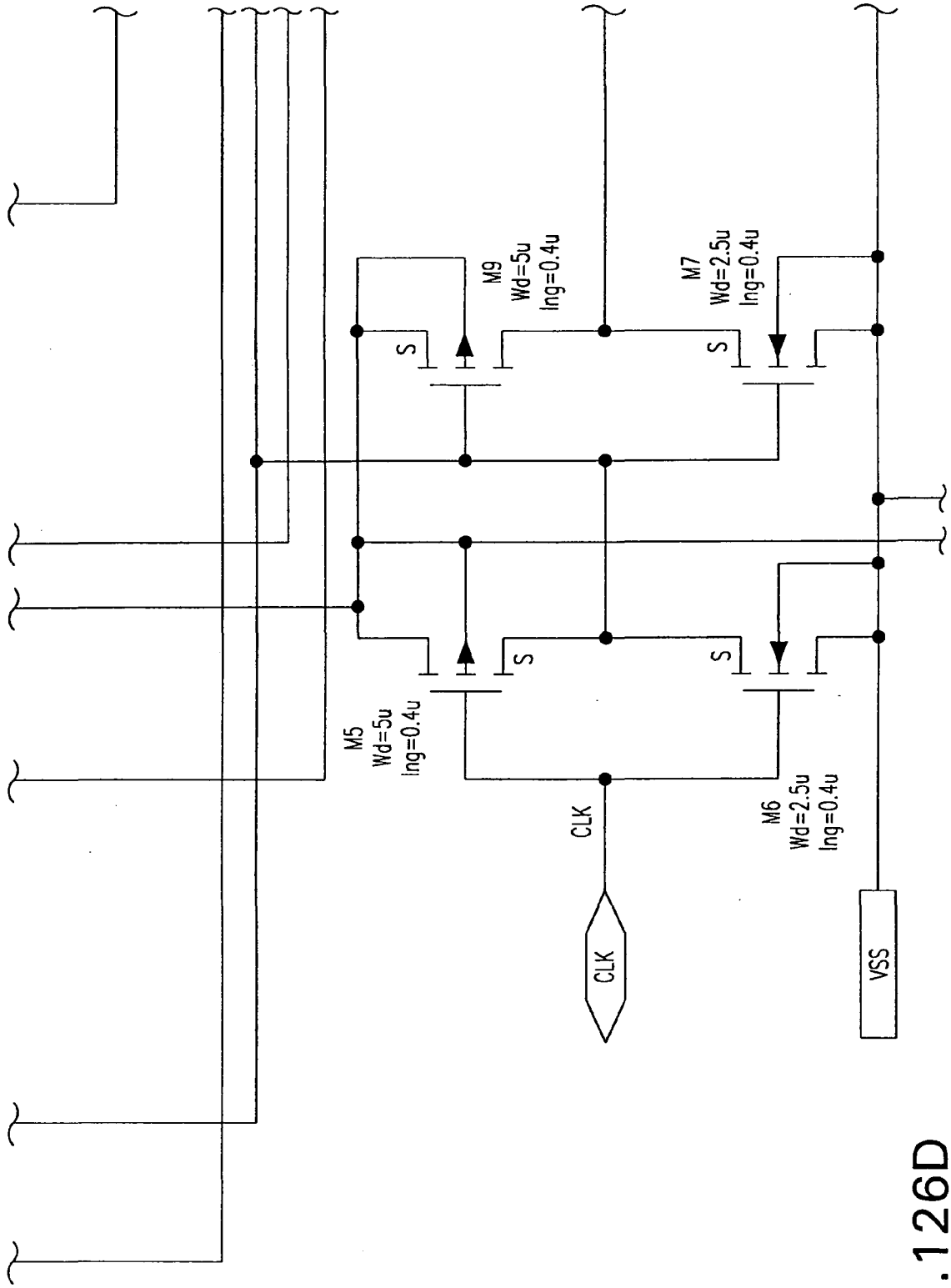
M9
Wd=5u
lng=0.4u
M7
Wd=2.5u
lng=0.4u
S
S
S
S
M5
Wd=5u
lng=0.4u
M6
Wd=2.5u
lng=0.4u
CLK
CLK
VSS

FIG.126D

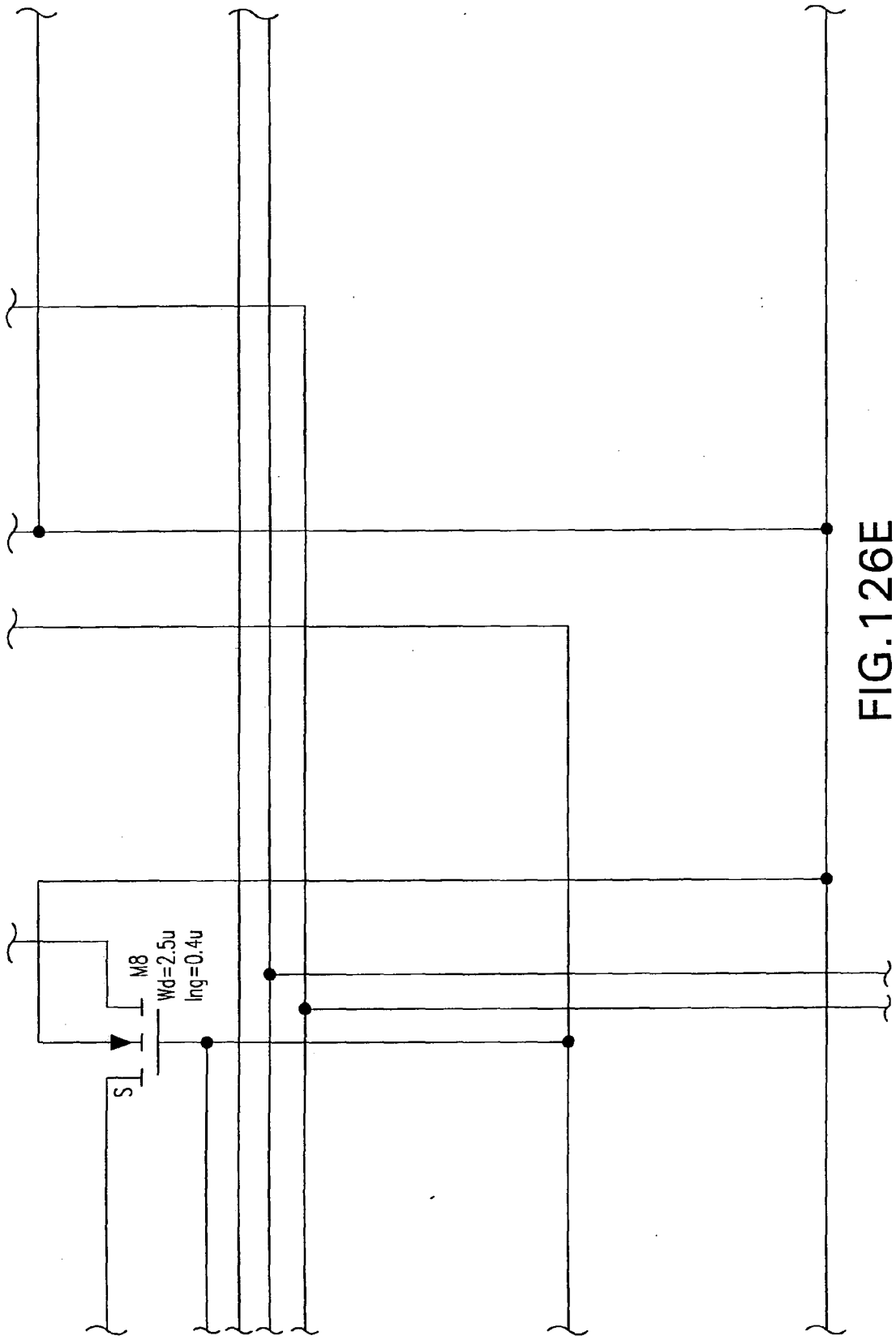

FIG.126E

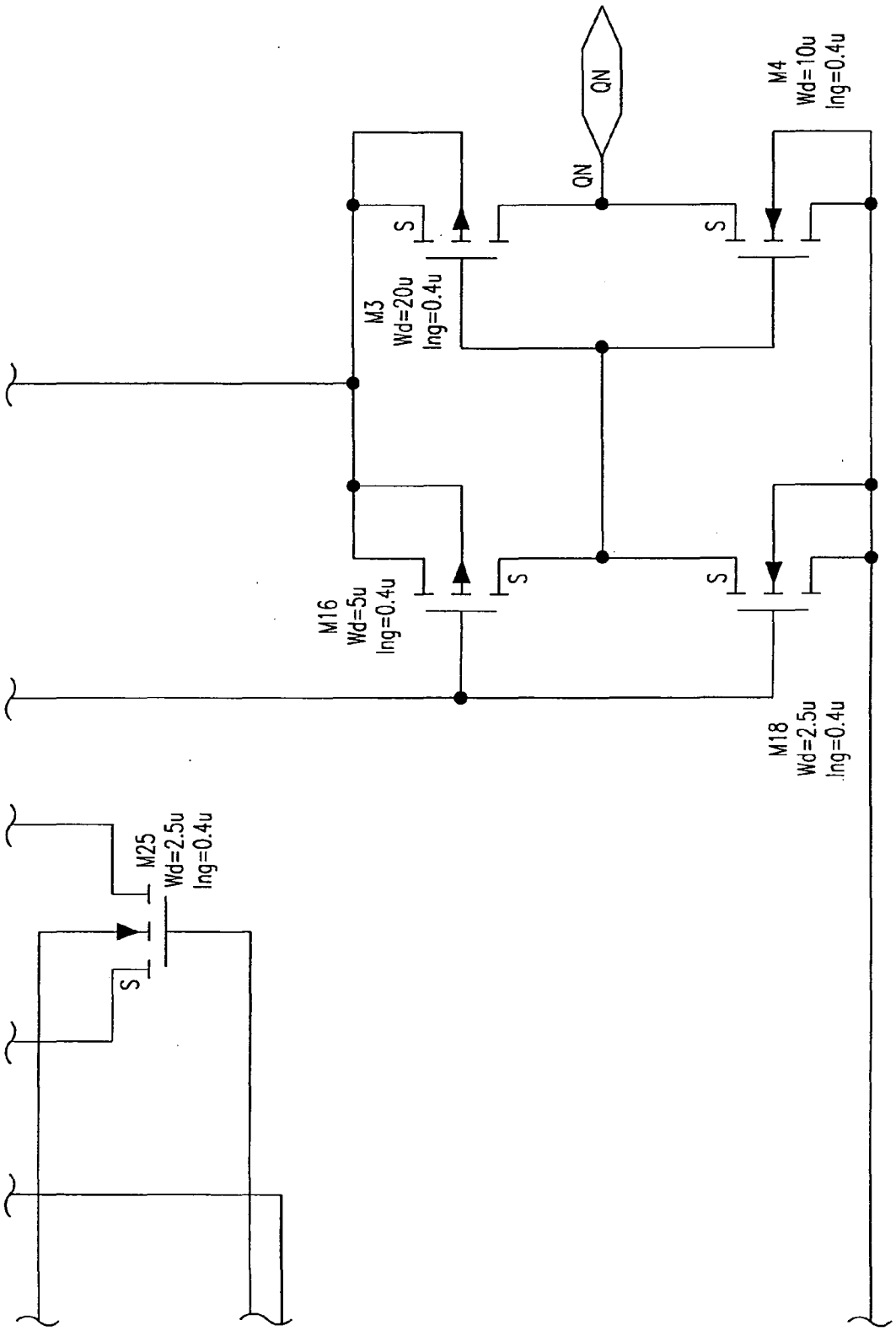
QN
QN
M4
Wd=10u
lng=0.4u
M3
Wd=20u
lng=0.4u
M16
Wd=5u
lng=0.4u
M18
Wd=2.5u
lng=0.4u
M25
Wd=2.5u
lng=0.4u
S

FIG.126F

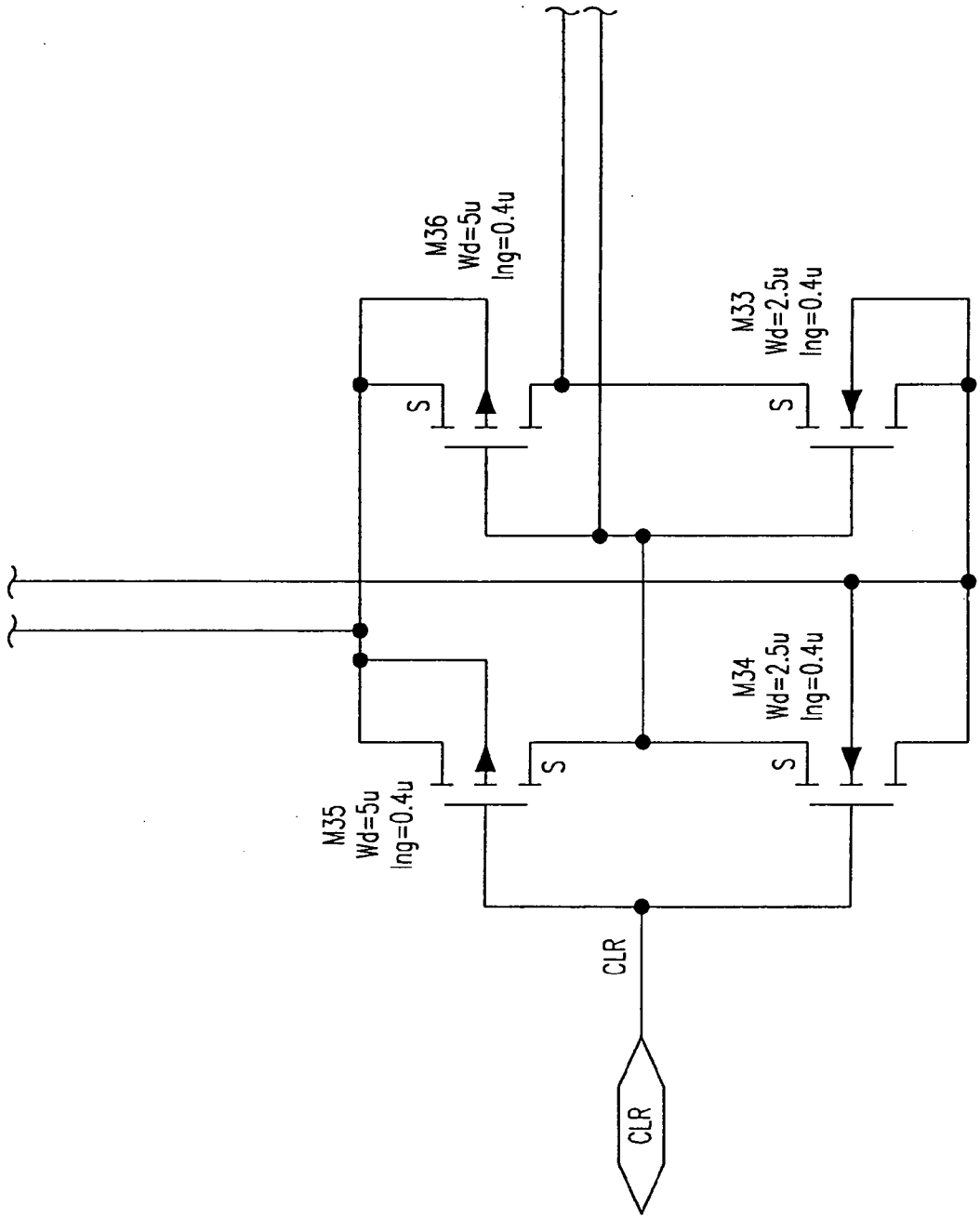
M36
Wd=5u
lng=0.4u
M33
Wd=2.5u
lng=0.4u
S
S
M34
Wd=2.5u
lng=0.4u
M35
Wd=5u
lng=0.4u
S
S
CLR
CLR

FIG.126G

FIG. 126H

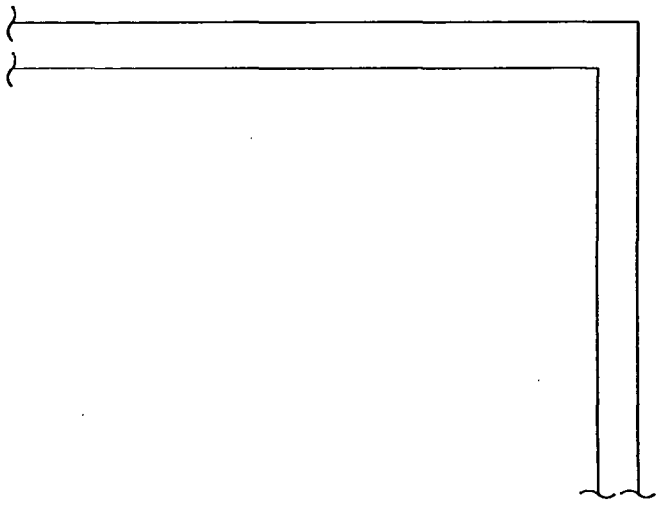

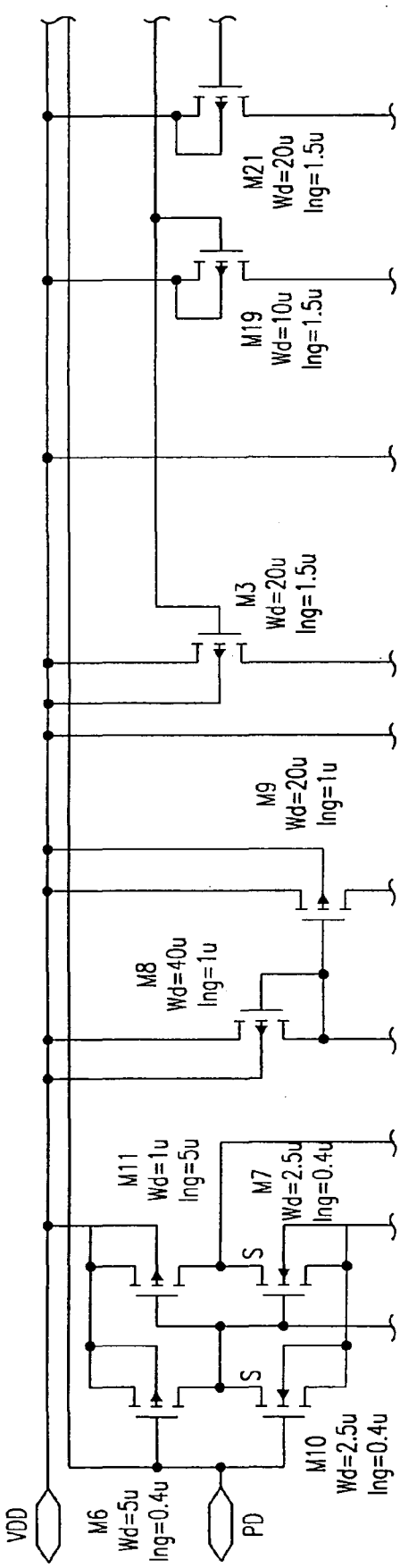
VDD
M6
Wd=5u
lng=0.4u
PD
M10
Wd=2.5u
lng=0.4u
S
S
M11
Wd=1u
lng=5u
M7
Wd=2.5u
lng=0.4u
M8
Wd=40u
lng=1u
M9
Wd=20u
lng=1u
M3
Wd=20u
lng=1.5u
M19
Wd=10u
lng=1.5u
M21
Wd=20u
lng=1.5u

FIG.127A

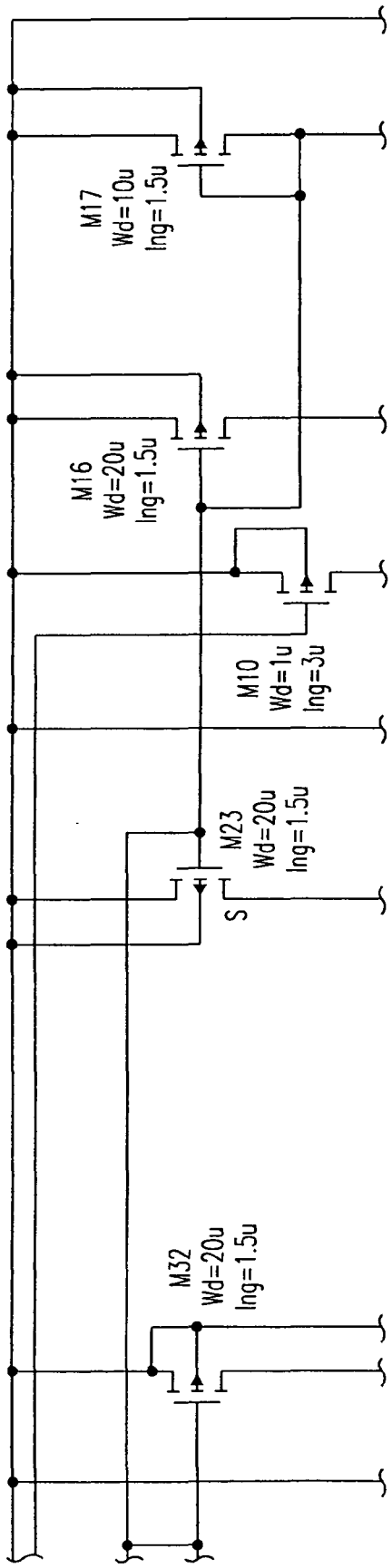
M17
Wd=10u
lng=1.5u
M16
Wd=20u
lng=1.5u
M10
Wd=1u
lng=3u
M23
Wd=20u
lng=1.5u
S
M32
Wd=20u
lng=1.5u

FIG.127B

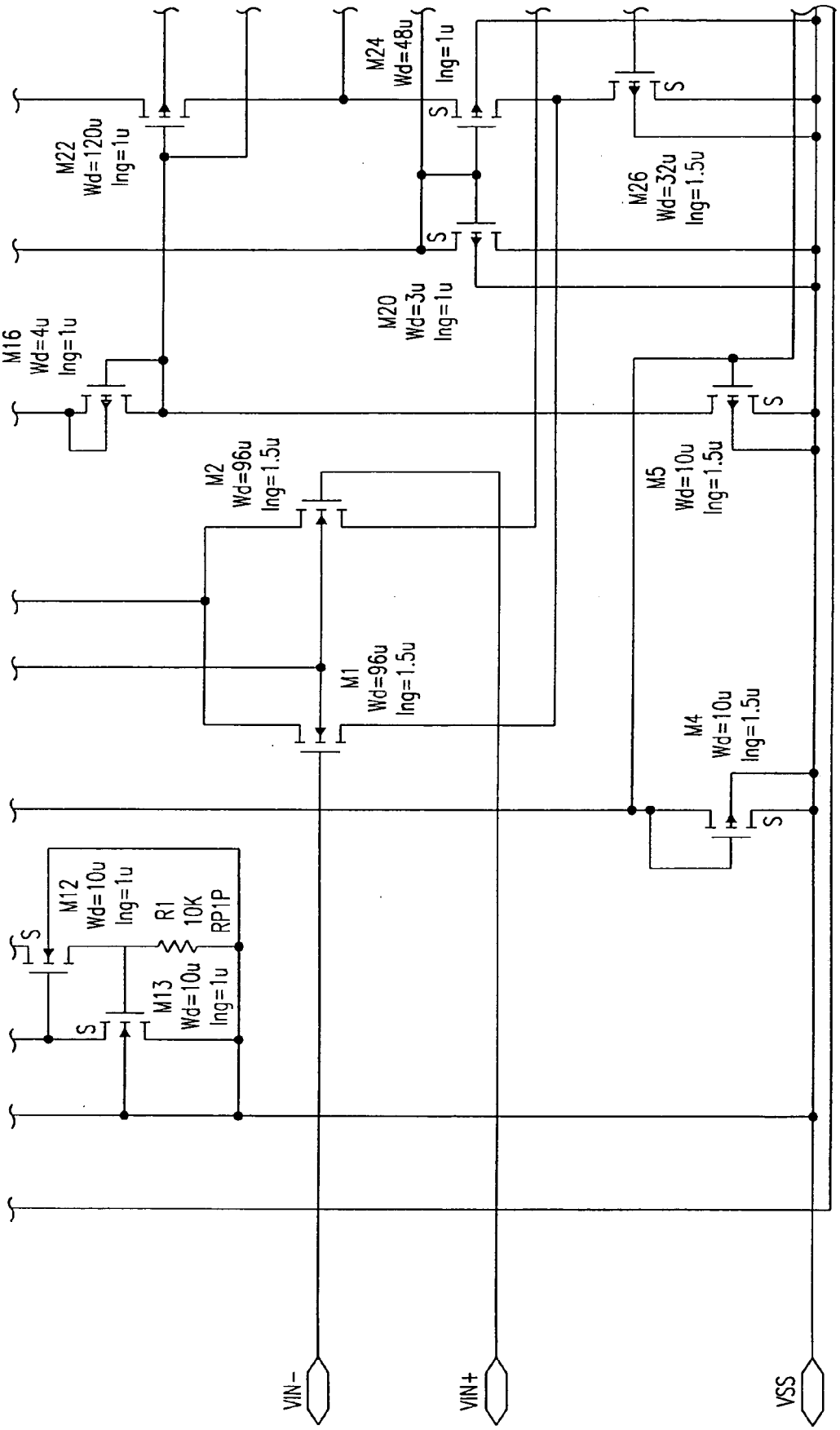
M22
Wd=120u
lng=1u
M24
Wd=48u
lng=1u
M26
Wd=32u
lng=1.5u
M20
Wd=3u
lng=1u
M16
Wd=4u
lng=1u
M2
Wd=96u
lng=1.5u
M5
Wd=10u
lng=1.5u
M1
Wd=96u
lng=1.5u
M4
Wd=10u
lng=1.5u
M12
Wd=10u
lng=1u
R1
10K
RP1P
M13
Wd=10u
lng=1u
S
VIN-
VIN+
VSS

FIG.127C

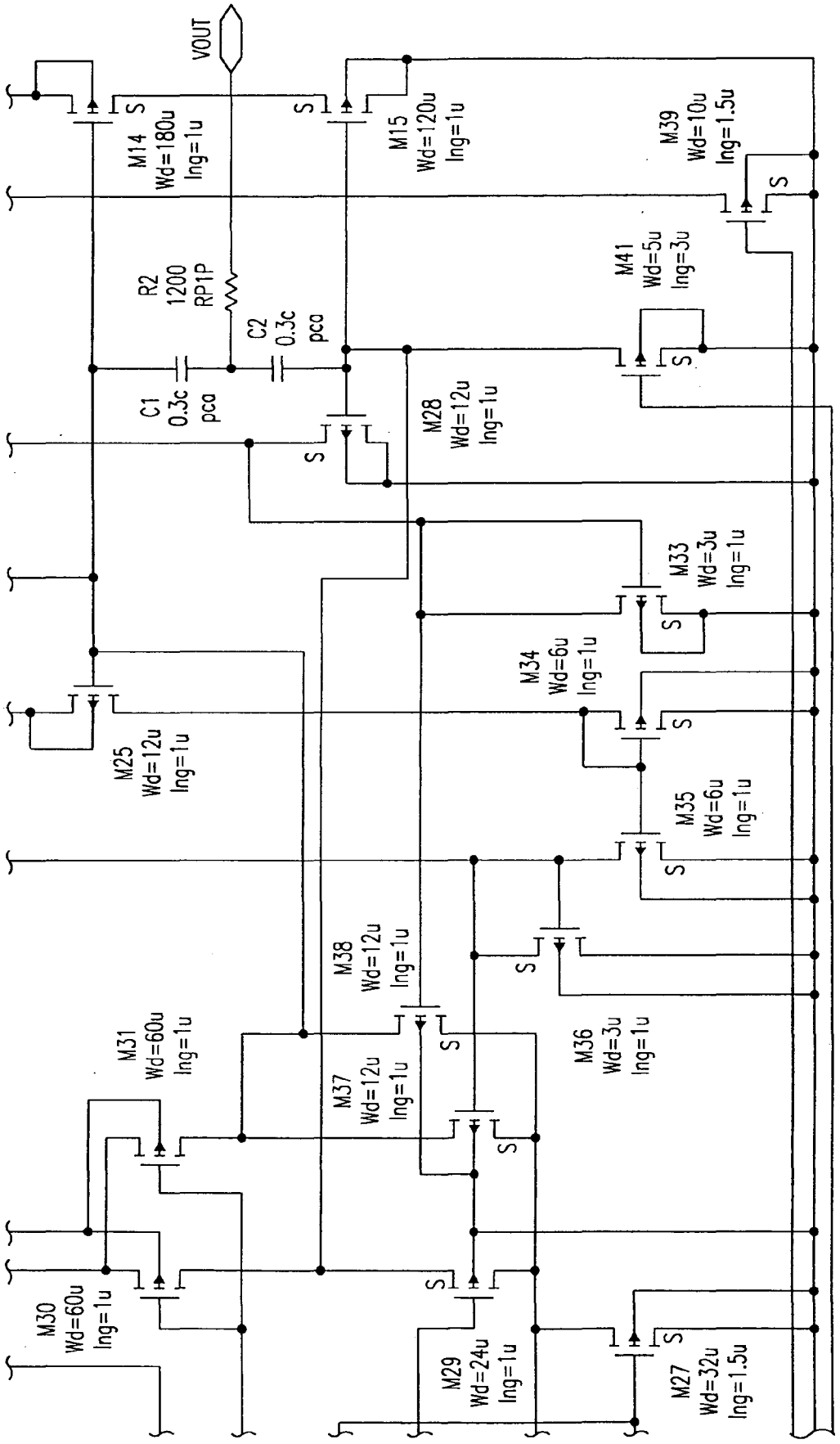
VOUT
M14
Wd=180u
lng=1u
M15
Wd=120u
lng=1u
M39
Wd=10u
lng=1.5u
R2
1200
RP1P
C2
0.3c
pca
C1
0.3c
pca
M41
Wd=5u
lng=3u
M28
Wd=12u
lng=1u
M33
Wd=3u
lng=1u
M34
Wd=6u
lng=1u
M25
Wd=12u
lng=1u
M35
Wd=6u
lng=1u
M38
Wd=12u
lng=1u
M36
Wd=3u
lng=1u
M31
Wd=60u
lng=1u
M37
Wd=12u
lng=1u
M30
Wd=60u
lng=1u
M29
Wd=24u
lng=1u
M27
Wd=32u
lng=1.5u
S

FIG. 127D

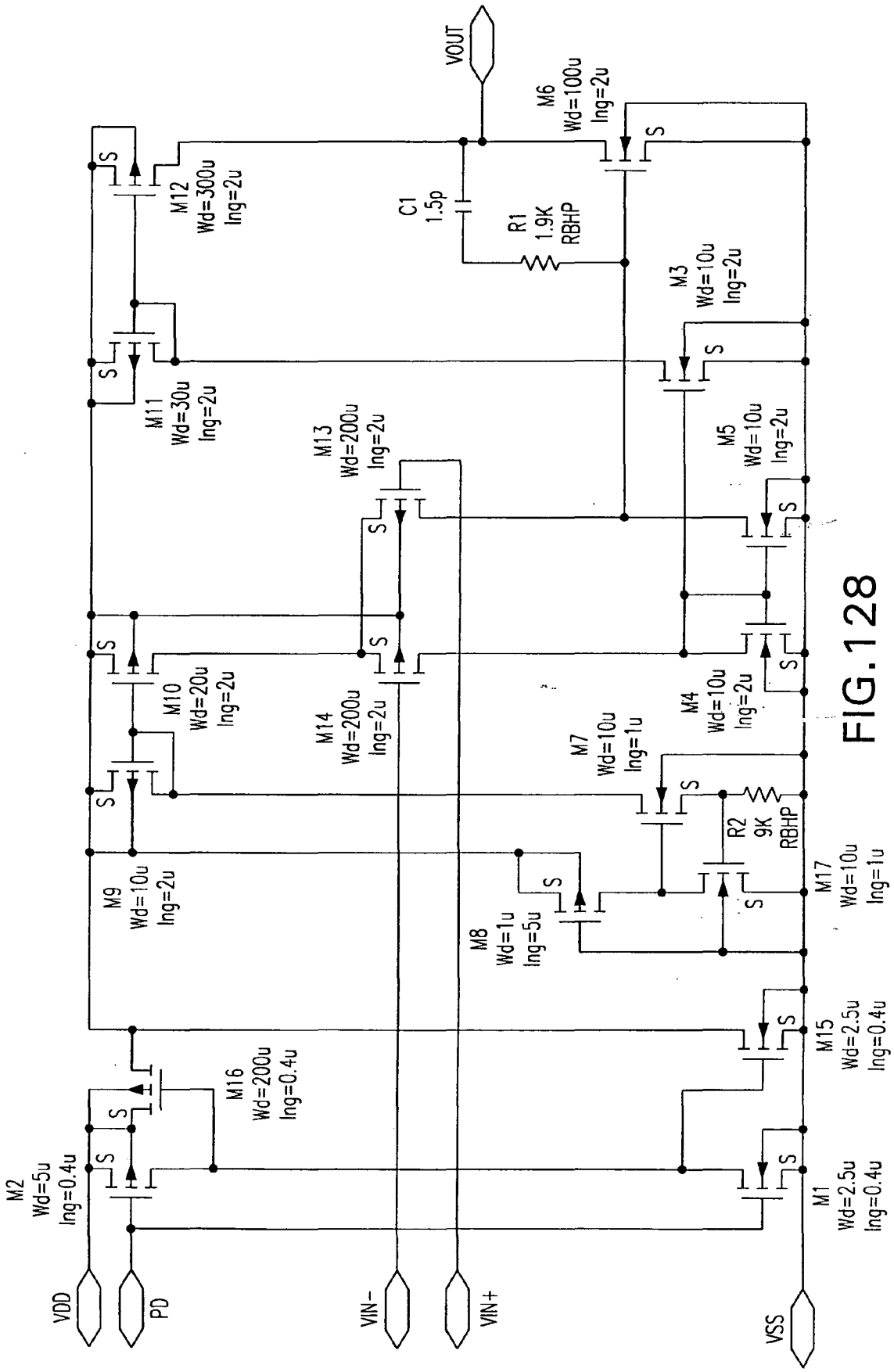
VOUT
M6
Wd=100u
lng=2u
M12
Wd=300u
lng=2u
C1
1.5p
R1
1.9K
RBHP
M3
Wd=10u
lng=2u
M11
Wd=30u
lng=2u
M13
Wd=200u
lng=2u
M5
Wd=10u
lng=2u
M10
Wd=20u
lng=2u
M14
Wd=200u
lng=2u
M4
Wd=10u
lng=2u
M7
Wd=10u
lng=1u
R2
9K
RBHP
M9
Wd=10u
lng=2u
M8
Wd=1u
lng=5u
M17
Wd=10u
lng=1u
M15
Wd=2.5u
lng=0.4u
M16
Wd=200u
lng=0.4u
M2
Wd=5u
lng=0.4u
M1
Wd=2.5u
lng=0.4u
VDD
PD
VIN-
VIN+
VSS
S

FIG. 128

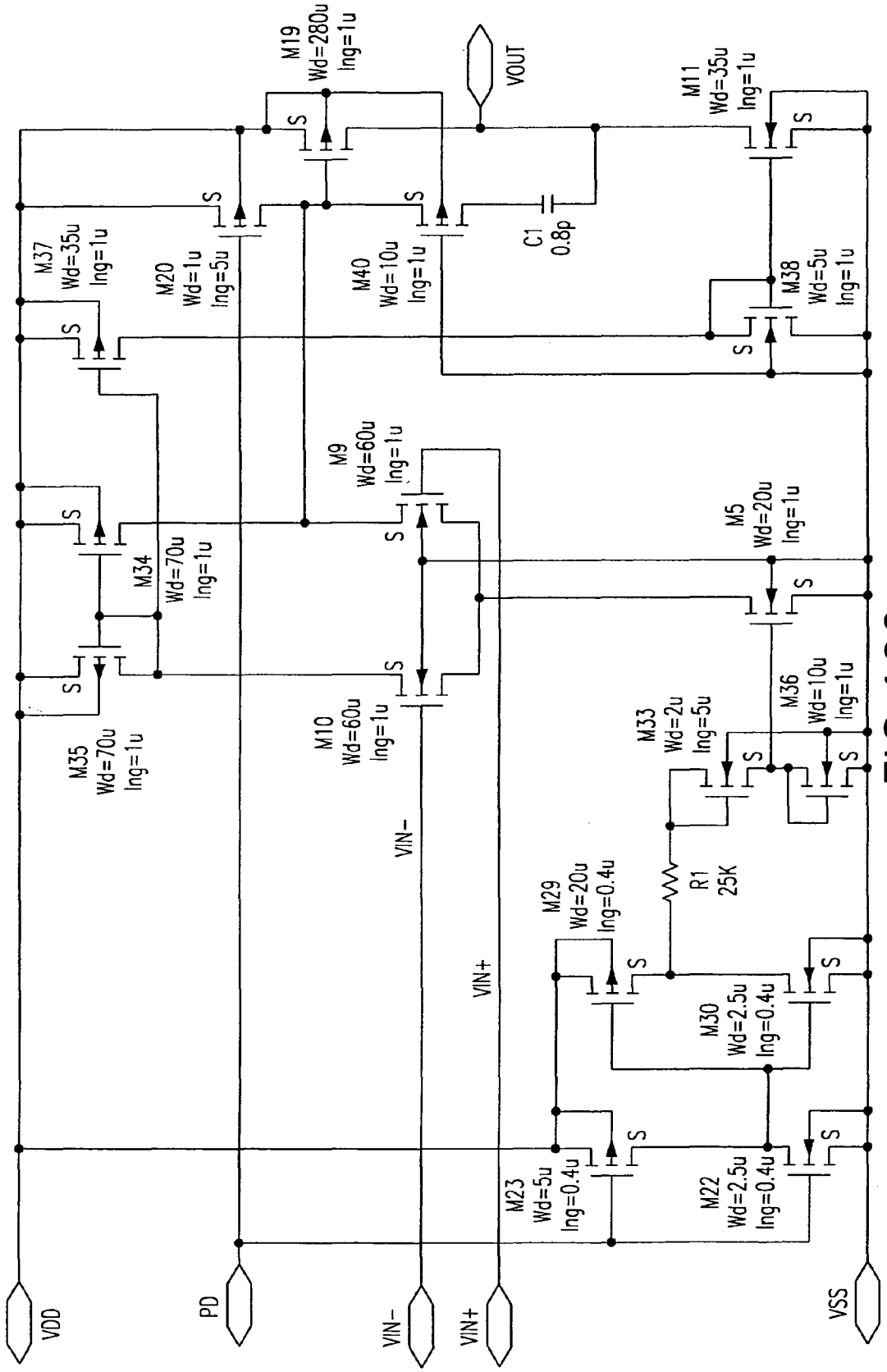
M19
Wd=280u
lng=1u
VOUT
M11
Wd=35u
lng=1u
M37
Wd=35u
lng=1u
M20
Wd=1u
lng=5u
M40
Wd=10u
lng=1u
C1
0.8p
M38
Wd=5u
lng=1u
M9
Wd=60u
lng=1u
M5
Wd=20u
lng=1u
M34
Wd=70u
lng=1u
M35
Wd=70u
lng=1u
M10
Wd=60u
lng=1u
M36
Wd=10u
lng=1u
M33
Wd=2u
lng=5u
VIN-
R1
25K
M29
Wd=20u
lng=0.4u
VIN+
M30
Wd=2.5u
lng=0.4u
M23
Wd=5u
lng=0.4u
M22
Wd=2.5u
lng=0.4u
VDD
PD
VIN-
VIN+
VSS

FIG. 129

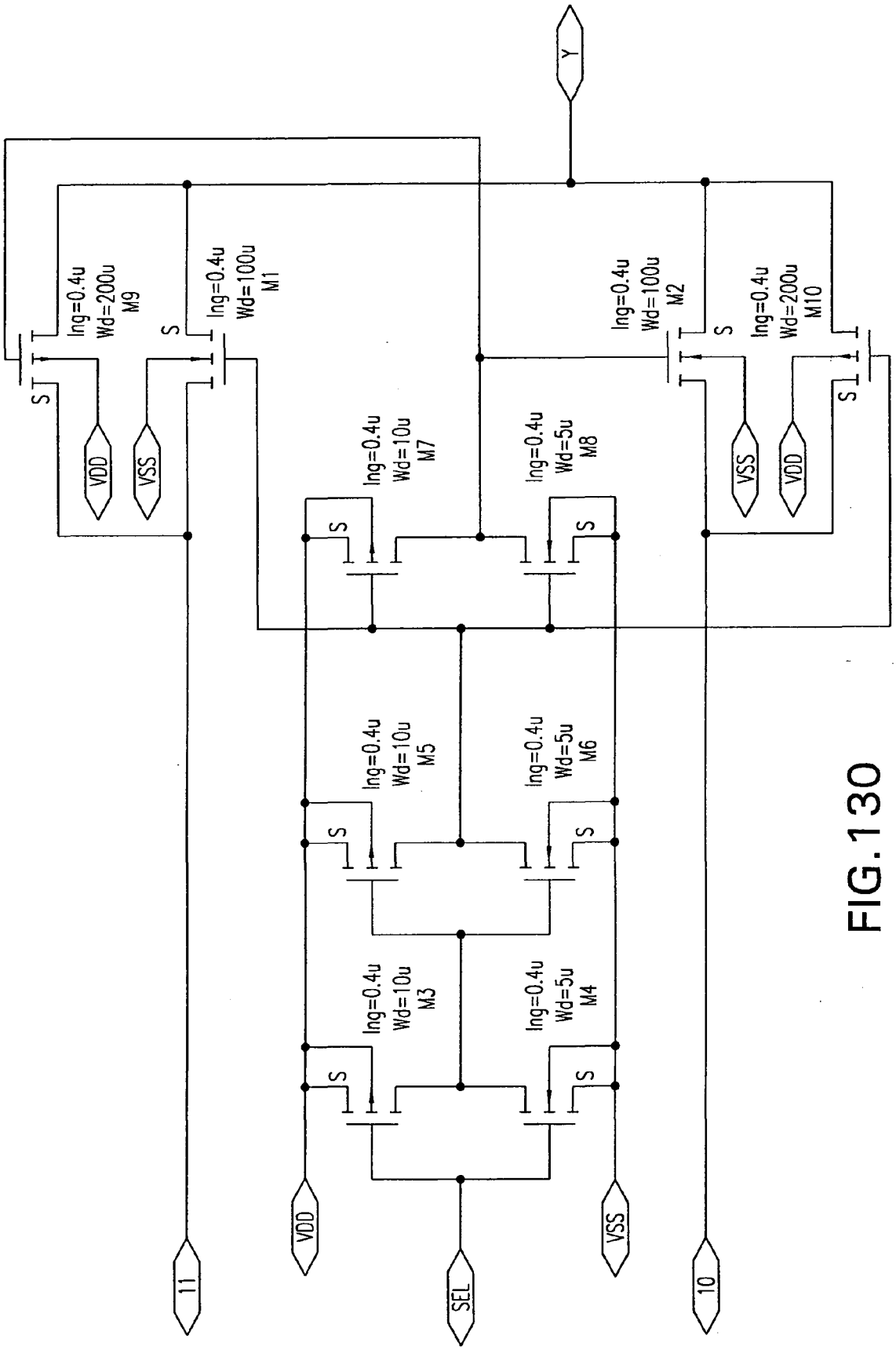
Y
lng=0.4u
Wd=200u
M9
lng=0.4u
Wd=100u
M1
lng=0.4u
Wd=100u
M2
lng=0.4u
Wd=200u
M10
S
VDD
VSS
lng=0.4u
Wd=10u
M7
lng=0.4u
Wd=5u
M8
lng=0.4u
Wd=10u
M5
lng=0.4u
Wd=5u
M6
lng=0.4u
Wd=10u
M3
lng=0.4u
Wd=5u
M4
11
SEL
10

FIG. 130

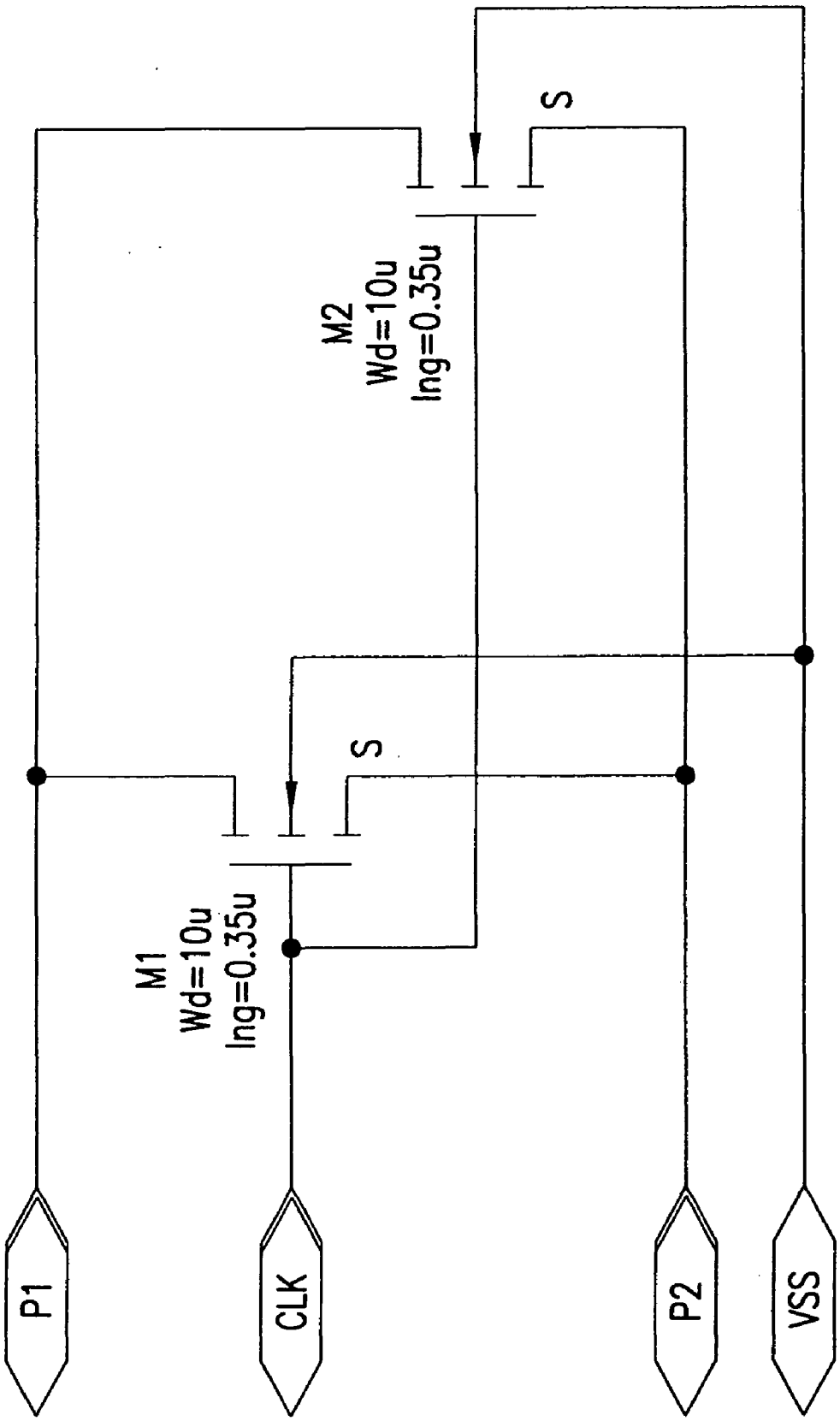

FIG. 131

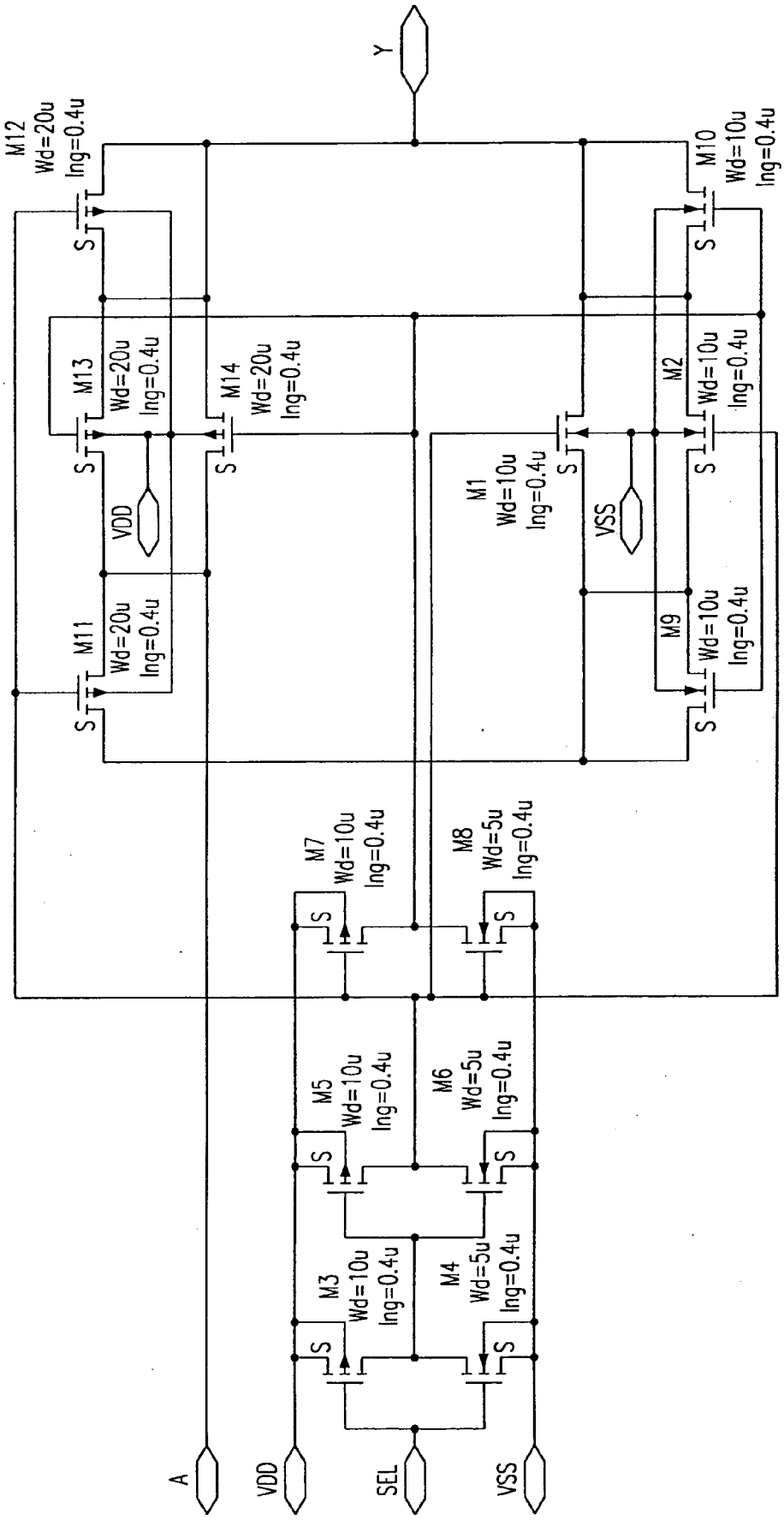
Y
M12
Wd=20u
lng=0.4u
M10
Wd=10u
lng=0.4u
M13
Wd=20u
lng=0.4u
M14
Wd=20u
lng=0.4u
M2
Wd=10u
lng=0.4u
M1
Wd=10u
lng=0.4u
VDD
VSS
M11
Wd=20u
lng=0.4u
M9
Wd=10u
lng=0.4u
M7
Wd=10u
lng=0.4u
M8
Wd=5u
lng=0.4u
M5
Wd=10u
lng=0.4u
M6
Wd=5u
lng=0.4u
M3
Wd=10u
lng=0.4u
M4
Wd=5u
lng=0.4u
S
A
VDD
SEL
VSS

FIG. 132

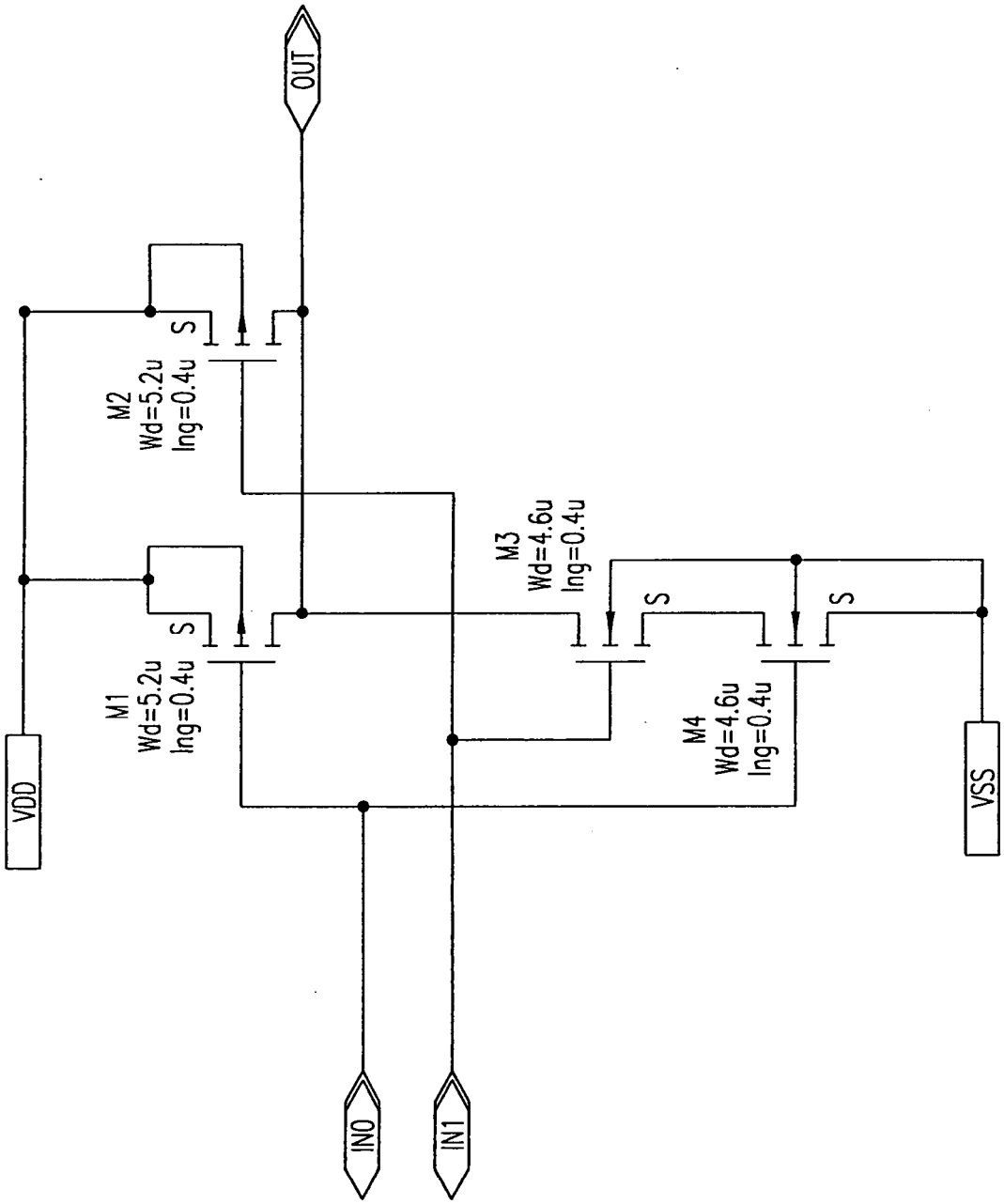
OUT
M2
Wd=5.2u
lng=0.4u
S
M1
Wd=5.2u
lng=0.4u
S
VDD
M3
Wd=4.6u
lng=0.4u
S
M4
Wd=4.6u
lng=0.4u
S
VSS
IN0
IN1

FIG. 133

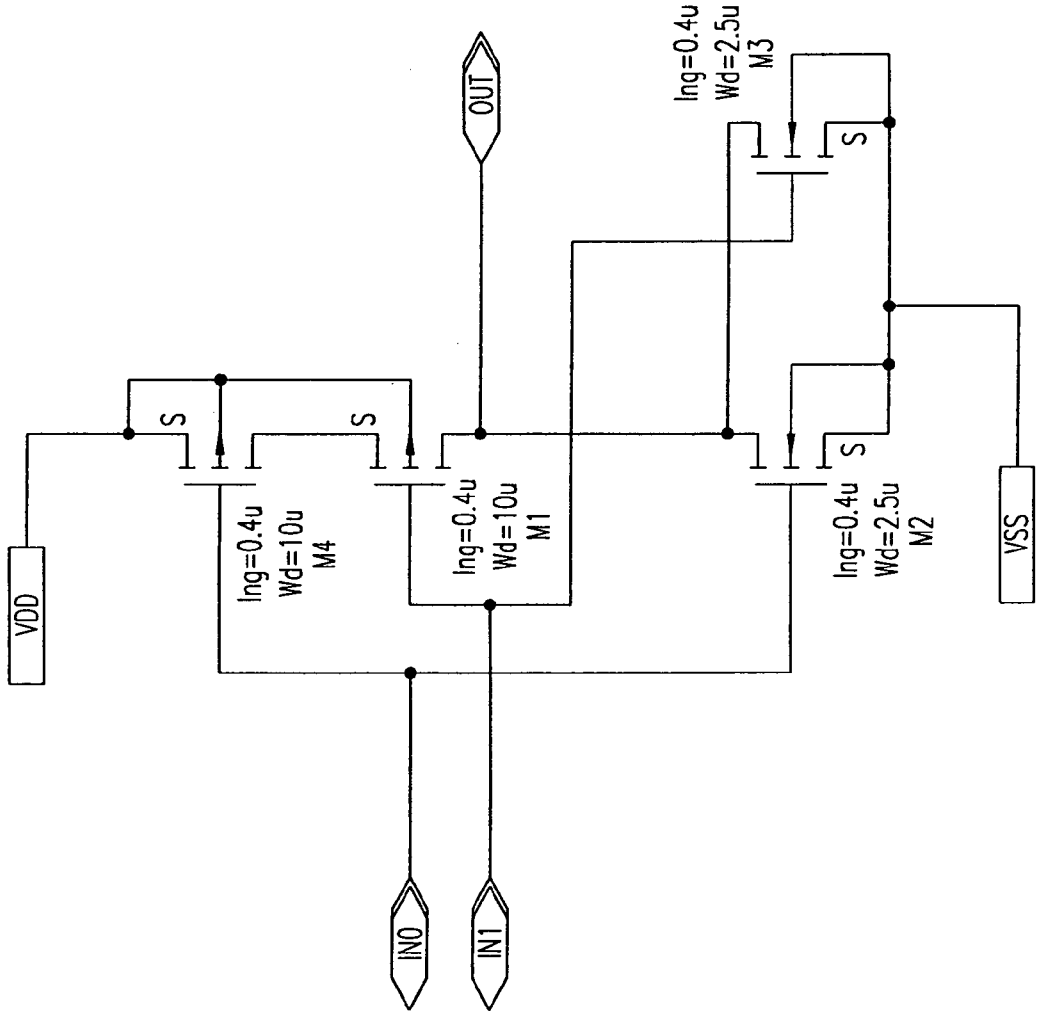
VDD
S
S
lng=0.4u
Wd=10u
M4
lng=0.4u
Wd=10u
M1
OUT
lng=0.4u
Wd=2.5u
M3
S
S
lng=0.4u
Wd=2.5u
M2
VSS
IN0
IN1

FIG. 134

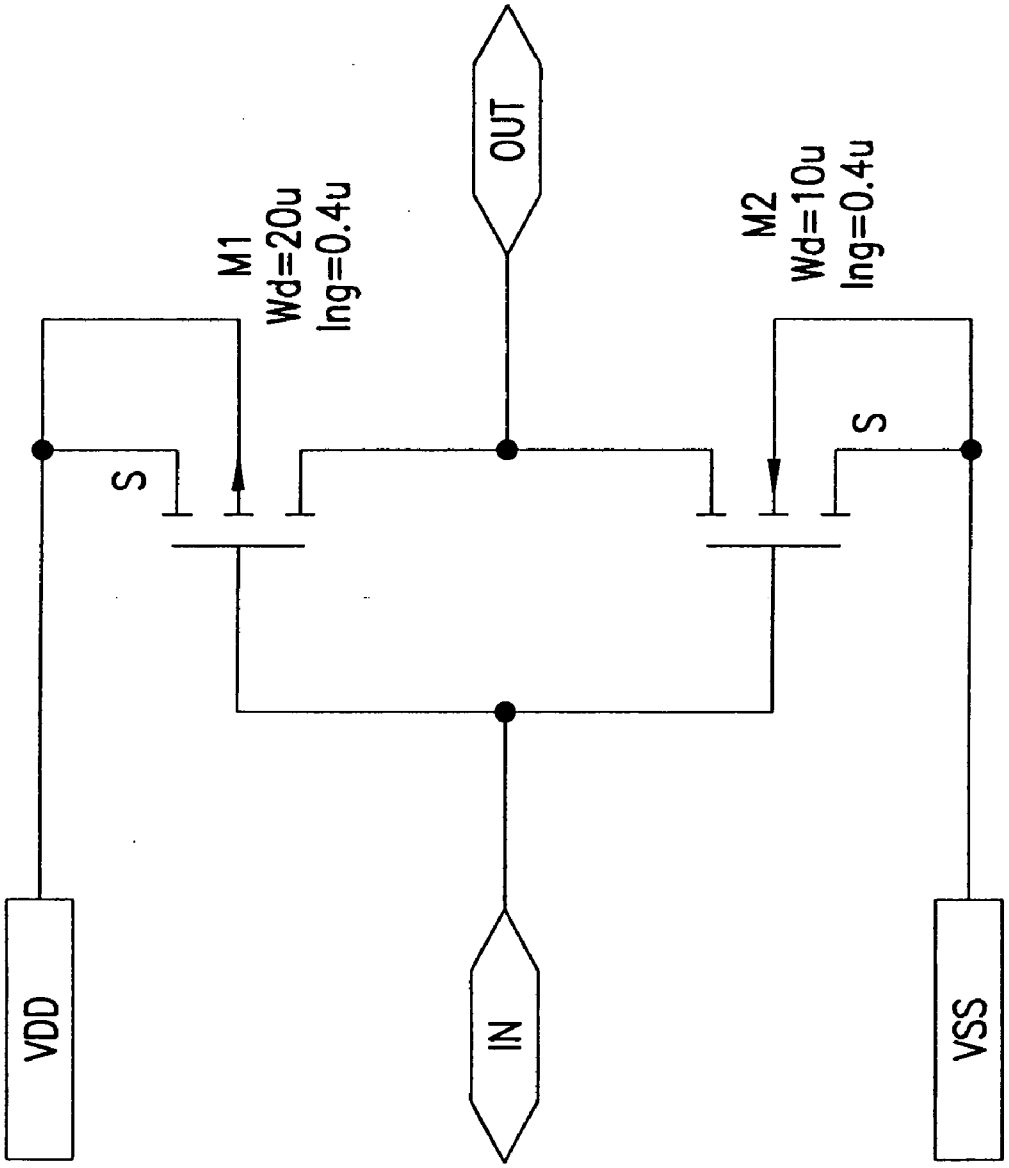

FIG.135

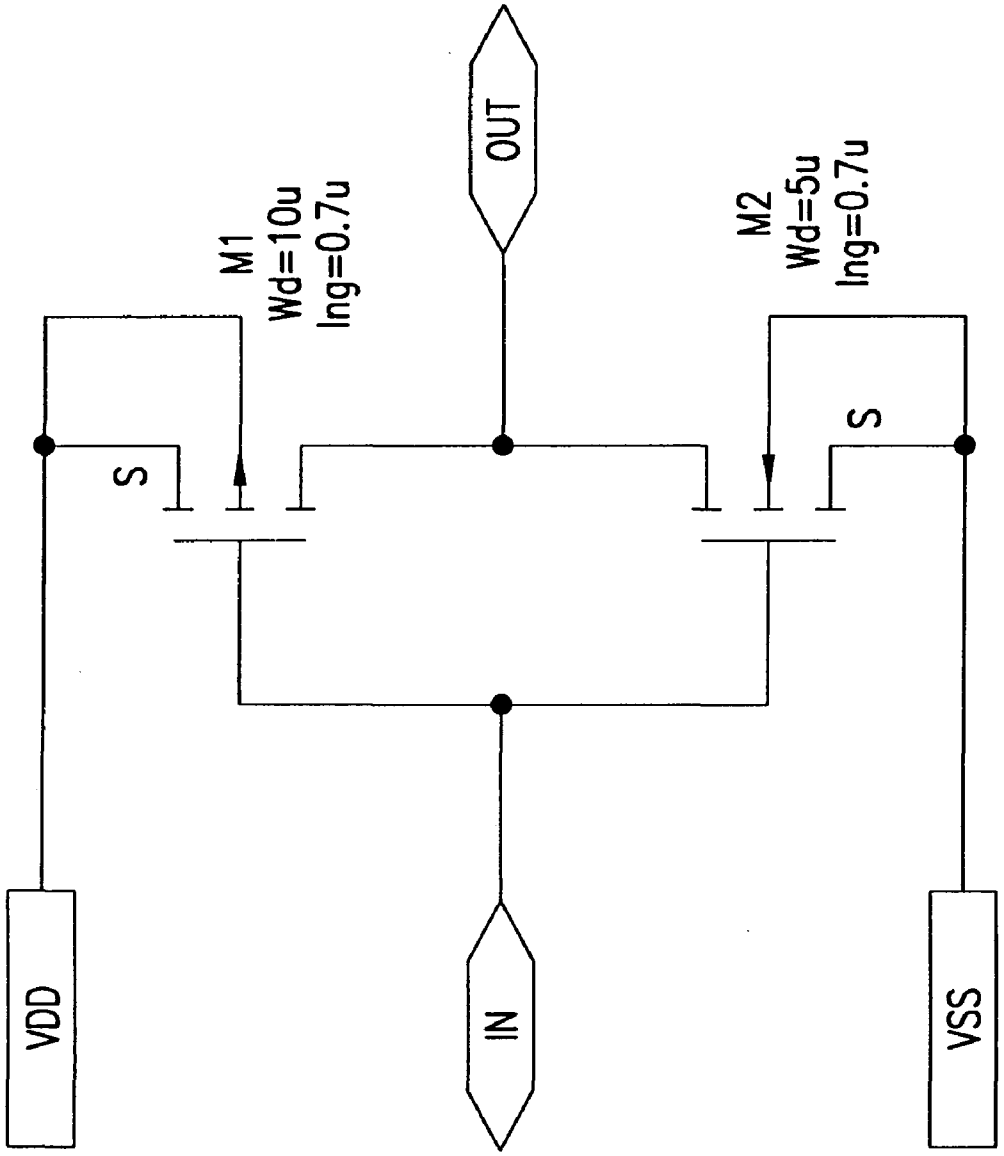

FIG.136

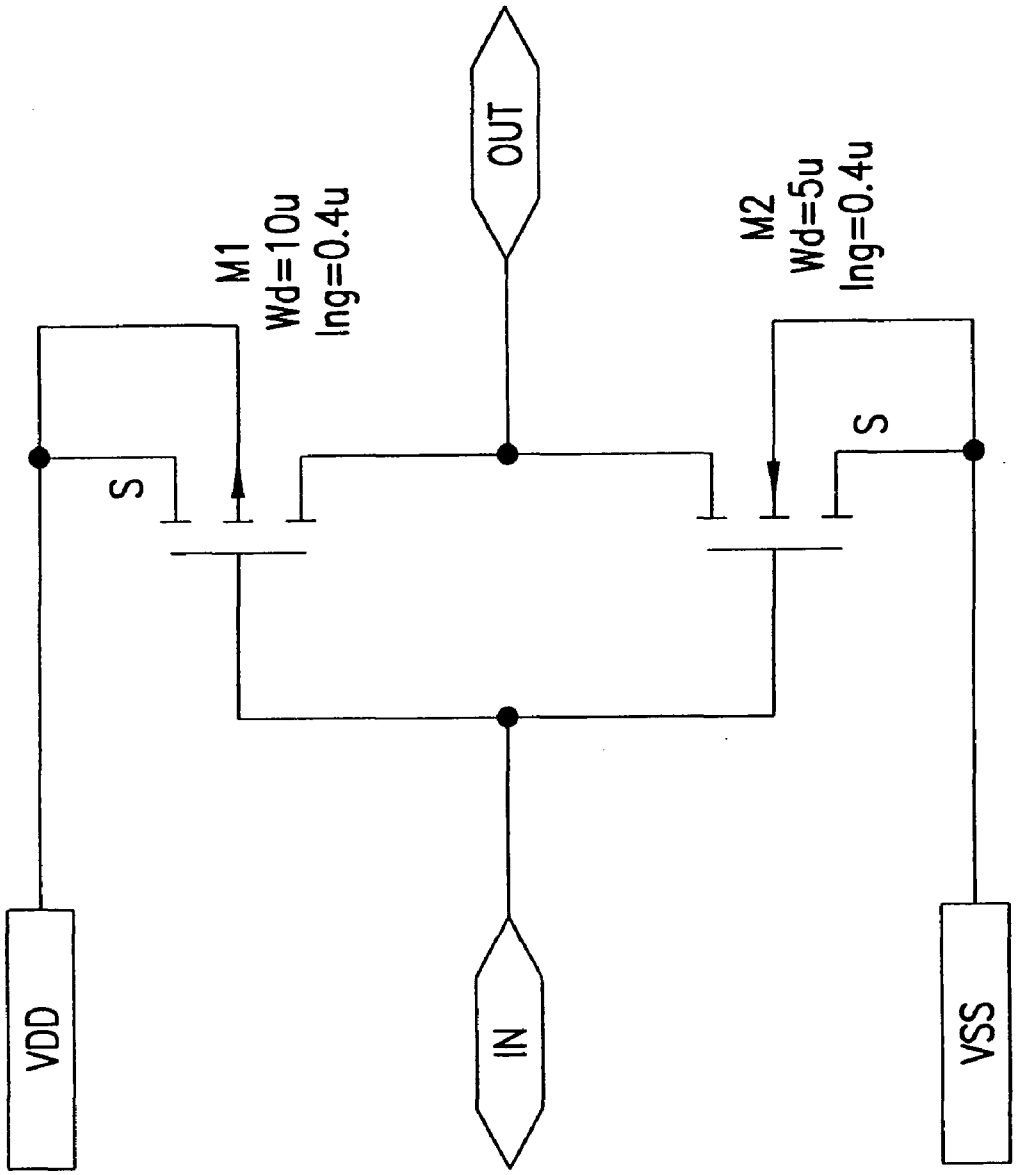

FIG.137

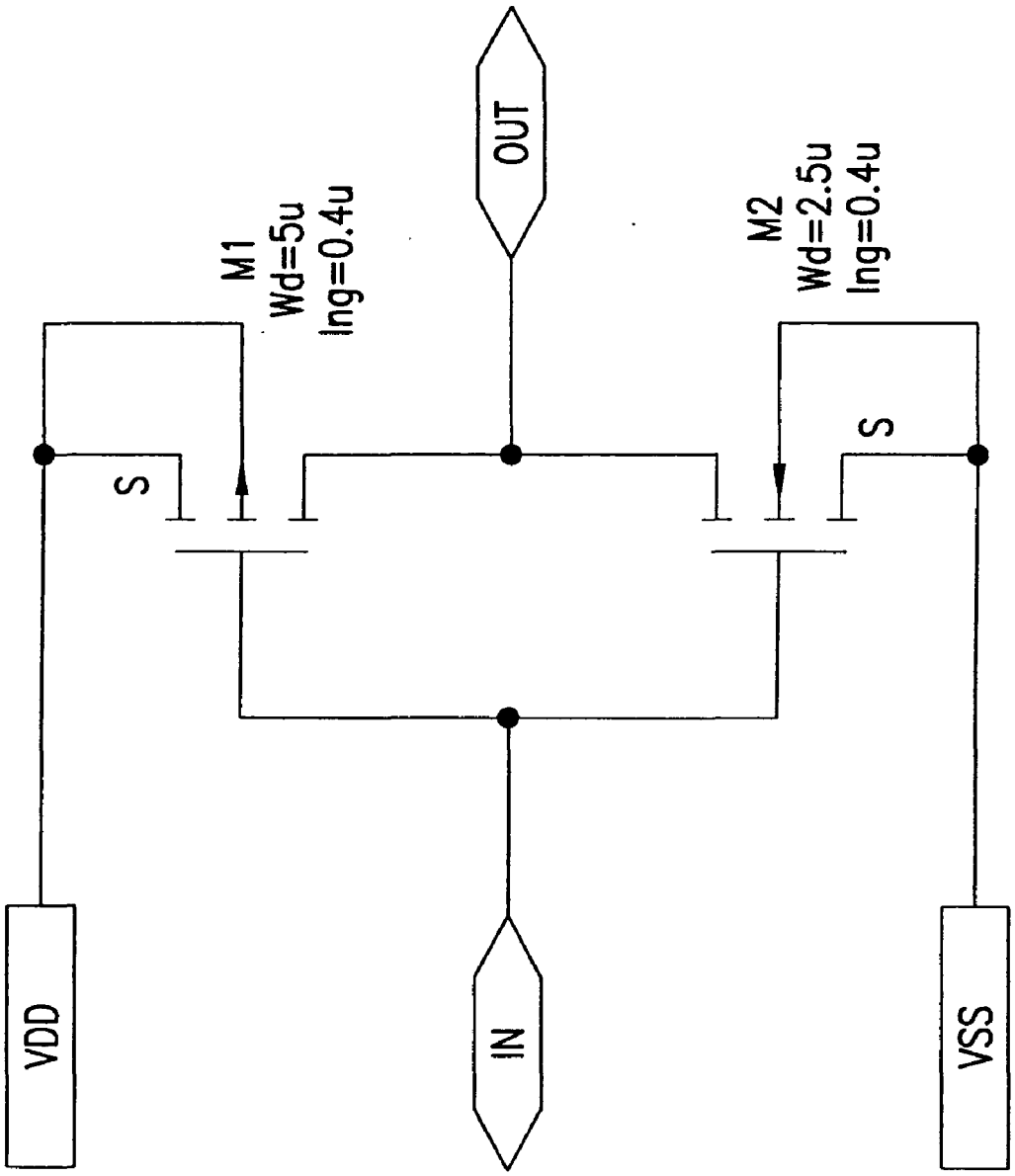

FIG.138

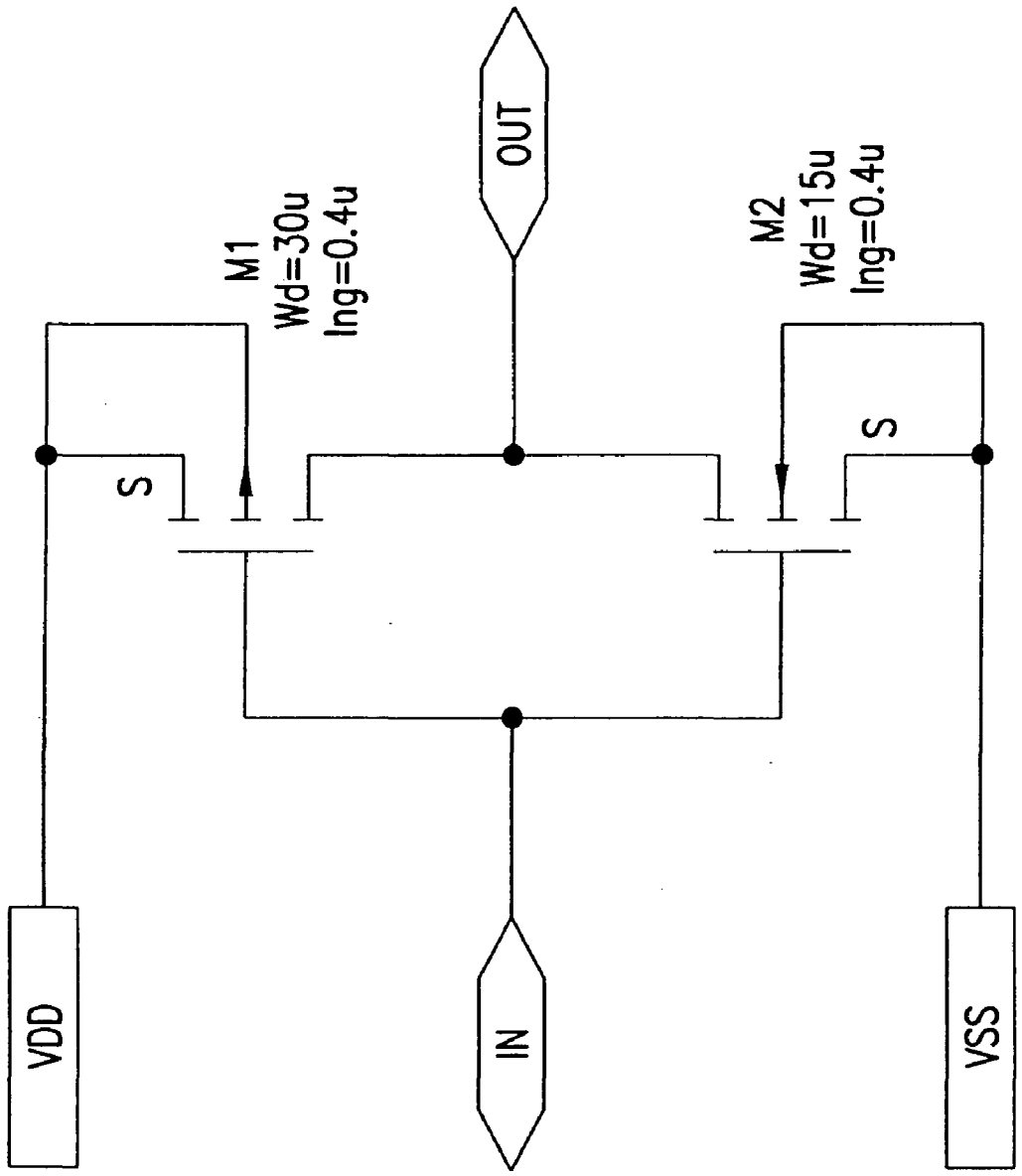

FIG.139

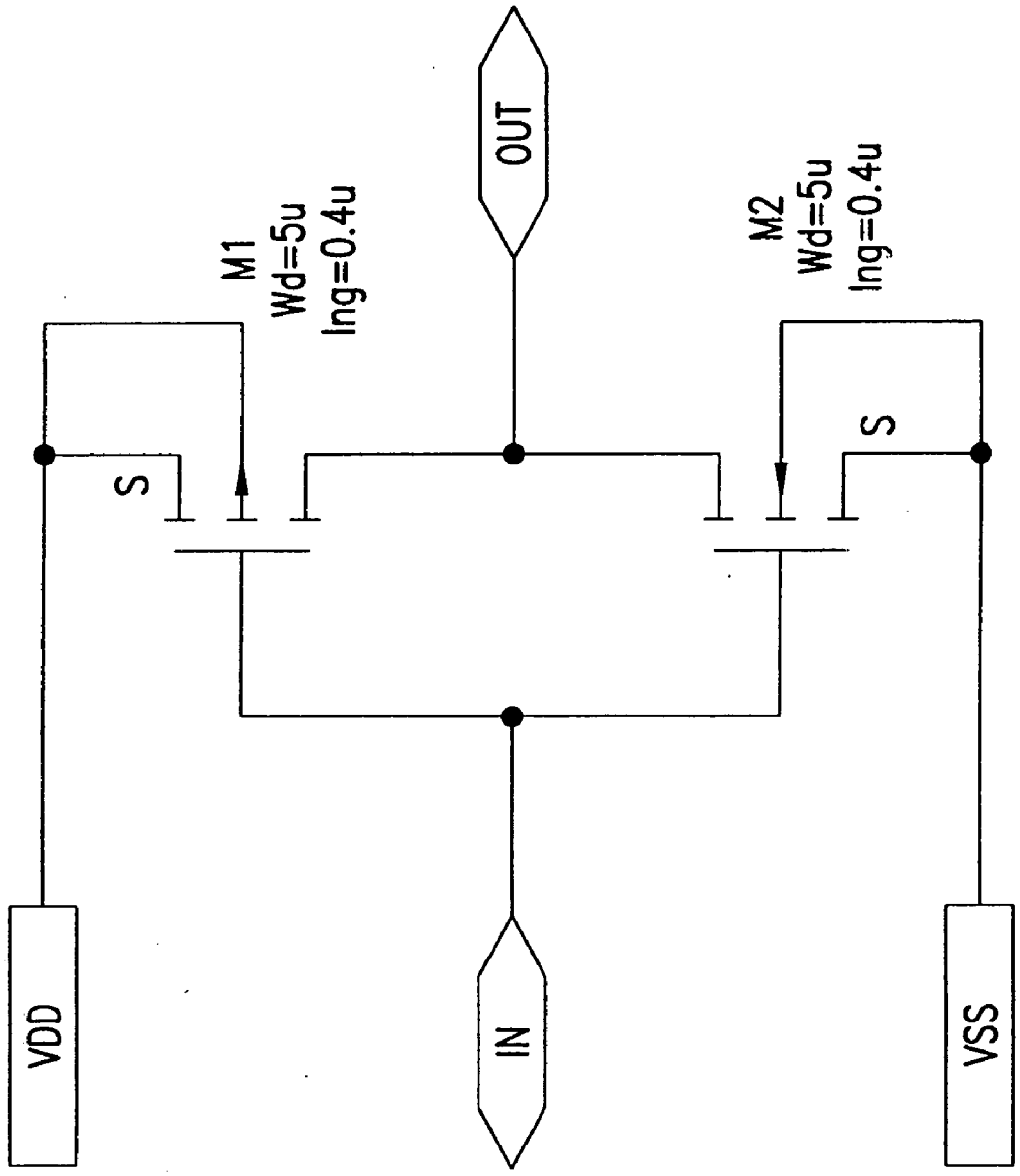

FIG.140

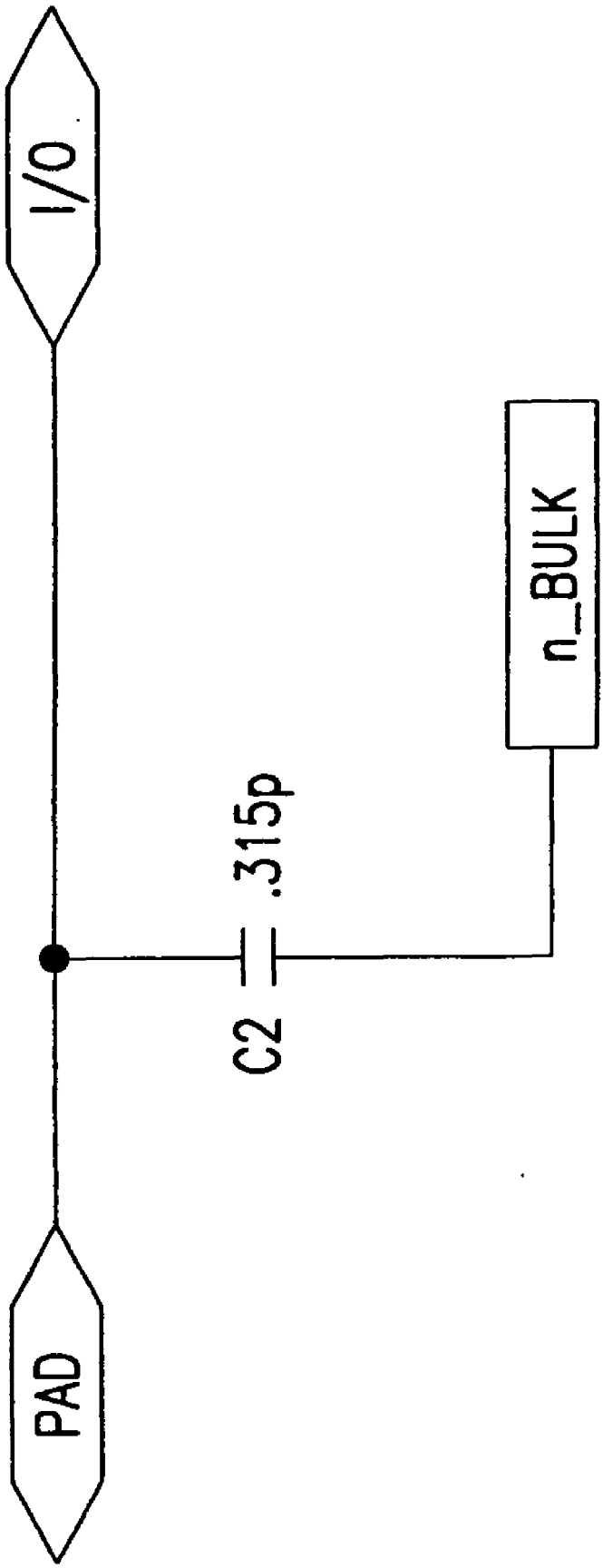

FIG. 141

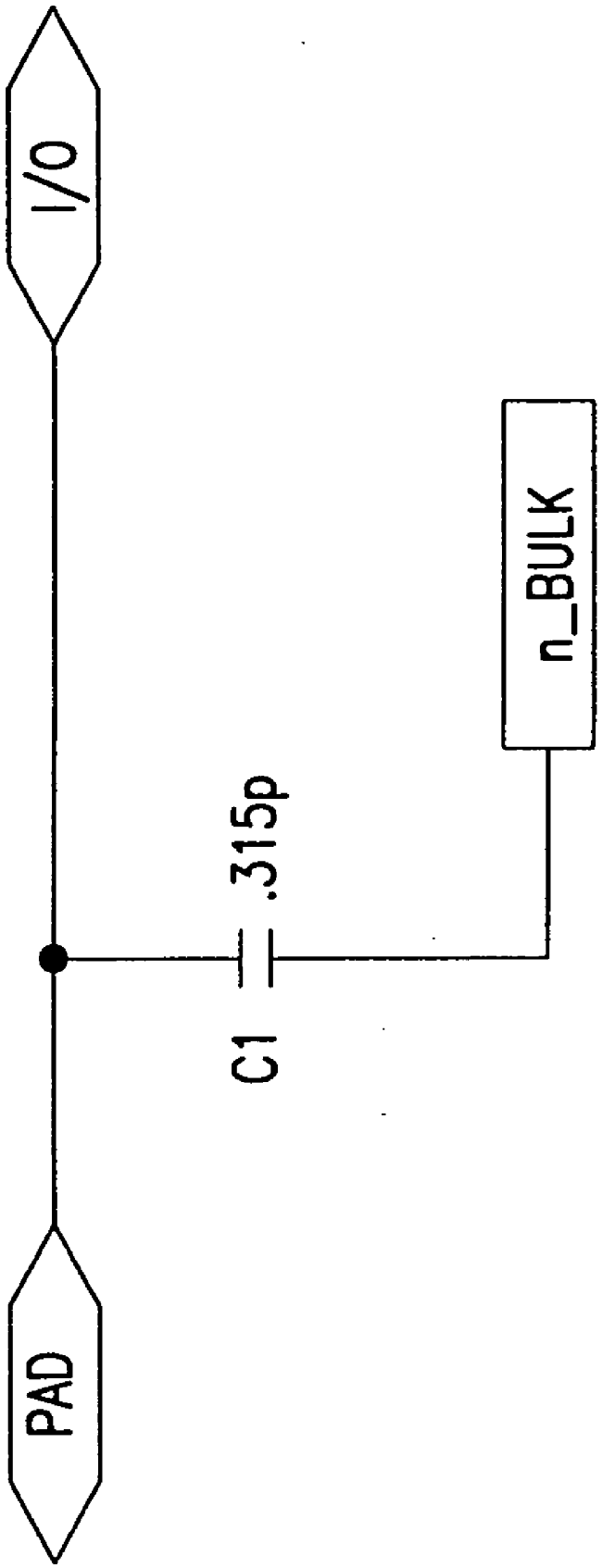

FIG. 142

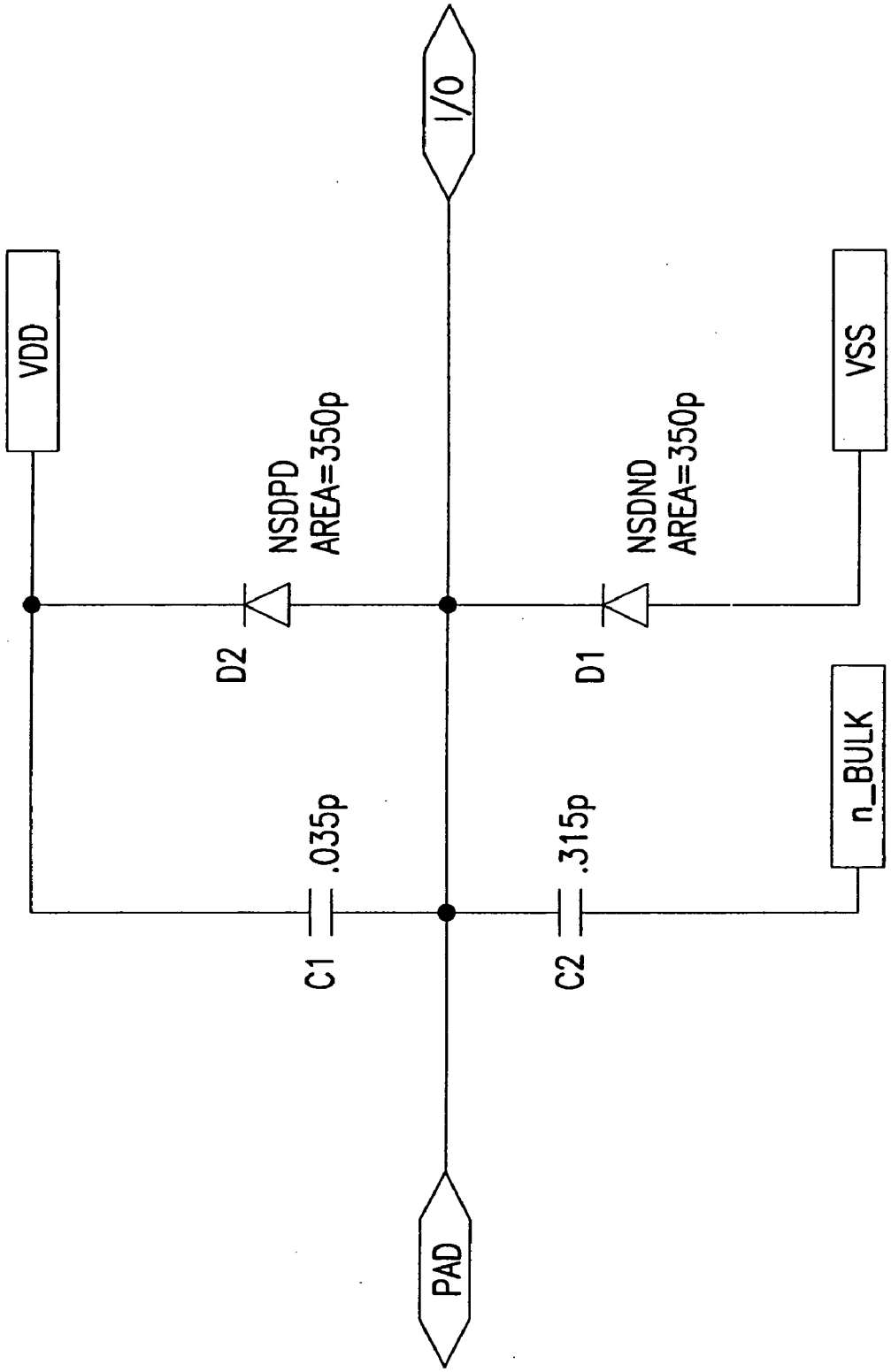
VDD
NSDPD
AREA=350p
D2
C1
.035p
PAD
I/O
C2
.315p
D1
NSDND
AREA=350p
VSS
n_BULK

FIG. 143

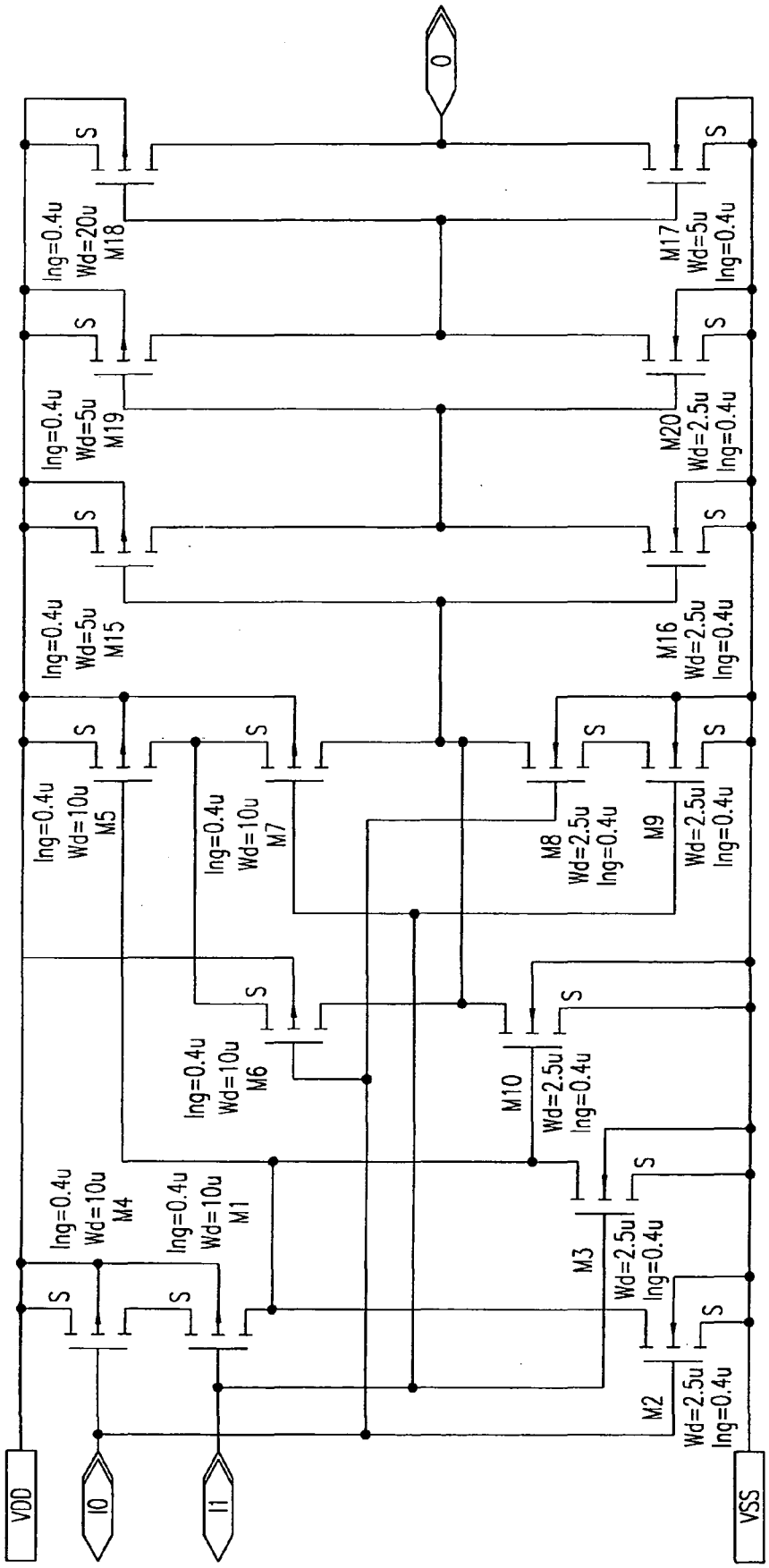
O
VDD
I0
I1
VSS
S
Ing=0.4u
Wd=20u
M18
M17
Wd=5u
Ing=0.4u
Ing=0.4u
Wd=5u
M19
M20
Wd=2.5u
Ing=0.4u
Ing=0.4u
Wd=5u
M15
M16
Wd=2.5u
Ing=0.4u
Ing=0.4u
Wd=10u
M5
Ing=0.4u
Wd=10u
M7
M8
Wd=2.5u
Ing=0.4u
M9
Wd=2.5u
Ing=0.4u
Ing=0.4u
Wd=10u
M6
M10
Wd=2.5u
Ing=0.4u
Ing=0.4u
Wd=10u
M4
Ing=0.4u
Wd=10u
M1
M3
Wd=2.5u
Ing=0.4u
M2
Wd=2.5u
Ing=0.4u

FIG.144

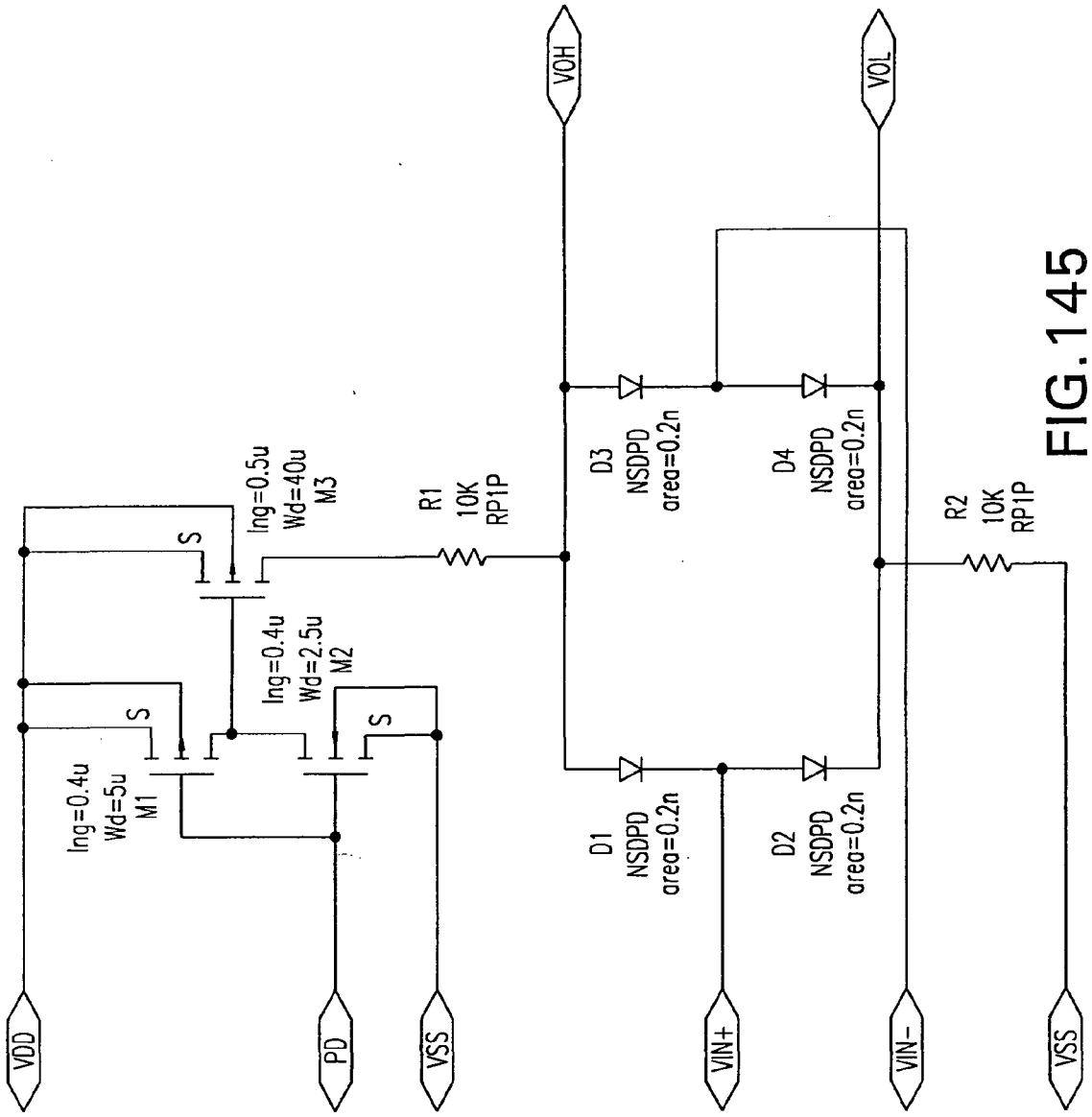
VDD
PD
VSS
VIN+
VIN-
VSS
VOH
VOL
lng=0.4u
Wd=5u
M1
lng=0.4u
Wd=2.5u
M2
lng=0.5u
Wd=40u
M3
S
S
S
R1
10K
RP1P
R2
10K
RP1P
D1
NSDPD
area=0.2n
D2
NSDPD
area=0.2n
D3
NSDPD
area=0.2n
D4
NSDPD
area=0.2n

FIG. 145

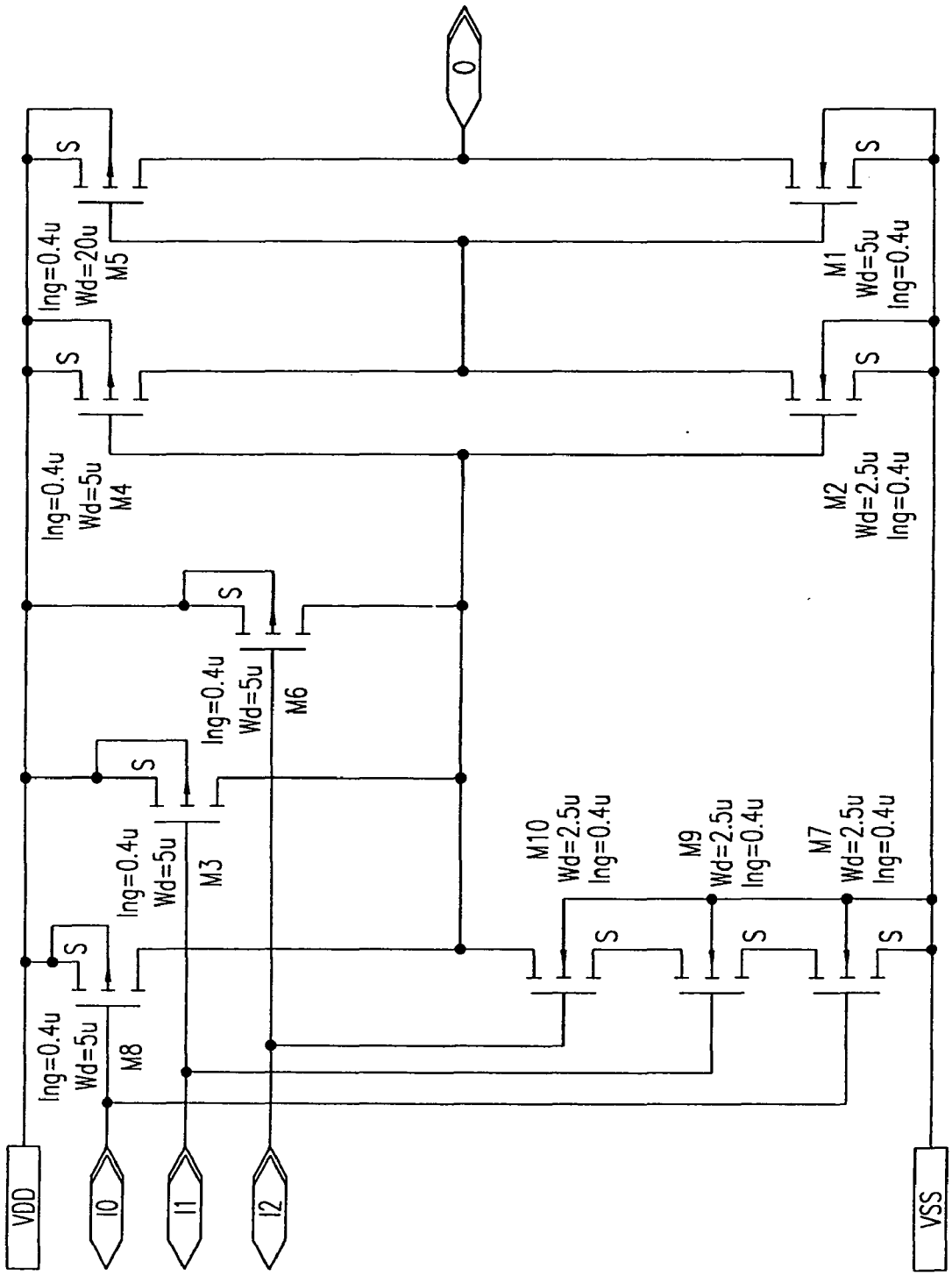
O
S
lng=0.4u
Wd=20u
M5
M1
Wd=5u
lng=0.4u
lng=0.4u
Wd=5u
M4
M2
Wd=2.5u
lng=0.4u
lng=0.4u
Wd=5u
M6
lng=0.4u
Wd=5u
M3
M10
Wd=2.5u
lng=0.4u
M9
Wd=2.5u
lng=0.4u
M7
Wd=2.5u
lng=0.4u
lng=0.4u
Wd=5u
M8
VDD
I0
I1
I2
VSS

FIG.146

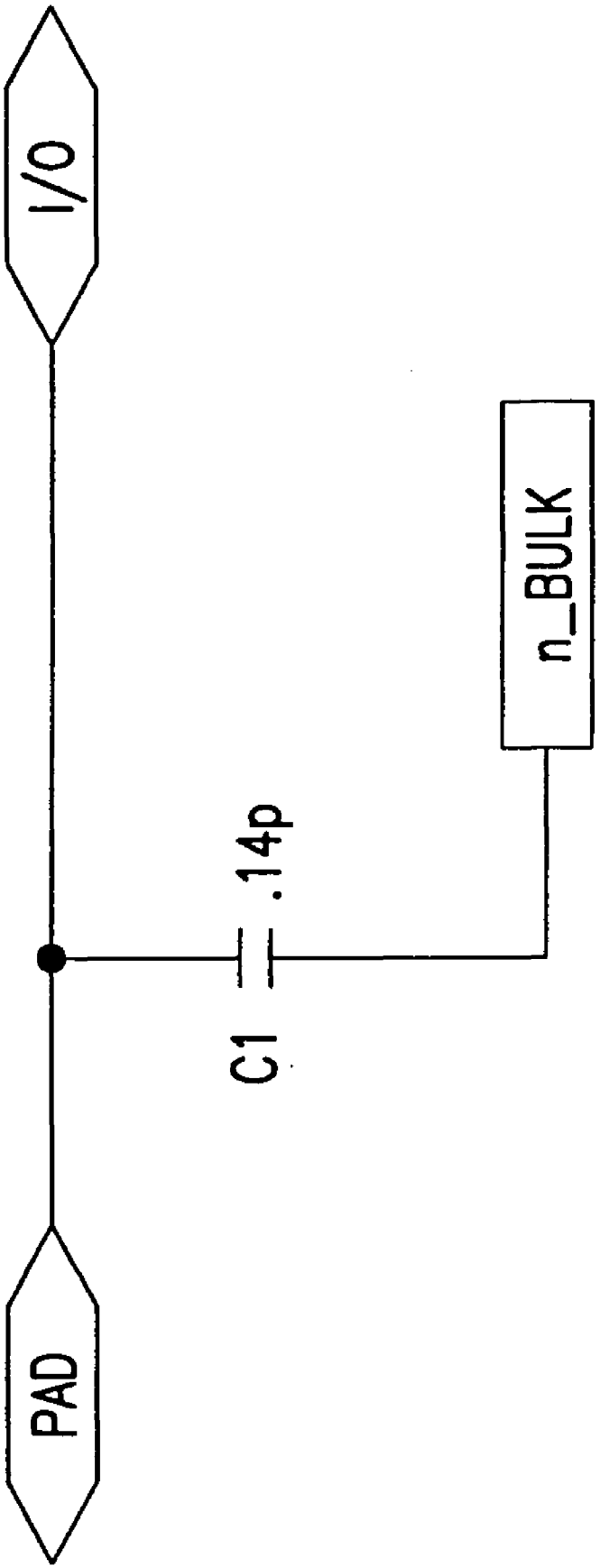

FIG.147

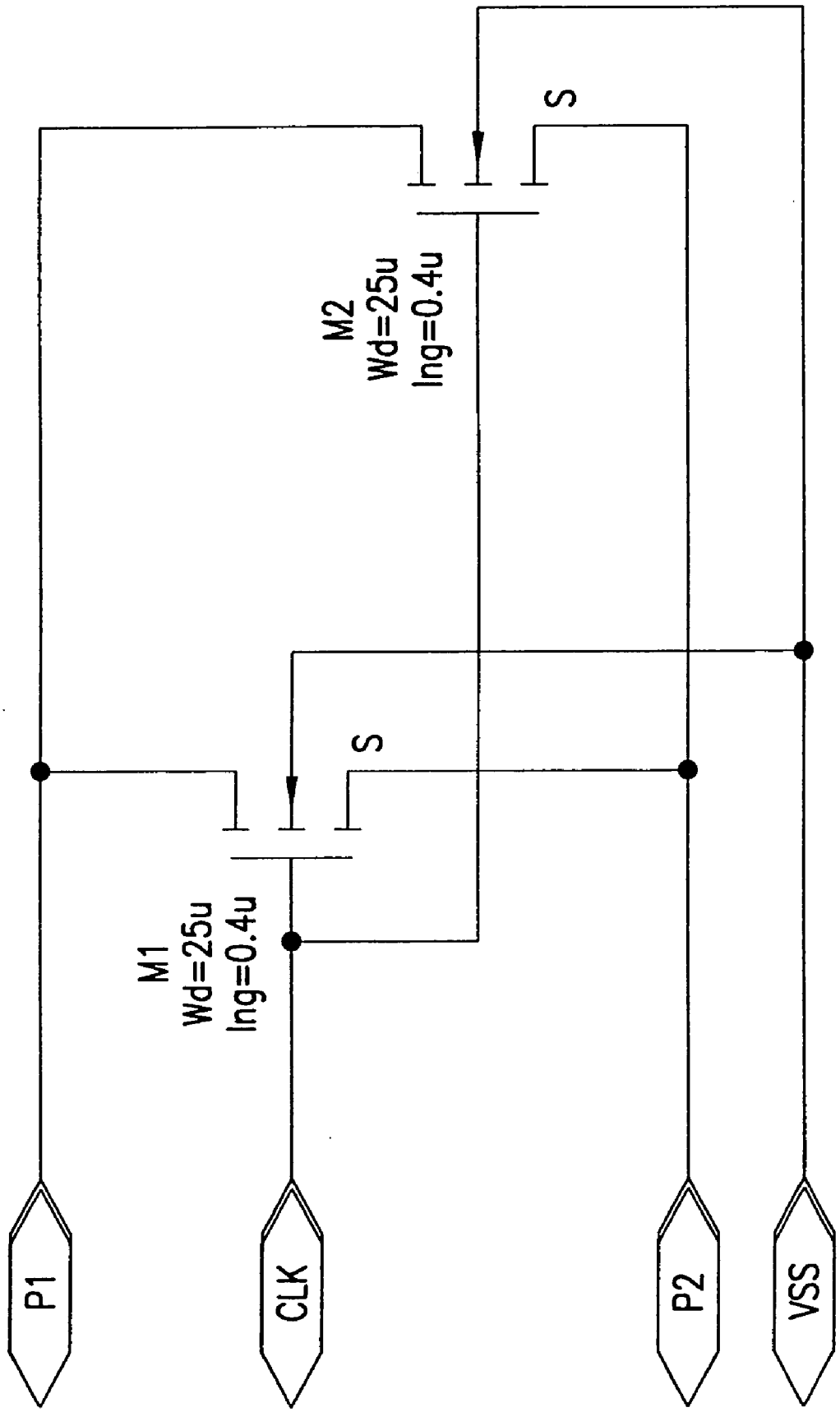

FIG.148

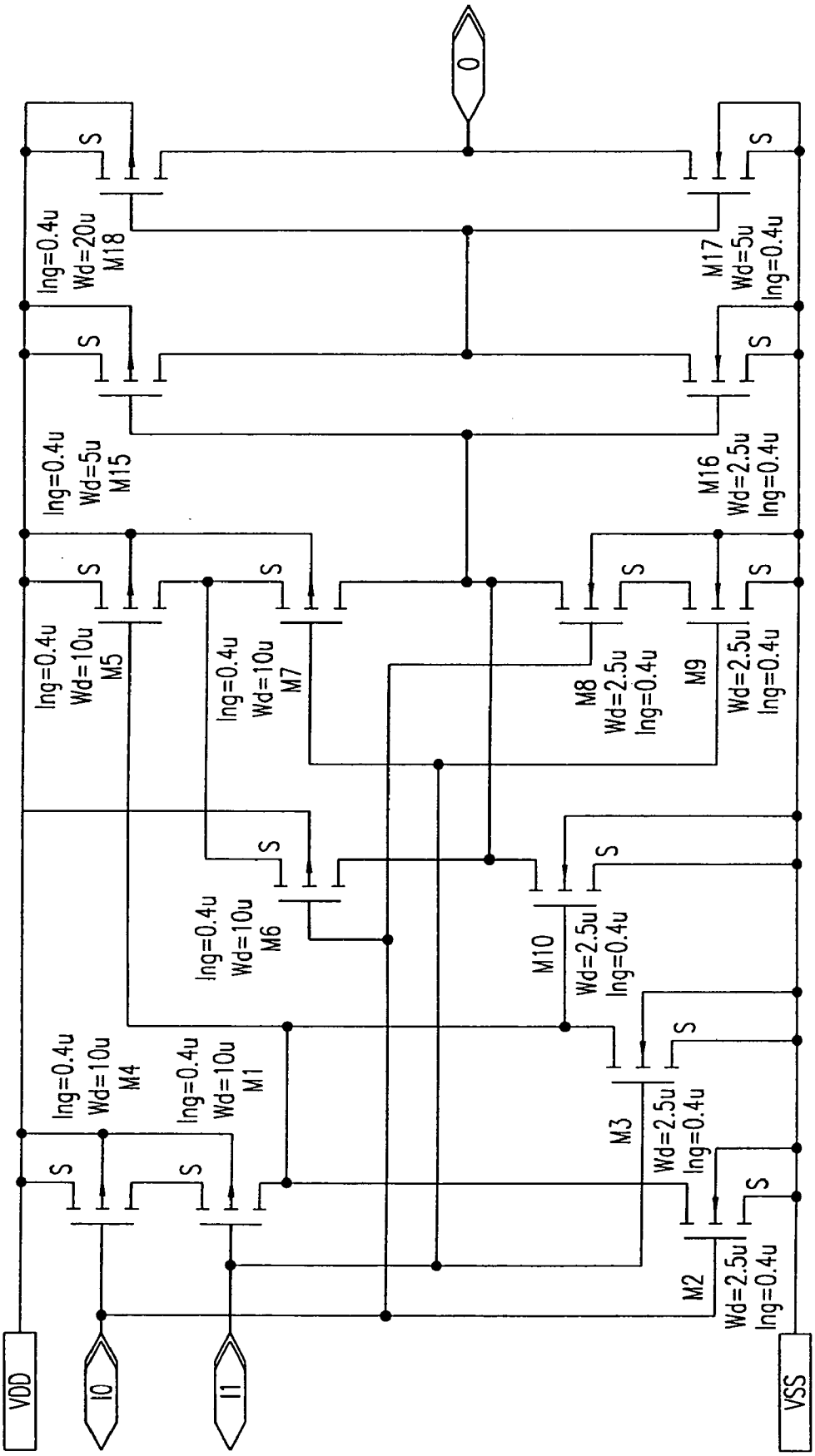
O
S
lng=0.4u
Wd=20u
M18
M17
Wd=5u
lng=0.4u
lng=0.4u
Wd=5u
M15
M16
Wd=2.5u
lng=0.4u
lng=0.4u
Wd=10u
M5
lng=0.4u
Wd=10u
M7
M8
Wd=2.5u
lng=0.4u
M9
Wd=2.5u
lng=0.4u
lng=0.4u
Wd=10u
M6
M10
Wd=2.5u
lng=0.4u
lng=0.4u
Wd=10u
M4
lng=0.4u
Wd=10u
M1
M3
Wd=2.5u
lng=0.4u
M2
Wd=2.5u
lng=0.4u
VDD
I0
I1
VSS

FIG.149

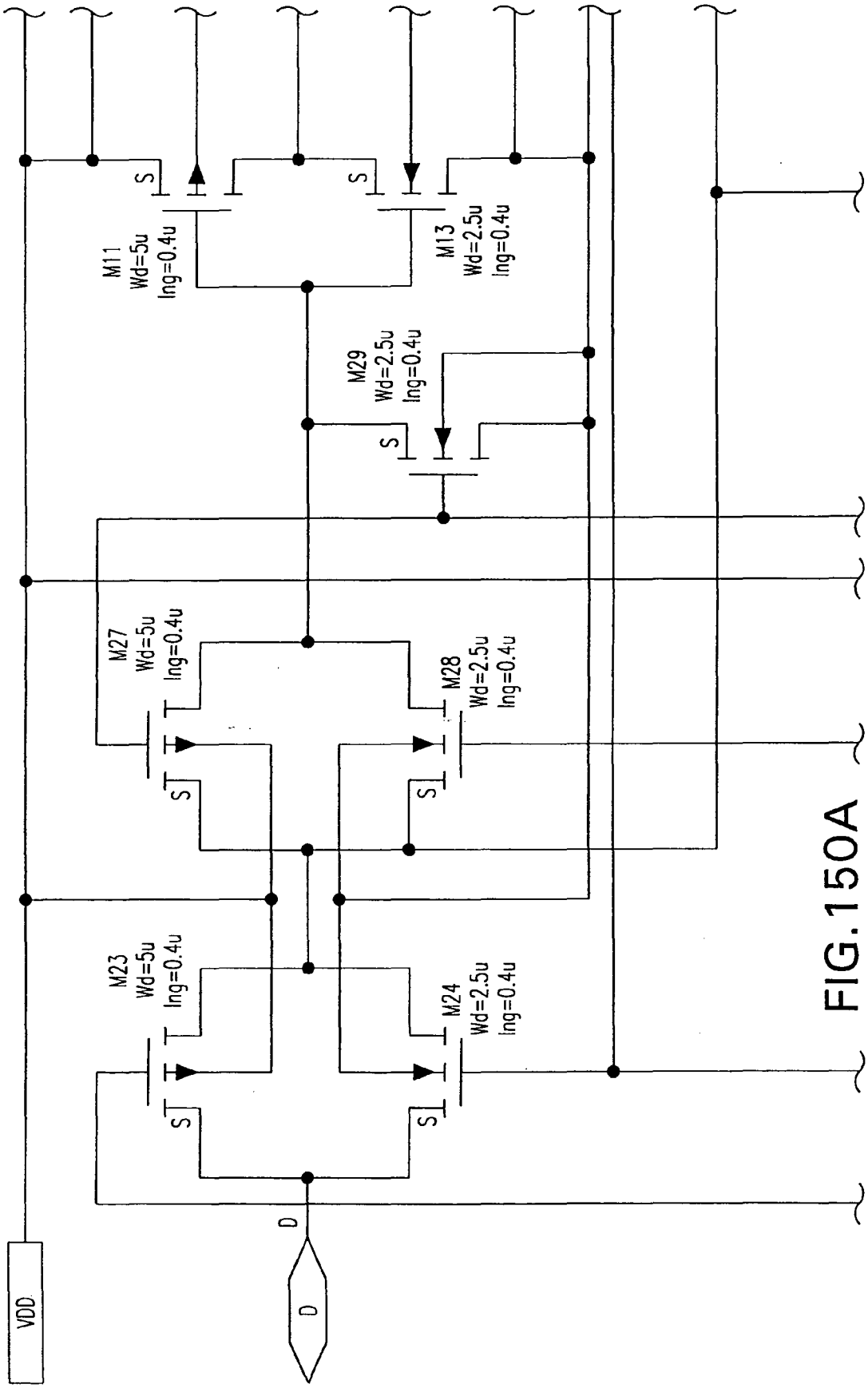
M11
Wd=5u
lng=0.4u
M13
Wd=2.5u
lng=0.4u
M29
Wd=2.5u
lng=0.4u
M27
Wd=5u
lng=0.4u
M28
Wd=2.5u
lng=0.4u
M23
Wd=5u
lng=0.4u
M24
Wd=2.5u
lng=0.4u
S
D
VDD

FIG.150A

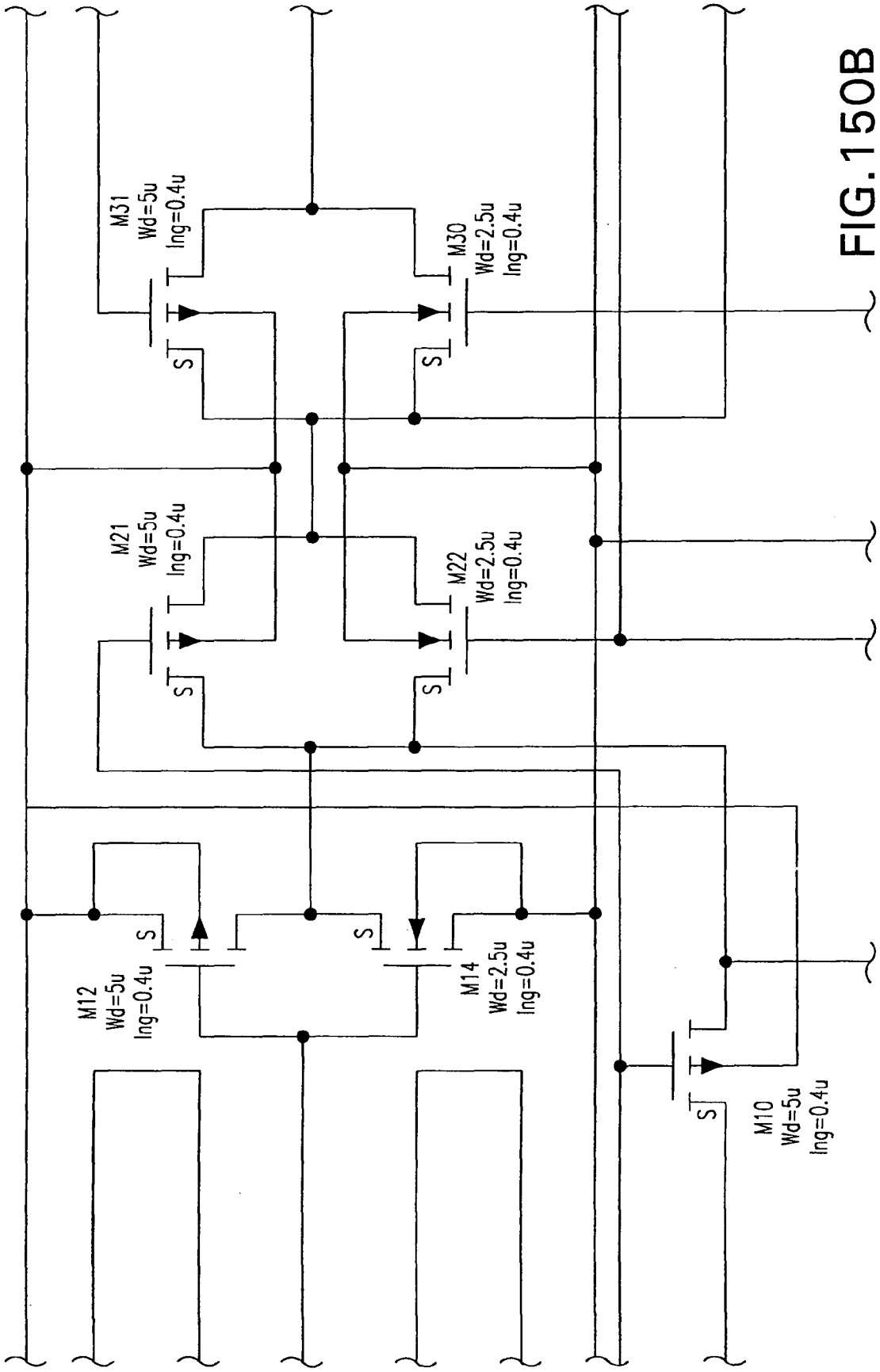
M31
Wd=5u
lng=0.4u
M30
Wd=2.5u
lng=0.4u
M21
Wd=5u
lng=0.4u
M22
Wd=2.5u
lng=0.4u
M12
Wd=5u
lng=0.4u
M14
Wd=2.5u
lng=0.4u
M10
Wd=5u
lng=0.4u
S

FIG. 150B

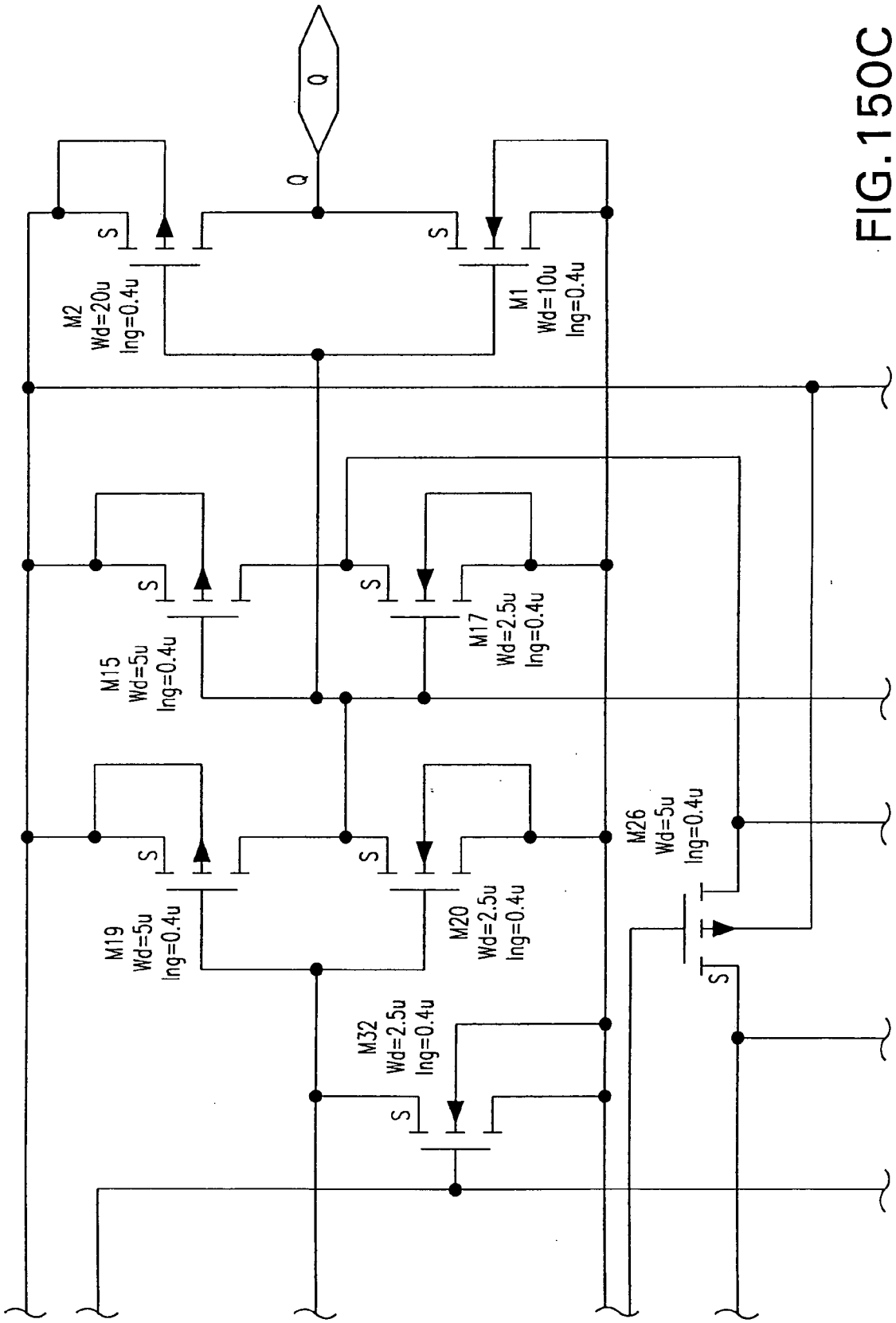
Q
Q
S
M2
Wd=20u
lng=0.4u
S
M1
Wd=10u
lng=0.4u
S
M15
Wd=5u
lng=0.4u
S
M17
Wd=2.5u
lng=0.4u
S
M19
Wd=5u
lng=0.4u
S
M20
Wd=2.5u
lng=0.4u
M26
Wd=5u
lng=0.4u
S
M32
Wd=2.5u
lng=0.4u
S

FIG.150C

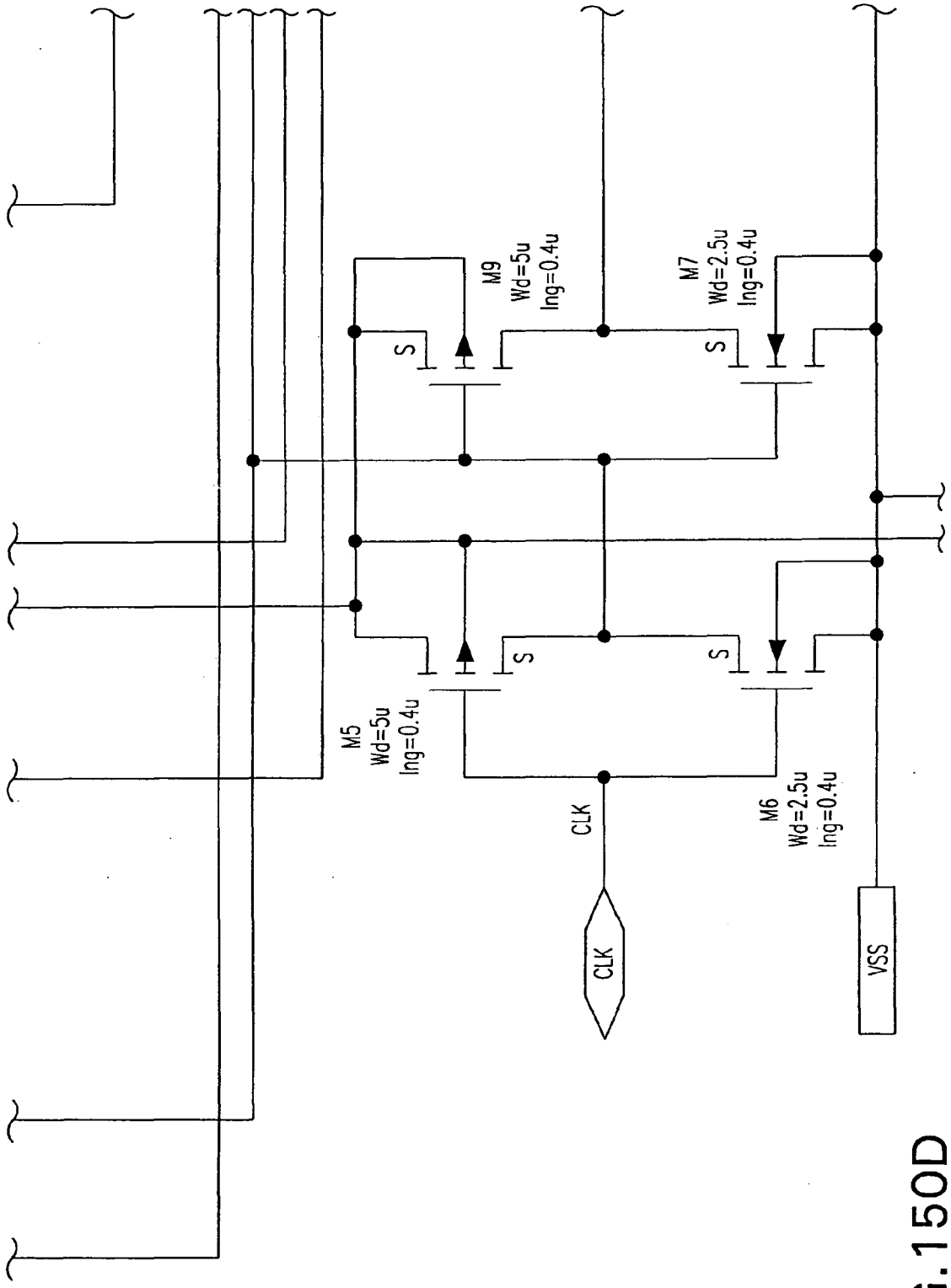
M9
Wd=5u
lng=0.4u
M7
Wd=2.5u
lng=0.4u
S
S
S
S
M5
Wd=5u
lng=0.4u
M6
Wd=2.5u
lng=0.4u
CLK
CLK
VSS

FIG.150D

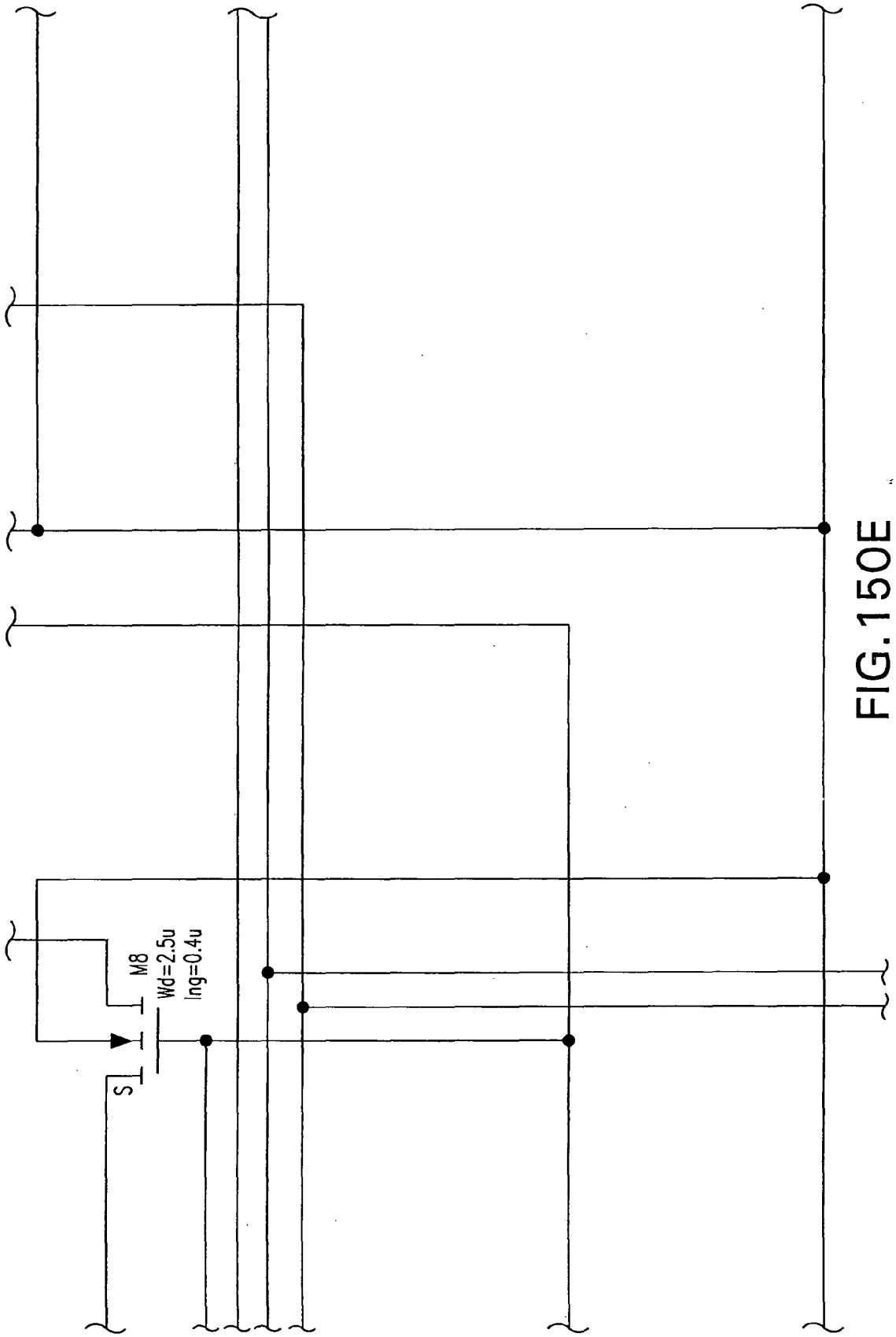

FIG. 150E

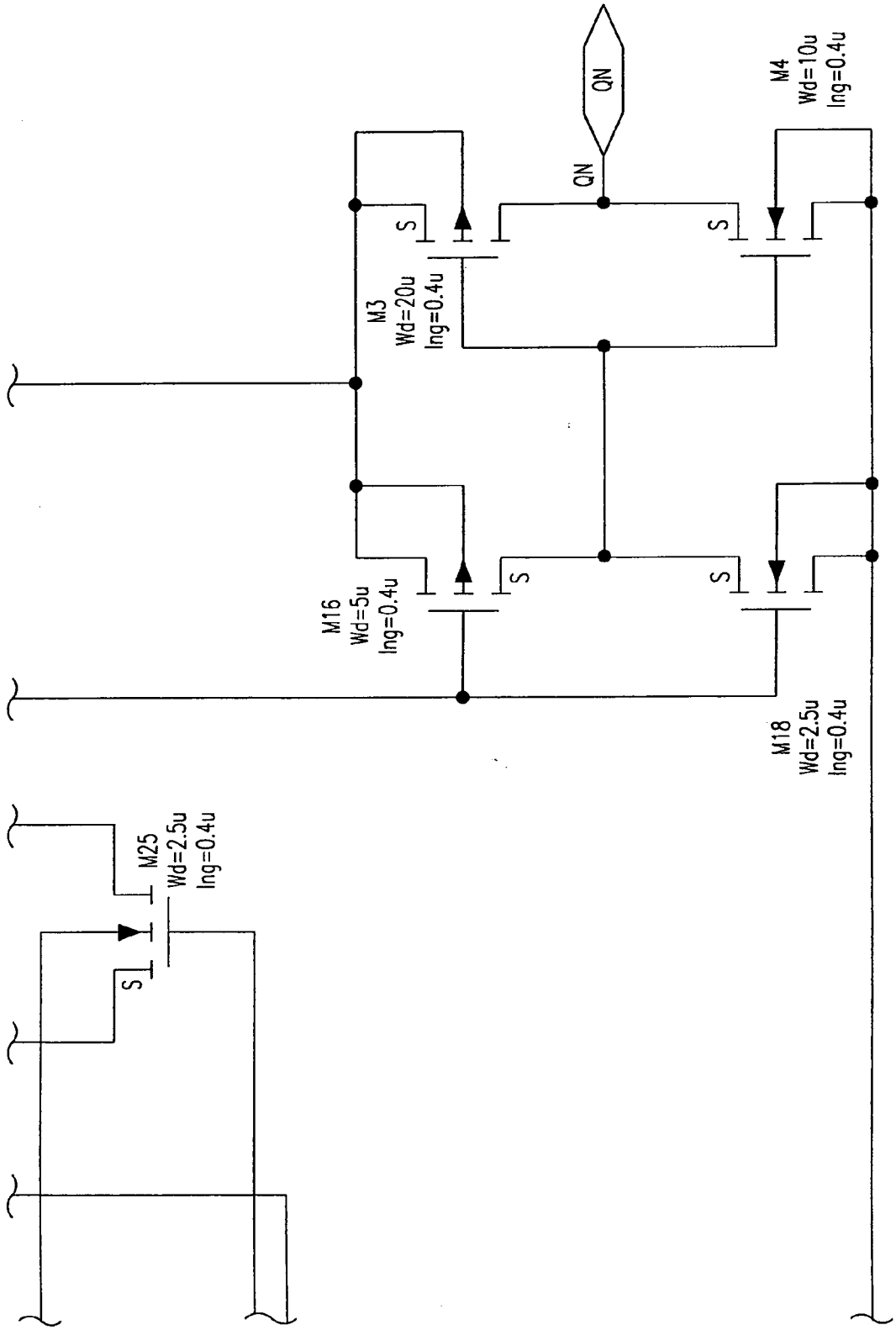
QN
QN
M4
Wd=10u
lng=0.4u
M3
Wd=20u
lng=0.4u
M16
Wd=5u
lng=0.4u
M18
Wd=2.5u
lng=0.4u
M25
Wd=2.5u
lng=0.4u
S

FIG. 150F

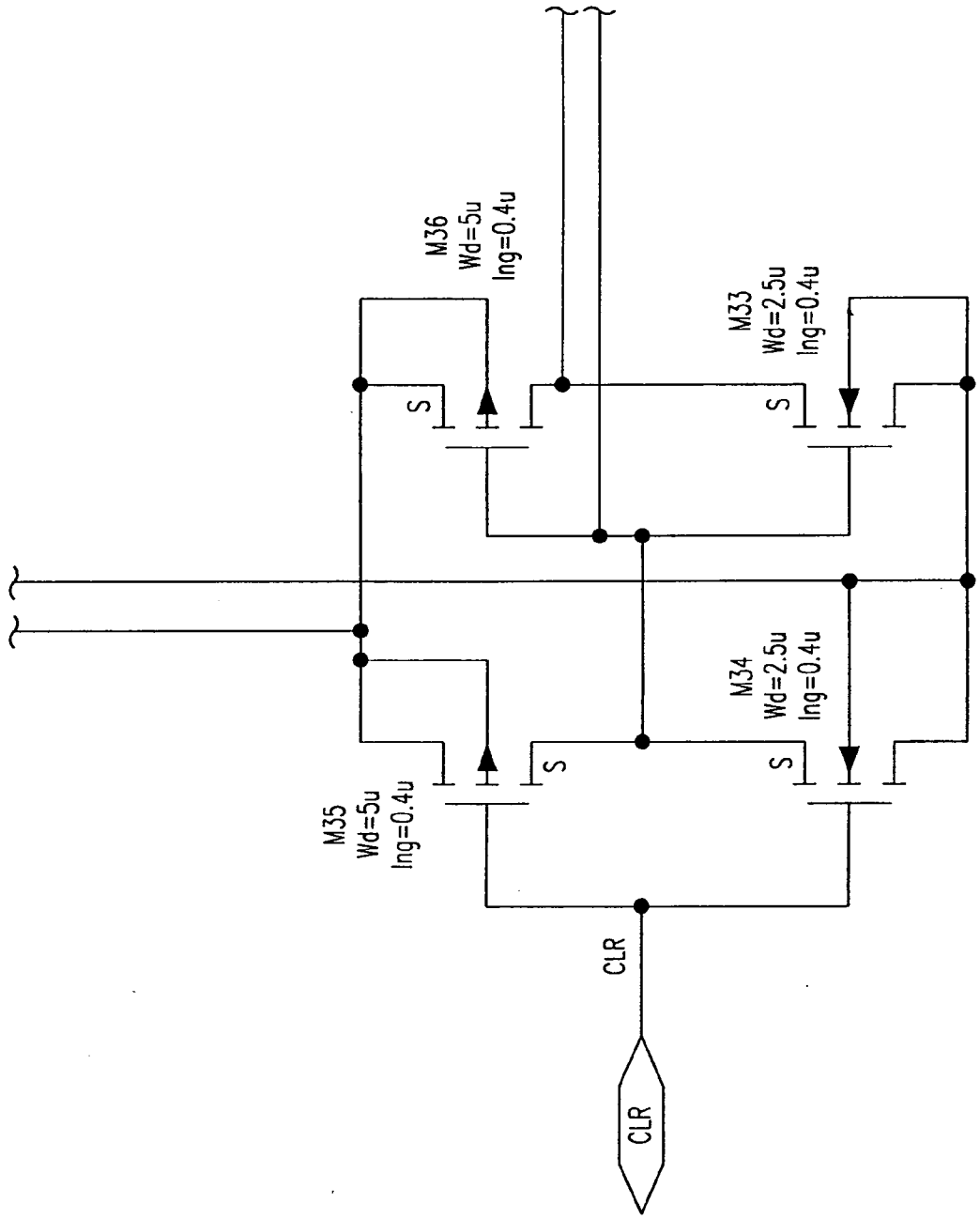
M36
Wd=5u
lng=0.4u
M33
Wd=2.5u
lng=0.4u
S
S
M34
Wd=2.5u
lng=0.4u
M35
Wd=5u
lng=0.4u
S
S
CLR
CLR

FIG.150G

FIG. 150H

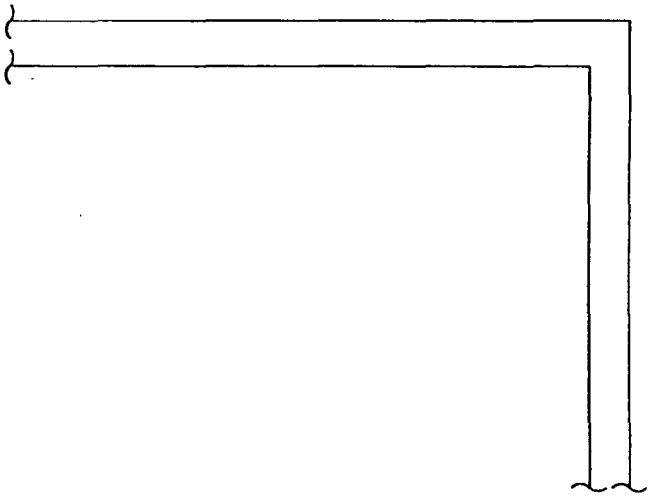

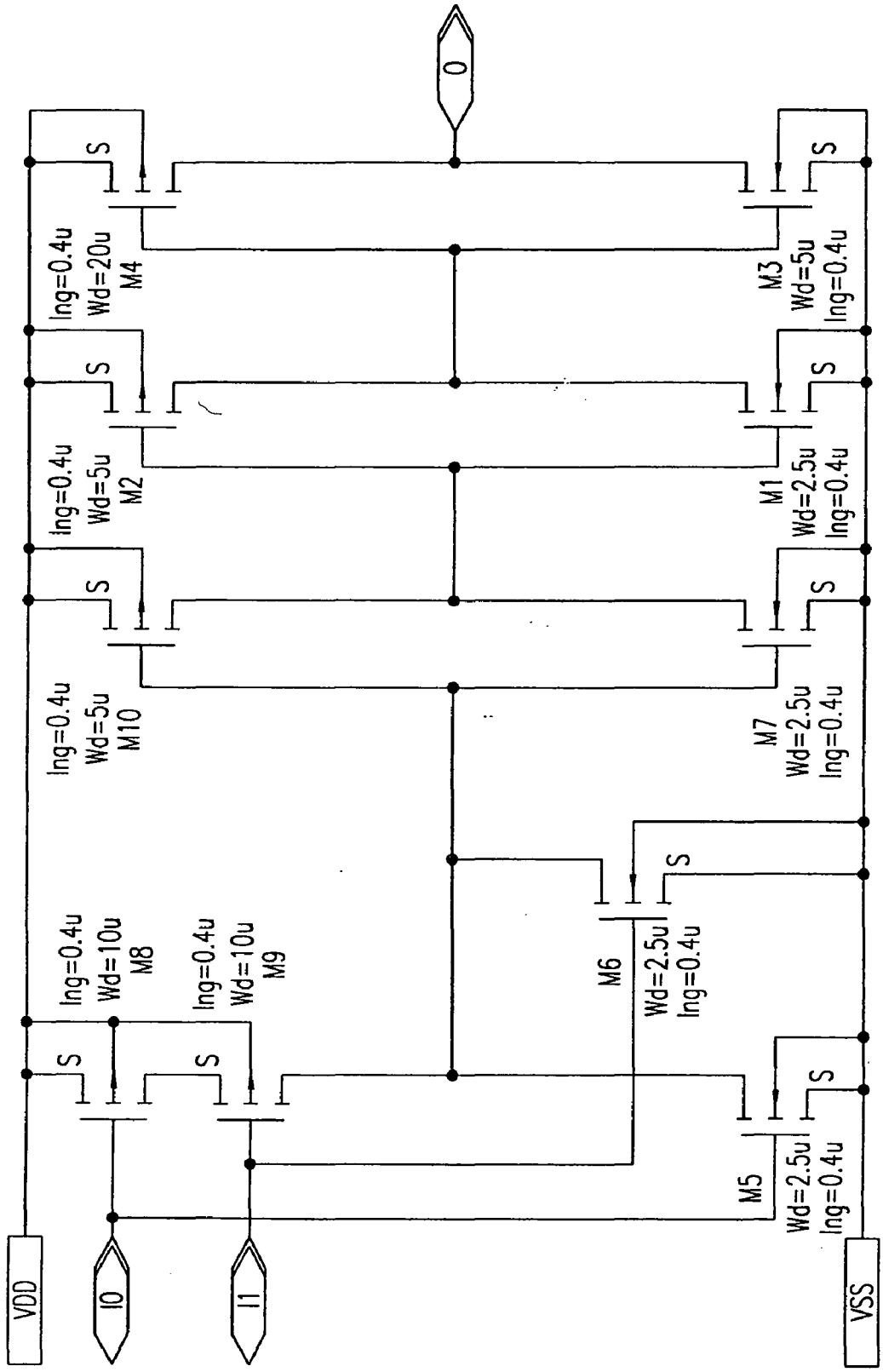
O
S
lng=0.4u
Wd=20u
M4
M3
Wd=5u
lng=0.4u
lng=0.4u
Wd=5u
M2
M1
Wd=2.5u
lng=0.4u
lng=0.4u
Wd=5u
M10
M7
Wd=2.5u
lng=0.4u
lng=0.4u
Wd=10u
M8
lng=0.4u
Wd=10u
M9
M6
Wd=2.5u
lng=0.4u
M5
Wd=2.5u
lng=0.4u
VDD
I0
I1
VSS

FIG.151

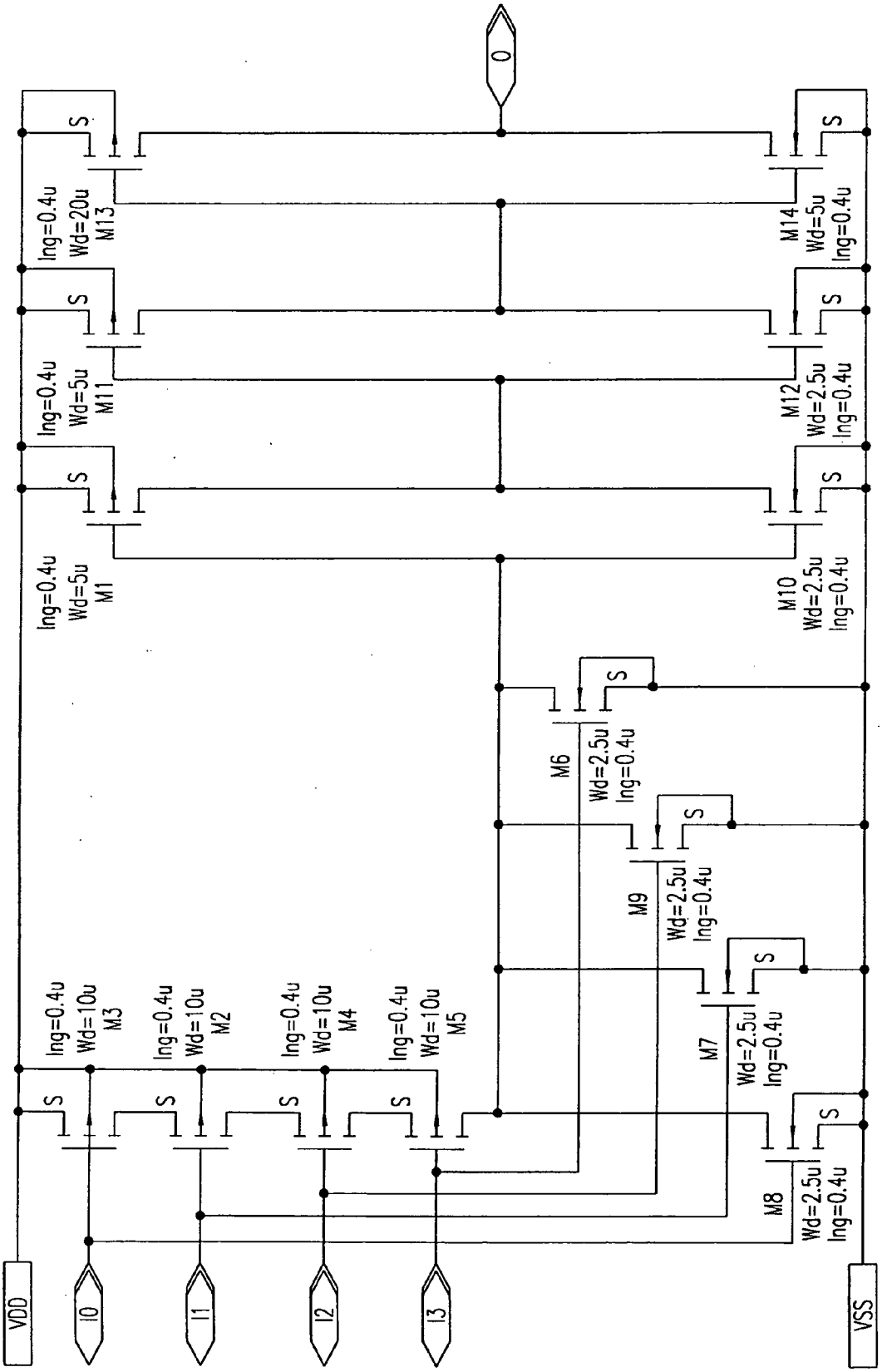
O
S
lng=0.4u
Wd=20u
M13
M14
Wd=5u
lng=0.4u
lng=0.4u
Wd=5u
M11
M12
Wd=2.5u
lng=0.4u
lng=0.4u
Wd=5u
M1
M10
Wd=2.5u
lng=0.4u
M6
Wd=2.5u
lng=0.4u
M9
Wd=2.5u
lng=0.4u
M7
Wd=2.5u
lng=0.4u
M8
Wd=2.5u
lng=0.4u
lng=0.4u
Wd=10u
M3
lng=0.4u
Wd=10u
M2
lng=0.4u
Wd=10u
M4
lng=0.4u
Wd=10u
M5
VDD
I0
I1
I2
I3
VSS

FIG.152

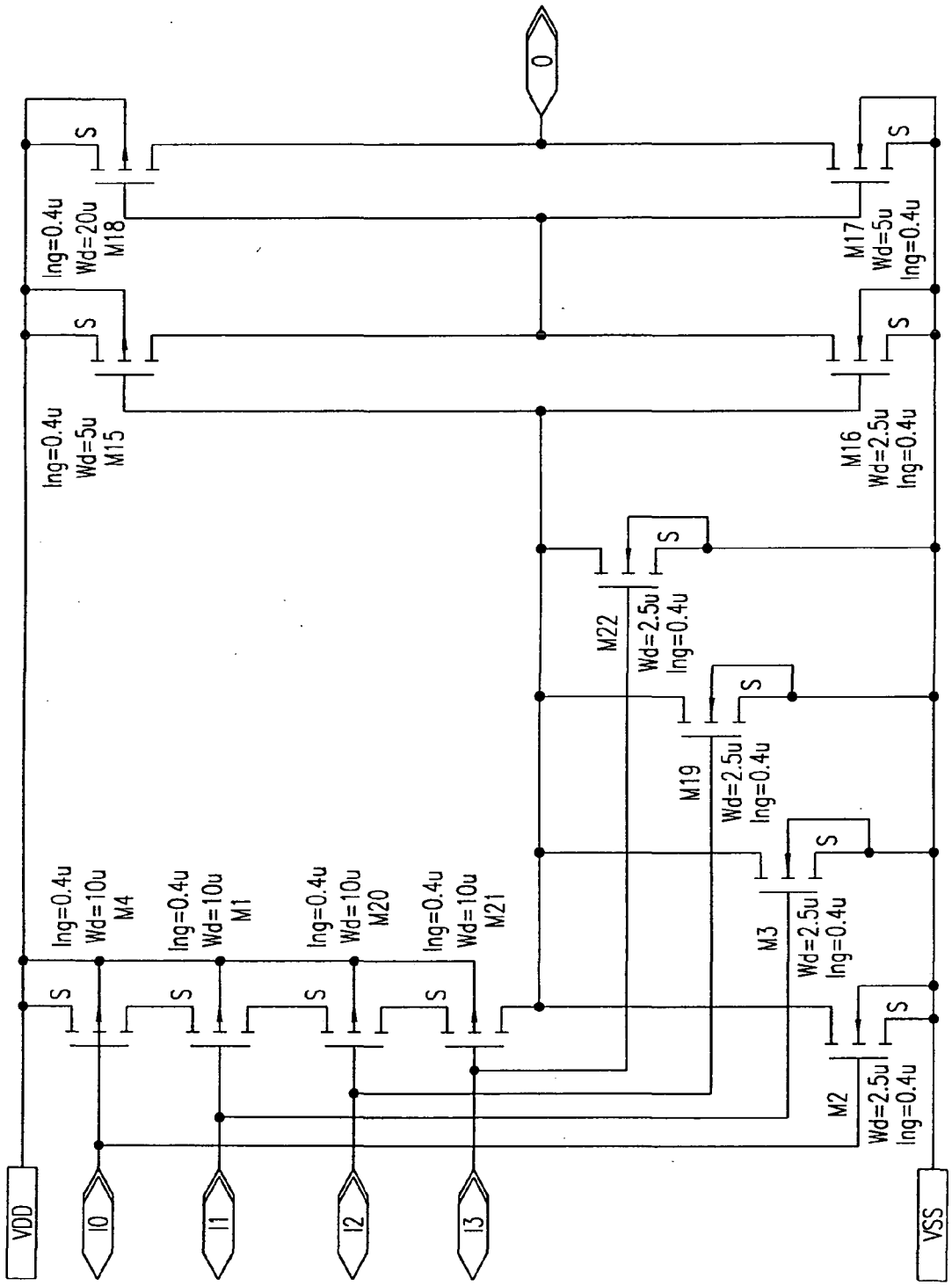
O
S
lng=0.4u
Wd=20u
M18
M17
Wd=5u
lng=0.4u
lng=0.4u
Wd=5u
M15
M16
Wd=2.5u
lng=0.4u
M22
Wd=2.5u
lng=0.4u
M19
Wd=2.5u
lng=0.4u
M3
Wd=2.5u
lng=0.4u
M2
Wd=2.5u
lng=0.4u
lng=0.4u
Wd=10u
M4
lng=0.4u
Wd=10u
M1
lng=0.4u
Wd=10u
M20
lng=0.4u
Wd=10u
M21
VDD
I0
I1
I2
I3
VSS

FIG.153

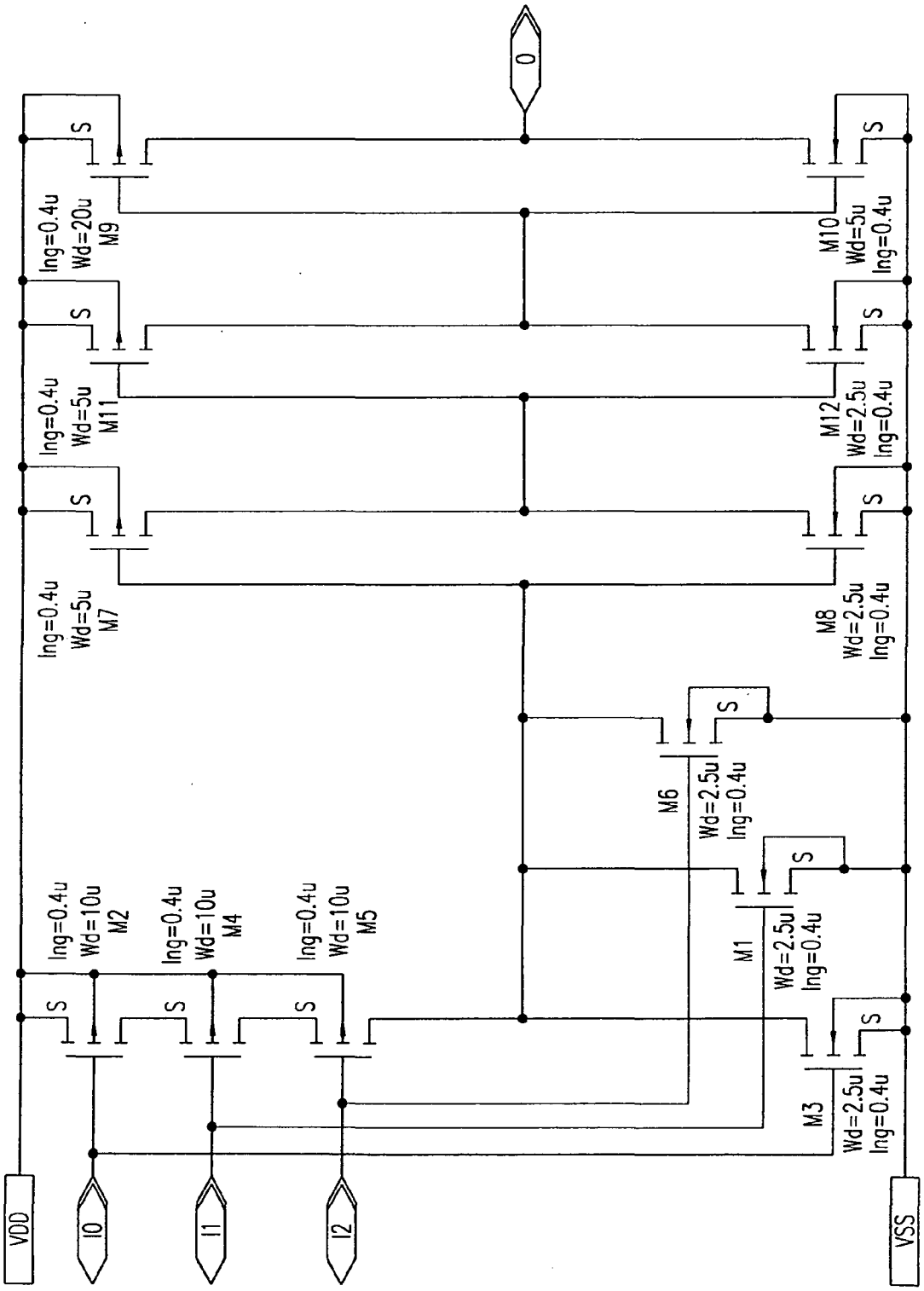
O
S
lng=0.4u
Wd=20u
M9
M10
Wd=5u
lng=0.4u
lng=0.4u
Wd=5u
M11
M12
Wd=2.5u
lng=0.4u
lng=0.4u
Wd=5u
M7
M8
Wd=2.5u
lng=0.4u
M6
Wd=2.5u
lng=0.4u
M1
Wd=2.5u
lng=0.4u
lng=0.4u
Wd=10u
M2
lng=0.4u
Wd=10u
M4
lng=0.4u
Wd=10u
M5
M3
Wd=2.5u
lng=0.4u
VDD
I0
I1
I2
VSS

FIG. 154

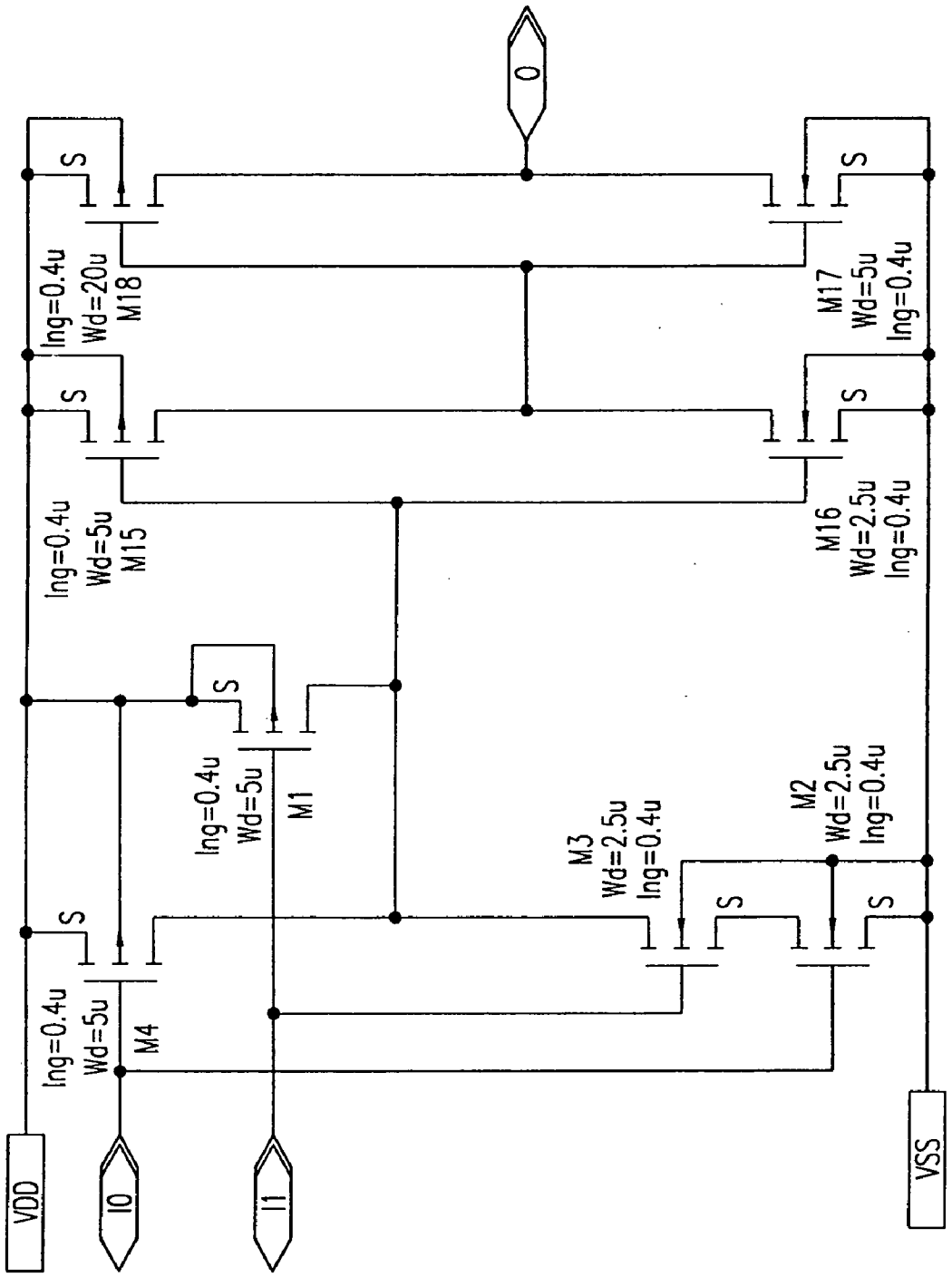
VDD
I0
I1
O
VSS
S
lng=0.4u
Wd=5u
M4
lng=0.4u
Wd=5u
M1
lng=0.4u
Wd=5u
M15
lng=0.4u
Wd=20u
M18
M3
Wd=2.5u
lng=0.4u
M2
Wd=2.5u
lng=0.4u
M16
Wd=2.5u
lng=0.4u
M17
Wd=5u
lng=0.4u

FIG.155

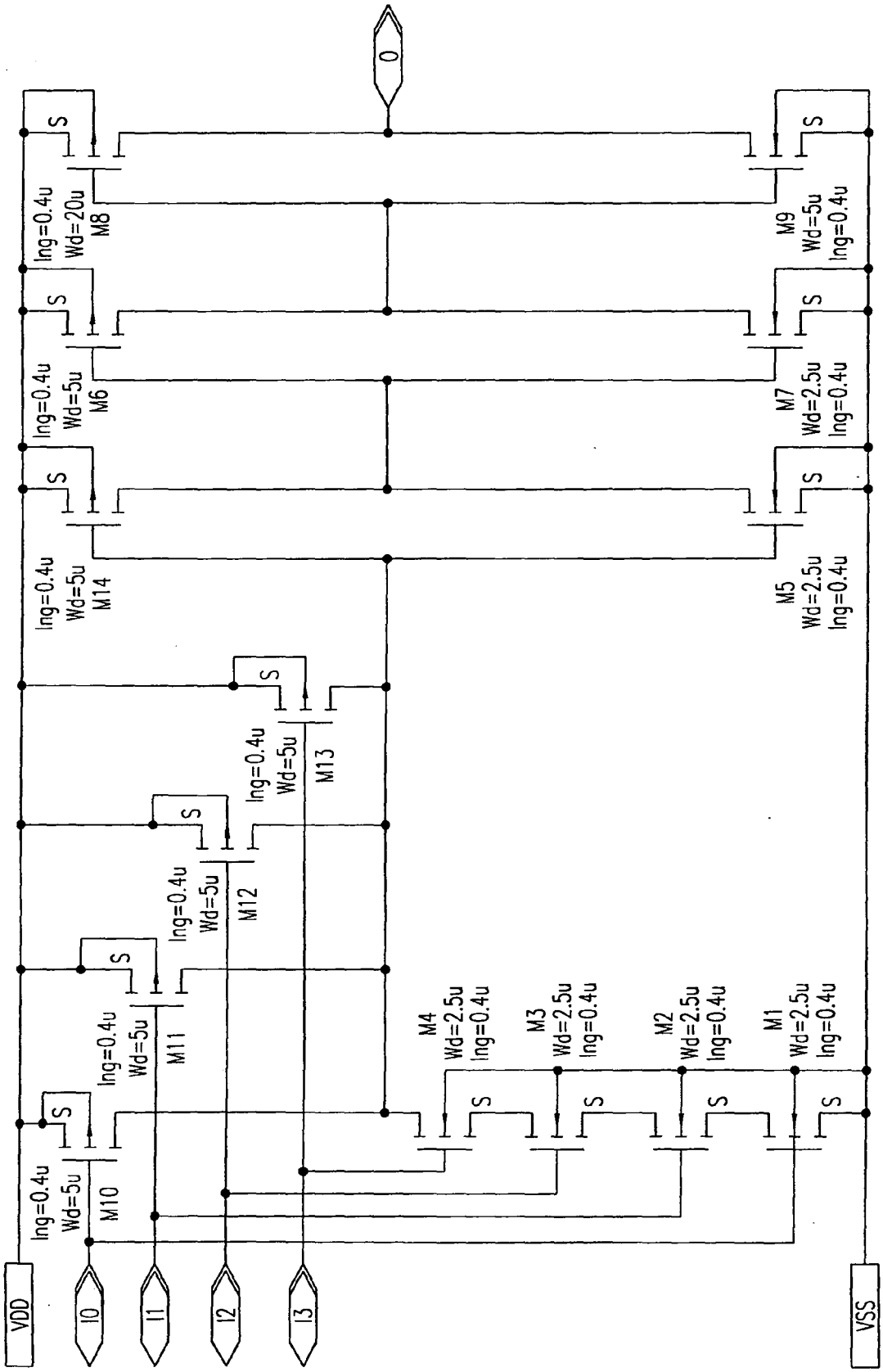
O
S
lng=0.4u
Wd=20u
M8
M9
Wd=5u
lng=0.4u
lng=0.4u
Wd=5u
M6
M7
Wd=2.5u
lng=0.4u
lng=0.4u
Wd=5u
M14
M5
Wd=2.5u
lng=0.4u
lng=0.4u
Wd=5u
M13
lng=0.4u
Wd=5u
M12
lng=0.4u
Wd=5u
M11
M4
Wd=2.5u
lng=0.4u
M3
Wd=2.5u
lng=0.4u
M2
Wd=2.5u
lng=0.4u
M1
Wd=2.5u
lng=0.4u
lng=0.4u
Wd=5u
M10
VDD
I0
I1
I2
I3
VSS

FIG. 156

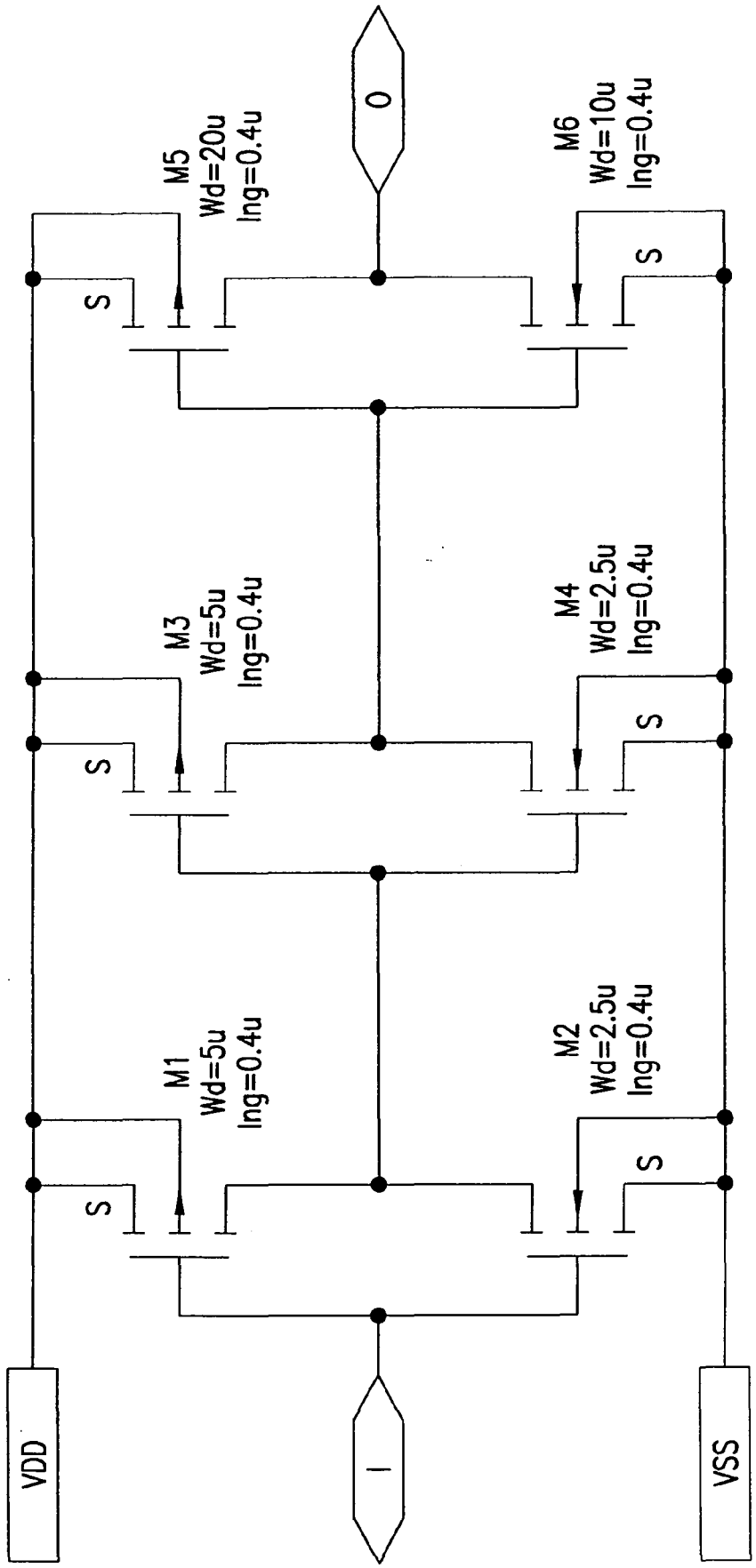
VDD
S
M1
Wd=5u
lng=0.4u
M3
Wd=5u
lng=0.4u
M5
Wd=20u
lng=0.4u
I
O
M2
Wd=2.5u
lng=0.4u
M4
Wd=2.5u
lng=0.4u
M6
Wd=10u
lng=0.4u
VSS

FIG. 157

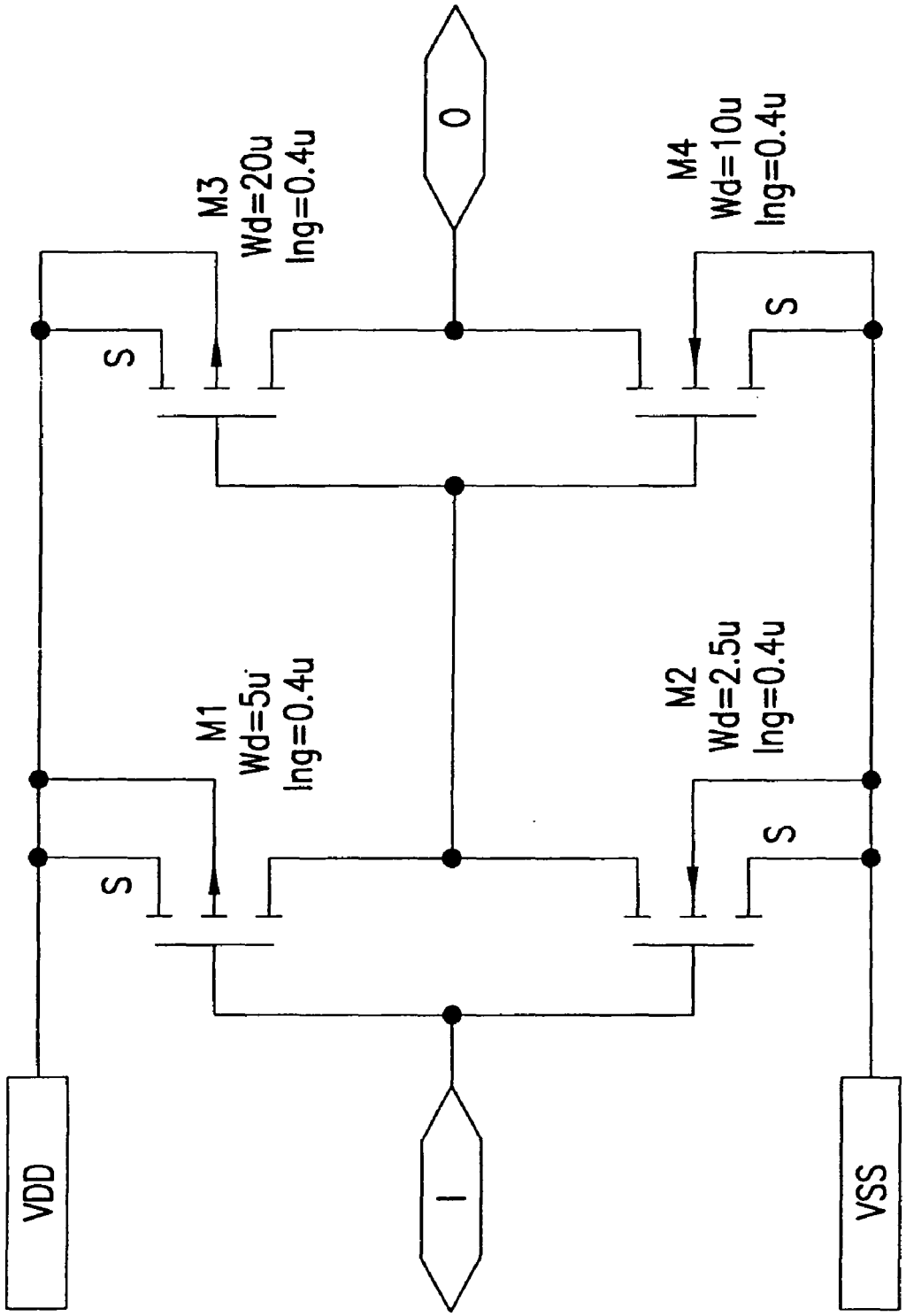
VDD
S
M1
Wd=5u
lng=0.4u
I
S
M2
Wd=2.5u
lng=0.4u
VSS
S
M3
Wd=20u
lng=0.4u
O
S
M4
Wd=10u
lng=0.4u

FIG.158

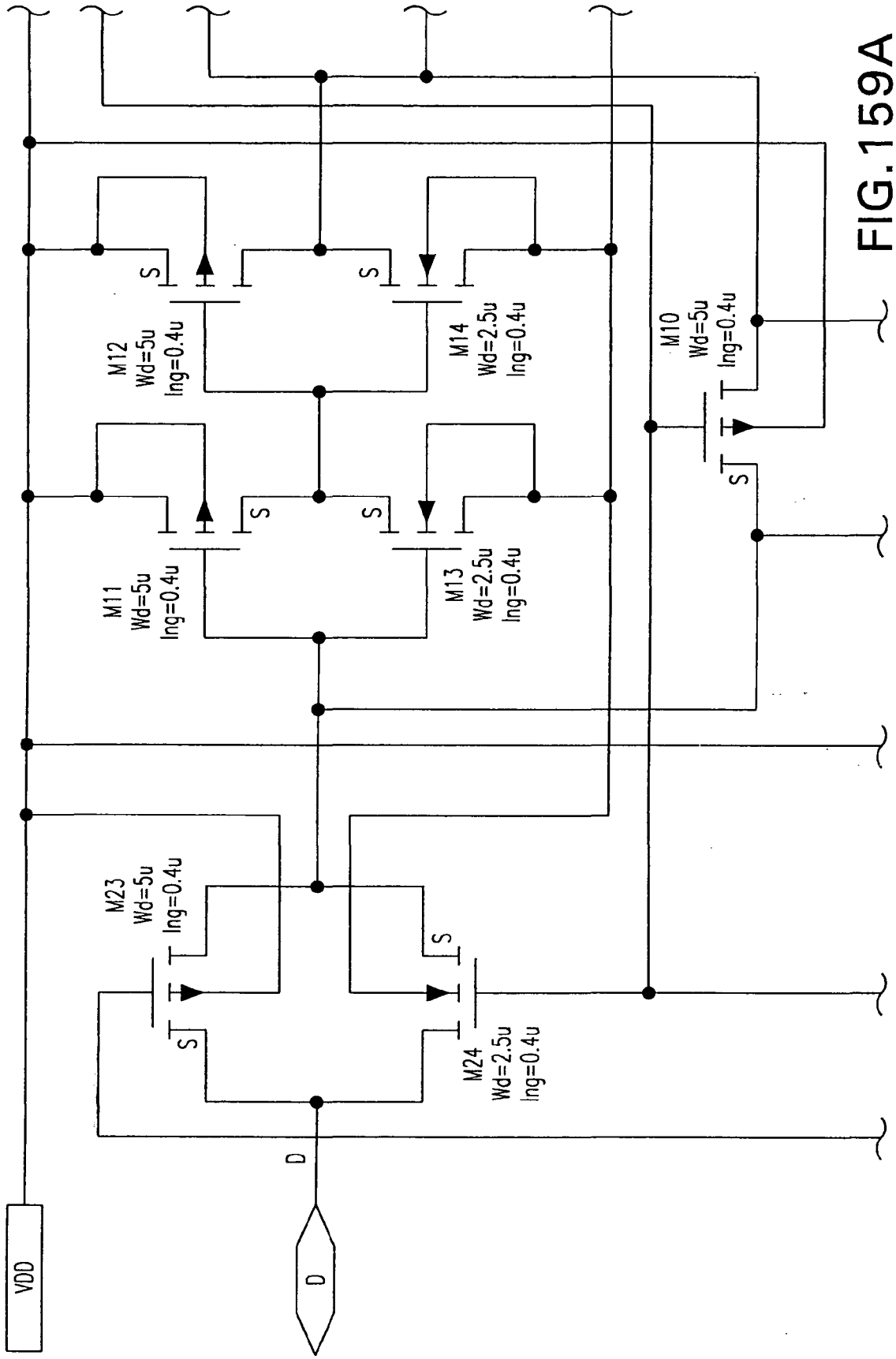
VDD
D
D
M23
Wd=5u
lng=0.4u
M24
Wd=2.5u
lng=0.4u
M11
Wd=5u
lng=0.4u
M12
Wd=5u
lng=0.4u
M13
Wd=2.5u
lng=0.4u
M14
Wd=2.5u
lng=0.4u
M10
Wd=5u
lng=0.4u
S

FIG.159A

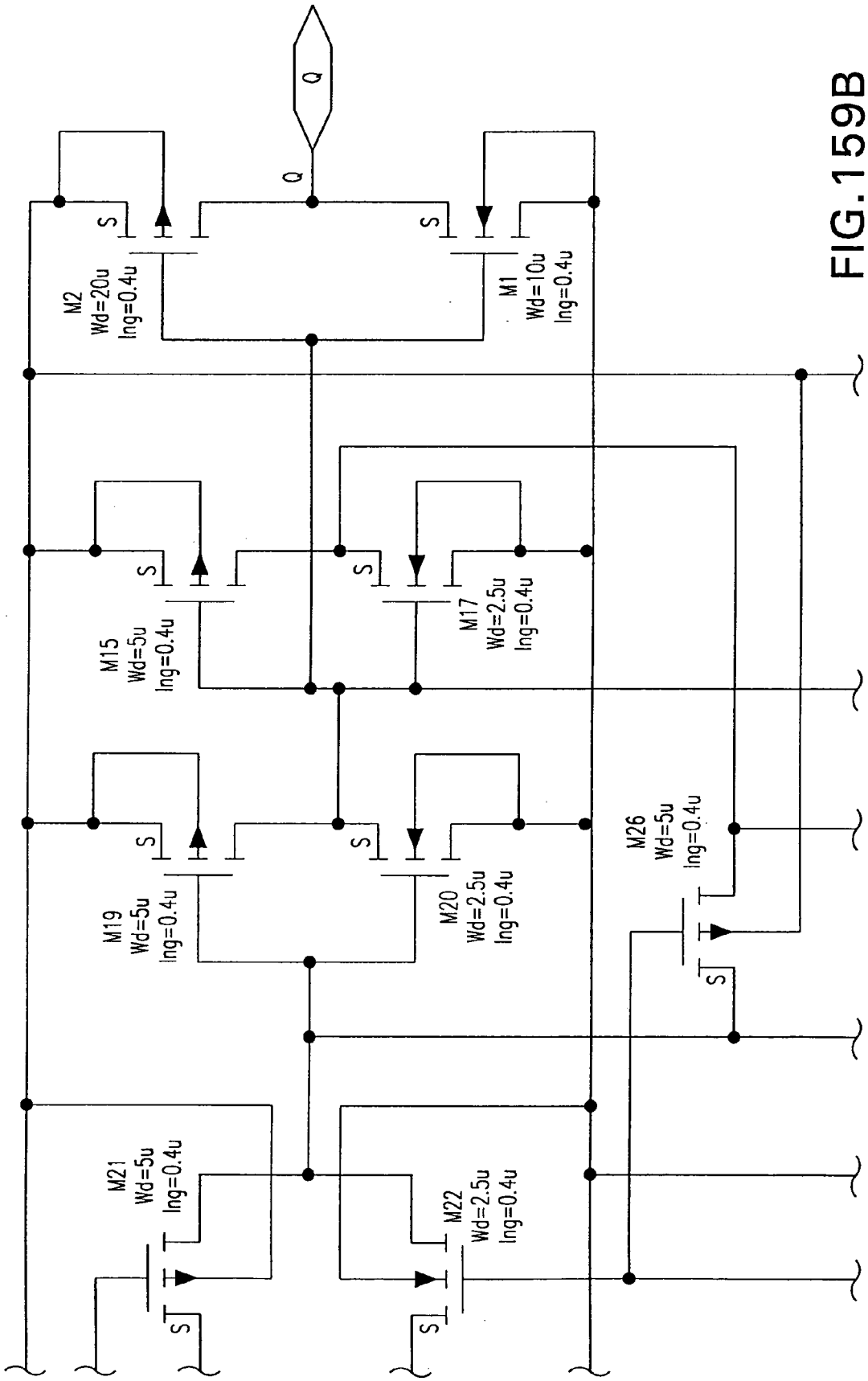
Q
Q
M2
Wd=20u
lng=0.4u
M1
Wd=10u
lng=0.4u
M15
Wd=5u
lng=0.4u
M17
Wd=2.5u
lng=0.4u
M19
Wd=5u
lng=0.4u
M20
Wd=2.5u
lng=0.4u
M26
Wd=5u
lng=0.4u
M21
Wd=5u
lng=0.4u
M22
Wd=2.5u
lng=0.4u
S

FIG.159B

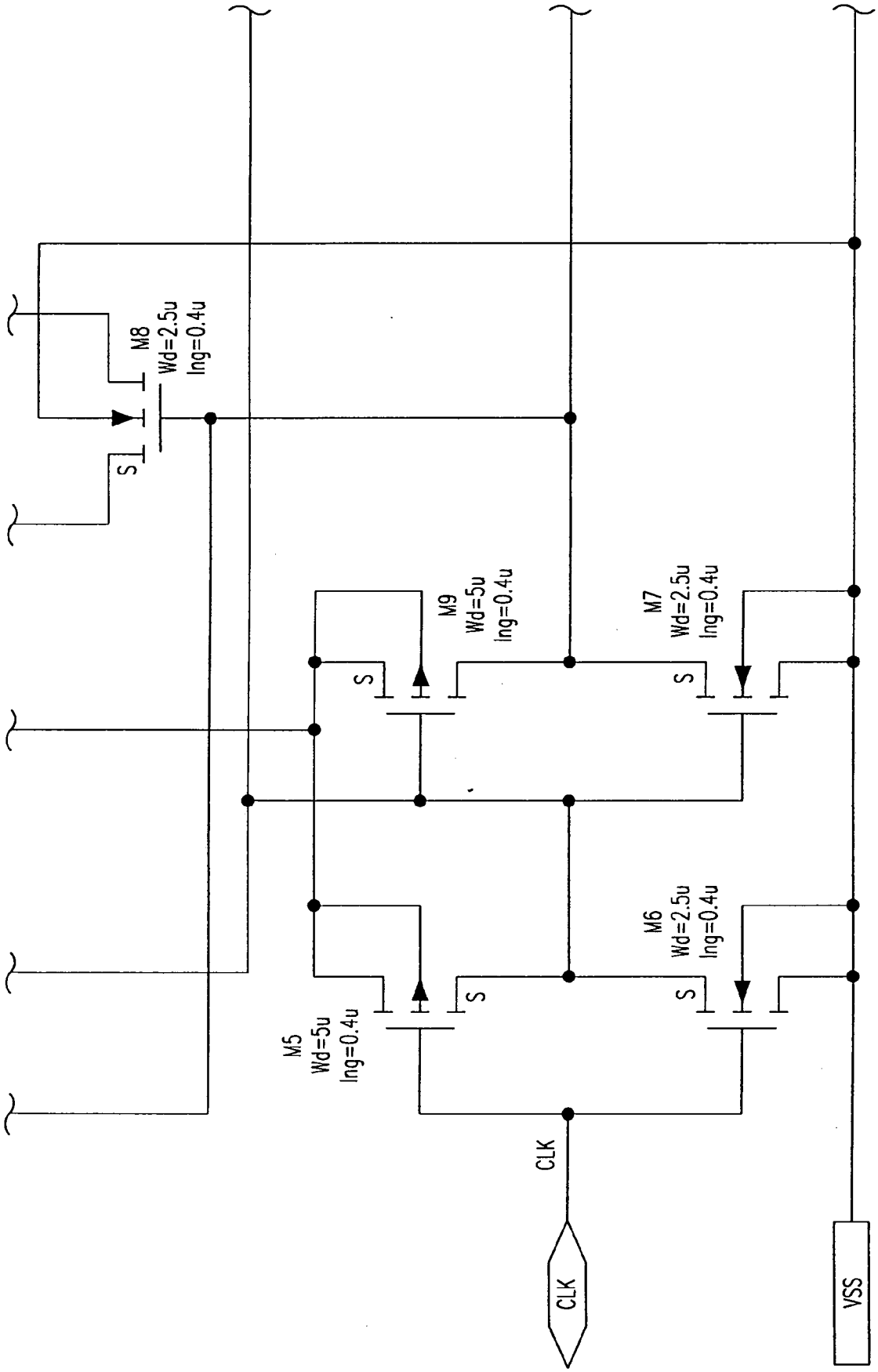
M8
Wd=2.5u
lng=0.4u
S
M9
Wd=5u
lng=0.4u
S
M7
Wd=2.5u
lng=0.4u
S
M6
Wd=2.5u
lng=0.4u
S
M5
Wd=5u
lng=0.4u
S
CLK
CLK
VSS

FIG. 159C

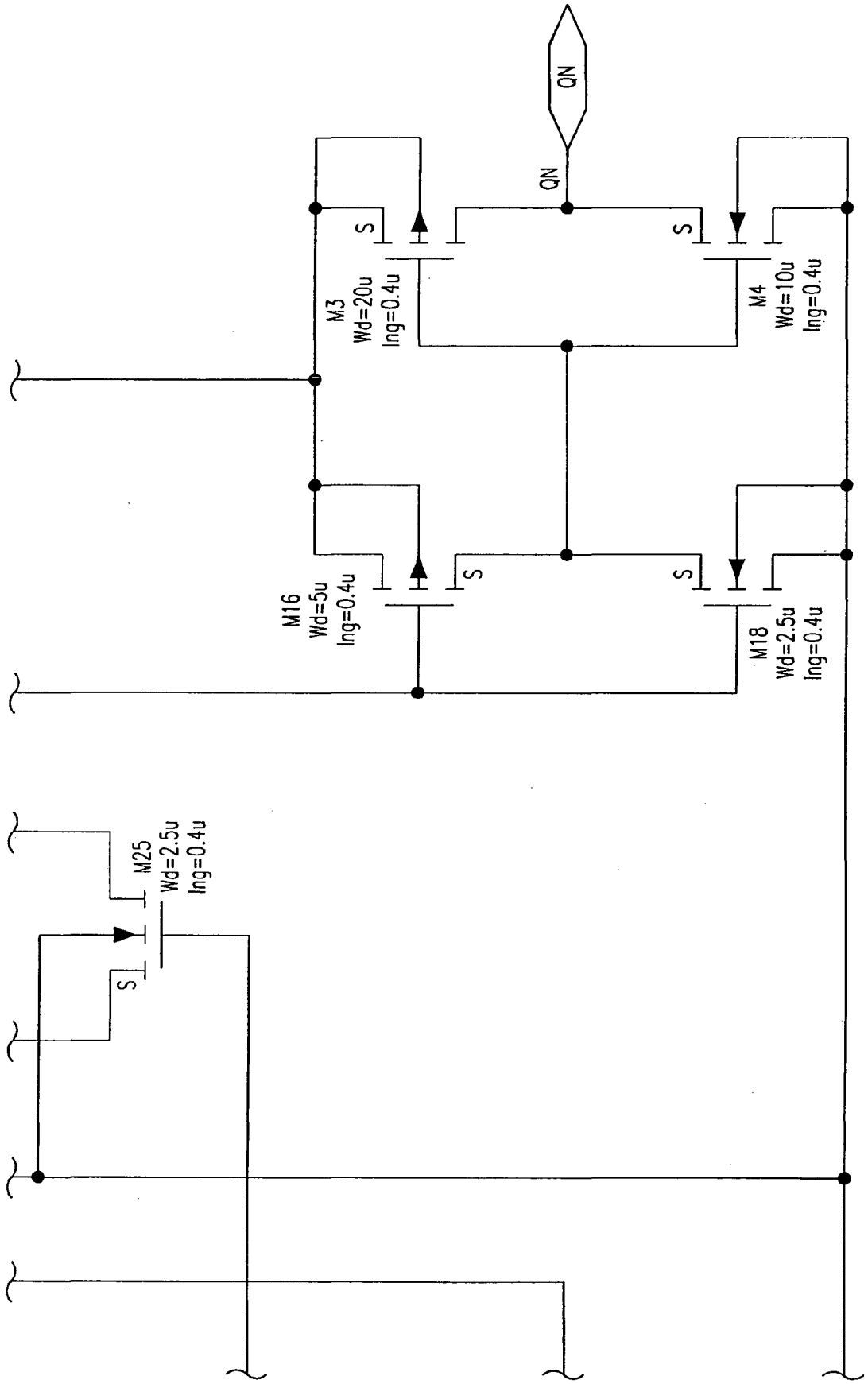
QN
QN
S
S
M3
Wd=20u
lng=0.4u
M4
Wd=10u
lng=0.4u
S
S
M16
Wd=5u
lng=0.4u
M18
Wd=2.5u
lng=0.4u
M25
Wd=2.5u
lng=0.4u
S

FIG.159D

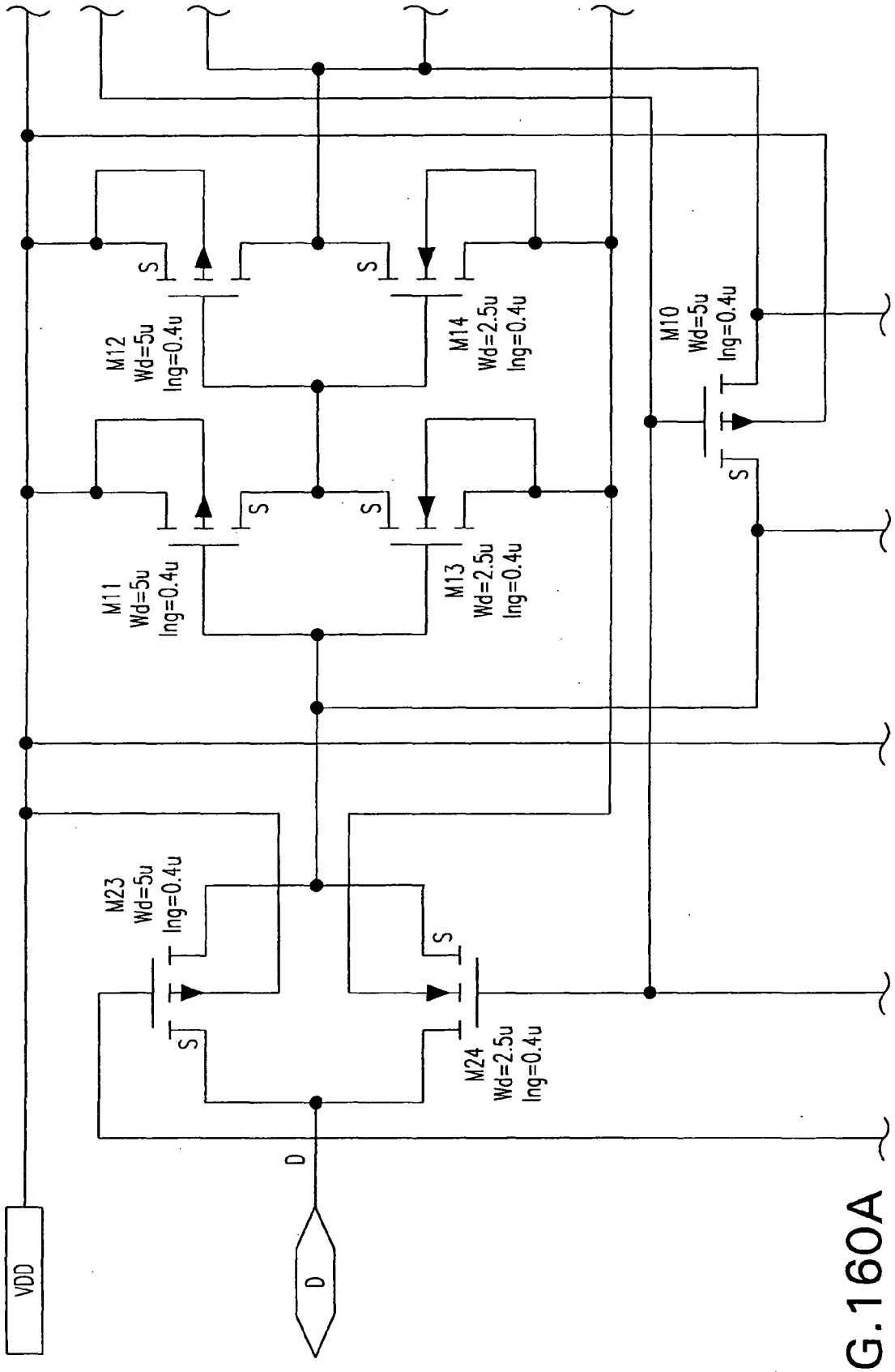
VDD
D
D
M23
Wd=5u
lng=0.4u
M24
Wd=2.5u
lng=0.4u
M11
Wd=5u
lng=0.4u
M12
Wd=5u
lng=0.4u
M13
Wd=2.5u
lng=0.4u
M14
Wd=2.5u
lng=0.4u
M10
Wd=5u
lng=0.4u
S

FIG.160A

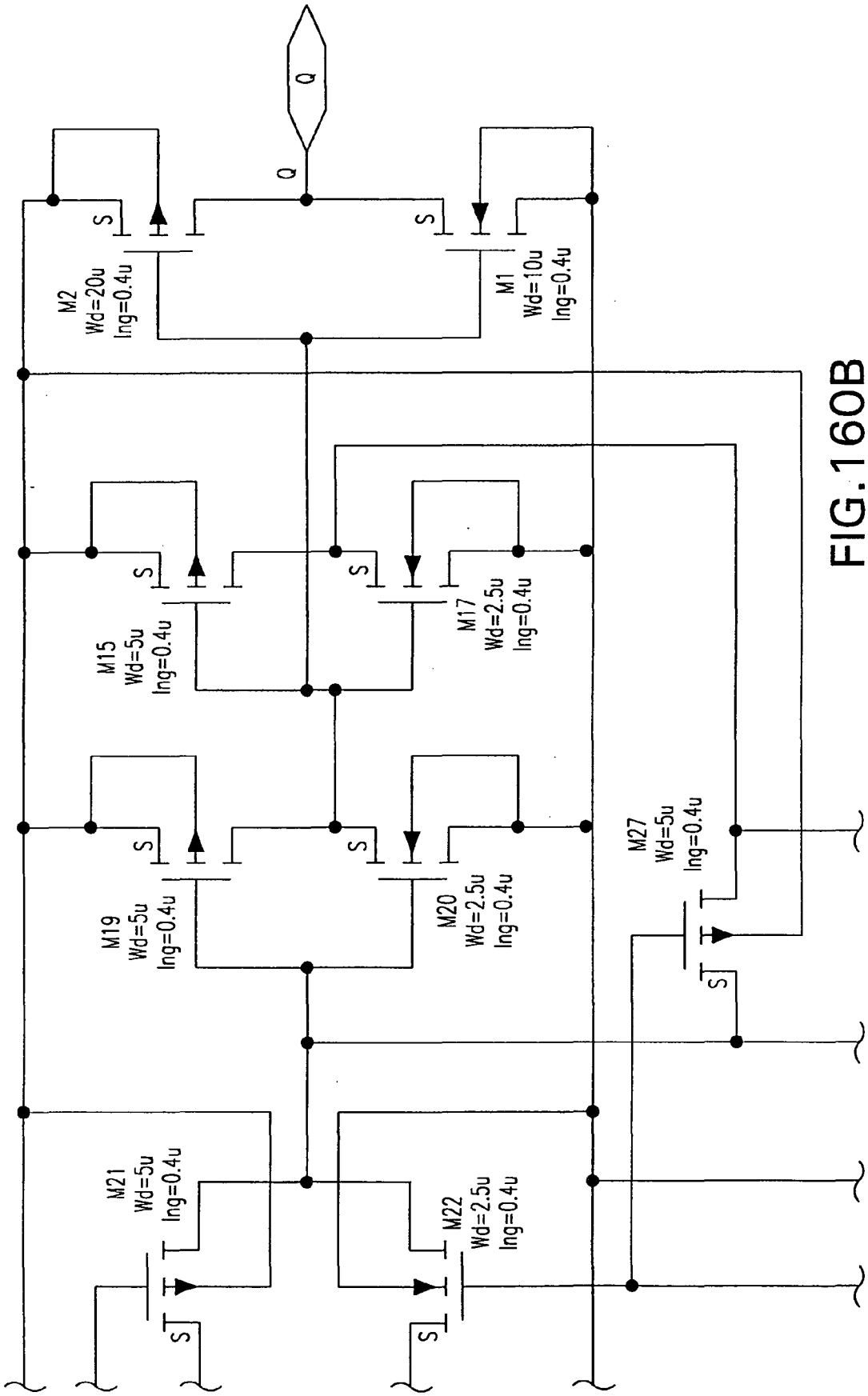
Q
Q
M2
Wd=20u
lng=0.4u
M1
Wd=10u
lng=0.4u
M15
Wd=5u
lng=0.4u
M17
Wd=2.5u
lng=0.4u
M19
Wd=5u
lng=0.4u
M20
Wd=2.5u
lng=0.4u
M27
Wd=5u
lng=0.4u
M21
Wd=5u
lng=0.4u
M22
Wd=2.5u
lng=0.4u
S

FIG. 160B

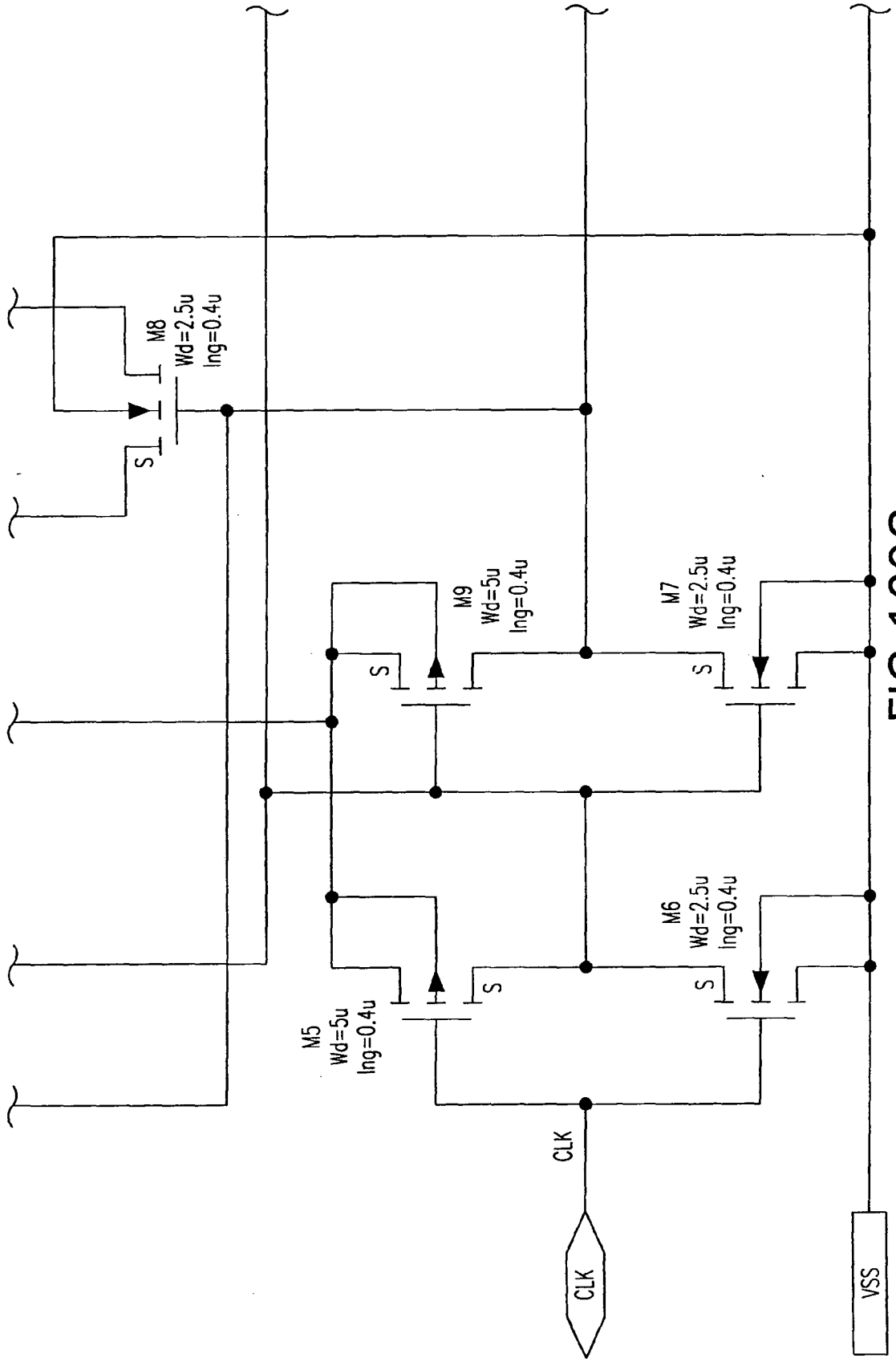
M8
Wd=2.5u
lng=0.4u
S
M9
Wd=5u
lng=0.4u
S
M7
Wd=2.5u
lng=0.4u
S
M6
Wd=2.5u
lng=0.4u
S
M5
Wd=5u
lng=0.4u
S
CLK
CLK
VSS

FIG. 160C

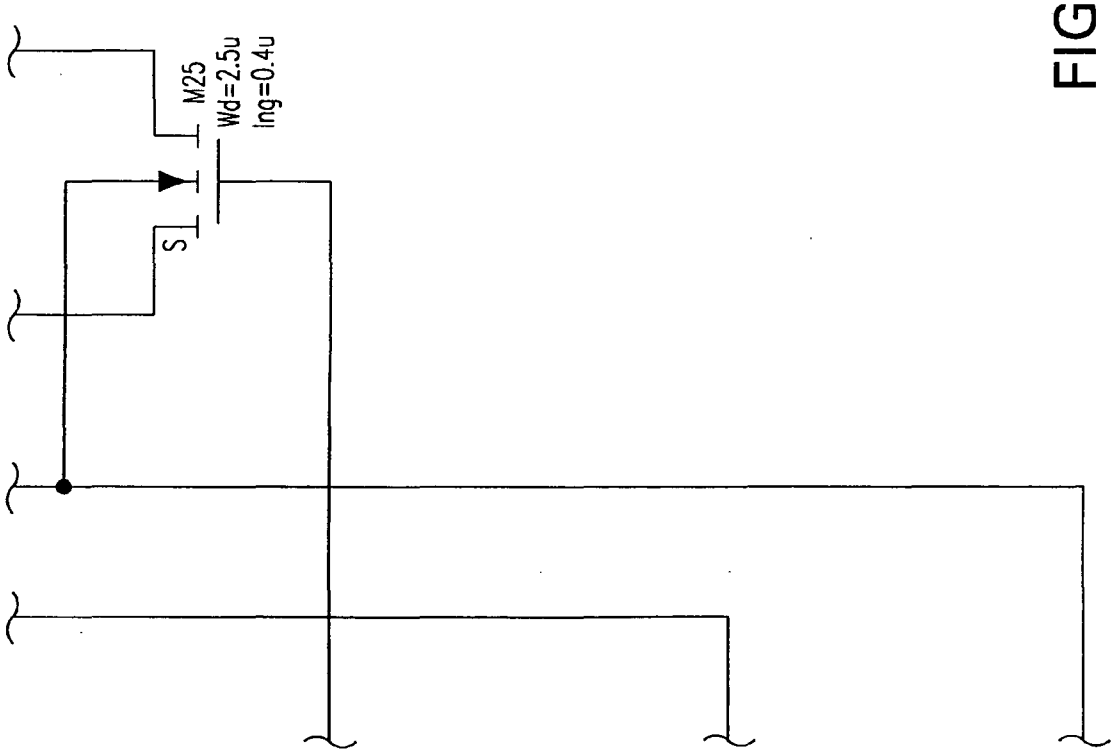

FIG.160D

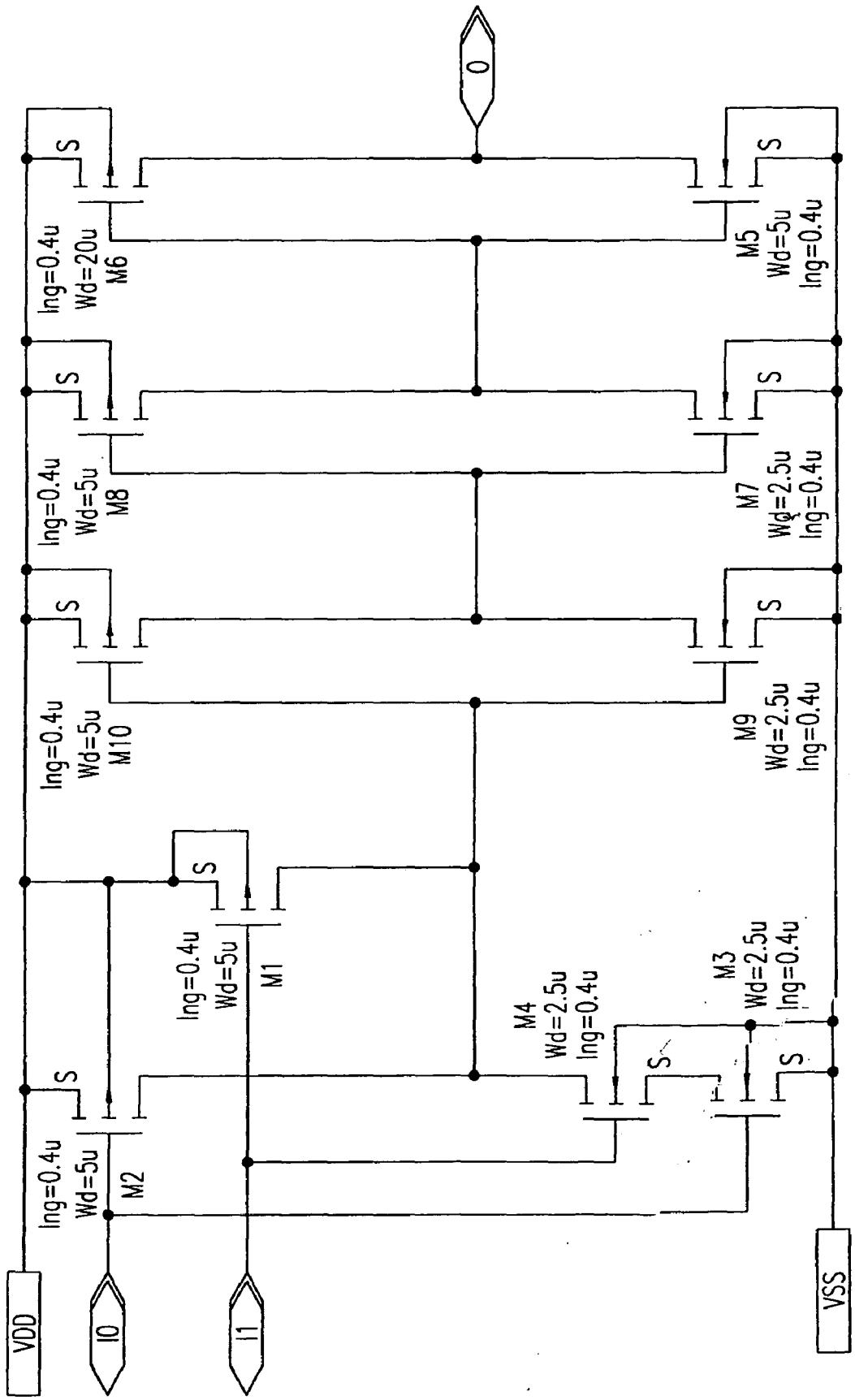
O
S
lng=0.4u
Wd=20u
M6
M5
Wd=5u
lng=0.4u
lng=0.4u
Wd=5u
M8
M7
Wd=2.5u
lng=0.4u
lng=0.4u
Wd=5u
M10
M9
Wd=2.5u
lng=0.4u
lng=0.4u
Wd=5u
M1
M4
Wd=2.5u
lng=0.4u
M3
Wd=2.5u
lng=0.4u
lng=0.4u
Wd=5u
M2
VDD
I0
I1
VSS

FIG. 161

WIRELESS LOCAL AREA NETWORK (WLAN) USING UNIVERSAL FREQUENCY TRANSLATION TECHNOLOGY INCLUDING MULTI-PHASE EMBODIMENTS AND CIRCUIT IMPLEMENTATIONS

[0001] This application claims the benefit of the following: U.S. Provisional Application No. 60/147,129, filed on Aug. 4, 1999; U.S. application Ser. No. 09/525,615, filed on Mar. 14, 2000; and U.S. application Ser. No. 09/526,041, filed on Mar. 14, 2000, all of which are incorporated herein by reference in their entireties.

CROSS-REFERENCE TO OTHER APPLICATIONS

[0002] The following applications of common assignee are related to the present application, and are herein incorporated by reference in their entireties:

[0003] "Method and System for Down-Converting Electromagnetic Signals," Ser. No. 09/176,022, filed Oct. 21, 1998, issued as U.S. Pat. No. 6,061,551 on May 9, 2000.

[0004] "Method and System for Down-Converting Electromagnetic Signals Having Optimized Switch Structures," Ser. No. 09/293,095, filed Apr. 16, 1999.

[0005] "Method and System for Down-Converting Electromagnetic Signals Including Resonant Structures for Enhanced Energy Transfer," Ser. No. 09/293,342, filed Apr. 16, 1999.

[0006] "Method and System for Frequency Up-Conversion," Ser. No. 09/176,154, filed Oct. 21, 1998, issued as U.S. Pat. No. 6,091,940 on Jul. 18, 2000.

[0007] "Method and System for Frequency Up-Conversion Having Optimized Switch Structures," Ser. No. 09/293,097, filed Apr. 16, 1999.

[0008] "Method and System for Ensuring Reception of a Communications Signal," Ser. No. 09/176,415, filed Oct. 21, 1998, issued as U.S. Pat. No. 6,061,555 on May 9, 2000.

[0009] "Integrated Frequency Translation And Selectivity," Ser. No. 09/175,966, filed Oct. 21, 1998, issued as U.S. Pat. No. 6,049,706 on Apr. 11, 2000.

[0010] "Integrated Frequency Translation and Selectivity with a Variety of Filter Embodiments," Ser. No. 09/293,283, filed Apr. 16, 1999.

[0011] "Applications of Universal Frequency Translation," Ser. No. 09/261,129, filed Mar. 3, 1999.

[0012] "Method and System for Down-Converting an Electromagnetic Signal, Transforms For Same, and Aperture Relationships", Ser. No. 09/550,644, filed on Apr. 14, 2000.

[0013] "Wireless Local Area Network (WLAN) Technology and Applications Including Techniques of Universal Frequency Translation", Attorney Docket No. 1744.0630002, filed on Aug. 4, 2000.

BACKGROUND OF THE INVENTION

[0014] 1. Field of the Invention

[0015] The present invention is generally related to wireless local area networks (WLANs), and more particularly, to WLANs that utilize universal frequency translation technology for frequency translation, and applications of same.

[0016] 2. Related Art

[0017] Wireless LANs exist for receiving and transmitting information to/from mobile terminals using electromagnetic (EM) signals. Conventional wireless communications circuitry is complex and has a large number of circuit parts. This complexity and high parts count increases overall cost. Additionally, higher part counts result in higher power consumption, which is undesirable, particularly in battery powered wireless units. Additionally, various communication components exist for performing frequency down-conversion, frequency up-conversion, and filtering. Also, schemes exist for signal reception in the face of potential jamming signals.

SUMMARY OF THE INVENTION

[0018] The present invention is directed to a wireless local area network (WLAN) that includes one or more WLAN devices (also called stations, terminals, access points, client devices, or infrastructure devices) for effecting wireless communications over the WLAN. The WLAN device includes at least an antenna, a receiver, and a transmitter for effecting wireless communications over the WLAN. Additionally, the WLAN device may also include a LNA/PA module, a control signal generator, a demodulation/modulation facilitation module, and a media access control (MAC) interface. The WLAN receiver includes at least one universal frequency translation module that frequency down-converts a received electromagnetic (EM) signal. In embodiments, the UFT based receiver is configured in a multi-phase embodiment to reduce or eliminate re-radiation that is caused by DC offset. The WLAN transmitter includes at least one universal frequency translation module that frequency up-converts a baseband signal in preparation for transmission over the WLAN. In embodiments, the UFT based transmitter is configured in a differential and/or multi-phase embodiment to reduce carrier insertion and spectral growth in the transmitted signal.

[0019] WLANs exhibit multiple advantages by using UFT modules for frequency translation. These advantages include, but are not limited to: lower power consumption, longer battery life, fewer parts, lower cost, less tuning, and more effective signal transmission and reception. These advantages are possible because the UFT module enables direct frequency conversion in an efficient manner with minimal signal distortion. The structure and operation of embodiments of the UFT module, and various applications of the same are described in detail in the following sections.

[0020] Further features and advantages of the invention, as well as the structure and operation of various embodiments of the invention, are described in detail below with reference to the accompanying drawings. The drawing in which an element first appears is typically indicated by the leftmost character(s) and/or digit(s) in the corresponding reference number.

BRIEF DESCRIPTION OF THE FIGURES

[0021] The present invention will be described with reference to the accompanying drawings, wherein:

[0022] **FIG. 1A** is a block diagram of a universal frequency translation (UFT) module according to an embodiment of the invention;

[0023] **FIG. 1B** is a more detailed diagram of a universal frequency translation (UFT) module according to an embodiment of the invention;

[0024] **FIG. 1C** illustrates a UFT module used in a universal frequency down-conversion (UFD) module according to an embodiment of the invention;

[0025] **FIG. 1D** illustrates a UFT module used in a universal frequency up-conversion (UFU) module according to an embodiment of the invention;

[0026] **FIG. 2A-2B** illustrate block diagrams of universal frequency translation (UFT) modules according to an embodiment of the invention;

[0027] **FIG. 3** is a block diagram of a universal frequency up-conversion (UFU) module according to an embodiment of the invention;

[0028] **FIG. 4** is a more detailed diagram of a universal frequency up-conversion (UFU) module according to an embodiment of the invention;

[0029] **FIG. 5** is a block diagram of a universal frequency up-conversion (UFU) module according to an alternative embodiment of the invention;

[0030] **FIG. 6A-6I** illustrate example waveforms used to describe the operation of the UFU module;

[0031] **FIG. 7** illustrates a UFT module used in a receiver according to an embodiment of the invention;

[0032] **FIG. 8** illustrates a UFT module used in a transmitter according to an embodiment of the invention;

[0033] **FIG. 9** illustrates an environment comprising a transmitter and a receiver, each of which may be implemented using a UFT module of the invention;

[0034] **FIG. 10** illustrates a transceiver according to an embodiment of the invention;

[0035] **FIG. 11** illustrates a transceiver according to an alternative embodiment of the invention;

[0036] **FIG. 12** illustrates an environment comprising a transmitter and a receiver, each of which may be implemented using enhanced signal reception (ESR) components of the invention;

[0037] **FIG. 13** illustrates a UFT module used in a unified down-conversion and filtering (UDF) module according to an embodiment of the invention;

[0038] **FIG. 14** illustrates an example receiver implemented using a UDF module according to an embodiment of the invention;

[0039] **FIGS. 15A-15F** illustrate example applications of the UDF module according to embodiments of the invention;

[0040] **FIG. 16** illustrates an environment comprising a transmitter and a receiver, each of which may be implemented using enhanced signal reception (ESR) components of the invention, wherein the receiver may be further implemented using one or more UFD modules of the invention;

[0041] **FIG. 17** illustrates a unified down-converting and filtering (UDF) module according to an embodiment of the invention;

[0042] **FIG. 18** is a table of example values at nodes in the UDF module of **FIG. 19**;

[0043] **FIG. 19** is a detailed diagram of an example UDF module according to an embodiment of the invention;

[0044] **FIG. 20A** and **20A-1** are example aliasing modules according to embodiments of the invention;

[0045] **FIGS. 20B-20F** are example waveforms used to describe the operation of the aliasing modules of FIGS. **20A** and **20A-1**;

[0046] **FIG. 21** illustrates an enhanced signal reception system according to an embodiment of the invention;

[0047] **FIGS. 22A-22F** are example waveforms used to describe the system of **FIG. 21**;

[0048] **FIG. 23A** illustrates an example transmitter in an enhanced signal reception system according to an embodiment of the invention;

[0049] **FIGS. 23B and 23C** are example waveforms used to further describe the enhanced signal reception system according to an embodiment of the invention;

[0050] **FIG. 23D** illustrates another example transmitter in an enhanced signal reception system according to an embodiment of the invention;

[0051] **FIGS. 23E and 23F** are example waveforms used to further describe the enhanced signal reception system according to an embodiment of the invention;

[0052] **FIG. 24A** illustrates an example receiver in an enhanced signal reception system according to an embodiment of the invention;

[0053] **FIGS. 24B-24J** are example waveforms used to further describe the enhanced signal reception system according to an embodiment of the invention;

[0054] **FIG. 25** illustrates a block diagram of an example computer network;

[0055] **FIG. 26** illustrates a block diagram of an example computer network;

[0056] **FIG. 27** illustrates a block diagram of an example wireless interface;

[0057] **FIG. 28** illustrates an example heterodyne implementation of the wireless interface illustrated in **FIG. 27**;

[0058] **FIG. 29** illustrates an example in-phase/quadrature-phase (I/Q) heterodyne implementation of the interface illustrated in **FIG. 27**;

[0059] **FIG. 30** illustrates an example high level block diagram of the interface illustrated in **FIG. 27**, in accordance with the present invention;

[0060] **FIG. 31** illustrates a example block diagram of the interface illustrated in **FIG. 29**, in accordance with the invention;

[0061] **FIG. 32** illustrates an example I/Q implementation of the interface illustrated in **FIG. 31**;

[0062] **FIGS. 33-38** illustrate example environments encompassed by the invention;

[0063] **FIG. 39** illustrates a block diagram of a WLAN interface according to an embodiment of the invention;

[0064] **FIG. 40** illustrates a WLAN receiver according to an embodiment of the invention;

[0065] **FIG. 41** illustrates a WLAN transmitter according to an embodiment of the invention;

[0066] **FIGS. 42-44** are example implementations of a WLAN interface;

[0067] **FIGS. 45, 46A**, and **46**B relate to an example MAC interface for an example WLAN interface embodiment;

[0068] **FIGS. 47, 48**, **49**A, and **49**B relate to an example demodulator/modulator facilitation module for an example WLAN interface embodiment;

[0069] **FIGS. 50, 51**, **52**A, **52**B, and **52**C relate to an example alternate demodulator/modulator facilitation module for an example WLAN interface embodiment;

[0070] **FIGS. 53 and 54** relate to an example receiver for an example WLAN interface embodiment;

[0071] **FIGS. 55, 56A**, and **56**B relate to an example synthesizer for an example WLAN interface embodiment;

[0072] **FIGS. 57, 58**, **59**, **60**, **61**A, and **61**B relate to an example transmitter for an example WLAN interface embodiment;

[0073] **FIGS. 62 and 63** relate to an example motherboard for an example WLAN interface embodiment;

[0074] **FIGS. 64-66** relate to example LNAs for an example WLAN interface embodiment;

[0075] FIGS. **67**A-B illustrate IQ receivers having UFT modules in a series and shunt configurations, according to embodiments of the invention;

[0076] FIGS. **68**A-B illustrate IQ receivers having UFT modules with delayed control signals for quadrature implementation, according to embodiments of the present invention;

[0077] FIGS. **69**A-B illustrate IQ receivers having FET implementations, according to embodiments of the invention;

[0078] **FIG. 70A** illustrates an IQ receiver having shunt UFT modules according to embodiments of the invention;

[0079] **FIG. 70B** illustrates control signal generator embodiments for receiver **7000** according to embodiments of the invention;

[0080] FIGS. **70**C-D illustrate various control signal waveforms according to embodiments of the invention;

[0081] **FIG. 70E** illustrates an example IQ modulation receiver embodiment according to embodiments of the invention;

[0082] FIGS. **70**F-P illustrate example waveforms that are representative of the IQ receiver in **FIG. 70E**;

[0083] FIGS. **70**Q-R illustrate single channel receiver embodiments according to embodiments of the invention;

[0084] **FIG. 70S** illustrates a FET configuration of an IQ receiver embodiment according to embodiments of the invention;

[0085] **FIG. 71A** illustrate a balanced transmitter **7102**, according to an embodiment of the present invention;

[0086] FIGS. **71**B-C illustrate example waveforms that are associated with the balanced transmitter **7102**, according to an embodiment of the present invention;

[0087] **FIG. 71D** illustrates example FET configurations of the balanced transmitter **7102**, according to embodiments of the present invention;

[0088] FIGS. **72**A-I illustrate various example timing diagrams that are associated with the transmitter **7102**, according to embodiments of the present invention;

[0089] **FIG. 72J** illustrates an example frequency spectrum that is associated with a modulator **7104**, according to embodiments of the present invention;

[0090] **FIG. 73A** illustrate a transmitter **7302** that is configured for carrier insertion, according to embodiments of the present invention;

[0091] **FIG. 73B** illustrates example signals associated with the transmitter **7302**, according to embodiments of the invention;

[0092] **FIG. 74** illustrates an IQ balanced transmitter **7420**, according to embodiments of the present invention;

[0093] FIGS. **75**A-C illustrate various example signal diagrams associated with the balanced transmitter **7420** in **FIG. 74**;

[0094] **FIG. 76A** illustrates an IQ balanced transmitter **7608** according to embodiments of the invention;

[0095] **FIG. 76B** illustrates an IQ balanced modulator **7618** according to embodiments of the invention;

[0096] **FIG. 77** illustrates an IQ balanced modulator **7702** configured for carrier insertion according to embodiments of the invention;

[0097] **FIG. 78** illustrates an IQ balanced modulator **7802** configured for carrier insertion according to embodiments of the invention;

[0098] **FIG. 79A** illustrate a transmitter **7900**, according to embodiments of the present invention;

[0099] FIGS. **79**B-C illustrate various frequency spectrums that are associated with the transmitter **7900**;

[0100] **FIG. 79D** illustrates a FET configuration for the transmitter **7900**, according to embodiments of the present invention;

[0101] **FIG. 80** illustrates an IQ transmitter **8000**, according to embodiments of the present invention;

[0102] FIGS. **81**A-C illustrate various frequency spectrums that are associated with the IQ transmitter **8000**, according to embodiments of the present invention;

[0103] **FIG. 82** illustrates an IQ transmitter **8200**, according to embodiments of the present invention;

[0104] **FIG. 83** illustrates an IQ transmitter **8300**, according to embodiments of the invention;

[0105] **FIG. 84** illustrates a flowchart **8400** that is associated with the transmitter **7102** in the **FIG. 71A**, according to embodiments of the invention;

[0106] **FIG. 85** illustrates a flowchart **8500** that further defines the flowchart **8400** in the **FIG. 84**, and is associated with the transmitter **7102** according to embodiments of the invention;

[0107] **FIG. 86** illustrates a flowchart **8600** that is associated with the transmitter **7900** and further defines the flowchart **8400** in the **FIG. 84**, according to embodiments of the invention;

[0108] **FIG. 87** illustrates a flowchart **8700**, that is associated with the transmitter **7420** in the **FIG. 74**, according to embodiments of the invention;

[0109] **FIG. 88** illustrates a flowchart **8800** that is associated with the transmitter **8000**, according to embodiments of the invention;

[0110] **FIG. 89A** illustrate a pulse generator according to embodiments of the invention;

[0111] FIGS. **89**B-C illustrate various example signal diagrams associated with the pulse generator in **FIG. 89A**, according to embodiments of the invention;

[0112] **FIG. 89D**-E illustrate various example pulse generators according to embodiments of the present invention;

[0113] FIGS. **90**A-D illustrates various implementation circuits for the modulator **7410**, according to embodiments of the present invention;

[0114] **FIG. 91** illustrates an IQ transceiver **9100** according to embodiments of the present invention;

[0115] **FIG. 92** illustrates direct sequence spread spectrum according to embodiments of the present invention;

[0116] **FIG. 93** illustrates the LNA/PA module **3904** according to embodiments of the present invention;

[0117] **FIG. 94** illustrates a WLAN device **9400**, according to embodiments of the invention of the present invention; and

[0118] FIGS. **95**A-C, and **FIGS. 96-161** illustrate schematics for an integrated circuit implementation example of the present invention.

DETAILED DESCRIPTION OF THE PREFERRED EMBODIMENTS

[0119] Table of Contents

[0120] 1. Universal Frequency Translation

[0121] 2. Frequency Down-Conversion

[0122] 3. Frequency Up-Conversion

[0123] 4. Enhanced Signal Reception

[0124] 5. Unified Down-Conversion and Filtering

[0125] 6. Example Application Embodiments of the Invention

[0126] 6.1 Data Communication

[0127] 6.1.1 Example Implementations: Interfaces, WirelessModems, Wireless LANs, etc.

[0128] 6.1.2 Example Modifications

[0129] 6.2 Other Example Applications

[0130] 7.0 Example WLAN Implementation Embodiments

[0131] 7.1 Architecture

[0132] 7.2 Receiver

[0133] 7.2.1 IQ Receiver

[0134] 7.2.2 Multi-Phase IQ Receiver

[0135] 7.2.2.1 Example I/Q Modulation Control Signal Generator Embodiments

[0136] 7.2.2.2 Implementation of Multi-phase I/Q Modulation Receiver Embodiment with Exemplary Waveforms

[0137] 7.2.2.3 Example Single Channel. Receiver Embodiment

[0138] 7.2.2.4 Alternative Example I/Q Modulation Receiver Embodiment

[0139] 7.3 Transmitter

[0140] 7.3.1 Universal Transmitter with 2 UFT Modules

[0141] 7.3.1.1 Balanced Modulator Detailed Description

[0142] 7.3.1.2 Balanced Modulator Example Signal Diagrams and Mathematical Description

[0143] 7.3.1.3 Balanced Modulator Having a Shunt Configuration

[0144] 7.3.1.4 Balanced Modulator FET Configuration

[0145] 7.3.1.5 Universal Transmitter Configured for Carrier Insertion

[0146] 7.3.2 Universal Transmitter In IQ Configuration

[0147] 7.3.2.1 IQ Transmitter Using Series-Type Balanced Modulator

[0148] 7.3.2.2 IQ Transmitter Using Shunt-Type Balanced Modulator

[0149] 7.3.2.3 IQ Transmitters Configured for Carrier Insertion

[0150] 7.4 Transceiver Embodiments

[0151] 7.5 Demodulator/Modulator Facilitation Module

[0152] 7.6 MAC Interface

[0153] 7.7 Control Signal Generator—Synthesizer

[0154] 7.8 LNA/PA

[0155] 8.0 802.11 Physical Layer Configurations

[0156] 9.0 Appendix

[0157] 10.0 Conclusion

[0158] 1. Universal Frequency Translation

[0159] The present invention is related to frequency translation, and applications of same. Such applications include, but are not limited to, frequency down-conversion, fre-

quency up-conversion, enhanced signal reception, unified down-conversion and filtering, and combinations and applications of same.

[0160] **FIG. 1A** illustrates a universal frequency translation (UFT) module **102** according to embodiments of the invention. (The UFT module is also sometimes called a universal frequency translator, or a universal translator.)

[0161] As indicated by the example of **FIG. 1A**, some embodiments of the UFT module **102** include three ports (nodes), designated in **FIG. 1A** as Port **1**, Port **2**, and Port **3**. Other UFT embodiments include other than three ports.

[0162] Generally, the UFT module **102** (perhaps in combination with other components) operates to generate an output signal from an input signal, where the frequency of the output signal differs from the frequency of the input signal. In other words, the UFT module **102** (and perhaps other components) operates to generate the output signal from the input signal by translating the frequency (and perhaps other characteristics) of the input signal to the frequency (and perhaps other characteristics) of the output signal.

[0163] An example embodiment of the UFT module **103** is generally illustrated in **FIG. 1B**. Generally, the UFT module **103** includes a switch **106** controlled by a control signal **108**. The switch **106** is said to be a controlled switch.

[0164] As noted above, some UFT embodiments include other than three ports. For example, and without limitation, **FIG. 2** illustrates an example UFT module **202**. The example UFT module **202** includes a diode **204** having two ports, designated as Port **1** and Port **2**/**3**. This embodiment does not include a third port, as indicated by the dotted line around the "Port **3**" label.

[0165] The UFT module is a very powerful and flexible device. Its flexibility is illustrated, in part, by the wide range of applications in-which it can be used. Its power is illustrated, in part, by the usefulness and performance of such applications.

[0166] For example, a UFT module **115** can be used in a universal frequency down-conversion (UFD) module **114**, an example of which is shown in **FIG. 1C**. In this capacity, the UFT module **115** frequency down-converts an input signal to an output signal.

[0167] As another example, as shown in **FIG. 1D**, a UFT module **117** can be used in a universal frequency up-conversion (UFU) module **116**. In this capacity, the UFT module **117** frequency up-converts an input signal to an output signal.

[0168] These and other applications of the UFT module are described below. Additional applications of the UFT module will be apparent to persons skilled in the relevant art(s) based on the teachings contained herein. In some applications, the UFT module is a required component. In other applications, the UFT module is an optional component.

[0169] 2. Frequency Down-Conversion

[0170] The present invention is directed to systems and methods of universal frequency down-conversion, and applications of same.

[0171] In particular, the following discussion describes down-converting using a Universal Frequency Translation Module. The down-conversion of an EM signal by aliasing the EM signal at an aliasing rate is fully described in co-pending U.S. patent application entitled "Method and System for Down-Converting Electromagnetic Signals," Ser. No. 09/176,022, filed Oct. 21, 1998, issued as U.S. Pat. No. 6,061,551 on May 9, 2000, the full disclosure of which is incorporated herein by reference. A relevant portion of the above mentioned patent application is summarized below to describe down-converting an input signal to produce a down-converted signal that exists at a lower frequency or a baseband signal.

[0172] **FIG. 20A** illustrates an aliasing module **2000** (also called a universal frequency down-conversion module) for down-conversion using a universal frequency translation (UFT) module **2002** which down-converts an EM input signal **2004**. In particular embodiments, aliasing module **2000** includes a switch **2008** and a capacitor **2010**. The electronic alignment of the circuit components is flexible. That is, in one implementation, the switch **2008** is in series with input signal **2004** and capacitor **2010** is shunted to ground (although it may be other than ground in configurations such as differential mode). In a second implementation (see **FIG. 20A-1**), the capacitor **2010** is in series with the input signal **2004** and the switch **2008** is shunted to ground (although it may be other than ground in configurations such as differential mode). Aliasing module **2000** with UFT module **2002** can be easily tailored to down-convert a wide variety of electromagnetic signals using aliasing frequencies that are well below the frequencies of the EM input signal **2004**.

[0173] In one implementation, aliasing module **2000** down-converts the input signal **2004** to an intermediate frequency (IF) signal. In another implementation, the aliasing module **2000** down-converts the input signal **2004** to a demodulated baseband signal. In yet another implementation, the input signal **2004** is a frequency modulated (FM) signal, and the aliasing module **2000** down-converts it to a non-FM signal, such as a phase modulated (PM) signal or an amplitude modulated (AM) signal. Each of the above implementations is described below.

[0174] In an embodiment, the control signal **2006** includes a train of pulses that repeat at an aliasing rate that is equal to, or less than, twice the frequency of the input signal **2004**. In this embodiment, the control signal **2006** is referred to herein as an aliasing signal because it is below the Nyquist rate for the frequency of the input signal **2004**. Preferably, the frequency of control signal **2006** is much less than the input signal **2004**.

[0175] A train of pulses **2018** as shown in **FIG. 20D** controls the switch **2008** to alias the input signal **2004** with the control signal **2006** to generate a down-converted output signal **2012**. More specifically, in an embodiment, switch **2008** closes on a first edge of each pulse **2020** of **FIG. 20D** and opens on a second edge of each pulse. When the switch **2008** is closed, the input signal **2004** is coupled to the capacitor **2010**, and charge is transferred from the input

signal to the capacitor **2010**. The charge stored during successive pulses forms down-converted output signal **2012**.

[**0176**] Exemplary waveforms are shown in **FIGS. 20B-20F**.

[**0177**] **FIG. 20B** illustrates an analog amplitude modulated (AM) carrier signal **2014** that is an example of input signal **2004**. For illustrative purposes, in **FIG. 20C**, an analog AM carrier signal portion **2016** illustrates a portion of the analog AM carrier signal **2014** on an expanded time scale. The analog AM carrier signal portion **2016** illustrates the analog AM carrier signal **2014** from time to t_0 time t_1.

[**0178**] **FIG. 20D** illustrates an exemplary aliasing signal **2018** that is an example of control signal **2006**. Aliasing signal **2018** is on approximately the same time scale as the analog AM carrier signal portion **2016**. In the example shown in **FIG. 20D**, the aliasing signal **2018** includes a train of pulses **2020** having negligible apertures that tend towards zero (the invention is not limited to this embodiment, as discussed below). The pulse aperture may also be referred to as the pulse width as will be understood by those skilled in the art(s). The pulses **2020** repeat at an aliasing rate, or pulse repetition rate of aliasing signal **2018**. The aliasing rate is determined as described below, and further described in co-pending U.S. patent application entitled "Method and System for Down-converting Electromagnetic Signals," application Ser. No. 09/176,022, Attorney Docket Number 1744.0010000, issued as U.S. Pat. No. 6,061,551 on May 9, 2000.

[**0179**] As noted above, the train of pulses **2020** (i.e., control signal **2006**) control the switch **2008** to alias the analog AM carrier signal **2016** (i.e., input signal **2004**) at the aliasing rate of the aliasing signal **2018**. Specifically, in this embodiment, the switch **2008** closes on a first edge of each pulse and opens on a second edge of each pulse. When the switch **2008** is closed, input signal **2004** is coupled to the capacitor **2010**, and charge is transferred from the input signal **2004** to the capacitor **2010**. The charge transferred during a pulse is referred to herein as an under-sample. Exemplary under-samples **2022** form down-converted signal portion **2024** (**FIG. 20E**) that corresponds to the analog AM carrier signal portion **2016** (**FIG. 20C**) and the train of pulses **2020** (**FIG. 20D**). The; charge stored during successive under-samples of AM carrier signal **2014** form the down-converted signal **2024** (**FIG. 20E**) that is an example of down-converted output signal **2012** (**FIG. 20A**). In **FIG. 20F**, a demodulated baseband signal **2026** represents the demodulated baseband signal **2024** after filtering on a compressed time scale. As illustrated, down-converted signal **2026** has substantially the same "amplitude envelope" as AM carrier signal **2014**. Therefore, **FIGS. 20B-20F** illustrate down-conversion of AM carrier signal **2014**.

[**0180**] The waveforms shown in **FIGS. 20B-20F** are discussed herein for illustrative purposes only, and are not limiting. Additional exemplary time domain and frequency domain drawings, and exemplary methods and systems of the invention relating thereto, are disclosed in co-pending U.S. patent application entitled "Method and System for Down-converting Electromagnetic Signals," application Ser. No. 09/176,022, Attorney Docket No. 1744.0010000, issued as U.S. Pat. No. 6,061,551 on May 9, 2000.

[**0181**] The aliasing rate of control signal **2006** determines whether the input signal **2004** is down-converted to an IF signal, down-converted to a demodulated baseband signal, or down-converted from an FM signal to a PM or an AM signal. Generally, relationships between the input signal **2004**, the aliasing rate of the control signal **2006**, and the down-converted output signal **2012** are illustrated below:

(Freq. of input signal **2004**)=n·(Freq. of control signal **2006**)±(Freq. of down-converted output signal **2012**)

[**0182**] For the examples contained herein, only the "+" condition will be discussed. The value of n represents a harmonic or sub-harmonic of input signal **2004** (e.g., n=0.5, 1, 2, 3, . . .).

[**0183**] When the aliasing rate of control signal **2006** is off-set from the frequency of input signal **2004**, or off-set from a harmonic or sub-harmonic thereof, input signal **2004** is down-converted to an IF signal. This is because the under-sampling pulses occur at different phases of subsequent cycles of input signal **2004**. As a result, the under-samples form a lower frequency oscillating pattern. If the input signal **2004** includes lower frequency changes, such as amplitude, frequency, phase, etc., or any combination thereof, the charge stored during associated under-samples reflects the lower frequency changes, resulting in similar changes on the down-converted IF signal. For example, to down-convert a 901 MHZ input signal to a 1 MHZ IF signal, the frequency of the control signal **2006** would be calculated as follows:

$$(Freq_{\text{input}}-Freq_{\text{IF}})/n=Freq_{\text{control}}$$

$$(901\ MHZ-1\ MHZ)/n=900/n$$

[**0184**] For n=0.5, 1, 2, 3, 4, etc., the frequency of the control signal **2006** would be substantially equal to 1.8 GHz, 900 MHZ, 450 MHZ, 300 MHZ, **225** MHZ, etc.

[**0185**] Exemplary time domain and frequency domain drawings, illustrating down-conversion of analog and digital AM, PM and FM signals to IF signals, and exemplary methods and systems thereof, are disclosed in co-pending U.S. patent application entitled "Method and System for Down-converting Electromagnetic Signals," application Ser. No. 09/176,022, Attorney Docket Number 1744.0010000, issued as U.S. Pat. No. 6,061,551 on May 9, 2000.

[**0186**] Alternatively, when the aliasing rate of the control signal **2006** is substantially equal to the frequency of the input signal **2004**, or substantially equal to a harmonic or sub-harmonic thereof, input signal **2004** is directly down-converted to a demodulated baseband signal. This is because, without modulation, the under-sampling pulses occur at the same point of subsequent cycles of the input signal **2004**. As a result, the under-samples form a constant output baseband signal. If the input signal **2004** includes lower frequency changes, such as amplitude, frequency, phase, etc., or any combination thereof, the charge stored during associated under-samples reflects the lower frequency changes, resulting in similar changes on the demodulated baseband signal. For example, to directly down-convert a 900 MHZ input signal to a demodulated baseband signal (i.e., zero IF), the frequency of the control signal **2006** would be calculated as follows:

$$(Freq_{\text{input}}-Freq_{\text{IF}})/n=Freq_{\text{control}}$$

$$(900\ MHZ-0\ MHZ)/n=900\ MHZ/n$$

[**0187**] For n=0.5, 1, 2, 3, 4, etc., the frequency of the control signal **2006** should be substantially equal to 1.8 GHz, 900 MHZ, 450 MHZ, 300 MHZ, 225 MHZ, etc.

[0188] Exemplary time domain and frequency domain drawings, illustrating direct down-conversion of analog and digital AM and PM signals to demodulated baseband signals, and exemplary methods and systems thereof, are disclosed in the co-pending U.S. Pat. No. Application entitled "Method and System for Down-converting Electromagnetic Signals," application Ser. No. 09/176,022, issued as U.S. Pat. No. 6,061,551 on May 9, 2000.

[0189] Alternatively, to down-convert an input FM signal to a non-FM signal, a frequency within the FM bandwidth must be down-converted to baseband (i.e., zero IF). As an example, to down-convert a frequency shift keying (FSK) signal (a sub-set of FM) to a phase shift keying (PSK) signal (a subset of PM), the mid-point between a lower frequency F_1 and an upper frequency F_2 (that is, $[(F_1+F_2)\div 2]$) of the FSK signal is down-converted to zero IF. For example, to down-convert an FSK signal having F_1 equal to 899 MHZ and F_2 equal to 901 MHZ, to a PSK signal, the aliasing rate of the control signal **2006** would be calculated as follows:

$$\begin{aligned}\text{Frequency of the input} &= (F_1 + F_2) \div 2\\ &= (899\ \text{MHZ} + 901\ \text{MHZ}) \div 2\\ &= 900\ \text{MHZ}\end{aligned}$$

[0190] Frequency of the down-converted signal=0 (i.e., baseband)

$$(Freq_{\text{input}} - Freq_{\text{IF}})/n = Freq_{\text{control}}$$

$$(900\ MHZ - 0\ MHZ)/n = 900\ MHZ/n$$

[0191] For n=0.5, 1, 2, 3, etc., the frequency of the control signal **2006** should be substantially equal to 1.8 GHz, 900 MHZ, 450 MHZ, 300 MHZ, 225 MHZ, etc. The frequency of the down-converted PSK signal is substantially equal to one half the difference between the lower frequency F_1 and the upper frequency F_2.

[0192] As another example, to down-convert a FSK signal to an amplitude shift keying (ASK) signal (a subset of AM), either the lower frequency F_1 or the upper frequency F_2 of the FSK signal is down-converted to zero IF. For example, to down-convert an FSK signal having F_1 equal to 900 MHZ and F_2 equal to 901 MHZ, to an ASK signal, the aliasing rate of the control signal **2006** should be substantially equal to:

$$(900\ MHZ - 0\ MHZ)/n = 900\ MHZ/n, \text{ or}$$

$$(901\ MHZ - 0\ MHZ)/n = 901\ MHZ/n.$$

[0193] For the former case of 900 MHZ/n, and for n=0.5, 1, 2, 3, 4, etc., the frequency of the control signal **2006** should be substantially equal to 1.8 GHz, 900 MHZ, 450 MHZ, 300 MHZ, 225 MHZ, etc. For the latter case of901 MHZ/n, and for n=0.5, 1, 2, 3, 4, etc., the frequency of the control signal **2006** should be substantially equal to 1.802 GHz, 901 MHZ, 450.5 MHZ, 300.333 MHZ, 225.25 MHZ, etc. The frequency of the down-converted AM signal is substantially equal to the difference between the lower frequency F_1 and the upper frequency F_2 (i.e., 1 MHZ).

[0194] Exemplary time domain and frequency domain drawings, illustrating down-conversion of FM signals to non-FM signals, and exemplary methods and systems thereof, are disclosed in the co-pending U.S. patent application entitled "Method and System for Down-converting Electromagnetic Signals," application Ser. No. 09/176,022, issued as U.S. Pat. No. 6,061,551 on May 9, 2000.

[0195] In an embodiment, the pulses of the control signal **2006** have negligible apertures that tend towards zero. This makes the UFT module **2002** a high input impedance device. This configuration is useful for situations where minimal disturbance of the input signal may be desired.

[0196] In another embodiment, the pulses of the control signal **2006** have non-negligible apertures that tend away from zero. This makes the UFT module **2002** a lower input impedance device. This allows the lower input impedance of the UFT module **2002** to be substantially matched with a source impedance of the input signal **2004**. This also improves the energy transfer from the input signal **2004** to the down-converted output signal **2012**, and hence the efficiency and signal to noise (s/n) ratio of UFT module **2002**.

[0197] Exemplary systems and methods for generating and optimizing the control signal **2006** and for otherwise improving energy transfer and s/n ratio, are disclosed in the co-pending U.S. patent application entitled "Method and System for Down-converting Electromagnetic Signals," application Ser. No. 09/176,022, issued as U.S. Pat. No. 6,061,551 on May 9, 2000.

[0198] 3. Frequency Up-Conversion

[0199] The present invention is directed to systems and methods of frequency up-conversion, and applications of same.

[0200] An example frequency up-conversion system **300** is illustrated in **FIG. 3**. The frequency up-conversion system **300** is now described.

[0201] An input signal **302** (designated as "Control Signal" in **FIG. 3**) is accepted by a switch module **304**. For purposes of example only, assume that the input signal **302** is a FM input signal **606**, an example of which is shown in **FIG. 6C**. FM input signal **606** may have been generated by modulating information signal **602** onto oscillating signal **604 (FIGS. 6A and 6B)**. It should be understood that the invention is not limited to this embodiment. The information signal **602** can be analog, digital, or any combination thereof, and any modulation scheme can be used.

[0202] The output of switch module **304** is a harmonically rich signal **306**, shown for example in **FIG. 6D** as a harmonically rich signal **608**. The harmonically rich signal **608** has a continuous and periodic waveform.

[0203] **FIG. 6E** is an expanded view of two sections of harmonically rich signal **608**, section **610** and section **612**. The harmonically rich signal **608** may be a rectangular wave, such as a square wave or a pulse (although, the invention is not limited to this embodiment). For ease of discussion, the term "rectangular waveform" is used to refer to waveforms that are substantially rectangular. In a similar manner, the term "square wave" refers to those waveforms that are substantially square and it is not the intent of the present invention that a perfect square wave be generated or needed.

[0204] Harmonically rich signal **608** is comprised of a plurality of sinusoidal waves whose frequencies are integer

multiples of the fundamental frequency of the waveform of the harmonically rich signal **608**. These sinusoidal waves are referred to as the harmonics of the underlying waveform, and the fundamental frequency is referred to as the first harmonic. **FIG. 6F** and **FIG. 6G** show separately the sinusoidal components making up the first, third, and fifth harmonics of section **610** and section **612**. (Note that in theory there may be an infinite number of harmonics; in this example, because harmonically rich signal **608** is shown as a square wave, there are only odd harmonics). Three harmonics are shown simultaneously (but not summed) in **FIG. 6H**.

[**0205**] The relative amplitudes of the harmonics are generally a function of the relative widths of the pulses of harmonically rich signal **306** and the period of the fundamental frequency, and can be determined by doing a Fourier analysis of harmonically rich signal **306**. According to an embodiment of the invention, the input signal **606** may be shaped to ensure that the amplitude of the desired harmonic is sufficient for its intended use (e.g., transmission).

[**0206**] A filter **308** filters out any undesired frequencies (harmonics), and outputs an electromagnetic (EM) signal at the desired harmonic frequency or frequencies as an output signal **310**, shown for example as a filtered output signal **614** in **FIG. 61**.

[**0207**] **FIG. 4** illustrates an example universal frequency up-conversion (UFU) module **401**. The UFU module **401** includes an example switch module **304**, which comprises a bias signal **402**, a resistor or impedance **404**, a universal frequency translator (UFT) **450**, and a ground **408**. The UFT **450** includes a switch **406**. The input signal **302** (designated as "Control Signal" in **FIG. 4**) controls the switch **406** in the UFT **450**, and causes it to close and open. Harmonically rich signal **306** is generated at a node **405** located between the resistor or impedance **404** and the switch **406**.

[**0208**] Also in **FIG. 4**, it can be seen that an example filter **308** is comprised of a capacitor **410** and an inductor **412** shunted to a ground **414**. The filter is designed to filter out the undesired harmonics of harmonically rich signal **306**.

[**0209**] The invention is not limited to the UFU embodiment shown in **FIG. 4**.

[**0210**] For example, in an alternate embodiment shown in **FIG. 5**, an unshaped input signal **501** is routed to a pulse shaping module **502**. The pulse shaping module **502** modifies the unshaped input signal **501** to generate a (modified) input signal **302** (designated as the "Control Signal" in **FIG. 5**). The input signal **302** is routed to the switch module **304**, which operates in the manner described above. Also, the filter **308** of **FIG. 5** operates in the manner described above.

[**0211**] The purpose of the pulse shaping module **502** is to define the pulse width of the input signal **302**. Recall that the input signal **302** controls the opening and closing of the switch **406** in switch module **304**. During such operation, the pulse width of the input signal **302** establishes the pulse width of the harmonically rich signal **306**. As stated above, the relative amplitudes of the harmonics of the harmonically rich signal **306** are a function of at least the pulse width of the harmonically rich signal **306**. As such, the pulse width of the input signal **302** contributes to setting the relative amplitudes of the harmonics of harmonically rich signal **306**.

[**0212**] Further details of up-conversion as described in this section are presented in pending U.S. application "Method and System for Frequency Up-Conversion," Ser. No. 09/176,154, filed Oct. 21, 1998, incorporated herein by reference in its entirety.

[**0213**] 4. Enhanced Signal Reception

[**0214**] The present invention is directed to systems and methods of enhanced signal reception (ESR), and applications of same.

[**0215**] Referring to **FIG. 21**, transmitter **2104** accepts a modulating baseband signal **2102** and generates (transmitted) redundant spectrums **2106***a-n*, which are sent over communications medium **2108**. Receiver **2112** recovers a demodulated baseband signal **2114** from (received) redundant spectrums **2110***a-n*. Demodulated baseband signal **2114** is representative of the modulating baseband signal **2102**, where the level of similarity between the modulating baseband signal **2114** and the modulating baseband signal **2102** is application dependent.

[**0216**] Modulating baseband signal **2102** is preferably any information signal desired for transmission and/or reception. An example modulating baseband signal **2202** is illustrated in **FIG. 22A**, and has an associated modulating baseband spectrum **2204** and image spectrum **2203** that are illustrated in **FIG. 22B**. Modulating baseband signal **2202** is illustrated as an analog signal in **FIG. 22***a*, but could also be a digital signal, or combination thereof. Modulating baseband signal **2202** could be a voltage (or current) characterization of any number of real world occurrences, including for example and without limitation, the voltage (or current) representation for a voice signal.

[**0217**] Each transmitted redundant spectrum **2106***a-n* contains the necessary information to substantially reconstruct the modulating baseband signal **2102**. In other words, each redundant spectrum **2106***a-n* contains the necessary amplitude, phase, and frequency information to reconstruct the modulating baseband signal **2102**.

[**0218**] **FIG. 22C** illustrates example transmitted redundant spectrums **2206***b-d*. Transmitted redundant spectrums **2206***b-d* are illustrated to contain three redundant spectrums for illustration purposes only. Any number of redundant spectrums could be generated and transmitted as will be explained in following discussions.

[**0219**] Transmitted redundant spectrums **2206***b-d* are centered at f_1, with a frequency spacing f_2 between adjacent spectrums. Frequencies f_1 and f_2 are dynamically adjustable in real-time as will be shown below. **FIG. 22D** illustrates an alternate embodiment, where redundant spectrums **2208***c,d* are centered on unmodulated oscillating signal **2209** at f_1 (Hz). Oscillating signal **2209** may be suppressed if desired using, for example, phasing techniques or filtering techniques. Transmitted redundant spectrums are preferably above baseband frequencies as is represented by break **2205** in the frequency axis of **FIGS. 22C and 22D**.

[**0220**] Received redundant spectrums **2110***a-n* are substantially similar to transmitted redundant spectrums **2106***a-n*, except for the changes introduced by the communications medium **2108**. Such changes can include but are not limited to signal attenuation, and signal interference. **FIG. 22E** illustrates example received redundant spectrums **2210***b-d*.

Received redundant spectrums **2210***b-d* are substantially similar to transmitted redundant spectrums **2206***b-d*, except that redundant spectrum **2210***c* includes an undesired jamming signal spectrum **2211** in order to illustrate some advantages of the present invention. Jamming signal spectrum **2211** is a frequency spectrum associated with a jamming signal. For purposes of this invention, a "jamming signal" refers to any unwanted signal, regardless of origin, that may interfere with the proper reception and reconstruction of an intended signal. Furthermore, the jamming signal is not limited to tones as depicted by spectrum **2211**, and can have any spectral shape, as will be understood by those skilled in the art(s).

[**0221**] As stated above, demodulated baseband signal **2114** is extracted from one or more of received redundant spectrums **2210***b-d*. **FIG. 22F** illustrates example demodulated baseband signal **2212** that is, in this example, substantially similar to modulating baseband signal **2202** (**FIG. 22A**); where in practice, the degree of similarity is application dependent.

[**0222**] An advantage of the present invention should now be apparent. The recovery of modulating baseband signal **2202** can be accomplished by receiver **2112** in spite of the fact that high strength jamming signal(s) (e.g. jamming signal spectrum **2211**) exist on the communications medium. The intended baseband signal can be recovered because multiple redundant spectrums are transmitted, where each redundant spectrum carries the necessary information to reconstruct the baseband signal. At the destination, the redundant spectrums are isolated from each other so that the baseband signal can be recovered even if one or more of the redundant spectrums are corrupted by a jamming signal.

[**0223**] Transmitter **2104** will now be explored in greater detail. **FIG. 23A** illustrates transmitter **2301**, which is one embodiment of transmitter **2104** that generates redundant spectrums configured similar to redundant spectrums **2206***b-d*. Transmitter **2301** includes generator **2303**, optional spectrum processing module **2304**, and optional medium interface module **2320**. Generator **2303** includes: first oscillator **2302**, second oscillator **2309**, first stage modulator **2306**, and second stage modulator **2310**.

[**0224**] Transmitter **2301** operates as follows. First oscillator **2302** and second oscillator **2309** generate a first oscillating signal **2305** and second oscillating signal **2312**, respectively. First stage modulator **2306** modulates first oscillating signal **2305** with modulating baseband signal **2202**, resulting in modulated signal **2308**. First stage modulator **2306** may implement any type of modulation including but not limited to: amplitude modulation, frequency modulation, phase modulation, combinations thereof, or any other type of modulation. Second stage modulator **2310** modulates modulated signal **2308** with second oscillating signal **2312**, resulting in multiple redundant spectrums **2206***a-n* shown in **FIG. 23B**. Second stage modulator **2310** is preferably a phase modulator, or a frequency modulator, although other types of modulation may be implemented including but not limited to amplitude modulation. Each redundant spectrum **2206***a-n* contains the necessary amplitude, phase, and frequency information to substantially reconstruct the modulating baseband signal **2202**.

[**0225**] Redundant spectrums **2206***a-n* are substantially centered around f_1, which is the characteristic frequency of first oscillating signal **2305**. Also, each redundant spectrum **2206***a-n* (except for **2206***c*) is offset from f_1 by approximately a multiple of f_2 (Hz), where f_2 is the frequency of the second oscillating signal **2312**. Thus, each redundant spectrum **2206***a-n* is offset from an adjacent redundant spectrum by f_2 (Hz). This allows the spacing between adjacent redundant spectrums to be adjusted (or tuned) by changing f_2 that is associated with second oscillator **2309**. Adjusting the spacing between adjacent redundant spectrums allows for dynamic real-time tuning of the bandwidth occupied by redundant spectrums **2206***a-n*.

[**0226**] In one embodiment, the number of redundant spectrums **2206***a-n* generated by transmitter **2301** is arbitrary and may be unlimited as indicated by the "a-n" designation for redundant spectrums **2206***a-n*. However, a typical communications medium will have a physical and/or administrative limitations (i.e. FCC regulations) that restrict the number of redundant spectrums that can be practically transmitted over the communications medium. Also, there may be other reasons to limit the number of redundant spectrums transmitted. Therefore, preferably, the transmitter **2301** will include an optional spectrum processing module **2304** to process the redundant spectrums **2206***a-n* prior to transmission over communications medium **2108**.

[**0227**] In one embodiment, spectrum processing module **2304** includes a filter with a passband **2207** (**FIG. 23C**) to select redundant spectrums **2206***b-d* for transmission. This will substantially limit the frequency bandwidth occupied by the redundant spectrums to the passband **2207**. In one embodiment, spectrum processing module **2304** also up converts redundant spectrums and/or amplifies redundant spectrums prior to transmission over the communications medium **2108**. Finally, medium interface module **2320** transmits redundant spectrums over the communications medium **2108**. In one embodiment, communications medium **2108** is an over-the-air link and medium interface module **2320** is an antenna. Other embodiments for communications medium **2108** and medium interface module **2320** will be understood based on the teachings contained herein.

[**0228**] **FIG. 23D** illustrates transmitter **2321**, which is one embodiment of transmitter **2104** that generates redundant spectrums configured similar to redundant spectrums **2208***c-d* and unmodulated spectrum **2209**. Transmitter **2321** includes generator **2311**, spectrum processing module **2304**, and (optional) medium interface module **2320**. Generator **2311** includes: first oscillator **2302**, second oscillator **2309**, first stage modulator **2306**, and second stage modulator **2310**.

[**0229**] As shown in **FIG. 23D**, many of the components in transmitter **2321** are similar to those in transmitter **2301**. However, in this embodiment, modulating baseband signal **2202** modulates second oscillating signal **2312**. Transmitter **2321** operates as follows. First stage modulator **2306** modulates second oscillating signal **2312** with modulating baseband signal **2202**, resulting in modulated signal **2322**. As described earlier, first stage modulator **2306** can effect any type of modulation including but not limited to: amplitude modulation frequency modulation, combinations thereof, or any other type of modulation. Second stage modulator **2310** modulates first oscillating signal **2304** with modulated signal **2322**, resulting in redundant spectrums **2208***a-n*, as shown in **FIG. 23E**. Second stage modulator **2310** is pref-

erably a phase or frequency modulator, although other modulators could used including but not limited to an amplitude modulator.

[0230] Redundant spectrums **2208***a-n* are centered on unmodulated spectrum **2209** (at f_1 Hz), and adjacent spectrums are separated by f_2 Hz. The number of redundant spectrums **2208***a-n* generated by generator **2311** is arbitrary and unlimited, similar to spectrums **2206***a-n* discussed, above. Therefore, optional spectrum processing module **2304** may also include a filter with passband **2325** to select, for example, spectrums **2208***c,d* for transmission over communications medium **2108**. In addition, optional spectrum processing module **2304** may also include a filter (such as a bandstop filter) to attenuate unmodulated spectrum **2209**. Alternatively, unmodulated spectrum **2209** may be attenuated by using phasing techniques during redundant spectrum generation. Finally, (optional) medium interface module **2320** transmits redundant spectrums **2208***c,d* over communications medium **2108**.

[0231] Receiver **2112** will now be explored in greater detail to illustrate recovery of a demodulated baseband signal from received redundant spectrums. **FIG. 24A** illustrates receiver **2430**, which is one embodiment of receiver **2112**. Receiver **2430** includes optional medium interface module **2402**, down-converter **2404**, spectrum isolation module **2408**, and data extraction module **2414**. Spectrum isolation module **2408** includes filters **2410***a-c*. Data extraction module **2414** includes demodulators **2416***a-c*, error check modules **2420***a-c*, and arbitration module **2424**. Receiver **2430** will be discussed in relation to the signal diagrams in **FIGS. 24B-24J**.

[0232] In one embodiment, optional medium interface module **2402** receives redundant spectrums **2210***b-d* (**FIG. 22E**, and **FIG. 24B**). Each redundant spectrum **2210***b-d* includes the necessary amplitude, phase, and frequency information to substantially reconstruct the modulating baseband signal used to generated the redundant spectrums. However, in the present example, spectrum **2210***c* also contains jamming signal **2211**, which may interfere with the recovery of a baseband signal from spectrum **2210***c*. Down-converter **2404** down-converts received redundant spectrums **2210***b-d* to lower intermediate frequencies, resulting in redundant spectrums **2406***a-c* (**FIG. 24C**). Jamming signal **2211** is also down-converted to jamming signal **2407**, as it is contained within redundant spectrum **2406***b*. Spectrum isolation module **2408** includes filters **2410***a-c* that isolate redundant spectrums **2406***a-c* from each other (**FIGS. 24D-24F**, respectively). Demodulators **2416***a-c* independently demodulate spectrums **2406***a-c*, resulting in demodulated baseband signals **2418***a-c*, respectively (**FIGS. 24G-241**). Error check modules **2420***a-c* analyze demodulate baseband signal **2418***a-c* to detect any errors. In one embodiment, each error check module **2420***a-c* sets an error flag **2422***a-c* whenever an error is detected in a demodulated baseband signal. Arbitration module **2424** accepts the demodulated baseband signals and associated error flags, and selects a substantially error-free demodulated baseband signal (**FIG. 24J**). In one embodiment, the substantially error-free demodulated baseband signal will be substantially similar to the modulating baseband signal used to generate the received redundant spectrums, where the degree of similarity is application dependent.

[0233] Referring to FIGS. **24G-I**, arbitration module **2424** will select either demodulated baseband signal **2418***a* or **2418***c*, because error check module **2420***b* will set the error flag **2422***b* that is associated with demodulated baseband signal **2418***b*.

[0234] The error detection schemes implemented by the error detection modules include but are not limited to: cyclic redundancy check (CRC) and parity check for digital signals, and various error detections schemes for analog signal.

[0235] Further details of enhanced signal reception as described in this section are presented in pending U.S. application "Method and System for Ensuring Reception of a Communications Signal," Ser. No. 09/176,415, filed Oct. 21, 1998, issued as U.S. Pat. No. 6,061,555 on May 9, 2000.

[0236] 5. Unified Down-Conversion and Filtering

[0237] The present invention is directed to systems and methods of unified down-conversion and filtering (UDF), and applications of same.

[0238] In particular, the present invention includes a unified down-converting and filtering (UDF) module that performs frequency selectivity and frequency translation in a unified (i.e., integrated) manner. By operating in this manner, the invention achieves high frequency selectivity prior to frequency translation (the invention is not limited to this embodiment). The invention achieves high frequency selectivity at substantially any frequency, including but not limited to RF (radio frequency) and greater frequencies. It should be understood that the invention is not limited to this example of RF and greater frequencies. The invention is intended, adapted, and capable of working with lower than radio frequencies.

[0239] **FIG. 17** is a conceptual block diagram of a UDF module **1702** according to an embodiment of the present invention. The UDF module **1702** performs at least frequency translation and frequency selectivity.

[0240] The effect achieved by the UDF module **1702** is to perform the frequency selectivity operation prior to the performance of the frequency translation operation. Thus, the UDF module **1702** effectively performs input filtering.

[0241] According to embodiments of the present invention, such input filtering involves a relatively narrow bandwidth. For example, such input filtering may represent channel select filtering, where the filter bandwidth may be, for example, 50 KHz to 150 KHz It should be understood, however, that the invention is not limited to these frequencies. The invention is intended, adapted, and capable of achieving filter bandwidths of less than and greater than these values.

[0242] In embodiments of the invention, input signals **1704** received by the UDF module **1702** are at radio frequencies. The UDF module **1702** effectively operates to input filter these RF input signals **1704**. Specifically, in these embodiments, the UDF module **1702** effectively performs input, channel select filtering of the RF input signal **1704**. Accordingly, the invention achieves high selectivity at high frequencies.

[0243] The UDF module **1702** effectively performs various types of filtering, including but not limited to bandpass

filtering, low pass filtering, high pass filtering, notch filtering, all pass filtering, band stop filtering, etc., and combinations thereof.

[0244] Conceptually, the UDF module **1702** includes a frequency translator **1708**. The frequency translator **1708** conceptually represents that portion of the UDF module **1702** that performs frequency translation (down conversion).

[0245] The UDF module **1702** also conceptually includes an apparent input filter **1706** (also sometimes called an input filtering emulator). Conceptually, the apparent input filter **1706** represents that portion of the UDF module **1702** that performs input filtering.

[0246] In practice, the input filtering operation performed by the UDF module **1702** is integrated with the frequency translation operation. The input filtering operation can be viewed as being performed concurrently with the frequency translation operation. This is a reason why the input filter **1706** is herein referred to as an "apparent" input filter **1706**.

[0247] The UDF module **1702** of the present invention includes a number of advantages. For example, high selectivity at high frequencies is realizable using the UDF module **1702**. This feature of the invention is evident by the high Q factors that are attainable. For example, and without limitation, the UDF module **1702** can be designed with a filter center frequency f_C on the order of 900 MHZ, and a filter bandwidth on the order of 50 KHz. This represents a Q of 18,000 (Q is equal to the center frequency divided by the bandwidth).

[0248] It should be understood that the invention is not limited to filters with high Q factors. The filters contemplated by the present invention may have lesser or greater Qs, depending on the application, design, and/or implementation. Also, the scope of the invention includes filters where Q factor as discussed herein is not applicable.

[0249] The invention exhibits additional advantages. For example, the filtering center frequency f_C of the UDF module **1702** can be electrically adjusted, either statically or dynamically.

[0250] Also, the UDF module **1702** can be designed to amplify input signals.

[0251] Further, the UDF module **1702** can be implemented without large resistors, capacitors, or inductors. Also, the UDF module **1702** does not require that tight tolerances be maintained on the values of its individual components, i.e., its resistors, capacitors, inductors, etc. As a result, the architecture of the UDF module **1702** is friendly to integrated circuit design techniques and processes.

[0252] The features and advantages exhibited by the UDF module **1702** are achieved at least in part by adopting a new technological paradigm with respect to frequency selectivity and translation. Specifically, according to the present invention, the UDF module **1702** performs the frequency selectivity operation and the frequency translation operation as a single, unified (integrated) operation. According to the invention, operations relating to frequency translation also contribute to the performance of frequency selectivity, and vice versa.

[0253] According to embodiments of the present invention, the UDF module generates an output signal from an input signal using samples/instances of the input signal and samples/instances of the output signal.

[0254] More particularly, first, the input signal is undersampled. This input sample includes information (such as amplitude, phase, etc.) representative of the input signal existing at the time the sample was taken.

[0255] As described further below, the effect of repetitively performing this step is to translate the frequency (that is, down-convert) of the input signal to a desired lower frequency, such as an intermediate frequency (IF) or baseband.

[0256] Next, the input sample is held (that is, delayed).

[0257] Then, one or more delayed input samples (some of which may have been scaled) are combined with one or more delayed instances of the output signal (some of which may have been scaled) to generate a current instance of the output signal.

[0258] Thus, according to a preferred embodiment of the invention, the output signal is generated from prior samples/instances of the input signal and/or the output signal. (It is noted that, in some embodiments of the invention, current samples/instances of the input signal and/or the output signal may be used to generate current instances of the output signal.). By operating in this manner, the UDF module preferably performs input filtering and frequency down-conversion in a unified manner.

[0259] **FIG. 19** illustrates an example implementation of the unified down-converting and filtering (UDF) module **1922**. The UDF module **1922** performs the frequency translation operation and the frequency selectivity operation in an integrated, unified manner as described above, and as further described below.

[0260] In the example of **FIG. 19**, the frequency selectivity operation performed by the UDF module **1922** comprises a band-pass filtering operation according to EQ. 1, below, which is an example representation of a band-pass filtering transfer function.

$$VO=\alpha_1 z^{-1}VI-\beta_1 z^{-1}VO-\beta_0 z^{-2}VO \qquad \text{EQ. 1}$$

[0261] It should be noted, however, that the invention is not limited to band-pass filtering. Instead, the invention effectively performs various types of filtering, including but not limited to bandpass filtering, low pass filtering, high pass filtering, notch filtering, all pass filtering, band stop filtering, etc., and combinations thereof. As will be appreciated, there are many representations of any given filter type. The invention is applicable to these filter representations. Thus, EQ. 1 is referred to herein for illustrative purposes only, and is not limiting.

[0262] The UDF module **1922** includes a down-convert and delay module **1924**, first and second delay modules **1928** and **1930**, first and second scaling modules **1932** and **1934**, an output sample and hold module **1936**, and an (optional) output smoothing module **1938**. Other embodiments of the UDF module will have these components in different configurations, and/or a subset of these components, and/or additional components. For example, and without limitation, in the configuration shown in **FIG. 19**, the output smoothing module **1938** is optional.

[0263] As further described below, in the example of **FIG. 19**, the down-convert and delay module **1924** and the first and second delay modules **1928** and **1930** include switches that are controlled by a clock having two phases, ϕ_1 and ϕ_2. ϕ_1 and ϕ_2 preferably have the same frequency, and are non-overlapping (alternatively, a plurality such as two clock signals having these characteristics could be used). As used herein, the term "non-overlapping" is defined as two or more signals where only one of the signals is active at any given time. In some embodiments, signals are "active" when they are high. In other embodiments, signals are active when they are low.

[0264] Preferably, each of these switches closes on a rising edge of ϕ_1 or ϕ_2, and opens on the next corresponding falling edge of ϕ_1 or ϕ_2. However, the invention is not limited to this example. As will be apparent to persons skilled in the relevant art(s), other clock conventions can be used to control the switches.

[0265] In the example of **FIG. 19**, it is assumed that α_1 is equal to one. Thus, the output of the down-convert and delay module **1924** is not scaled. As evident from the embodiments described above, however, the invention is not limited to this example.

[0266] The example UDF module **1922** has a filter center frequency of 900.2 MHZ and a filter bandwidth of 570 KHz. The pass band of the UDF module **1922** is on the order of 899.915 MHZ to 900.485 MHZ. The Q factor of the UDF module **1922** is approximately 1879 (i.e., 900.2 MHZ divided by 570 KHz).

[0267] The operation of the UDF module **1922** shall now be described with reference to a Table **1802** (**FIG. 18**) that indicates example values at nodes in the UDF module **1922** at a number of consecutive time increments. It is assumed in Table **1802** that the UDF module **1922** begins operating at time t−1. As indicated below, the UDF module **1922** reaches steady state a few time units after operation begins. The number of time units necessary for a given UDF module to reach steady state depends on the configuration of the UDF module, and will be apparent to persons skilled in the relevant art(s) based on the teachings contained herein.

[0268] At the rising edge of ϕ_1 at time t−1, a switch **1950** in the down-convert and delay module **1924** closes. This allows a capacitor **1952** to charge to the current value of an input signal, VI_{t-1}, such that node **1902** is at VI_{t-1}. This is indicated by cell **1804** in **FIG. 18**. In effect, the combination of the switch **1950** and the capacitor **1952** in the down-convert and delay module **1924** operates to translate the frequency of the input signal VI to a desired lower frequency, such as IF or baseband. Thus, the value stored in the capacitor **1952** represents an instance of a down-converted image of the input signal VI.

[0269] The manner in which the down-convert and delay module **1924** performs frequency down-conversion is further described elsewhere in this application, and is additionally described in pending U.S. application "Method and System for Down-Converting Electromagnetic Signals," Ser. No. 09/176,022, filed Oct. 21, 1998, issued as U.S. Pat. No. 6,061,551 on May 9, 2000, which is herein incorporated by reference in its entirety.

[0270] Also at the rising edge of ϕ_1 at time t−1, a switch **1958** in the first delay module **1928** closes, allowing a capacitor **1960** to charge to VO_{t-1}, such that node **1906** is at VO_{t-1}. This is indicated by cell **1806** in Table **1802**. (In practice, VO_{t-1} is undefined at this point. However, for ease of understanding, VO_{t-1} shall continue to be used for purposes of explanation.)

[0271] Also at the rising edge of ϕ_1 at time t−1, a switch **1966** in the second delay module **1930** closes, allowing a capacitor **1968** to charge to a value stored in a capacitor **1964**. At this time, however, the value in capacitor **1964** is undefined, so the value in capacitor **1968** is undefined. This is indicated by cell **1807** in table **1802**.

[0272] At the rising edge of ϕ_2 at time t−1, a switch **1954** in the down-convert and delay module **1924** closes, allowing a capacitor **1956** to charge to the level of the capacitor **1952**. Accordingly, the capacitor **1956** charges to VI_{t-1}, such that node **1904** is at VI_{t-1}. This is indicated by cell **1810** in Table **1802**.

[0273] The UDF module **1922** may optionally include a unity gain module **1990**A between capacitors **1952** and **1956**. The unity gain module **1990**A operates as a current source to enable capacitor **1956** to charge without draining the charge from capacitor **1952**. For a similar reason, the UDF module **1922** may include other unity gain modules **1990**B-**1990**G. It should be understood that, for many embodiments and applications of the invention, these unity gain modules **1990**A-**1990**G are optional. The structure and operation of the unity gain modules **1990** will be apparent to persons skilled in the relevant art(s).

[0274] Also at the rising edge of ϕ_2 at time t−1, a switch **1962** in the first delay module **1928** closes, allowing a capacitor **1964** to charge to the level of the capacitor **1960**. Accordingly, the capacitor **1964** charges to VO_{t-1}, such that node **1908** is at VO_{t-1}. This is indicated by cell **1814** in Table **1802**.

[0275] Also at the rising edge of ϕ_2 at time t−1, a switch **1970** in the second delay module **1930** closes, allowing a capacitor **1972** to charge to a value stored in a capacitor **1968**. At this time, however, the value in capacitor **1968** is undefined, so the value in capacitor **1972** is undefined. This is indicated by cell **1815** in table **1802**.

[0276] At time t, at the rising edge of ϕ_1, the switch **1950** in the down-convert and delay module **1924** closes. This allows the capacitor **1952** to charge to VI_t, such that node **1902** is at VI_t. This is indicated in cell **1816** of Table **1802**.

[0277] Also at the rising edge of ϕ_1 at time t, the switch **1958** in the first delay module **1928** closes, thereby allowing the capacitor **1960** to charge to VO_t. Accordingly, node **1906** is at VO_t. This is indicated in cell **1820** in Table **1802**.

[0278] Further at the rising edge of ϕ_1 at time t, the switch **1966** in the second delay module **1930** closes, allowing a capacitor **1968** to charge to the level of the capacitor **1964**. Therefore, the capacitor **1968** charges to VO_{t-1}, such that node **1910** is at VO_{t-1}. This is indicated by cell **1824** in Table **1802**.

[0279] At the rising edge of ϕ_2 at time t, the switch **1954** in the down-convert and delay module **1924** closes, allowing the capacitor **1956** to charge to the level of the capacitor **1952**. Accordingly, the capacitor **1956** charges to VI_t, such that node **1904** is at VI_t. This is indicated by cell **1828** in Table **1802**.

[0280] Also at the rising edge of ϕ_2 at time t, the switch **1962** in the first delay module **1928** closes, allowing the capacitor **1964** to charge to the level in the capacitor **1960**. Therefore, the capacitor **1964** charges to VO_t, such that node **1908** is at VO_t. This is indicated by cell **1832** in Table **1802**.

[0281] Further at the rising edge of ϕ_2 at time t, the switch **1970** in the second delay module **1930** closes, allowing the capacitor **1972** in the second delay module **1930** to charge to the level of the capacitor **1968** in the second delay module **1930**. Therefore, the capacitor **1972** charges to VO_{t-1}, such that node **1912** is at VO_{t-1}. This is indicated in cell **1836** of **FIG. 18**.

[0282] At time t+1, at the rising edge of ϕ_1, the switch **1950** in the down-convert and delay module **1924** closes, allowing the capacitor **1952** to charge to VI_{t+1}. Therefore, node **1902** is at VI_{t+1}, as indicated by cell **1838** of Table **1802**.

[0283] Also at the rising edge of ϕ_1 at time t+1, the switch **1958** in the first delay module **1928** closes, allowing the capacitor **1960** to charge to VO_{t+1}. Accordingly, node **1906** is at VO_{t+1}, as indicated by cell **1842** in Table **1802**.

[0284] Further at the rising edge of ϕ_1 at time t+1, the switch **1966** in the second delay module **1930** closes, allowing the capacitor **1968** to charge to the level of the capacitor **1964**. Accordingly, the capacitor **1968** charges to VO_t, as indicated by cell **1846** of Table **1802**.

[0285] In the example of **FIG. 19**, the first scaling module **1932** scales the value at node **1908** (i.e., the output of the first delay module **1928**) by a scaling factor of −0.1. Accordingly, the value present at node **1914** at time t+1 is $-0.1*VO_t$. Similarly, the second scaling module **1934** scales the value present at node **1912** (i.e., the output of the second scaling module **1930**) by a scaling factor of −0.8. Accordingly, the value present at node **1916** is $-0.8*VO_{t-1}$ at time t+1.

[0286] At time t+1, the values at the inputs of the summer **1926** are: VI_t at node **1904**, $-0.1*VO_t$ at node **1914**, and $-0.8*VO_{t-1}$ at node **1916** (in the example of **FIG. 19**, the values at nodes **1914** and **1916** are summed by a second summer **1925**, and this sum is presented to the summer **1926**). Accordingly, at time t+1, the summer generates a signal equal to $VI_t-0.1*VO_t-0.8*VO_{t-1}$.

[0287] At the rising edge of ϕ_1, at time t+1, a switch **1991** in the output sample and hold module **1936** closes, thereby allowing a capacitor **1992** to charge to VO_{t+1}. Accordingly, the capacitor **1992** charges to VO_{t+1}, which is equal to the sum generated by the adder **1926**. As just noted, this value is equal to: $VI_t-0.1*VO_t-0.8*VO_{t-1}$. This is indicated in cell **1850** of Table **1802**. This value is presented to the optional output smoothing module **1938**, which smooths the signal to thereby generate the instance of the output signal VO_{t+1}. It is apparent from inspection that this value of VO_{t+1} is consistent with the band pass filter transfer function of EQ. 1.

[0288] Further details of unified down-conversion and filtering as described in this section are presented in pending U.S. application "Integrated Frequency Translation And Selectivity," Ser. No. 09/175,966, filed Oct. 21, 1998, issued as U.S. Pat. No. 6,049,706 on Apr. 11, 2000, incorporated herein by reference in its entirety.

[0289] 6. Example Application Embodiments of the Invention

[0290] As noted above, the UFT module of the present invention is a very powerful and flexible device. Its flexibility is illustrated, in part, by the wide range of applications in which it can be used. Its power is illustrated, in part, by the usefulness and performance of such applications.

[0291] Example applications of the UFT module were described above. In particular, frequency down-conversion, frequency up-conversion, enhanced signal reception, and unified down-conversion and filtering applications of the UFT module were summarized above, and are further described below. These applications of the UFT module are discussed herein for illustrative purposes. The invention is not limited to these example applications. Additional applications of the UFT module will be apparent to persons skilled in the relevant art(s), based on the teachings contained herein.

[0292] For example, the present invention can be used in applications that involve frequency down-conversion. This is shown in **FIG. 1C**, for example, where an example UFT module **115** is used in a down-conversion module **114**. In this capacity, the UFT module **115** frequency down-converts an input signal to an output signal. This is also shown in **FIG. 7**, for example, where an example UFT module **706** is part of a down-conversion module **704**, which is part of a receiver **702**.

[0293] The present invention can be used in applications that involve frequency up-conversion. This is shown in **FIG. 1D**, for example, where an example UFT module **117** is used in a frequency up-conversion module **116**. In this capacity, the UFT module **117** frequency up-converts an input signal to an output signal. This is also shown in **FIG. 8**, for example, where an example UFT module **806** is part of up-conversion module **804**, which is part of a transmitter **802**.

[0294] The present invention can be used in environments having one or more transmitters **902** and one or more receivers **906**, as illustrated in **FIG. 9**. In such environments, one or more of the transmitters **902** may be implemented using a UFT module, as shown for example in **FIG. 8**. Also, one or more of the receivers **906** may be implemented using a UFT module, as shown for example in **FIG. 7**.

[0295] The invention can be used to implement a transceiver. An example transceiver **1002** is illustrated in **FIG. 10**. The transceiver **1002** includes a transmitter **1004** and a receiver **1008**. Either the transmitter **1004** or the receiver **1008** can be implemented using a UFT module. Alternatively, the transmitter **1004** can be implemented using a UFT module **1006**, and the receiver **1008** can be implemented using a UFT module **1010**. This embodiment is shown in **FIG. 10**.

[0296] Another transceiver embodiment according to the invention is shown in **FIG. 11**. In this transceiver **1102**, the transmitter **1104** and the receiver **1108** are implemented using a single UFT module **1106**. In other words, the transmitter **1104** and the receiver **1108** share a UFT module **1106**.

[0297] As described elsewhere in this application, the invention is directed to methods and systems for enhanced

signal reception (ESR). Various ESR embodiments include an ESR module (transmit) in a transmitter **1202**, and an ESR module (receive) in a receiver **1210**. An example ESR embodiment configured in this manner is illustrated in **FIG. 12**.

[**0298**] The ESR module (transmit) **1204** includes a frequency up-conversion module **1206**. Some embodiments of this frequency up-conversion module **1206** may be implemented using a UFT module, such as that shown in **FIG. 1D**.

[**0299**] The ESR module (receive) **1212** includes a frequency down-conversion module **1214**. Some embodiments of this frequency down-conversion module **1214** may be implemented using a UFT module, such as that shown in **FIG. 1C**.

[**0300**] As described elsewhere in this application, the invention is directed to methods and systems for unified down-conversion and filtering (UDF). An example unified down-conversion and filtering module **1302** is illustrated in **FIG. 13**. The unified down-conversion and filtering module **1302** includes a frequency down-conversion module **1304** and a filtering module **1306**. According to the invention, the frequency down-conversion module **1304** and the filtering module **1306** are implemented using a UFT module **1308**, as indicated in **FIG. 13**.

[**0301**] Unified down-conversion and filtering according to the invention is useful in applications involving filtering and/or frequency down-conversion. This is depicted, for example, in **FIGS. 15A-15F**. **FIGS. 15A-15C** indicate that unified down-conversion and filtering according to the invention is useful in applications where filtering precedes, follows, or both precedes and follows frequency down-conversion. **FIG. 1** SD indicates that a unified down-conversion and filtering module **1524** according to the invention can be utilized as a filter **1522** (i.e., where the extent of frequency down-conversion by the down-converter in the unified down-conversion and filtering module **1524** is minimized). **FIG. 15E** indicates that a unified down-conversion and filtering module **1528** according to the invention can be utilized as a down-converter **1526** (i.e., where the filter in the unified down-conversion and filtering module **1528** passes substantially all frequencies). **FIG. 15F** illustrates that the unified down-conversion and filtering module **1532** can be used as an amplifier. It is noted that one or more UDF modules can be used in applications that involve at least one or more of filtering, frequency translation, and amplification.

[**0302**] For example, receivers, which typically perform filtering, down-conversion, and filtering operations, can be implemented using one or more unified down-conversion and filtering modules. This is illustrated, for example, in **FIG. 14**.

[**0303**] The methods and systems of unified down-conversion and filtering of the invention have many other applications. For example, as discussed herein, the enhanced signal reception (ESR) module (receive) operates to down-convert a signal containing a plurality of spectrums. The ESR module (receive) also operates to isolate the spectrums in the down-converted signal, where such isolation is implemented via filtering in some embodiments. According to embodiments of the invention, the ESR module (receive) is implemented using one or more unified down-conversion and filtering (UDF) modules. This is illustrated, for example, in **FIG. 16**. In the example of **FIG. 16**, one or more of the UDF modules **1610**, **1612**, **1614** operates to down-convert a received signal. The UDF modules **1610**, **1612**, **1614** also operate to filter the down-converted signal so as to isolate the spectrum(s) contained therein. As noted above, the UDF modules **1610**, **1612**, **1614** are implemented using the universal frequency translation (UFT) modules of the invention.

[**0304**] The invention is not limited to the applications of the UFT module described above. For example, and without limitation, subsets of the applications (methods and/or structures) described herein (and others that would be apparent to persons skilled in the relevant art(s) based on the herein teachings) can be associated to form useful combinations.

[**0305**] For example, transmitters and receivers are two applications of the UFT module. **FIG. 10** illustrates a transceiver **1002** that is formed by combining these two applications of the UFT module, i.e., by combining a transmitter **1004** with a receiver **1008**.

[**0306**] Also, ESR (enhanced signal reception) and unified down-conversion and filtering are two other applications of the UFT module. **FIG. 16** illustrates an example where ESR and unified down-conversion and filtering are combined to form a modified enhanced signal reception system.

[**0307**] The invention is not limited to the example applications of the UFT module discussed herein. Also, the invention is not limited to the example combinations of applications of the UFT module discussed herein. These examples were provided for illustrative purposes only, and are not limiting. Other applications and combinations of such applications will be apparent to persons skilled in the relevant art(s) based on the teachings contained herein. Such applications and combinations include, for example and without limitation, applications/combinations comprising and/or involving one or more of: (1) frequency translation; (2) frequency down-conversion; (3) frequency up-conversion; (4) receiving; (5) transmitting; (6) filtering; and/or (7) signal transmission and reception in environments containing potentially jamming signals.

[**0308**] Additional example applications are described below.

[**0309**] 6.1 Data Communication

[**0310**] The invention is directed to data communication among data processing devices. For example, and without limitation, the invention is directed to computer networks such as, for example, local area networks (LANs), wide area networks (WANs), including wireless LANs (WLANs) and wireless WANs, modulator/demodulators (modems), including wireless modems, etc.

[**0311**] **FIG. 25** illustrates an example environment **2502** wherein computers **2504**, **2512**, and **2526** communicate with one another via a computer network **2534**. It is noted that the invention is not limited to computers, but encompasses any data processing and/or communications device or other device where communications with external devices is desired. Also, the invention includes but si not limited to WLAN client (also called mobile terminals, and/or stations) and infrastructure devices (also called access points). In the example of **FIG. 25**, computer **2504** is communicating with

the network **2534** via a wired link, whereas computers **2512** and **2526** are communicating with the network **2534** via wireless links.

[**0312**] In the teachings contained herein, for illustrative purposes, a link may be designated as being a wired link or a wireless link. Such designations are for example purposes only, and are not limiting. A link designated as being wireless may alternatively be wired. Similarly, a link designated as being wired may alternatively be wireless. This is applicable throughout the entire application.

[**0313**] The computers **2504**, **2512** and **2526** each include an interface **2506**, **2514**, and **2528**, respectively, for communicating with the network **2534**. The interfaces **2506**, **2514**, and **2528** include transmitters **2508**, **2516**, and **2530** respectively. Also, the interfaces **2506**, **2514** and **2528** include receivers **2510**, **2518**, and **2532** respectively. In embodiments of the invention, the transmitters **2508**, **2516** and **2530** are implemented using UFT modules for performing frequency up-conversion operations (see, for example, **FIG. 8**). In embodiments, the receivers **2510**, **2518** and **2532** are implemented using UFT modules for performing frequency down-conversion operations (see, for example, **FIG. 7**).

[**0314**] As noted above, the computers **2512** and **2526** interact with the network **2534** via wireless links. In embodiments of the invention, the interfaces **2514**, **2528** in computers **2512**, **2526** represent modulator/demodulators (modems).

[**0315**] In embodiments, the network **2534** includes an interface or modem **2520** for communicating with the modems **2514**, **2528** in the computers **2512**, **2526**. In embodiments, the interface **2520** includes a transmitter **2522**, and a receiver **2524**. Either or both of the transmitter **2522**, and the receiver **2524** are implemented using UFT modules for performing frequency translation operations (see, for example, **FIGS. 7 and 8**).

[**0316**] In alternative embodiments, one or more of the interfaces **2506**, **2514**, **2520**, and **2528** are implemented using transceivers that employ one or more UFT modules for performing frequency translation operations (see, for example, **FIGS. 10 and 11**).

[**0317**] **FIG. 26** illustrates another example data communication embodiment **2602**. Each of a plurality of computers **2604**, **2612**, **2614** and **2616** includes an interface, such as an interface **2606** shown in the computer **2604**. It should be understood that the other computers **2612**, **2614**, **2616** also include an interface such as an interface **2606**. The computers **2604**, **2612**, **2614** and **2616** communicate with each other via interfaces **2606** and wireless or wired links, thereby collectively representing a data communication network.

[**0318**] The interfaces **2606** may represent any computer interface or port, such as but not limited to a high speed internal interface, a wireless serial port, a wireless PS2 port, a wireless USB port, PCMCIA port, etc.

[**0319**] The interface **2606** includes a transmitter **2608** and a receiver **2610**. In embodiments of the invention, either or both of the transmitter **2608** and the receiver **2610** are implemented using UFT modules for frequency up-conversion and down-conversion (see, for example, **FIGS. 7 and 8**). Alternatively, the interfaces **2806** can be implemented using a transceiver having one or more UFT modules for performing frequency translation operations (see, for example, **FIGS. 10 and 11**).

[**0320**] **FIGS. 33-38** illustrate other scenarios envisioned and encompassed by the invention. **FIG. 33** illustrates a data processing environment **3302** wherein a wired network, such as an Ethernet network **3304**, is linked to another network, such as a WLAN **3306**, via a wireless link **3308**. The wireless link **3308** is established via interfaces **3310**, **3312** which are preferably implemented using universal frequency translation modules.

[**0321**] **FIGS. 35-38** illustrate that the present invention supports WLANs that are located in one or more buildings or over any defined geographical area, as shown in **FIGS. 35-38**.

[**0322**] The invention includes multiple networks linked together. The invention also envisions wireless networks conforming to any known or custom standard or specification. This is shown in **FIG. 34**, for example, where any combination of WLANs conforming to any WLAN standard or configuration, such as IEEE 802.11 and Bluetooth (or other relatively short range communication specification or standard), any WAN cellular or telephone standard or specification, any type of radio links, any custom standard or specification, etc., or combination thereof, can be implemented using the universal frequency translation technology described herein. Also, any combination of these networks may be coupled together, as illustrated in **FIG. 34**.

[**0323**] The invention supports WLANs that are located in one or multiple buildings, as shown in **FIGS. 35 and 36**. The invention also supports WLANs that are located in an area including and external to one or more buildings, as shown in **FIG. 37**. In fact, the invention is directed to networks that cover any defined geographical area, as shown in **FIG. 38**. In the embodiments described above, wireless links are preferably established using WLAN interfaces as described herein.

[**0324**] More generally, the invention is directed to WLAN client devices and WLAN infrastructure devices. "WLAN Client Devices" refers to, for example, any data processing and/or communication devices in which wired or wireless communication functionality is desired, such as but not limited to computers, personal data assistants (PDAs), automatic identification data collection devices (such as bar code scanners/readers, electronic article surveillance readers, and radio frequency identification readers), telephones, network devices, etc., and combinations thereof "WLAN Infrastructure Devices" refers to, for example, Access Points and other devices used to provide the ability for WLAN Client Devices (as well as potentially other devices) to connect to wired and/or wireless networks and/or to provide the network functionality of a WLAN. "WLAN" refers to, for example, a Wireless Local Area Network that is implemented according to and that operates within WLAN standards and/or specifications, such as but not limited to IEEE 802.11, IEEE 802.11a, IEEE 802.11b, HomeRF, Proxim Range LAN, Proxim Range LAN2, Symbol Spectrum 1, Symbol Spectrum 24 asit existed priorto adoption of IEEE 802.11, HiperLAN1, or HiperLAN2. WLAN client devices and/or WLAN infrastructure devices may operate in a multimode capacity. For example, a device may include WLAN and WAN functionality. Another device may include WLAN

and short range communication (such as but not limited to Blue Tooth) functionality. Another device may include WLAN and WAN and short range communication functionality. It is noted that the above definitions and examples are provided for illustrative purposes, and are not limiting. Equivalents to that described above will be apparent to persons skilled in the relevant art(s) based on the teachings contained herein.

[0325] 6.1.1. Example Implementations: Interfaces, Wireless Modems, Wireless LANs, etc.

[0326] The present invention is now described as implemented in an interface, such as a wireless modem or other device (such as client or infrastructure device), which can be utilized to implement or interact with a wireless local area network (WLAN) or wireless wide area network (WWAN), for example. In an embodiment, the present invention is implemented in a WLAN to support IEEE WLAN Standard 802.11, but this embodiment is mentioned for illustrative purposes only. The invention is not limited to this standard.

[0327] Conventional wireless modems are described in, for example, U.S. Pat. No. 5,764,693, titled, "Wireless Radio Modem with Minimal Inter-Device RF Interference," incorporated herein by reference in its entirety. The present invention replaces a substantial portion of conventional wireless modems with one or more universal frequency translators (UFTs). The resultant improved wireless modem consumes less power that conventional wireless modems and is easier and less expensive to design and build. A wireless modem in accordance with the present invention can be implemented in a PC-MCIA card or within a main housing of a computer, for example.

[0328] **FIG. 27** illustrates an example block diagram of a computer system **2710**, which can be wirelessly coupled to a LAN, as illustrated in **FIGS. 25 and 26**. The computer system **2710** includes an interface **2714** and an antenna **2712**. The interface **2714** includes a transmitter module **2716** that receives information from a digital signal processor (D SP) **2720**, and modulates and up-converts the information for transmission from the antenna **2712**. The interface **2714** also includes a receiver module **2718** that receives modulated carrier signals via the antenna **2712**. The receiver module **2718** down-converts and demodulates the modulated carrier signals to baseband information, and provides the baseband information to the DSP **2720**. The DSP **2720** can include a central processing unit (CPU) and other components of the computer **2712**. Conventionally, the interface **2714** is implemented with heterodyne components.

[0329] **FIG. 28** illustrates an example interface **2810** implemented with heterodyne components. The interface **2810** includes a transmitter module **2812** and a receiver module **2824**. The receiver module **2824** includes an RF section **2830**, one or more IF sections **2828**, a demodulator section **2826**, an optional analog to digital (A/D) converter **2834**, and a frequency generator/synthesizer **2832**. The transmitter module **2812** includes an optional digital to analog (D/A) converter **2822**, a modulator section **2818**, one or more IF sections **2816**, an RF section **2814**, and a frequency generator/synthesizer **2820**. Operation of the interface **2810** will be apparent to one skilled in the relevant art(s), based on the description herein.

[0330] **FIG. 29** illustrates an example in-phase/quadrature-phase (I/Q) interface **2910** implemented with heterodyne components. I/Q implementations allow two channels of information to be communicated on a carrier signal and thus can be utilized to increase data transmission.

[0331] The interface **2910** includes a transmitter module **2912** and a receiver module **2934**. The receiver module **2934** includes an RF section **2936**, one or more IF sections **2938**, an I/Q demodulator section **2940**, an optional A/D converter **2944**, and a frequency generator/synthesizer **2942**. The I/Q demodulator section **2940** includes a signal splitter **2946**, mixers **2948**, and a phase shifter **2950**. The signal splitter **2946** provides a received signal to the mixers **2949**. The phase shifter **2950** operates the mixers **2948** ninety degrees out of phase with one another to generate I and Q information channels **2952** and **2954**, respectively, which are provided to a DSP **2956** through the optional A/D converter **2944**.

[0332] The transmitter module **2912** includes an optional D/A converter **2922**, an I/Q modulator section **2918**, one or more IF sections **2916**, an RF section **2914**, and a frequency generator/synthesizer **2920**. The I/Q modulator section **2918** includes mixers **2924**, a phase shifter **2926**, and a signal combiner **2928**. The phase shifter **2926** operates the mixers **2924** ninety degrees out of phase with one another to generate I and Q modulated information signals **2930** and **2932**, respectively, which are combined by the signal combiner **2928**. The IF section(s) **2916** and RF section **2914** up-convert the combined I and Q modulated information signals **2930** and **2932** to RF for transmission by the antenna, in a manner well known in the relevant art(s).

[0333] Heterodyne implementations, such as those illustrated in **FIGS. 28 and 29**, are expensive and difficult to design, manufacture and tune. In accordance with the present invention, therefore, the interface **2714 (FIG. 27)** is preferably implemented with one or more universal frequency translation (UFT) modules, such as the UFT module **102 (FIG. 1A)**. Thus previously described benefits of the present invention are obtained in wireless modems, WLANs, etc.

[0334] **FIG. 30** illustrates an example block diagram embodiment of the interface **2714** that is associated with a computer or any other data processing and/or communications device. In **FIG. 30**, the receiver module **2718** includes a universal frequency down-converter (UFD) module **3014** and an optional analog to digital (A/D) converter **3016**, which converts an analog output from the UFD **3014** to a digital format for the DSP **2720**. The transmitter module **2716** includes an optional modulator **3012** and a universal frequency up-converter (UFU) module **3010**. The optional modulator **3012** can be a variety of types of modulators, including conventional modulators. Alternatively, the UFU module **3010** includes modulator functionality. The example implementation of **FIG. 30** operates substantially as described above and in co-pending U.S. Patent Applications titled, "Method and System for Down-Converting Electromagnetic Signals," Ser. No. 09/176,022, filed Oct. 21, 1998, issued as U.S. Pat. No. 6,061,551 on May 9, 2000, and "Method and System for Frequency Up-Conversion," Ser. No. 09/176,154, filed Oct. 21, 1998, issued as U.S. Pat. No. 6,091,940 on Jul. 18, 2000, as well as other cited documents.

[0335] **FIG. 31** illustrates an example implementation of the interface **2714** illustrated in **FIG. 30**, wherein the receiver UFD **3014** includes a UFT module **3112**, and the

transmitter UFU **3010** includes a universal frequency translation (UFT) module **3110**. This example implementation operates substantially as described above and in co-pending U.S. Patent Applications titled, "Method and System for Down-Converting Electromagnetic Signals," Ser. No. 09/176,022, filed Oct. 21, 1998, issued as U.S. Pat. No. 6,061,551 on May 9, 2000, and "Method and System for Frequency Up-Conversion," Ser. No. 09/176,154, filed Oct. 21, 1998, "Method and System for Frequency Up-Conversion," Ser. No. 09/176,154, filed Oct. 21, 1998, issued as U.S. Pat. No. 6,091,940 on Jul. 18, 2000, as well as other cited documents.

[**0336**] **FIG. 32** illustrates an example I/Q implementation of the interface module **2710**. Other I/Q implementations are also contemplated and are within the scope of the present invention.

[**0337**] In the example of **FIG. 32**, the receiver UFD module **3014** includes a signal divider **3228** that provides a received I/Q modulated carrier signal **3230** between a third UFT module **3224** and a fourth UFT module **3226**. A phase shifter **3232**, illustrated here as a 90 degree phase shifter, controls the third and fourth UFT modules **3224** and **3226** to operate 90 degrees out of phase with one another. As a result, the third and fourth UFT modules **3224** and **3226** down-convert and demodulate the received I/Q modulated carrier signal **3230**, and output I and Q channels **3234** and **3236**, respectively, which are provided to the DSP **2720** through the optional A/D converter **3016**.

[**0338**] In the example of **FIG. 32**, the transmitter UFU module **3010** includes first and second UFT modules **3212** and **3214** and a phase shifter **3210**, which is illustrated here as a 90 degree phase shifter. The phase shifter **3210** receives a lower frequency modulated carrier signal **3238** from the modulator **3012**. The phase shifter **3210** controls the first and second UFT modules **3212** and **3214** to operate 90 degrees out of phase with one another. The first and second UFT modules **3212** and **3214** up-convert the lower frequency modulated carrier signal **3238**, which are output as higher frequency modulated I and Q carrier channels **3218** and **3220**, respectively. A signal combiner **3216** combines the higher frequency modulated I and Q carrier channels **3218** and **3220** into a single higher frequency modulated I/Q carrier signal **3222** for transmitting by the antenna **2712**.

[**0339**] The example implementations of the interfaces described above, and variations thereof, can also be used to implement network interfaces, such as the network interface **2520** illustrated in **FIG. 25**.

[**0340**] 6.1.2. Example Modifications

[**0341**] The RF modem applications, WLAN applications, etc., described herein, can be modified by incorporating one or more of the enhanced signal reception (ESR) techniques described herein. Use of ESR embodiments with the network embodiments described herein will be apparent to persons skilled in the relevant art(s) based on the teachings contained herein.

[**0342**] The RF modem applications, WLAN applications, etc., described herein can be enhanced by incorporating one or more of the unified down-conversion and filtering (UDF) techniques described herein. Use of UDF embodiments with the network embodiments described herein will be apparent to persons skilled in the relevant art(s) based on the teachings contained herein.

[**0343**] 6.2. Other Example Applications

[**0344**] The application embodiments described above are provided for purposes of illustration. These applications and embodiments are not intended to limit the invention. Alternate and additional applications and embodiments, differing slightly or substantially from those described herein, will be apparent to persons skilled in the relevant art(s) based on the teachings contained herein. For example, such alternate and additional applications and embodiments include combinations of those described above. Such combinations will be apparent to persons skilled in the relevant art(s) based on the herein teachings.

[**0345**] 7.0. Example WLAN Implementation Embodiments

[**0346**] 7.1 Architecture

[**0347**] **FIG. 39** is a block diagram of a WLAN interface **3902** (also referred to as a WLAN modem herein) according to an embodiment of the invention. The WLAN interface/modem **3902** includes an antenna **3904**, a low noise amplifier or power amplifier (LNA/PA) **3904**, a receiver **3906**, a transmitter **3910**, a control signal generator **3908**, a demodulator/modulator facilitation module **3912**, and a media access controller (MAC) interface **3914**. Other embodiments may include different elements. The MAC interface **3914** couples the WLAN interface/modem **3902** to a computer **3916** or other data processing device. The computer **3916** preferably includes a MAC **3918**.

[**0348**] The WLAN interface/modem **3902** represents a transmit and receive application that utilizes the universal frequency translation technology described herein. It also represents a zero IF (or direct-to-data) WLAN architecture.

[**0349**] The WLAN interface/modem **3902** also represents a vector modulator and a vector demodulator using the universal frequency translation (UFT) technology described herein. Use of the UFT technology enhances the flexibility of the WLAN application (i.e., makes it universal).

[**0350**] In the embodiment shown in **FIG. 39**, the WLAN interface/modem **3902** is compliant with WLAN standard IEEE 802.11. However, the invention is not limited to this standard. The invention is applicable to any communication standard or specification, as will be appreciated by persons skilled in the relevant art(s) based on the teachings contained herein. Any modifications to the invention to operate with other standards or specifications will be apparent to persons skilled in the relevant art(s) based on the teachings contained herein.

[**0351**] In the embodiment shown in **FIG. 39**, the WLAN interface/modem **3902** provides half duplex communication. However, the invention is not limited to this communication mode. The invention is applicable and directed to other communication modes, as will be appreciated by persons skilled in the relevant art(s) based on the teachings contained herein.

[**0352**] In the embodiment shown in **FIG. 39**, the modulation/demodulation performed by the WLAN interface/modem **3902** is preferably direct sequence spread spectrum QPSK (quadrature phase shift keying) with differential encoding. However, the invention is not limited to this modulation/demodulation mode. The invention is applicable and directed to other modulation and demodulation modes,

such as but not limited to those described herein, as well as frequency hopping according to IEEE 802.11, OFDM (orthogonal frequency division multiplexing), as well as others. These modulation/demodulation modes will be appreciated by persons skilled in the relevant art(s) based on the teachings contained herein.

[**0353**] The operation of the WLAN interface/modem **3902** when receiving shall now be described.

[**0354**] Signals **3922** received by the antenna **3903** are amplified by the LNA/PA **3904**. The amplified signals **3924** are down-converted and demodulated by the receiver **3906**. The receiver **3906** outputs I signal **3926** and Q signal **3928**.

[**0355**] **FIG. 40** illustrates an example receiver **3906** according to an embodiment of the invention. It is noted that the receiver **3906** shown in **FIG. 40** represents a vector modulator. The "receiving" function performed by the WLAN interface/modem **3902** can be considered to be all processing performed by the WLAN interface/modem **3902** from the LNA/PA **3904** to generation of baseband information.

[**0356**] Signal **3924** is split by a 90 degree splitter **4001** to produce an I signal **4006**A and Q signal **4006**B that are preferably 90 degrees apart in phase. I and Q signals **4006**A, **4006**B are down-converted by UFD (universal frequency down-conversion) modules **4002**A, **4002**B. The UDF modules **4002**A, **4002**B output down-converted I and Q signals **3926**, **3928**. The UFD modules **4002**A, **4002**B each includes at least one-UFT (universal frequency translation) module **4004**A. UFD and UFT modules are described above. An example implementation of the receiver **3906** (vector demodulator) is shown in **FIG. 53**. An example BOM list for the receiver **3906** of **FIG. 53** is shown in **FIG. 54**.

[**0357**] The demodulator/modulator facilitation module **3912** receives the I and Q signals **3926**, **3928**. The demodulator/modulator facilitation module **3912** amplifies and filters the I and Q signals **3926**, **3928**. The demodulator/modulator facilitation module **3912** also performs automatic gain control (AGC) functions. The AGC function is coupled with the universal frequency translation technology described herein. The demodulator/modulator facilitation module **3912** outputs processed I and Q signals **3930**, **3932**.

[**0358**] The MAC interface **3914** receives the processed I and Q signals **3930**, **3932**. The MAC interface **3914** preferably includes a baseband processor. The MAC interface **3914** preferably performs functions such as combining the I and Q signals **3930**, **3932**, and arranging the data according to the protocol/file formal being used. Other functions performed by the MAC interface **3914** and the baseband processor contained therein will be apparent to persons skilled in the relevant art(s) based on the teachings contained herein. The MAC interface **3914** outputs the baseband information signal, which is received and processed by the computer **3916** in an implementation and application specific manner.

[**0359**] In the example embodiment of **FIG. 39**, the demodulation function is distributed among the receiver **3906**, the demodulator/modulator facilitation module **3912**, and a baseband processor contained in the MAC interface **3914**. The functions collectively performed by these components include, but are not limited to, despreading the information, differentially decoding the information, tracking the carrier phase, descrambling, recreating the data clock, and combining the I and Q signals. The invention is not limited to this arrangement. These demodulation-type functions can be centralized in a single component, or distributed in other ways.

[**0360**] The operation of the WLAN interface/modem **3902** when transmitting shall now be described.

[**0361**] A baseband information signal **3936** is received by the MAC interface **3914** from the computer **3916**. The MAC interface **3914** preferably performs functions such as splitting the baseband information signal to form I and Q signals **3930**, **3932**, and arranging the data according to the protocol/file formal being used. Other functions performed by the MAC interface **3914** and the baseband processor contained therein will be apparent to persons skilled in the relevant art(s) based on the teachings contained herein.

[**0362**] The demodulator/modulator facilitation module **3912** filters and amplifies the I and Q signals **3930**, **3932**. The demodulator/modulator facilitation module **3912** outputs processed I and Q signals **3942**, **3944**. Preferably, at least some filtering and/or amplifying components in the demodulator/modulator facilitation module **3912** are used for both the transmit and receive paths.

[**0363**] The transmitter **3910** up-converts the processed I and Q signals **3942**, **3944**, and combines the up-converted I and Q signals. This up-converted/combined signal is amplified by the LNA/PA **3904**, and then transmitted via the antenna **3904**.

[**0364**] **FIG. 41** illustrates an example transmitter **3910** according to an embodiment of the invention. The device in **FIG. 41** can also be called a vector modulator. In an embodiment, the "transmit" function performed by the WLAN interface/modem **3902** can be considered to be all processing performed by the WLAN interface/modem **3902** from receipt of baseband information through the LNA/PA **3904**. An example implementation of the transmitter **3910** (vector modulator) is shown in **FIGS. 57-60**. The data conditioning interfaces **5802** in **FIG. 58** effectively preprocess the I and Q signals **3942**, **3944** before being received by the UFU modules **4102**. An example BOM list for the transmitter **3910** of **FIGS. 57-60** is shown in **FIGS. 61A and 61B**.

[**0365**] I and Q signals **3942**, **3944** are received by UFU (universal frequency up-conversion) modules **4102**A, **4102**B. The UFU modules **4102**A, **4102**B each includes at least one UFT module **4104**A, **4104**B. The UFU modules **4102**A, **4102**B up-convert I and Q signals **3942**, **3944**. The UFU modules **4102**A, **4102**B output up-converted I and Q signals **4106**, **4108**. The 90 degree combiner **4110** effectively phase shifts either the I signal **4106** or the Q signal **4108** by 90 degrees, and then combines the phase shifted signal with the unshifted signal to generate a combined, up-converted I/Q signal **3946**.

[**0366**] In the example embodiment of **FIG. 39**, the modulation function is distributed among the transmitter **3910**, the demodulator/modulator facilitation module **3912**, and a baseband processor contained in the MAC interface **3914**. The functions collectively performed by these components include, but are not limited to, differentially encoding data, splitting the baseband information signal into I and Q signals, scrambling data, and data spreading. The invention

is not limited to this arrangement. These modulation-type functions can be centralized in a single component, or distributed in other ways.

[0367] An example implementation of the transmitter **3910** (vector modulator) is shown in **FIGS. 57-60**. The data conditioning interfaces **5802** in **FIG. 0.58** effectively pre-process the I and Q signals **3942**, **3944** before being received by the UFU modules **4102**. An example BOM list for the transmitter **3910** of **FIGS. 57-60** is shown in **FIGS. 61A and 61B**.

[0368] The components in the WLAN interface/modem **3902** are preferably controlled by the MAC interface **3914** in operation with the MAC **3918** in the computer **3916**. This is represented by the distributed control arrow **3940** in **FIG. 39**. Such control includes setting the frequency, data rate, whether receiving or transmitting, and other communication characteristics/modes that will be apparent to persons skilled in the relevant art(s) based on the teachings contained herein. In embodiments, control signals are sent over the corresponding wireless medium and received by the antenna **3904**, and sent to the MAC **3918**.

[0369] **FIG. 42** illustrates an example implementation of the WLAN interface/modem **3902**. It is noted that in this implementation example, the MAC interface **3914** is located on a different board. **FIG. 62** is an example motherboard corresponding to **FIG. 42**. FIG. **63** is an example bill-of-materials (BOM) list for the motherboard of **FIG. 62**. This and other implementations are provided herein for example purposes only. Other implementations will be apparent to persons skilled in the relevant art(s), and the invention is directed to such other implementations.

[0370] **FIG. 102** illustrates an alternate example PCMCIA test bed assembly for a WLAN interface/modem **3902** according to an embodiment of the invention. In this embodiment, the baseband processor **10202** is separate from the MAC interface **3914**.

[0371] In some applications, it is desired to separate the receive path and the transmit path. **FIG. 43** illustrates an example receive implementation, and **FIG. 44** illustrates an example transmit implementation.

[0372] 7.2 Receiver

[0373] Example embodiments and implementations of the IQ receiver **3906** will be discussed as follows. The example embodiments and implementations include multi-phase embodiments that are useful for reducing or eliminating unwanted DC offsets and circuit re-radiation. The invention is not limited to these example receiver embodiments. Other receiver embodiments will be understood by those skilled in the relevant arts based on the discussion given herein. These other embodiments are within the scope and spirit of the present invention.

[0374] 7.2.1 IQ Receiver

[0375] An example embodiment of the receiver **3906** is shown in **FIG. 67A**. Referring to **FIG. 67A**, the UFD module **4002**A (**FIG. 40**) is configured so that the UFT module **4004**A is coupled to a storage module **6704**A. The UFT module **4004**A is a controlled switch **6702**A that is controlled by the control signal **3920**A. The storage module **6704**A is a capacitor **6706**A. However, other storage modules could be used including an inductor, as will be understood by those skilled in the relevant arts. Likewise, the UFD module **4002**B (**FIG. 40**) is configured so that the UFT module **4004**B is coupled to a storage module **6704**B. The UFT module **4004**B is a controlled switch **6702**B that is controlled by the control signal **3920**B. The storage module **6704**B is a capacitor **6706**B. However, other storage modules could be used including an inductor, as will be understood by those skilled in the relevant arts. The operation of the receiver **3906** is discussed as follows.

[0376] The 90 degree splitter **4001** receives the received signal **3924** from the LNA/PA module **3904**. The 90 degree splitter **4001** divides the signal **3924** into an I signal **4006**A and a Q signal **4006**B.

[0377] The UFD module **4002**A receives the I signal **4006**A and down-converts the I signal **4006**A using the control signal **3920**A to a lower frequency signal **13926**. More specifically, the controlled switch **6702**A samples the I signal **4006**A according to the control signal **3920**A, transferring charge (or energy) to the storage module **6704**A. The charge stored during successive samples of the I signal **4006**A, results in the down-converted signal I signal **3926**. Likewise, UFD module **4002**B receives the Q signal **4006**B and down-converts the Q signal **4006**B using the control signal **3920**B to a lower frequency signal Q **3928**. More specifically, the controlled switch **6702**B samples the Q signal **4006**B according to the control signal **3920**B, resulting in charge (or energy) that is stored in the storage module **6704**B. The charge stored during successive samples of the I signal **4006**A, results in the down-converted signal Q signal **3928**.

[0378] Down-conversion utilizing a UFD module (also called an aliasing module) is further described in the above referenced applications, such as "Method and System for Down-converting Electromagnetic Signals," Ser. No. 09/176,022, now U.S. Pat. No. 6,061,551. As discussed in the '551 patent, the control signals **3920**A,B can be configured as a plurality of pulses that are established to improve energy transfer from the signals **4006**A,B to the down-converted signals **3926** and **3928**, respectively. In other words, the pulse widths of the control signals **3920** can be adjusted to increase and/or optimize the energy transfer from the signals **4006** to the down-converted output signals **3926** and **3938**, respectively. Additionally, matched filter principles can be implemented to shape the sampling pulses of the control signal **3920**, and therefore further improve energy transfer to the down-converted output signal **3106**. Matched filter principle and energy transfer are further described in the above referenced applications, such as U.S. patent application titled, "Method and System for Down-Converting an Electromagnetic Signal, Transforms For Same, and Aperture Relationships", Ser. No. 09/550,644, filed on Apr. 14, 2000.

[0379] The configuration of the UFT based receiver **3906** is flexible. In **FIG. 67A**, the controlled switches **6702** are in a series configuration relative to the signals **4006**. Alternatively, **FIG. 67B** illustrates the controlled switches **6702** in a shunt configuration so that the switches **6702** shunt the signals **4006** to ground.

[0380] Additionally in FIGS. **67**A-B, the 90 degree phase shift between the I and Q channels is realized with the 90 degree splitter **4001**. Alternatively, **FIG. 68A** illustrates a receiver **6806** in series configuration, where the 90 degree

phase shift is realized by shifting the control signal **3920**B by 90 degrees relative to the control signal **3920**A. More specifically, the 90 degree shifter **6804** is added to shift the control signal **3920**B by 90 degrees relative to the control signal **3920**A. As such, the splitter **6802** is an in-phase (i.e. 0 degree) signal splitter. **FIG. 68B** illustrates an embodiment of the receiver **3906** of the receiver **3906** in a shunt configuration with 90 degree delays on the control signal.

[**0381**] Furthermore, the configuration of the controlled switch **6702** is also flexible. More specifically, the controlled switches **6702** can be implemented in many different ways, including transistor switches. **FIG. 69A** illustrates the UFT modules **6702** in a series configuration and implemented as FETs **6902**, where the gate of each FET **6902** is controlled by the respective control signal **3920**. As such, the FET **6902** samples the respective signal **4006**, according to the respective control signal **3920**. **FIG. 69B** illustrates the shunt configuration.

[**0382**] 7.2.2 Multi-Phase IQ Receiver

[**0383**] **FIG. 70A** illustrates an exemplary I/Q modulation receiver **7000**, according to an embodiment of the present invention. I/Q modulation receiver **7000** has additional advantages of reducing or eliminating unwanted DC offsets and circuit re-radiation. As will be apparent, the IQ receiver **7000** can be described as a multi-phase receiver to those skilled in the arts.

[**0384**] I/Q modulation receiver **7000** comprises a first UFD module **7002**, a first optional filter **7004**, a second UFD module **7006**, a second optional filter **7008**, a third UFD module **7010**, a third optional filter **7012**, a fourth UFD module **7014**, a fourth filter **7016**, an optional LNA **7018**, a first differential amplifier **7020**, a second differential amplifier **7022**, and an antenna **7072**.

[**0385**] I/Q modulation receiver **7000** receives, down-converts, and demodulates a I/Q modulated RF input signal **7082** to an I baseband output signal **7084**, and a Q baseband output signal **7086**. I/Q modulated RF input signal **7082** comprises a first information signal and a second information signal that are I/Q modulated onto an RF carrier signal. I baseband output signal **7084** comprises the first baseband information signal. Q baseband output signal **7086** comprises the second baseband information signal.

[**0386**] Antenna **7072** receives I/Q modulated RF input signal **7082**. I/Q modulated RF input signal **7082** is output by antenna **7072** and received by optional LNA **7018**. When present, LNA **7018** amplifies I/Q modulated RF input signal **7082**, and outputs amplified I/Q signal **7088**.

[**0387**] First UFD module **7002** receives amplified I/Q signal **7088**. First UFD module **7002** down-converts the I-phase signal portion of amplified input I/Q signal **7088** according to an I control signal **7090**. First UFD module **7002** outputs an I output signal **7098**.

[**0388**] In an embodiment, first UFD module **7002** comprises a first storage module **7024**, a first UFT module **7026**, and a first voltage reference **7028**. In an embodiment, a switch contained within first UFT module **7026** opens and closes as a function of I control signal **7090**. As a result of the opening and closing of this switch, which respectively couples and de-couples first storage module **7024** to and from first voltage reference **7028**, a down-converted signal, referred to as I output signal **7098**, results. First voltage reference **7028** may be any reference voltage, and is preferably ground. I output signal **7098** is stored by first storage module **7024**.

[**0389**] In an embodiment, first storage module **7024** comprises a first capacitor **7074**. In addition to storing I output signal **7098**, first capacitor **7074** reduces or prevents a DC offset voltage resulting from charge injection from appearing on I output signal **7098**.

[**0390**] I output signal **7098** is received by optional first filter **7004**. When present, first filter **7004** is in some embodiments a high pass filter to at least filter I output signal **7098** to remove any carrier signal "bleed through". In a preferred embodiment, when present, first filter **7004** comprises a first resistor **7030**, a first filter capacitor **7032**, and a first filter voltage reference **7034**. Preferably, first resistor **7030** is coupled between I output signal **7098** and a filtered I output signal **7007**, and first filter capacitor **7032** is coupled between filtered I output signal **7007** and first filter voltage reference **7034**. Alternately, first filter **7004** may comprise any other applicable filter configuration as would be understood by persons skilled in the relevant art(s). First filter **7004** outputs filtered I output signal **7007**.

[**0391**] Second UFD module **7006** receives amplified I/Q signal **7088**. Second UFD module **7006** down-converts the inverted I-phase signal portion of amplified input I/Q signal **7088** according to an inverted I control signal **7092**. Second UFD module **7006** outputs an inverted I output signal **7001**.

[**0392**] In an embodiment, second UFD module **7006** comprises a second storage module **7036**, a second UFT module **7038**, and a second voltage reference **7040**. In an embodiment, a switch contained within second UFT module **7038** opens and closes as a function of inverted I control signal **7092**. As a result of the opening and closing of this switch, which respectively couples and de-couples second storage module **7036** to and from second voltage reference **7040**, a down-converted signal, referred to as inverted I output signal **7001**, results. Second voltage reference **7040** may be any reference voltage, and is preferably ground. Inverted I output signal **7001** is stored by second storage module **7036**.

[**0393**] In an embodiment, second storage module **7036** comprises a second capacitor **7076**. In addition to storing inverted I output signal **7001**, second capacitor **7076** reduces or prevents a DC offset voltage resulting from charge injection from appearing on inverted I output signal **7001**.

[**0394**] Inverted I output signal **7001** is received by optional second filter **7008**. When present, second filter **7008** is a high pass filter to at least filter inverted I output signal **7001** to remove any carrier signal "bleed through". In a preferred embodiment, when present, second filter **7008** comprises a second resistor **7042**, a second filter capacitor **7044**, and a second filter voltage reference **7046**. Preferably, second resistor **7042** is coupled between inverted I output signal **7001** and a filtered inverted I output signal **7009**, and second filter capacitor **7044** is coupled between filtered inverted I output signal **7009** and second filter voltage reference **7046**. Alternately, second filter **7008** may comprise any other applicable filter configuration as would be understood by persons skilled in the relevant art(s). Second filter **7008** outputs filtered inverted I output signal **7009**.

[0395] First differential amplifier **7020** receives filtered I output signal **7007** at its non-inverting input and receives filtered inverted I output signal **7009** at its inverting input. First differential amplifier **7020** subtracts filtered inverted I output signal **7009** from filtered I output signal **7007**, amplifies the result, and outputs I baseband output signal **7084**. Because filtered inverted I output signal **7009** is substantially equal to an inverted version of filtered I output signal **7007**, I baseband output signal **7084** is substantially equal to filtered I output signal **7009**, with its amplitude doubled. Furthermore, filtered I output signal **7007** and filtered inverted I output signal **7009** may comprise substantially equal noise and DC offset contributions from prior down-conversion circuitry, including first UFD module **7002** and second UFD module **7006**, respectively. When first differential amplifier **7020** subtracts filtered inverted I output signal **7009** from filtered I output signal **7007**, these noise and DC offset contributions substantially cancel each other.

[0396] Third UFD module **7010** receives amplified I/Q signal **7088**. Third UFD module **7010** down-converts the Q-phase signal portion of amplified input I/Q signal **7088** according to an Q control signal **7094**. Third UFD module **7010** outputs an Q output signal **7003**.

[0397] In an embodiment, third UFD module **7010** comprises a third storage module **7048**, a third UFT module **7050**, and a third voltage reference **7052**. In an embodiment, a switch contained within third UFT module **7050** opens and closes as a function of Q control signal **7094**. As a result of the opening and closing of this switch, which respectively couples and de-couples third storage module **7048** to and from third voltage reference **7052**, a down-converted signal, referred to as Q output signal **7003**, results. Third voltage reference **7052** may be any reference voltage, and is preferably ground. Q output signal **7003** is stored by third storage module **7048**.

[0398] In an embodiment, third storage module **7048** comprises a third capacitor **7078**. In addition to storing Q output signal **7003**, third capacitor **7078** reduces or prevents a DC offset voltage resulting from charge injection from appearing on Q output signal **7003**.

[0399] Q output signal **7003** is received by optional third filter **7012**. When present, in an embodiment, third filter **7012** is a high pass filter to at least filter Q output signal **7003** to remove any carrier signal "bleed through". In an embodiment, when present, third filter **7012** comprises a third resistor **7054**, a third filter capacitor **7056**, and a third filter voltage reference **7058**. Preferably, third resistor **7054** is coupled between Q output signal **7003** and a filtered Q output signal **7011**, and third filter capacitor **7056** is coupled between filtered Q output signal **7011** and third filter voltage reference **7058**. Alternately, third filter **7012** may comprise any other applicable filter configuration as would be understood by persons skilled in the relevant art(s). Third filter **7012** outputs fltered Q output signal **7011**.

[0400] Fourth UFD module **7014** receives amplified I/Q signal **7088**. Fourth UFD module **7014** down-converts the inverted Q-phase signal portion of amplified input I/Q signal **7088** according to an inverted Q control signal **7096**. Fourth UFD module **7014** outputs an inverted Q output signal **7005**.

[0401] In an embodiment, fourth UFD module **7014** comprises a fourth storage module **7060**, a fourth UFT module **7062**, and a fourth voltage reference **7064**. In an embodiment, a switch contained within fourth UFT module **7062** opens and closes as a function of inverted Q control signal **7096**. As a result of the opening and closing of this switch, which respectively couples and de-couples fourth storage module **7060** to and from fourth voltage reference **7064**, a down-converted signal, referred to as inverted Q output signal **7005**, results. Fourth voltage reference **7064** may be any reference voltage, and is preferably ground. Inverted Q output signal **7005** is stored by fourth storage module **7060**.

[0402] In an embodiment, fourth storage module **7060** comprises a fourth capacitor **7080**. In addition to storing inverted Q output signal **7005**, fourth capacitor **7080** reduces or prevents a DC offset voltage resulting from charge injection from appearing on inverted Q output signal **7005**.

[0403] Inverted Q output signal **7005** is received by optional fourth filter **7016**. When present, fourth filter **7016** is a high pass filter to at least filter inverted Q output signal **7005** to remove any carrier signal "bleed through". In a preferred embodiment, when present, fourth filter **7016** comprises a fourth resistor **7066**, a fourth filter capacitor **7068**, and a fourth filter voltage reference **7070**. Preferably, fourth resistor **7066** is coupled between inverted Q output signal **7005** and a filtered inverted Q output signal **7013**, and fourth filter capacitor **7068** is coupled between filtered inverted Q output signal **7013** and fourth filter voltage reference **7070**. Alternately, fourth filter **7016** may comprise any other applicable filter configuration as would be understood by persons skilled in the relevant art(s). Fourth filter **7016** outputs filtered inverted Q output signal **7013**.

[0404] Second differential amplifier **7022** receives filtered Q output signal **7011** at its non-inverting input and receives filtered inverted Q output signal **7013** at its inverting input. Second differential amplifier **7022** subtracts filtered inverted Q output signal **7013** from filtered Q output signal **7011**, amplifies the result, and outputs Q baseband output signal **7086**. Because filtered inverted Q output signal **7013** is substantially equal to an inverted version of filtered Q output signal **7011**, Q baseband output signal **7086** is substantially equal to filtered Q output signal **7013**, with its amplitude doubled. Furthermore, filtered Q output signal **7011** and filtered inverted. Q output signal **7013** may comprise substantially equal noise and DC offset contributions of the same polarity from prior down-conversion circuitry, including third UFD module **7010** and fourth UFD module **7014**, respectively. When second differential amplifier **7022** subtracts filtered inverted Q output signal **7013** from filtered Q output signal **7011**, these noise and DC offset contributions substantially cancel each other.

[0405] Additional embodiments relating to addressing DC offset and re-radiation concerns, applicable to the present invention, are described in co-pending patent application Ser. No. 09/526,041,entitled "DC Offset, Re-radiation, and I/Q Solutions Using Universal Frequency Translation Technology," Attorney Docket No. 1744.0880000, which is herein incorporated by reference in its entirety.

[0406] 7.2.2.1 Example I/Q Modulation Control Signal Generator Embodiments

[0407] **FIG. 70B** illustrates an exemplary block diagram for I/Q modulation control signal generator **7023**, according to an embodiment of the present invention. I/Q modulation

control signal generator **7023** generates I control signal **7090**, inverted I control signal **7092**, Q control signal **7094**, and inverted Q control signal **7096** used by I/Q modulation receiver **7000** of **FIG. 70A**. I control signal **7090** and inverted I control signal **7092** operate to down-convert the I-phase portion of an input I/Q modulated RF signal. Q control signal **7094** and inverted Q control signal **7096** act to down-convert the Q-phase portion of the input I/Q modulated RF signal. Furthermore, I/Q modulation control signal generator **7023** has the advantage of generating control signals in a manner such that resulting collective circuit re-radiation is radiated at one or more frequencies outside of the frequency range of interest. For instance, potential circuit re-radiation is radiated at a frequency substantially greater than that of the input RF carrier signal frequency.

[**0408**] I/Q modulation control signal generator **7023** comprises a local oscillator **7025**, a first divide-by-two module **7027**, a 180 degree phase shifter **7029**, a second divide-by-two module **7031**, a first pulse generator **7033**, a second pulse generator **7035**, a third pulse generator **7037**, and a fourth pulse generator **7039**.

[**0409**] Local oscillator **7025** outputs an oscillating signal **7015**. **FIG. 70C** shows an exemplary oscillating signal **7015**.

[**0410**] First divide-by-two module **7027** receives oscillating signal **7015**, divides oscillating signal **7015** by two, and outputs a half frequency LO signal **7017** and a half frequency inverted LO signal **7041**. **FIG. 70C** shows an exemplary half frequency LO signal **7017**. Half frequency inverted LO signal **7041** is an inverted version of half frequency LO signal **7017**. First divide-by-two module **7027** may be implemented in circuit logic, hardware, software, or any combination thereof, as would be known by persons skilled in the relevant art(s).

[**0411**] 180 degree phase shifter **7029** receives oscillating signal **7015**, shifts the phase of oscillating signal **7015** by 180 degrees, and outputs phase shifted LO signal **7019**. 180 degree phase shifter **7029** may be implemented in circuit logic, hardware, software, or any combination thereof, as would be known by persons skilled in the relevant art(s). In alternative embodiments, other amounts of phase shift may be used.

[**0412**] Second divide-by two module **7031** receives phase shifted LO signal **7019**, divides phase shifted LO signal **7019** by two, and outputs a half frequency phase shifted LO signal **7021** and a half frequency inverted phase shifted LO signal **7043**. **FIG. 70C** shows an exemplary half frequency phase shifted LO signal **7021**. Half frequency inverted phase shifted LO signal **7043** is an inverted version of half frequency phase shifted LO signal **7021**. Second divide-by-two module **7031** may be implemented in circuit logic, hardware, software, or any combination thereof, as would be known by persons skilled in the relevant art(s).

[**0413**] First pulse generator **7033** receives half frequency LO signal **7017**, generates an output pulse whenever a rising edge is received on half frequency LO signal **7017**, and outputs I control signal **7090**. **FIG. 70C** shows an exemplary I control signal **7090**.

[**0414**] Second pulse generator **7035** receives half frequency inverted LO signal **7041**, generates an output pulse whenever a rising edge is received on half frequency inverted LO signal **7041**, and outputs inverted I control signal **7092**. **FIG. 70C** shows an exemplary inverted I control signal **7092**.

[**0415**] Third pulse generator **7037** receives half frequency phase shifted LO signal **7021**, generates an output pulse whenever a rising edge is received on half frequency phase shifted LO signal **7021**, and outputs Q control signal **7094**. **FIG. 70C** shows an exemplary Q control signal **7094**.

[**0416**] Fourth pulse generator **7039** receives half frequency inverted phase shifted LO signal **7043**, generates an output pulse whenever a rising edge is received on half frequency inverted phase shifted LO signal **7043**, and outputs inverted Q control signal **7096**. **FIG. 70C** shows an exemplary inverted Q control signal **7096**.

[**0417**] In an embodiment, control signals **7090**, **7021**, **7041** and **7043** include pulses having a width equal to one-half of a period of I/Q modulated RF input signal **7082**. The invention, however, is not limited to these pulse widths, and control signals **7090**, **7021**, **7041**, and **7043** may comprise pulse widths of any fraction of, or multiple and fraction of, a period of I/Q modulated RF input signal **7082**.

[**0418**] First, second, third, and fourth pulse generators **7033**, **7035**, **7037**, and **7039** may be implemented in circuit logic, hardware, software, or any combination thereof, as would be known by persons skilled in the relevant art(s).

[**0419**] As shown in **FIG. 70C**, in an embodiment, control signals **7090**, **7021**, **7041**, and **7043** comprise pulses that are non-overlapping in other embodiments the pulses may overlap. Furthermore, in this example, pulses appear on these signals in the following order: I control signal **7090**, Q control signal **7094**, inverted I control signal **7092**, and inverted Q control signal **7096**. Potential circuit re-radiation from I/Q modulation receiver **7000** may comprise frequency components from a combination of these control signals.

[**0420**] For example, **FIG. 70D** shows an overlay of pulses from 1 control signal **7090**, Q control signal **7094**, inverted I control signal **7092**, and inverted Q control signal **7096**. When pulses from these control signals leak through first, second, third, and/or fourth UFD modules **7002**, **7006**, **7010**, and **7014** to antenna **7072** (shown in **FIG. 70A**), they may be radiated from I/Q modulation receiver **7000**, with a combined waveform that appears to have a primary frequency equal to four times the frequency of any single one of control signals **7090**, **7021**, **7041**, and **7043**. **FIG. 70** shows an example combined control signal **7045**.

[**0421**] **FIG. 70D** also shows an example I/Q modulation RF input signal **7082** overlaid upon control signals **7090**, **7094**, **7092**, and **7096**. As shown in **FIG. 70D**, pulses on I control signal **7090** overlay and act to down-convert a positive I-phase portion of I/Q modulation RF input signal **7082**. Pulses on inverted I control signal **7092** overlay and act to down-convert a negative I-phase portion of I/Q modulation RF input signal **7082**. Pulses on Q control signal **7094** overlay and act to down-convert a rising Q-phase portion of I/Q modulation RF input signal **7082**. Pulses on inverted Q control signal **7096** overlay and act to down-convert a falling Q-phase portion of I/Q modulation RF input signal **7082**.

[**0422**] As **FIG. 70D** further shows in this example, the frequency ratio between the combination of control signals

7090, **7021**, **7041**, and **7043** and I/Q modulation RF input signal **7082** is approximately 4:3. Because the frequency of the potentially re-radiated signal, i.e., combined control signal **7045**, is substantially different from that of the signal being down-converted, i.e., I/Q modulation RF input signal **7082**, it does not interfere with signal down-conversion as it is out of the frequency band of interest, and hence may be filtered out. In this manner, I/Q modulation receiver **7000** reduces problems due to circuit re-radiation. As will be understood by persons skilled in the relevant art(s) from the teachings herein, frequency ratios other than 4:3 may be implemented to achieve similar reduction of problems of circuit re-radiation.

[**0423**] It should be understood that the above control signal generator circuit example is provided for illustrative purposes only. The invention is not limited to these embodiments. Alternative embodiments (including equivalents, extensions, variations, deviations, etc., of the embodiments described herein) for I/Q modulation control signal generator **7023** will be apparent to persons skilled in the relevant art(s) from the teachings herein, and are within the scope of the present invention.

[**0424**] **FIG. 70S** illustrates the receiver **7000**, where the UFT modules **7028**, **7038**, **7050**, and **7062** are configured with FETs **7099***a-d*.

[**0425**] Additional embodiments relating to addressing DC offset and re-radiation concerns, applicable to the present invention, are described in co-pending patent application Ser. No. 09/526,041, entitled "DC Offset, Re-radiation, and I/Q Solutions Using Universal Frequency Translation Technology," which is herein incorporated by reference in its entirety.

[**0426**] 7.2.2.2 Implementation of Multi-Phase I/Q Modulation Receiver Embodiment with Exemplary Waveforms

[**0427**] **FIG. 70E** illustrates a more detailed example circuit implementation of I/Q modulation receiver **7000**, according to an embodiment of the present invention. FIGS. **70**F-P show example waveforms related to an example implementation of I/Q modulation receiver **7000** of **FIG. 70E**.

[**0428**] **FIGS. 70F and 70G** show first and second input data signals **7047** and **7049** to be I/Q modulated with a RF carrier signal frequency as the I-phase and Q-phase information signals, respectively.

[**0429**] **FIGS. 70I and 70J** show the signals of **FIGS. 70F and 70G** after modulation with a RF carrier signal frequency, respectively, as I-modulated signal **7051** and Q-modulated signal **7053**.

[**0430**] **FIG. 70H** shows an I/Q modulation RF input signal **7082** formed from I-modulated signal **7051** and Q-modulated signal **7053** of **FIGS. 70I and 70J**, respectively.

[**0431**] **FIG. 70O** shows an overlaid view of filtered I output signal **7007** and filtered inverted I output signal **7009**.

[**0432**] **FIG. 70P** shows an overlaid view of filtered Q output signal **7011** and filtered inverted Q output signal **7013**.

[**0433**] **FIGS. 70K and 70L** show I baseband output signal **7084** and Q baseband output signal **7086**, respectfully. A data transition **7055** is indicated in both I baseband output signal **7084** and Q baseband output signal **7086**. The corresponding data transition **7055** is indicated in I-modulated signal **7051** of **FIG. 70I**, Q-modulated signal **7053** of **FIG. 70J**, and I/Q modulation RF input signal **7082** of **FIG. 70H**.

[**0434**] **FIGS. 70M and 70N** show I baseband output signal **7084** and Q baseband output signal **7086** over a wider time interval.

[**0435**] 7.2.2.3 Example Single Channel Receiver Embodiment

[**0436**] **FIG. 70Q** illustrates an example single channel receiver **7091**, corresponding to either the I or Q channel of I/Q modulation receiver **7000**, according to an embodiment of the present invention. Single channel receiver **7091** can down-convert an input RF signal **7097** modulated according to AM, PM, FM, and other modulation schemes. Refer to section 7.2.1 above for further description on the operation of single channel receiver **7091**. In other words, the single channel receiver **7091** is a one channel of the IQ receiver **7000** that was discussed in section 7.2.1.

[**0437**] 72.2.4 Alternative Example I/Q Modulation Receiver Embodiment

[**0438**] **FIG. 70R** illustrates an exemplary I/Q modulation receiver **7089**, according to an embodiment of the present invention. I/Q modulation receiver **7089** receives, down-converts, and demodulates an I/Q modulated RF input signal **7082** to an I baseband output signal **7084**, and a Q baseband output signal **7086**. I/Q modulation receiver **7089** has additional advantages of reducing or eliminating unwanted DC offsets and circuit re-radiation, in a similar fashion to that of I/Q modulation receiver **7000** described above.

[**0439**] 7.3 Transmitter

[**0440**] Example embodiments and implementations of the IQ transmitter **3910** will be discussed as follows. The example embodiments and implementations include multi-phase embodiments that are useful for reducing or eliminating unwanted DC offsets that can result in unwanted carrier insertion.

[**0441**] 7.3.1 Universal Transmitter with 2 UFT Modules

[**0442**] **FIG. 71A** illustrates a transmitter **7102** according to embodiments of the present invention. Transmitter **7102** includes a balanced modulator/up-converter **7104**, a control signal generator **7142**, an optional filter **7106**, and an optional amplifier **7108**. Transmitter **7102** up-converts a baseband signal **7110** to produce an output signal **7140** that is conditioned for wireless or wire line transmission. In doing so, the balanced modulator **7104** receives the baseband signal **7110** and samples the baseband signal in a differential and balanced fashion to generate a harmonically rich signal **7138**. The harmonically rich signal **7138** includes multiple harmonic images, where each image contains the baseband information in the baseband signal **7110**. The optional bandpass filter **7106** may be included to select a harmonic of interest (or a subset of harmonics) in the signal **7138** for transmission. The optional amplifier **7108** may be included to amplify the selected harmonic prior to transmission. The universal transmitter is further described at a high level by the flowchart **8400** that is shown in **FIG. 84**. A more detailed structural and operational description of the balanced modulator follows thereafter.

[0443] Referring to flowchart **8400**, in step **8402**, the balanced modulator **7104** receives the baseband signal **7110**.

[0444] In step **8404**, the balanced modulator **7104** samples the baseband signal in a differential and balanced fashion according to a first and second control signals that are phase shifted with respect to each other. The resulting harmonically rich signal **7138** includes multiple harmonic images that repeat at harmonics of the sampling frequency, where each image contains the necessary amplitude and frequency information to reconstruct the baseband signal **7110**.

[0445] In embodiments of the invention, the control signals include pulses having pulse widths (or apertures) that are established to improve energy transfer to a desired harmonic of the harmonically rich signal **7138**. In further embodiments of the invention, DC offset voltages are minimized between sampling modules as indicated in step **8406**, thereby minimizing carrier insertion in the harmonic images of the harmonically rich signal **7138**.

[0446] In step **8408**, the optional bandpass filter **7106** selects the desired harmonic of interest (or a subset of harmonics) in from the harmonically rich signal **7138** for transmission.

[0447] In step **8410**, the optional amplifier **7108** amplifies the selected harmonic(s) prior to transmission.

[0448] In step **8412**, the selected harmonic(s) is transmitted over a communications medium.

[0449] 7.3.1.1 Balanced Modulator Detailed Description

[0450] Referring to the example embodiment shown in **FIG. 71A**, the balanced modulator **7104** includes the following components: a buffer/inverter **7112**; summer amplifiers **7118**, **7119**; UFT modules **7124** and **7128** having controlled switches **7148** and **7150**, respectively; an inductor **7126**; a blocking capacitor **7136**; and a DC terminal **7111**. As stated above, the balanced modulator **7104** differentially samples the baseband signal **7110** to generate a harmonically rich signal **7138**. More specifically, the UFT modules **7124** and **7128** sample the baseband signal in differential fashion according to control signals **7123** and **7127**, respectively. A DC reference voltage **7113** is applied to terminal **7111** and is uniformly distributed to the UFT modules **7124** and **7128**. The distributed DC voltage **7113** prevents any DC offset voltages from developing between the UFT modules, which can lead to carrier insertion in the harmonically rich signal **7138**. The operation of the balanced modulator **7104** is discussed in greater detail with reference to flowchart **8500** **(FIG. 85)**, as follows.

[0451] In step **8402**, the buffer/inverter **7112** receives the input baseband signal **7110** and generates input signal **7114** and inverted input signal **7116**. Input signal **7114** is substantially similar to signal **7110**, and inverted signal **7116** is an inverted version of signal **7114**. As such, the buffer/inverter **7112** converts the (single-ended) baseband signal **7110** into differential input signals **7114** and **7116** that will be sampled by the UFT modules. Buffer/inverter **7112** can be implemented using known operational amplifier (op amp) circuits, as will be understood by those skilled in the arts, although the invention is not limited to this example.

[0452] In step **8504**, the summer amplifier **7118** sums the DC reference voltage **7113** applied to terminal **7111** with the input signal **7114**, to generate a combined signal **7120**. Likewise, the summer amplifier **7119** sums the DC reference voltage **7113** with the inverted input signal **7116** to generate a combined signal **7122**. Summer amplifiers **7118** and **7119** can be implemented using known op amp summer circuits, and can be designed to have a specified gain or attenuation, including unity gain, although the invention is not limited to this example. The DC reference voltage **7113** is also distributed to the outputs of both UFT modules **7124** and **7128** through the inductor **7126** as is shown.

[0453] In step **8506**, the control signal generator **7142** generates control signals **7123** and **7127** that are shown by way of example in **FIG. 72B** and **FIG. 72C**, respectively. As illustrated, both control signals **7123** and **7127** have the same period T_S as a master clock signal **7145** **(FIG. 72A)**, but have a pulse width (or aperture) of T_A. In the example, control signal **7123** triggers on the rising pulse edge of the master clock signal **7145**, and control signal **7127** triggers on the falling pulse edge of the master clock signal **7145**. Therefore, control signals **7123** and **7127** are shifted in time by 180 degrees relative to each other. In embodiments of invention, the master clock signal **7145** (and therefore the control signals **7123** and **7127**) have a frequency that is a sub-harmonic of the desired output signal **7140**. The invention is not limited to the example of **FIGS. 72A-72C**.

[0454] In one embodiment, the control signal generator **7142** includes an oscillator **7146**, pulse generators **7144*a*** and **7144*b***, and an inverter **7147** as shown. In operation, the oscillator **7146** generates the master clock signal **7145**, which is illustrated in **FIG. 72A** as a periodic square wave having pulses with a period of T_S. Other clock signals could be used including but not limited to sinusoidal waves, as will be understood by those skilled in the arts. Pulse generator **7144*a*** receives the master clock signal **7145** and triggers on the rising pulse edge, to generate the control signal **7123**. Inverter **7147** inverts the clock signal **7145** to generate an inverted clock signal **7143**. The pulse generator **7144*b*** receives the inverted clock signal **7143** and triggers on the rising pulse edge (which is the falling edge of clock signal **7145**), to generate the control signal **7127**.

[0455] **FIG. 89A**-E illustrate example embodiments for the pulse generator **7144**. **FIG. 89A** illustrates a pulse generator **8902**. The pulse generator **8902** generates pulses **8908** having pulse width T_A from an input signal **8904**. Example input signals **8904** and pulses **8908** are depicted in **FIGS. 89B and 89C**, respectively. The input signal **8904** can be any type of periodic signal, including, but not limited to, a sinusoid, a square wave, a saw-tooth wave etc. The pulse width (or aperture) T_A of the pulses **8908** is determined by delay **8906** of the pulse generator **8902**. The pulse generator **8902** also includes an optional inverter **8910**, which is optionally added for polarity considerations as understood by those skilled in the arts. The example logic and implementation shown for the pulse generator **8902** is provided for illustrative purposes only, and is not limiting. The actual logic employed can take many forms. Additional examples of pulse generation logic are shown in **FIGS. 89D and 89E**. **FIG. 89D** illustrates a rising edge pulse generator **8912** that triggers on the rising edge of input signal **8904**. **FIG. 89E** illustrates a falling edge pulse generator **8916** that triggers on the falling edge of the input signal **8904**.

[0456] In step **8508**, the UFT module **7124** samples the combined signal **7120** according to the control signal **7123**

to generate harmonically rich signal **7130**. More specifically, the switch **7148** closes during the pulse widths T_A of the control signal **7123** to sample the combined signal **7120** resulting in the harmonically rich signal **7130**. **FIG. 71B** illustrates an exemplary frequency spectrum for the harmonically rich signal **7130** having harmonic images **7152***a-n*. The images **7152** repeat at harmonics of the sampling frequency $1/T_S$, at infinitum, where each image **7152** contains the necessary amplitude, frequency, and phase information to reconstruct the baseband signal **7110**. As discussed further below, the relative amplitude of the frequency images is generally a function of the harmonic number and the pulse width T_A. As such, the relative amplitude of a particular harmonic **7152** can be increased (or decreased) by adjusting the pulse width T_A of the control signal **7123**. In general, shorter pulse widths of T_A shift more energy into the higher frequency harmonics, and longer pulse widths of T_A shift energy into the lower frequency harmonics. The generation of harmonically rich signals by sampling an input signal according to a controlled aperture have been described earlier in this application in the section titled, "Frequency Up-conversion Using Universal Frequency Translation", and is illustrated by **FIGS. 3-6**. A more detailed discussion of frequency up-conversion using a switch with a controlled sampling aperture is discussed in the co-pending patent application titled, "Method and System for Frequency Up-Conversion," Ser. No. 09/176,154, field on Oct. 21, 1998, and incorporated herein by reference.

[**0457**] In step **8510**, the UFT module **7128** samples the combined signal **7122** according to the control signal **7127** to generate harmonically rich signal **7134**. More specifically, the switch **7150** closes during the pulse widths T_A of the control signal **7127** to sample the combined signal **7122** resulting in the harmonically rich signal **7134**. The harmonically rich signal **7134** includes multiple frequency images of baseband signal **7110** that repeat at harmonics of the sampling frequency ($1/T_S$), similar to that for the harmonically rich signal **7130**. However, the images in the signal **7134** are phase-shifted compared to those in signal **7130** because of the inversion of signal **7116** compared to signal **7114**, and because of the relative phase shift between the control signals **7123** and **7127**.

[**0458**] In step **8512**, the node **7132** sums the harmonically rich signals **7130** and **7134** to generate harmonically rich signal **7133**. **FIG. 71C** illustrates an exemplary frequency spectrum for the harmonically rich signal **7133** that has multiple images **7154***a-n* that repeat at harmonics of the sampling frequency $1/T_S$. Each image **7154** includes the necessary amplitude, frequency and phase information to reconstruct the baseband signal **7110**. The capacitor **7136** operates as a DC blocking capacitor and substantially passes the harmonics in the harmonically rich signal **7133** to generate harmonically rich signal **7138** at the output of the modulator **7104**.

[**0459**] In step **8408**, the optional filter **7106** can be used to select a desired harmonic image for transmission. This is represented for example by a passband **7156** that selects the harmonic image **7154***c* for transmission in **FIG. 71C**.

[**0460**] An advantage of the modulator **7104** is that it is fully balanced, which substantially minimizes (or eliminates) any DC voltage offset between the two UFT modules **7124** and **7128**. DC offset is minimized because the reference voltage **7113** contributes a consistent DC component to the input signals **7120** and **7122** through the summing amplifiers **7118** and **7119**, respectively. Furthermore, the reference voltage **7113** is also directly coupled to the outputs of the UFT modules **7124** and **7128** through the inductor **7126** and the node **7132**. The result of controlling the DC offset between the UFT modules is that carrier insertion is minimized in the harmonic images of the harmonically rich signal **7138**. As discussed above, carrier insertion is substantially wasted energy because the information for a modulated signal is carried in the sidebands of the modulated signal and not in the carrier. Therefore, it is often desirable to minimize the energy at the carrier frequency by controlling the relative DC offset.

[**0461**] 7.3.1.2 Balanced Modulator Example Signal Diagrams and Mathematical Description

[**0462**] In order to further describe the invention, **FIGS. 72D-72I** illustrate various example signal diagrams (vs. time) that are representative of the invention. These signal diagrams are meant for example purposes only and are not meant to be limiting. **FIG. 72D** illustrates a signal **7202** that is representative of the input baseband signal **7110** (**FIG. 71A**). **FIG. 72E** illustrates a step function **7204** that is an expanded portion of the signal **7202** from time t_0 to t_1, and represents signal **7114** at the output of the buffer/inverter **7112**. Similarly, **FIG. 72F** illustrates a signal **7206** that is an inverted version of the signal **7204**, and represents the signal **7116** at the inverted output of buffer/inverter **7112**. For analysis purposes, a step function is a good approximation for a portion of a single bit of data (for the baseband signal **7110**) because the clock rates of the control signals **7123** and **7127** are significantly higher than the data rates of the baseband signal **7110**. For example, if the data rate is in the KHz frequency range, then the clock rate will preferably be in MHZ frequency range in order to generate an output signal in the Ghz frequency range.

[**0463**] Still referring to FIGS. 72D-I, **FIG. 72G** illustrates a signal **7208** that an example of the harmonically rich signal **7130** when the step function **7204** is sampled according to the control signal **7123** in **FIG. 72B**. The signal **7208** includes positive pulses **7209** as referenced to the DC voltage **7113**. Likewise, **FIG. 72H** illustrates a signal **7210** that is an example of the harmonically rich signal **7134** when the step function **7206** is sampled according to the control signal **7127**. The signal **7210** includes negative pulses **7211** as referenced to the DC voltage **7113**, which are time-shifted relative the positive pulses **7209** in signal **7208**.

[**0464**] Still referring to FIGS. 72D-I, the **FIG. 72I** illustrates a signal **7212** that is the combination of signal **7208** (**FIG. 72G**) and the signal **7210** (**FIG. 72H**), and is an example of the harmonically rich signal **7133** at the output of the summing node **7132**. As illustrated, the signal **7212** spends approximately as much time above the DC reference voltage **7113** as below the DC reference voltage **7113** over a limited time period. For example, over a time period **7214**, the energy in the positive pulses **7209***a-b* is canceled out by the energy in the negative pulses **7211***a-b*. This is indicative of minimal (or zero) DC offset between the UFT modules **7124** and **7128**, which results in minimal carrier insertion during the sampling process.

[**0465**] Still referring to **FIG. 72I**, the time axis of the signal **7212** can be phased in such a manner to represent the

waveform as an odd function. For such an arrangement, the Fourier series is readily calculated to obtain:

$$I_c(t) = \sum_{n=1}^{\infty}\left(\frac{4\sin\left(\frac{n\pi T_A}{T_s}\right)\cdot\sin\left(\frac{n\pi}{2}\right)}{n\pi}\right)\cdot\sin\left(\frac{2n\pi t}{T_s}\right) \quad \text{Equation 1.}$$

[0466] where:

[0467] T_S=period of the master clock **7145**

[0468] T_A=pulse width of the control signals **7123** and **7127**

[0469] n=harmonic number

[0470] As shown by Equation 1, the relative amplitude of the frequency images is generally a function of the harmonic number n, and the ratio of T_A/T_S. As indicated, the T_A/T_S ratio represents the ratio of the pulse width of the control signals relative to the period of the sub-harmonic master clock. The TA/TS ratio can be optimized in order to maximize the amplitude of the frequency image at a given harmonic. For example, if a passband waveform is desired to be created at 5× the frequency of the sub-harmonic clock, then a baseline power for that harmonic extraction may be calculated for the fifth harmonic (n=5) as:

$$I_c(t) = \left(\frac{4\sin\left(\frac{5\pi T_A}{T_s}\right)}{5\pi}\right)\cdot\sin(5\omega_s t) \quad \text{Equation 2.}$$

[0471] As shown by Equation 2, $I_C(t)$ for the fifth harmonic is a sinusoidal function having an amplitude that is proportional to the sin $(5\pi T_A/T_S)$. The signal amplitude can be maximized by setting $T_A=(1/10-T_S)$ so that sin $(5\pi T_A/T_S)$=sin $(\pi/2)$=1. Doing so results in the equation:

$$I_c(t)\Big|_{n=5}\ \frac{4}{5\pi}(\sin(5\omega_s t)) \quad \text{Equation 3.}$$

[0472] This component is a frequency at 5× of the sampling frequency of sub-harmonic clock, and can be extracted from the Fourier series via a bandpass filter (such as bandpass filter **7106**) that is centered around $5f_S$. The extracted frequency component can then be optionally amplified by the amplifier **7108** prior to transmission on a wireless or wire-line communications channel or channels.

[0473] Equation 3 can be extended to reflect the inclusion of a message signal as illustrated by equation 4 below:

$$m(t)\cdot I_c(t)\Big|_{\substack{n=5\\ \theta=\theta(t)}} = \frac{4\cdot m(t)}{5\pi}(\sin(5\omega_s t + 5\theta(t))) \quad \text{Equation 4.}$$

[0474] Equation 4 illustrates that a message signal can be carried in harmonically rich signals **7133** such that both amplitude and phase can be modulated. In other words, m(t) is modulated for amplitude and θ(t) is modulated for phase. In such cases, it should be noted that θ(t) is augmented modulo n while the amplitude modulation m(t) is simply scaled.

[0475] Therefore, complex waveforms may be reconstructed from their Fourier series with multiple aperture UFT combinations.

[0476] As discussed above, the signal amplitude for the 5th harmonic was maximized by setting the sampling aperture width $T_A=1/10T_S$, where T_S is the period of the master, clock signal. This can be restated and generalized as setting $T_A=½$ the period (or π radians) at the harmonic of interest. In other words, the signal amplitude of any harmonic n can be maximized by sampling the input waveform with a sampling aperture of $T_A=½$ the period of the harmonic of interest (n). Based on this discussion, it is apparent that varying the aperture changes the harmonic and amplitude content of the output waveform. For example, if the sub-harmonic clock has a frequency of 200 MHZ, then the fifth harmonic is at 1 Ghz. The amplitude of the fifth harmonic is maximized by setting the aperture width T_A=500 picoseconds, which equates to ½ the period (or π radians) at 1 Ghz.

[0477] **FIG. 72J** depicts a frequency, plot **7216** that graphically illustrates the effect of varying the sampling aperture of the control signals on the harmonically rich signal **7133** given a 200 MHZ harmonic clock. The frequency plot **7216** compares two frequency spectrums **7218** and **7220** for different control signal apertures given a 200 MHZ clock. More specifically, the frequency spectrum **7218** is an example spectrum for signal **7133** given the 200 MHZ clock with the aperture T_A=500 psec (where 500 psec is π radians at the 5th harmonic of 1 GHz). Similarly, the frequency spectrum **7220** is an example spectrum for signal **7133** given a 200 MHZ clock that is a square wave (so T_A=5000 psec). The spectrum **7218** includes multiple harmonics **7218*a*-1**, and the frequency spectrum **7220** includes multiple harmonics **7220*a*-*e***. [It is noted that spectrum **7220** includes only the odd harmonics as predicted by Fourier analysis for a square wave.] At 1 Ghz (which is the 5th harmonic), the signal amplitude of the two frequency spectrums **7218*e*** and **7220*c*** are approximately equal. However, at 200 MHZ, the frequency spectrum **7218*a*** has a much lower amplitude than the frequency spectrum **7220*a***, and therefore the frequency spectrum **7218** is more efficient than the frequency spectrum **7220**, assuming the desired harmonic is the 5th harmonic. In other words, assuming 1 Ghz is the desired harmonic, the frequency spectrum **7218** wastes less energy at the 200 MHZ fundamental than does the frequency spectrum **7218**.

[0478] 7.3.1.3 Balanced Modulator Having a Shunt Configuration

[0479] **FIG. 79A** illustrates a universal transmitter **7900** that is a second embodiment of a universal transmitter having two balanced UFT modules in a shunt configuration. (In contrast, the balanced modulator **7104** can be described as having a series configuration based on the orientation of the UFT modules.) Transmitter **7900** includes a balanced modulator **7901**, the control signal generator **7142**, the optional bandpass filter **7106**, and the optional amplifier **7108**. The transmitter **7900** up-converts a baseband signal **7902** to produce an output signal **7936** that is conditioned for wireless or wire line transmission. In doing so, the balanced

modulator **7901** receives the baseband signal **7902** and shunts the baseband signal to ground in a differential and balanced fashion to generate a harmonically rich signal **7934**. The harmonically rich signal **7934** includes multiple harmonic images, where each image contains the baseband information in the baseband signal **7902**. In other words, each harmonic image includes the necessary amplitude, frequency, and phase information to reconstruct the baseband signal **7902**. The optional bandpass filter **7106** may be included to select a harmonic of interest (or a subset of harmonics) in the signal **7934** for transmission. The optional amplifier **7108** may be included to amplify the selected harmonic prior to transmission, resulting in the output signal **7936**.

[**0480**] The balanced modulator **7901** includes the following components: a buffer/inverter **7904**; optional impedances **7910**, **7912**; UFT modules **7916** and **7922** having controlled switches **7918** and **7924**, respectively; blocking capacitors **7928** and **7930**; and a terminal **7920** that is tied to ground. As stated above, the balanced modulator **7901** differentially shunts the baseband signal **7902** to ground, resulting in a harmonically rich signal **7934**. More specifically, the UFT modules **7916** and **7922** alternately shunts the baseband signal to terminal **7920** according to control signals **7123** and **7127**, respectively. Terminal **7920** is tied to ground and prevents any DC offset voltages from developing between the UFT modules **7916** and **7922**. As described above, a DC offset voltage can lead to undesired carrier insertion. The operation of the balanced modulator **7901** is described in greater detail according to the flowchart **8600** (**FIG. 86**) as follows.

[**0481**] In step **8402**, the buffer/inverter **7904** receives the input baseband signal **7902** and generates I signal **7906** and inverted I signal **7908**. I signal **7906** is substantially similar to the baseband signal **7902**, and the inverted I signal **7908** is an inverted version of signal **7902**. As such, the buffer/inverter **7904** converts the (single-ended) baseband signal **7902** into differential signals **7906** and **7908** that are sampled by the UFT modules. Buffer/inverter **7904** can be implemented using known operational amplifier (op amp) circuits, as will be understood by those skilled in the arts, although the invention is not limited to this example.

[**0482**] In step **8604**, the control signal generator **7142** generates control signals **7123** and **7127** from the master clock signal **7145**. Examples of the master clock signal **7145**, control signal **7123**, and control signal **7127** are shown in FIGS. **72**A-C, respectively. As illustrated, both control signals **7123** and **7127** have the same period T_S as a master clock signal **7145**, but have a pulse width (or aperture) of T_A. Control signal **7123** triggers on the rising pulse edge of the master clock signal **7145**, and control signal **7127** triggers on the falling pulse edge of the master clock signal **7145**. Therefore, control signals **7123** and **7127** are shifted in time by 180 degrees relative to each other. A specific embodiment of the control signal generator **7142** is illustrated in **FIG. 71A**, and was discussed in detail above.

[**0483**] In step **8606**, the UFT module **7916** shunts the signal **7906** to ground according to the control signal **7123**, to generate a harmonically rich signal **7914**. More specifically, the switch **7918** closes and shorts the signal **7906** to ground (at terminal **7920**) during the aperture width T_A of the control signal **7123**, to generate the harmonically rich signal **7914**. **FIG. 79B** illustrates an exemplary frequency spectrum for the harmonically rich signal **7918** having harmonic images **7950***a-n*. The images **7950** repeat at harmonics of the sampling frequency $1/T_S$, at infinitum, where each image **7950** contains the necessary amplitude, frequency, and phase information to reconstruct the baseband signal **7902**. The generation of harmonically rich signals by sampling an input signal according to a controlled aperture have been described earlier in this application in the section titled, "Frequency Up-conversion Using Universal Frequency Translation", and is illustrated by **FIGS. 3-6**. A more detailed discussion of frequency up-conversion using a switch with a controlled sampling aperture is discussed in the co-pending patent application titled, "Method and System for Frequency Up-Conversion," Ser. No. 09/176,154, field on Oct. 21, 1998, and incorporated herein by reference.

[**0484**] The relative amplitude of the frequency images **7950** are generally a function of the harmonic number and the pulse width T_A. As such, the relative amplitude of a particular harmonic **7950** can be increased (or decreased) by adjusting the pulse width T_A of the control signal **7123**. In general, shorter pulse widths of T_A shift more energy into the higher frequency harmonics, and longer pulse widths of TA shift energy into the lower frequency harmonics, as described by equations 1-4 above. Additionally, the relative amplitude of a particular harmonic **7950** can also be adjusted by adding/tuning an optional impedance **7910**. Impedance **7910** operates as a filter that emphasizes a particular harmonic in the harmonically rich signal **7914**.

[**0485**] In step **8608**, the UFT module **7922** shunts the inverted signal **7908** to ground according to the control signal **7127**, to generate a harmonically rich signal **7926**. More specifically, the switch **7924** closes during the pulse widths T_A and shorts the inverted I signal **7908** to ground (at terminal **7920**), to generate the harmonically rich signal **7926**. At any given time, only one of input signals **7906** or **7908** is shorted to ground because the pulses in the control signals **7123** and **7127** are phase shifted with respect to each other, as shown in **FIGS. 72B and 72C**.

[**0486**] The harmonically rich signal **7926** includes multiple frequency images of baseband signal **7902** that repeat at harmonics of the sampling frequency ($1/T_S$), similar to that for the harmonically rich signal **7914**. However, the images in the signal **7926** are phase-shifted compared to those in signal **7914** because of the inversion of the signal **7908** compared to the signal **7906**, and because of the relative phase shift between the control signals **7123** and **7127**. The optional impedance **7912** can be included to emphasis a particular harmonic of interest, and is similar to the impedance **7910** above.

[**0487**] In step **8610**, the node **7932** sums the harmonically rich signals **7914** and **7926** to generate the harmonically rich signal **7934**. The capacitors **7928** and **7930** operate as blocking capacitors that substantially pass the respective harmonically rich signals **7914** and **7926** to the node **7932**. (The capacitor values may be chosen to substantially block baseband frequency components as well.) **FIG. 79C** illustrates an exemplary frequency spectrum for the harmonically rich signal **7934** that has multiple images **7952***a-n* that repeat at harmonics of the sampling frequency $1/T_S$. Each image **7952** includes the necessary amplitude, frequency, and phase information to reconstruct the baseband signal

7902. The optional filter **7106** can be used to select the harmonic image of interest for transmission. This is represented by a passband **7956** that selects the harmonic image **7932***c* for transmission.

[**0488**] An advantage of the modulator **7901** is that it is fully balanced, which substantially minimizes (or eliminates) any DC voltage offset between the two UFT modules **7912** and **7914**. DC offset is minimized because the UFT modules **7916** and **7922** are both connected to ground at terminal **7920**. The result of controlling the DC offset between the UFT modules is that carrier insertion is minimized in the harmonic images of the harmonically rich signal **7934**. As discussed above, carrier insertion is substantially wasted energy because the information for a modulated signal is carried in the sidebands of the modulated signal and not in the carrier. Therefore, it is often desirable to minimize the energy at the carrier frequency by controlling the relative DC offset.

[**0489**] 7.3.1.4 Balanced Modulator FET Configuration

[**0490**] As described above, the balanced modulators **7104** and **7901** utilize two balanced UFT modules to sample the input baseband signals to generate harmonically rich signals that contain the up-converted baseband information. More specifically, the UFT modules include controlled switches that sample the baseband signal in a balanced and differential fashion. **FIGS. 71D and 79D** illustrate embodiments of the controlled switch in the UFT module.

[**0491**] **FIG. 71D** illustrates an example embodiment of the modulator **7104** (**FIG. 71B**) where the controlled switches in the UFT modules are field effect transistors (FET). More specifically, the controlled switches **7148** and **7128** are embodied as FET **7158** and FET **7160**, respectively. The FET **7158** and **7160** are oriented so that their gates are controlled by the control signals **7123** and **7127**, so that the control signals control the FET conductance. For the FET **7158**, the combined baseband signal **7120** is received at the source of the FET **7158** and is sampled according to the control signal **7123** to produce the harmonically rich signal **7130** at the drain of the FET **7158**. Likewise, the combined baseband signal **7122** is received at the source of the FET **7160** and is sampled according to the control signal **7127** to produce the harmonically rich signal **7134** at the drain of FET **7160**. The source and drain orientation that is illustrated is not limiting, as the source and drains can be switched for most FETs. In other words, the combined baseband signal can be received at the drain of the FETs, and the harmonically rich signals can be taken from the source of the FETs, as will be understood by those skilled in the relevant arts.

[**0492**] **FIG. 79D** illustrates an embodiment of the modulator **7900** (**FIG. 79A**) where the controlled switches in the UFT modules are field effect transistors (FET). More specifically, the controlled switches **7918** and **7924** are embodied as FET **7936** and FET **7938**, respectively. The FETs **7936** and **7938** are oriented so that their gates are controlled by the control signals **7123** and **7127**, respectively, so that the control signals determine FET conductance. For the FET **7936**, the baseband signal **7906** is received at the source of the FET **7936** and shunted to ground according to the control signal **7123**, to produce the harmonically rich signal **7914**. Likewise, the baseband signal **7908** is received at the source of the FET **7938** and is shunted to grounding according to the control signal **7127**, to produce the harmonically rich signal **7926**. The source and drain orientation that is illustrated is not limiting, as the source and drains can be switched for most FETs, as will be understood by those skilled in the relevant arts.

[**0493**] 7.3.1.5 Universal Transmitter Configured for Carrier Insertion

[**0494**] As discussed above, the transmitters **7102** and **7900** have a balanced configuration that substantially eliminates any DC offset and results in minimal carrier insertion in the output signal **7140**. Minimal carrier insertion is generally desired for most applications because the carrier signal carries no information and reduces the overall transmitter efficiency. However, some applications require the received signal to have sufficient carrier energy for the receiver to extract the carrier for coherent demodulation. In support thereof, the present invention can be configured to provide the necessary carrier insertion by implementing a DC offset between the two sampling UFT modules.

[**0495**] **FIG. 73A** illustrates a transmitter **7302** that up-converts a baseband signal **7306** to an output signal **7322** having carrier insertion. As is shown, the transmitter **7302** is similar to the transmitter **7102** (**FIG. 71A**) with the exception that the up-converter/modulator **7304** is configured to accept two DC references voltages. In contrast, modulator **7104** was configured to accept only one DC reference voltage. More specifically, the modulator **7304** includes a terminal **7309** to accept a DC reference voltage **7308**, and a terminal **7313** to accept a DC reference voltage **7314**. Vr **7308** appears at the UFT module **7124** though summer amplifier **7118** and the inductor **7310**. Vr **7314** appears at UFT module **7128** through the summer amplifier **7119** and the inductor **7316**. Capacitors **7312** and **7318** operate as blocking capacitors. If Vr **7308** is different from Vr **7314** then a DC offset voltage will be exist between UFT module **7124** and UFT module **7128**, which will be up-converted at the carrier frequency in the harmonically rich signal **7320**. More specifically, each harmonic image in the harmonically rich signal **7320** will include a carrier signal as depicted in **FIG. 73B**.

[**0496**] **FIG. 73B** illustrates an exemplary frequency spectrum for the harmonically rich signal **7320** that has multiple harmonic images **7324***a-n*. In addition to carrying the baseband information in the sidebands, each harmonic image **7324** also includes a carrier signal **7326** that exists at respective harmonic of the sampling frequency $1/T_S$. The amplitude of the carrier signal increases with increasing DC offset voltage. Therefore, as the difference between Vr **7308** and Vr **7314** widens, the amplitude of each carrier signal **7326** increases. Likewise, as the difference between Vr **7308** and Vr **7314** shrinks, the amplitude of each carrier signal **7326** shrinks. As with transmitter **7302**, the optional bandpass filter **7106** can be included to select a desired harmonic image for transmission. This is represented by passband **7328** in **FIG. 73B**.

[**0497**] 7.3.2 Universal Transmitter In I Q Configuration:

[**0498**] As described above, the balanced modulators **7104** and **7901** up-convert a baseband signal to a harmonically rich signal having multiple harmonic images of the baseband information. By combining two balanced modulators, IQ configurations can be formed for up-converting I and Q baseband signals. In doing so, either the (series type) bal-

anced modulator **7104** or the (shunt type) balanced modulator **7901** can be utilized. IQ modulators having both series and shunt configurations are described below.

[**0499**] 7.3.2.1 IQ Transmitter Using Series-Type Balanced Modulator

[**0500**] **FIG. 74** illustrates an IQ transmitter **7420** with an in-phase (I) and quadrature (O) configuration according to embodiments of the invention. The transmitter **7420** includes an IQ balanced modulator **7410**, an optional filter **7414**, and an optional amplifier **7416**. The transmitter **7420** is useful for transmitting complex I Q waveforms and does so in a balanced manner to control DC offset and carrier insertion. In doing so, the modulator **7410** receives an I baseband signal **7402** and a Q baseband signal **7404** and up-converts these signals to generate a combined harmonically rich signal **7412**. The harmonically rich signal **7412** includes multiple harmonics images, where each image contains the baseband information in the I signal **7402** and the Q signal **7404**. The optional bandpass filter **7414** may be included to select a harmonic of interest (or subset of harmonics) from the signal **7412** for transmission. The optional amplifier **7416** may be included to amplify the selected harmonic prior to transmission, to generate the IQ output signal **7418**.

[**0501**] As stated above, the balanced IQ modulator **7410** up-converts the I baseband signal **7402** and the Q baseband signal **7404** in a balanced manner to generate the combined harmonically rich signal **7412** that carriers the I and Q baseband information. To do so, the modulator **7410** utilizes two balanced modulators **7104** from **FIG. 71A**, a signal combiner **7408**, and a DC terminal **7407**. The operation of the balanced modulator **7410** and other circuits in the transmitter is described according to the flowchart **8700** in **FIG. 87**, as follows.

[**0502**] In step **8702**, the IQ modulator **7410** receives the I baseband signal **7402** and the Q baseband signal **7404**.

[**0503**] In step **8704**, the I balanced modulator **7104***a* samples the I baseband signal **7402** in a differential fashion using the control signals **7123** and **7127** to generate a harmonically rich signal **7411***a*. The harmonically rich signal **7411***a* contains multiple harmonic images of the I baseband information, similar to the harmonically rich signal **7130** in **FIG. 71B**.

[**0504**] In step **8706**, the balanced modulator **7104***b* samples the Q baseband signal **7404** in a differential fashion using control signals **7123** and **7127** to generate harmonically rich signal **7411***b*, where the harmonically rich signal **7411***b* contains multiple harmonic images of the Q baseband signal **7404**. The operation of the balanced modulator **7104** and the generation of harmonically rich signals was fully described above and illustrated in FIGS. 71A-C, to which the reader is referred for further details.

[**0505**] In step **8708**, the DC terminal **7407** receives a DC voltage **7406** that is distributed to both modulators **7104***a* and **7104***b*. The DC voltage **7406** is distributed to both the input and output of both UFT modules **7124** and **7128** in each modulator **7104**. This minimizes (or prevents) DC offset voltages from developing between the four UFT modules, and thereby minimizes or prevents any carrier insertion during the sampling steps **8704** and **8706**.

[**0506**] In step **8710**, the 90 degree signal combiner **7408** combines the harmonically rich signals **7411***a* and **7411***b* to generate IQ harmonically rich signal **7412**. This is further illustrated in FIGS. 75A-C. **FIG. 75A** depicts an exemplary frequency spectrum for the harmonically rich signal **7411***a* having harmonic images **7502***a-n*. The images **7502** repeat at harmonics of the sampling frequency $1/T_S$, where each image **7502** contains the necessary amplitude and frequency information to reconstruct the I baseband signal **7402**. Likewise, **FIG. 75B** depicts an exemplary frequency spectrum for the harmonically rich signal **7411***b* having harmonic images **7504***a-n*. The harmonic images **7504***a-n* also repeat at harmonics of the sampling frequency $1/T_S$, where each image **7504** contains the necessary amplitude, frequency, and phase information to reconstruct the Q baseband signal **7404**. **FIG. 75C** illustrates an exemplary frequency spectrum for the combined harmonically rich signal **7412** having images **7506**. Each image **7506** carries the I baseband information and the Q baseband information from the corresponding images **7502** and **7504**, respectively, without substantially increasing the frequency bandwidth occupied by each harmonic **7506**. This can occur because the signal combiner **7408** phase shifts the Q signal **7411***b* by 90 degrees relative to the I signal **7411***a*. The result is that the images **7502***a-n* and **7504***a-n* effectively share the signal bandwidth do to their orthogonal relationship. For example, the images **7502***a* and **7504***a* effectively share the frequency spectrum that is represented by the image **7506***a*.

[**0507**] In step **8712**, the optional filter **7414** can be included to select a harmonic of interest, as represented by the passband **7508** selecting the image **7506***c* in **FIG. 75***c*.

[**0508**] In step **8714**, the optional amplifier **7416** can be included to amplify the harmonic (or harmonics) of interest prior to transmission.

[**0509**] In step **8716**, the selected harmonic (or harmonics) is transmitted over a communications medium.

[**0510**] **FIG. 76A** illustrates a transmitter **7608** that is a second embodiment for an I Q transmitter having a balanced configuration. Transmitter **7608** is similar to the transmitter **7420** except that the 90 degree phase shift between the I and Q channels is achieved by phase shifting the control signals instead of using a 90 degree signal combiner to combine the harmonically rich signals. More specifically, delays **7604***a* and **7604***b* delay the control signals **7123** and **7127** for the Q channel modulator **7104***b* by 90 degrees relative the control signals for the I channel modulator **7104***a*. As a result, the Q modulator **7104***b* samples the Q baseband signal **7404** with 90 degree delay relative to the sampling of the I baseband signal **7402** by the I channel modulator **7104***a*. Therefore, the Q harmonically rich signal **7411***b* is phase shifted by 90 degrees relative to the I harmonically rich signal. Since the phase shift is achieved using the control signals, an in-phase signal combiner **7606** combines the harmonically rich signals **7411***a* and **7411***b*, to generate the harmonically rich signal **7412**.

[**0511**] **FIG. 76B** illustrates a transmitter **7618** that is similar to transmitter **7608** in **FIG. 76A**. The difference being that the transmitter **7618** has a modulator **7620** that utilizes a summing node **7622** to sum the signals **7411***a* and **7411***b* instead of the in-phase signal combiner **7606** that is used in modulator **7602** of transmitter **7608**.

[**0512**] **FIG. 90A-90D** illustrate various detailed circuit implementations of the transmitter **7420** in **FIG. 74**. These

circuit implementations are meant for example purposes only, and are not meant to be limiting.

[0513] **FIG. 90A** illustrates I input circuitry **9002***a* and Q input circuitry **9002***b* that receive the I and Q input signals **7402** and **7404**, respectively.

[0514] **FIG. 90B** illustrates the I channel circuitry **9006** that processes an I data **9004***a* from the I input circuit **9002***a*.

[0515] **FIG. 90C** illustrates the Q channel circuitry **9008** that processes the Q data **9004***b* from the Q input circuit **9002***b*.

[0516] **FIG. 90D** illustrates the output combiner circuit **9012** that combines the I channel data **9007** and the Q channel data **9010** to generate the output signal **7418**.

[0517] 7.3.2.2 IQ Transmitter Using Shunt-Type Balanced Modulator

[0518] **FIG. 80** illustrates an IQ transmitter **8000** that is another IQ transmitter embodiment according to the present invention. The transmitter **8000** includes an IQ balanced modulator **8001**, an optional filter **8012**, and an optional amplifier **8014**. During operation, the modulator **8001** up-converts an I baseband signal **8002** and a Q baseband signal **8004** to generate a combined harmonically rich signal **8011**. The harmonically rich signal **8011** includes multiple harmonics images, where each image contains the baseband information in the I signal **8002** and the Q signal **8004**. The optional bandpass filter **8012** may be included to select a harmonic of interest (or subset of harmonics) from the harmonically rich signal **8011** for transmission. The optional amplifier **8014** may be included to amplify the selected harmonic prior to transmission, to generate the IQ output signal **8016**.

[0519] The IQ modulator **8001** includes two shunt balanced modulators **7901** from **FIG. 79A**, and a 90 degree signal combiner **8010** as shown. The operation of the IQ modulator **8001** is described in reference to the flowchart **8800** (**FIG. 88**), as follows. The order of the steps in flowchart **8800** is not limiting.

[0520] In step **8802**, the balanced modulator **8001** receives the I baseband signal **8002** and the Q baseband signal **8004**.

[0521] In step **8804**, the balanced modulator **7901***a* differentially shunts the I baseband signal **8002** to ground according the control signals **7123** and **7127**, to generate a harmonically rich signal **8006**. More specifically, the UFT modules **7916***a* and **7922***a* alternately shunt the I baseband signal **8002** and an inverted version of the I baseband signal **8002** to ground according to the control signals **7123** and **7127**, respectively. The operation of the balanced modulator **7901** and the generation of harmonically rich signals was fully described above and is illustrated in FIGS. **79**A-C, to which the reader is referred for further details. As such, the harmonically rich signal **8006** contains multiple harmonic images of the I baseband information as described above.

[0522] In step **8806**, the balanced modulator **7901***b* differentially shunts the Q baseband signal **8004** to ground according to control signals **7123** and **7127**, to generate harmonically rich signal **8008**. More specifically, the UFT modules **7916***b* and **7922***b* alternately shunt the Q baseband signal **8004** and an inverted version of the Q baseband signal **8004** to ground, according to the control signals **7123** and **7127**, respectively. As such, the harmonically rich signal **8008** contains multiple harmonic images that contain the Q baseband information.

[0523] In step **8808**, the 90 degree signal combiner **8010** combines the harmonically rich signals **8006** and **8008** to generate IQ harmonically rich signal **8011**. This is further illustrated in FIGS. **81**A-C. **FIG. 81A** depicts an exemplary frequency spectrum for the harmonically rich signal **8006** having harmonic images **8102***a-n*. The harmonic images **8102** repeat at harmonics of the sampling frequency $1/T_S$, where each image **8102** contains the necessary amplitude, frequency, and phase information to reconstruct the I baseband signal **8002**. Likewise, **FIG. 81B** depicts an exemplary frequency spectrum for the harmonically rich signal **8008** having harmonic images **8104***a-n*. The harmonic images **8104***a-n* also repeat at harmonics of the sampling frequency $1/T_S$, where each image **8104** contains the necessary amplitude, frequency, and phase information to reconstruct the Q baseband signal **8004**. **FIG. 81C** illustrates an exemplary frequency spectrum for the IQ harmonically rich signal **8011** having images **8106***a-n*. Each image **8106** carries the I baseband information and the Q baseband information from the corresponding images **8102** and **8104**, respectively, without substantially increasing the frequency bandwidth occupied by each image **8106**. This can occur because the signal combiner **8010** phase shifts the Q signal **8008** by 90 degrees relative to the I signal **8006**.

[0524] In step **8810**, the optional filter **8012** may be included to select a harmonic of interest, as represented by the passband **8108** selecting the image **8106***c* in **FIG. 81C**.

[0525] In step **8812**, the optional amplifier **8014** can be included to amplify the selected harmonic image **8106** prior to transmission.

[0526] In step **8814**, the selected harmonic (or harmonics) is transmitted over a communications medium.

[0527] **FIG. 82** illustrates a transmitter **8200** that is another embodiment for an IQ transmitter having a balanced configuration. Transmitter **8200** is similar to the transmitter **8000** except that the 90 degree phase shift between the I and Q channels is achieved by phase shifting the control signals instead of using a 90 degree signal combiner to combine the harmonically rich signals. More specifically, delays **8204***a* and **8204***b* delay the control signals **7123** and **7127** for the Q channel modulator **7901***b* by 90 degrees relative the control signals for the I channel modulator **7901***a*. As a result, the Q modulator **7901***b* samples the Q baseband signal **8004** with a 90 degree delay relative to the sampling of the I baseband signal **8002** by the I channel modulator **7901***a*. Therefore, the Q harmonically rich signal **8008** is phase shifted by 90 degrees relative to the I harmonically rich signal **8006**. Since the phase shift is achieved using the control signals, an in-phase signal combiner **8206** combines the harmonically rich signals **8006** and **8008**, to generate the harmonically rich signal **8011**.

[0528] **FIG. 83** illustrates a transmitter **8300** that is similar to transmitter **8200** in **FIG. 82**. The difference being that the transmitter **8300** has a balanced modulator **8302** that utilizes a summing node **8304** to sum the I harmonically rich signal **8006** and the Q harmonically rich signal **8008** instead of the in-phase signal combiner **8206** that is used in the modulator **8202** of transmitter **8200**. The 90 degree phase shift between

the I and Q channels is implemented by delaying the Q clock signals using 90 degree delays **8204**, as shown.

[**0529**] 7.3.2.3 IQ Transmitters Configured for Carrier Insertion

[**0530**] The transmitters **7420 (FIG. 74)** and **7608 (FIG. 76A)** have a balanced configuration that substantially eliminates any DC offset and results in minimal carrier insertion in the IQ output signal **7418**. Minimal carrier insertion is generally desired for most applications because the carrier signal carries no information and reduces the overall transmitter efficiency. However, some applications require the received signal to have sufficient carrier energy for the receiver to extract the carrier for coherent demodulation. In support thereof, **FIG. 77** illustrates a transmitter **7702** to provide any necessary carrier insertion by implementing a DC offset between the two sets of sampling UFT modules.

[**0531**] Transmitter **7702** is similar to the transmitter **7420** with the exception that a modulator **7704** in transmitter **7702** is configured to accept two DC reference voltages so that the I channel modulator **7104***a* can be biased separately from the Q channel modulator **7104***b*. More specifically, modulator **7704** includes a terminal **7706** to accept a DC voltage reference **7707**, and a terminal **7708** to accept a DC voltage reference **7709**. Voltage **7707** biases the UFT modules **7124***a* and **7128***a* in the I channel modulator **7104***a*. Likewise, voltage **7709** biases the UFT modules **7124***b* and **7128***b* in the Q channel modulator **7104***b*. When voltage **7707** is different from voltage **7709**, then a DC offset will appear between the I channel modulator **7104***a* and the Q channel modulator **7104***b*, which results in carrier insertion in the IQ harmonically rich signal **7412**. The relative amplitude of the carrier frequency energy increases in proportion to the amount of DC offset.

[**0532**] **FIG. 78** illustrates a transmitter **7802** that is a second embodiment of an IQ transmitter having two DC terminals to cause DC offset, and therefore carrier insertion. Transmitter **7802** is similar to transmitter **7702** except that the 90 degree phase shift between the I and Q channels is achieved by phase shifting the control signals, similar to that done in transmitter **7608**. More specifically, delays **7804***a* and **7804***b* phase shift the control signals **7123** and **7127** for the Q channel modulator **7104***b* relative to those of the I channel modulator **7104***a*. As a result, the Q modulator **7104***b* samples the Q baseband signal **7404** with 90 degree delay relative to the sampling of the I baseband signal **7402** by the I channel modulator **7104***a*. Therefore, the Q harmonically rich signal **7411***b* is phase shifted by 90 degrees relative to the I harmonically rich signal **7411***a*, which are combined by the in-phase combiner **7806**.

[**0533**] 7.4 Transceiver Embodiments

[**0534**] Referring to **FIG. 39**, in embodiments the receiver **3906**, transmitter **3910**, and LNA/PA **3904** are configured as a transceiver, such as but not limited to transceiver **9100**, that is shown in **FIG. 91**.

[**0535**] Referring to **FIG. 91**, the transceiver **9100** includes a diplexer **9108**, the IQ receiver **7000**, and the IQ transmitter **8000**. Transceiver **9100** up-converts an I baseband signal **9114** and a Q baseband signal **9116** using the IQ transmitter **8000 (FIG. 80)** to generate an IQ RF output signal **9106**. A detailed description of the IQ transmitter **8000** is included for example in section 7.3.2.2, to which the reader is referred for further details. Additionally, the transceiver **9100** also down-converts a received RF signal **9104** using the IQ Receiver **7000**, resulting in I baseband output signal **9110** and a Q baseband output signal **9112**. A detailed description of the IQ receiver **7000** is included in section 7.2.2, to which the reader is referred for further details.

[**0536**] 7.5 Demodulator/Modulator Facilitation Module

[**0537**] An example demodulator/modulator facilitation module **3912** is shown in **FIGS. 47 and 48**. A corresponding BOM list is shown in **FIGS. 49A and 49B**.

[**0538**] An alternate example demodulator/modulator facilitation module **3912** is shown in **FIGS. 50 and 51**. A corresponding BOM list is shown in **FIGS. 52A and 52B**.

[**0539**] **FIG. 52C** illustrates an exemplary demodulator/modulator facilitation module **5201**. Facilitation module **5201** includes the following: de-spread module **5204**, spread module **5206**, de-modulator **5210**, and modulator **5212**.

[**0540**] For receive, the de-spread module **5204** de-spreads received spread signals **3926** and **3928** using a spreading code **5202**. Separate spreading codes can be used for the I and Q channels as will be understood by those skilled in the arts. The demodulator **5210** uses a signal **5208** to demodulate the de-spread received signals from the de-spread module **5204**, to generate the I baseband signal **3930***a* and the Q baseband signal **3932***a*.

[**0541**] For transmit, the modulator **5212** modulates the I baseband signal **3930***b* and the Q baseband signal **3932***b* using a modulation signal **5208**. The resulting modulated signals are then spread by the spread module **5206**, to generate I spread signal **3942** and Q spread signal **3944**.

[**0542**] In embodiments, the modulation scheme that is utilized is differential binary phase shift keying (DBPSK) or differential quadrature phase shift keying (DQPSK), and is compliant with the various versions of IEEE 802.11. Other modulation schemes could be utilized besides DBPSK or DQPSK, as will understood by those skilled in arts based on the discussion herein.

[**0543**] In embodiments, the spreading code **5202** is a Barker spreading code, and is compliant with the various versions of IEEE 802.11. More specifically, in embodiments, an 11-bit Barker word is utilized for spreading/de-spreading. Other spreading codes could be utilized as will be understood by those skilled in the arts based on the discussion herein.

[**0544**] 7.6 MAC Interface

[**0545**] An example MAC interface **3914** is shown in **FIG. 45**. A corresponding BOM list is shown in **FIGS. 46A and 46B**.

[**0546**] In embodiments, the MAC **3918** and MAC interface **3914** supply the functionality required to provide a reliable delivery mechanism for user data over noisy, and unreliable wireless media. This is done this while also providing advanced LAN services, equal to or beyond those of existing wired LANs.

[**0547**] The first functionality of the MAC is to provide a reliable data delivery service to users of the MAC. Through a frame exchange protocol at the MAC level, the MAC significantly improves on the reliability of data delivery

services over wireless media, as compared to earlier WLANs. More specifically, the MAC implements a frame exchange protocol to allow the source of a frame to determine when the frame has been successfully received at the destination. This frame exchange protocol adds some overhead beyond that of other MAC protocols, like IEEE 802.3, because it is not sufficient to simply transmit a frame and expect that the destination has received it correctly on the wireless media. In addition, it cannot be expected that every station in the WLAN is able to communicate with every other station in the WLAN. If the source does not receive this acknowledgment, then the source will attempt to transmit the frame again. This retransmission of frame by the source effectively reduces the effective error rate of the medium at the cost of additional bandwidth consumption.

[0548] The minimal MAC frame exchange protocol consists of two frames, a frame sent from the source to the destination and an acknowledgment from the destination that the frame was received correctly. The frame and its acknowledgment are an atomic unit of the MAC protocol. As such, they cannot be interrupted by the transmission from any other station. Additionally, a second set of frames may be added to the minimal MAC frame exchange. The two added frames are a request to send frame and a clear to send frame. The source sends a request to send to the destination. The destination returns a clear to send to the source. Each of these frames contains information that allows other stations receiving them to be notified of the upcoming frame transmission, and therefore to delay any transmission their own. The request to send and clear frames serve to announce to all stations in the neighborhood of both the source and the destination about the pending transmission from the source to the destination. When the source receives the clear to send from the destination, the real frame that the source wants delivered to the destination is sent. If the frame is correctly received at the destination, then the destination will return an acknowledgment completing the frame exchange protocol. While this four way frame exchange protocol is a required function of the MAC, it may be disabled by an attribute in the management information base.

[0549] The second functionality of the MAC is to fairly control access to the shared wireless medium. It performs this function through two different access mechanisms: the basic access mechanism, call the distribution coordination system function, and a centrally controlled access mechanism, called the point coordination function.

[0550] The basic access mechanism is a carrier sense multiple access with collision avoidance (CSMA/CA) with binary exponential backoff. This access mechanism is similar to that used for IEEE 802.3, with some variations. CSMA/CA is a "listen before talk". (LBT) access mechanism. In this type of access mechanism, a station will listen to the medium before beginning a transmission. If the medium is already carrying a transmission, then the station that listening will not begin its own transmission. More specifically, if a listening station detects an existing transmission in progress, the listening station enters a transmit deferral period determined by the binary exponential backoff algorithm. The binary exponential backoff mechanism chooses a random number which represents the amount of time that must elapse while there are not any transmission. In other words, the medium is idle before the listening station may attempt to begin its transmission again. The MAC may also implement a network allocation vector (NAV). The NAV is the value that indicates to a station that amount oftime that remains before a medium becomes available. The NAV is kept current through duration values that are transmitted in all frames. By examining the NAV, a station may avoid transmitting, even when the medium does not appear to be carrying a transmission in the physical sense.

[0551] The centrally controlled access mechanism uses a poll and response protocol to eliminate the possibility of contention for the medium. This access mechanism is called the point coordination function (PCF). A point coordinator (PC) controls the PCF. The PC is always located in an AP. Generally, the PCF operates by stations requesting that the PC register them on a polling list, and the PC then regularly polls the stations for traffic while also delivering traffic to the stations. With proper planning, the PCF is able to deliver near isochronous service to the stations on the polling list.

[0552] The third function of the MAC is to protect the data that it delivers. Because it is difficult to contain wireless WLAN signals to a particular physical area, the MAC provides a privacy service, called Wired Equivalent Privacy (WEP), which encrypts the data sent over the wireless medium. The level of encryption chosen approximates the level of protection data might have on a wireless LAN in a building with controlled access that prevents physically connecting to the LAN without authorization.

[0553] 7.7 Control Signal Generator—Synthesizer

[0554] In an embodiment, the control signal generator **3908** is preferably implemented using a synthesizer. An example synthesizer is shown in **FIG. 55**. A corresponding BOM list is shown in **FIGS. 56A and 56B**.

[0555] 7.8 LNA/PA

[0556] An example LNA/PA **3904** is shown in **FIGS. 64 and 65**. A corresponding BOM list is shown in **FIG. 66**.

[0557] Additionally, **FIG. 93** illustrates a LNA/PA module **9301** that is another embodiment of the LNA/PA **3904**. LNA/PA module **9301** includes a switch **9302**, a LNA **9304**, and a PA **9306**. The switch **9302** connects either the LNA **9304** or the PA **9306** to the antenna **3903**, as shown. The switch **9302** can be controlled by an on-board processor that is not shown.

[0558] 8.0 802.11 Physical Layer Configurations

[0559] The 802.11 WLAN standard specifies two RF physical layers: frequency hopped spread spectrum (FHSS) and direct sequence spread spectrum (DSSS). The invention is not limited to these specific examples. Both DSSS and FHSS support 1 Mbps and 2 Mbps data rates and operate in the 2.400-2.835 GHz band for wireless communications in accordance to FCC part **15** and ESTI-300 rules. Additionally, 802.11 has added an 11 Mbps standard that operates at 5 GHz and utilizes OFDM modulation.

[0560] The DSSS configuration supports the 1 MBPS data rate utilizing differential binary phase shift keying (DBPSK) modulation, and supports 2 MBPS utilizing differential quadrature phase shift keying modulation. In embodiments, an 11-bit Barker word is used as the spreading sequence that is utilized by the stations in the 802.11 network. A Barker word has a relatively short sequence, and is known to have

very good correlation properties, and includes the following sequence: +1, −1, +1, +1, −1, +1, +1, +1, −1, −1, −1. The Barker word used for 802.11 is not to be confused with the spreading codes used for code division multiple access (CDMA) and global positioning system (GPS). CDMA and GPS use orthogonal spreading codes, which allow multiple users to operate on the same channel frequency. Generally, CDMA codes have longer sequences and have richer correlation properties.

[**0561**] During transmission, the 11-bit barker word is exclusive-ored (EX-OR) with each of the information bits using a modulo-2 adder, as illustrated by modulo-2 adder **9202** in **FIG. 92**. Referring to **FIG. 92**, the 11-bit (at 11 MBPS) Barker word is applied to a modulo-2 adder together with each one (at 1 MBPS) of the information bits (in the PPDU data). The Ex-OR function combines both signals by performing a modulo-2 addition of each information bit with each Barker bit (or chip). The output of the modulo-2 adder results in a signal with a data rate that is 10× higher than the information rate. The result in the frequency domain signal is a signal that is spread over a wider bandwidth at a reduced RF power level. At the receiver, the DSSS signal is convolved with an 11-bit Barker word and correlated. As shown in **FIG. 92**, the correlation recovers the information bits at the transmitted information rate, and the undesired interfering in-band signals are spread out-of-band. The spreading and despreading of narrowband to wideband signal is commonly referred to as processing gain and is measured in decibels (dB). Processing gain is the ratio of DSSS signal rate information rate. In embodiments, the minimum requirement for processing gain is 10 dB.

[**0562**] The second RF physical layer that is specified by the IEEE 802.11 standard is frequency hopping spread spectrum (FHSS). A set of hop sequences is defined in IEEE 802.11 for use in the 2.4 GHz frequency band. The channels are evenly spaced across the band over a span of 83.5 MHz. During the development of IEEE 802.11, the hop sequences listed in the standard were pre-approved for operation in North America, Europe, and Japan. In North America and Europe (excluding Spain and France), the required number of hop channels is 79. The number of hopped channels for Spain and France is 23 and 35, respectively. In Japan, the required number of hopped channels is 23. The hopped center channels are spaced uniformly across the 2.4 GHz frequency band occupying a bandwidth of 1 MHz. In North America and Europe (excluding Spain and France), the hopped channels operate from 2.402 GHz to 2.480 GHz. In Japan, the hopped channels operate from 2.447 GHz to 2.473 GHz. The modulation scheme called out for FHSS by 802.11 is 2-level Gaussian Phase Shift Keying (GFSK) for the 1 MBps data rate, and 4-level GFSK for the 2 MBps data rate:

[**0563**] In addition to DSSS and FHSS RF layer standards, the IEEE 802.11 Executive Committee approved two projects for higher rate physical layer extensions. The first extension, IEEE 802.11a defines requirements for a physical layer operating in the 5.0 GHz frequency band, and data rates ranging from 6 MBps to 54 MBps. This 802.11a draft standard is based on Orthogonal Frequency Division Multiplexing (OFDM) and uses 48 carriers as a phase reference (so coherent), with 20 MHZ spacing between the channels. The second extension, IEEE 802.1 b, defines a set of physical layer specifications operating in the 2.4 GHz ISM frequency band. This 802.11b utilizes complementary code keying (CCK), and extends the data rate up to 5.5 Mbps and 11 Mbps.

[**0564**] The transmitter and receiver circuits described herein can be operated in all of the WLAN physical layer embodiments described herein, including the DSSS and FHSS embodiments described herein. However, the present invention is not limited to being operated in WLAN physical layer embodiments that were described herein, as the invention could be configured in other physical layer embodiments.

[**0565**] **FIG. 94** illustrates a block diagram of an IEEE 802.11 DSSS radio transceiver **9400** using UFT Zero IF technology. DSSS transceiver **9400** includes: antenna **9402**, switch **9404**, amplifiers **9406** and **9408**, transceivers **9410**, baseband processor **9412**, MAC **9414**, bus interface unit **9416**, and PCMCIA connector **9418**. The DSSS transceiver **9400** includes an IQ receiver **7000** and an IQ transmitter **8000**, which are described herein. UFT technology interfaces directly to the baseband processor **9412** of the physical layer. In the receive path, the IQ receiver **7000** transforms a 2.4 GHz RF signal-of-interest into I/Q analog baseband signals in a single step and passes the signals to the baseband processor **9412**, where the baseband processor is then responsible for de-spreading and demodulating the signal. In embodiments, the IQ receiver **7000** includes all of the circuitry necessary for accommodating AGC, baseband filtering and baseband amplification. In the transmit path, the transmitter **8000** transforms the I/Q analog baseband signals to a 2.4 GHz RF carrier directly in a single step. The signal conversion clock is derived from a single synthesized local oscillator (LO) **9420**. The selection of the clock frequency is determined by choosing a sub-harmonic of the carrier frequency. For example, a 5th harmonic of 490 MHZ was used, which corresponds to a RF channel frequency of 2.450 GHz. Using UFT technology simplifies the requirements and complexity of the synthesizer design.

[**0566**] 9. Appendix

[**0567**] The attached Appendix contained in FIGS. **95**A-C, **96-161**, which forms part of this patent application, includes schematics of an integrated circuit (IC) implementation example of the present-invention. This example embodiment is provided solely for illustrative purposes, and is not limiting. Other embodiments will be apparent to persons skilled in the relevant art(s) based on the teachings herein. **FIG. 95A** illustrates a schematic for a WLAN modulator/demodulator IC according to embodiments of the invention. **FIGS. 95B and 95C** illustrate an expanded view of the circuit in **FIG. 95A**. **FIGS. 96-161** further illustrate detailed circuit schematics of the WLAN modulator/demodulator integrated circuit.

10. Conclusions

[**0568**] Example implementations of the systems and components of the invention have been described herein. As noted elsewhere, these example implementations have been described for illustrative purposes only, and are not limiting. Other implementation embodiments are possible and covered by the invention, such as but not limited to software and software/hardware implementations of the systems and components of the invention. Such implementation embodi-

ments will be apparent to persons skilled in the relevant art(s) based on the teachings contained herein.

[**0569**] While various application embodiments of the present invention have been described above, it should be understood that they have been presented by way of example only, and not limitation. Thus, the breadth and scope of the present invention should not be limited by any of the above-described exemplary embodiments, but should be defined only in accordance with the following claims and their equivalents.

1. A wireless modem apparatus, comprising:

a balanced transmitter for up-converting a baseband signal, including,

an inverter, to receive said baseband signal and generate an inverted baseband signal;

a first controlled switch, coupled to a non-inverting output of said inverter, said first controlled switch to sample said baseband signal according to a first control signal, resulting in a first harmonically rich signal;

a second controlled switch, coupled to an inverting output of said inverter, said second controlled switch to sample said inverted baseband signal according to a second control signal, resulting in a second harmonically rich signal; and

a combiner, coupled to an output of said first controlled switch and an output of said second controlled switch, said combiner to combine said first harmonically rich signal and said second harmonically rich signal, resulting in a third harmonically rich signal.

2-40. (canceled)

* * * * *