UNITED STATES
PATENT AND TRADEMARK OFFICE

P.O. Box 1450
Alexandria, Virginia 22313-1450
www.uspto.gov

ACKNOWLEDGEMENT OF LOSS OF ENTITLEMENT TO ENTITY STATUS DISCOUNT

APPLICATION #	FILING OR 371(C) DATE	FIRST NAMED APPLICANT	ATTORNEY DOCKET #	REQUEST ID
16/907,887	06/22/2020	Gregory G. Raleigh	RALEP025C1C1C1C1	477521

The entity status change request below filed through Patent Center on 09/22/2025 has been accepted.

Certifications

APPLICANT CHANGING TO REGULAR UNDISCOUNTED FEE STATUS

Signature

I certify, in accordance with 37 CFR 1.4(d)(4), that I am one of the signatories making the entity status change.

Signature	Name	Registration #
/Farshad Farjami/	Farshad Farjami	41014

AMAZON-1029
IPR2026-00471

UNITED STATES PATENT AND TRADEMARK OFFICE

UNITED STATES DEPARTMENT OF COMMERCE
United States Patent and Trademark Office
Address: COMMISSIONER FOR PATENTS
P.O. Box 1450
Alexandria, Virginia 22313-1450
www.uspto.gov

APPLICATION NO.	ISSUE DATE	PATENT NO.	ATTORNEY DOCKET NO.	CONFIRMATION NO.
16/907,887	08/02/2022	11405429	RALEP025C1C1C1C1	2653

106963 7590 07/13/2022

Headwater Research LLC
C/O Farjami & Farjami LLP
26522 La Alameda Ave., Suite 360
Mission Viejo, CA 92691

ISSUE NOTIFICATION

The projected patent number and issue date are specified above.

Determination of Patent Term Adjustment under 35 U.S.C. 154 (b)
(application filed on or after May 29, 2000)

The Patent Term Adjustment is 0 day(s). Any patent to issue from the above-identified application will include an indication of the adjustment on the front page.

If a Continued Prosecution Application (CPA) was filed in the above-identified application, the filing date that determines Patent Term Adjustment is the filing date of the most recent CPA.

Applicant will be able to obtain more detailed information by accessing the Patent Application Information Retrieval (PAIR) WEB site (http://pair.uspto.gov).

Any questions regarding the Patent Term Extension or Adjustment determination should be directed to the Office of Patent Legal Administration at (571)-272-7702. Questions relating to issue and publication fee payments should be directed to the Application Assistance Unit (AAU) of the Office of Patents Stakeholder Experience (OPSE), Stakeholder Support Division (SSD) at (571)-272-4200.

INVENTOR(s) (Please see PAIR WEB site http://pair.uspto.gov for additional inventors):

Gregory G. Raleigh, Woodside, CA;

APPLICANT(s) (Please see PAIR WEB site http://pair.uspto.gov for additional applicants):

Headwater Research LLC, Tyler, TX;

The United States represents the largest, most dynamic marketplace in the world and is an unparalleled location for business investment, innovation, and commercialization of new technologies. The USA offers tremendous resources and advantages for those who invest and manufacture goods here. Through SelectUSA, our nation works to encourage and facilitate business investment. To learn more about why the USA is the best country in the world to develop technology, manufacture products, and grow your business, visit SelectUSA.gov.

IR103 (Rev. 10/09)

INFORMATION DISCLOSURE STATEMENT BY APPLICANT (Not for submission under 37 CFR 1.99)		
	Application Number	16907887
	Filing Date	2020-06-22
	First Named Inventor	RALEIGH, GREGORY
	Art Unit	2434
	Examiner Name	KAPLAN, BENJAMIN
	Attorney Docket Number	RALEP025C1C1C1C1

	185	8112435	B2	2012-02-07	Epstein et al.	
	186	8116223		2012-02-14	TIAN, Dan et al.	
	187	8116749		2012-02-14	Proctor Jr., James Arthur et al.	
	188	8116781	B2	2012-02-14	Chen, Xixian et al.	
	189	8122128		2012-02-21	Burke, II, Robert M. et al.	
	190	8122249		2012-02-21	Falk, Rainer et al.	
	191	8125897	B2	2012-02-28	Ray et al.	
	192	8126123		2012-02-28	Cai, Yigang et al.	
	193	8126396	B2	2012-02-28	Bennett, James D.	
	194	8126476	B2	2012-02-28	Vardi, Yosef et al.	
	195	8126722		02/2012 ~~2012-02-28~~	ROBB, Terence Alan et al.	

Change(s) applied to document, /NWS/ 3/28/2022

ALL REFERENCES CONSIDERED EXCEPT WHERE LINED THROUGH. /B.A.K/

INFORMATION DISCLOSURE STATEMENT BY APPLICANT (Not for submission under 37 CFR 1.99)		
	Application Number	16907887
	Filing Date	2020-06-22
	First Named Inventor	RALEIGH, GREGORY
	Art Unit	2434
	Examiner Name	KAPLAN, BENJAMIN
	Attorney Docket Number	RALEP025C1C1C1C1

	53	7058968		2006-06-06	ROWLAND et al.	
	54	7068600		2006-06-27	CAIN, Joseph Bibb	
	55	7069248		2006-06-27	HUBER, Adriano	
	56	7082422	B1	2006-07-25	Zirngibl et al.	
	57	7084775	B1	2006-08-01	Smith, Michael R.	
	58	7092696		2006-08-15	HOSAIN et al.	
	59	7095754	B2	2006-08-22	Benveniste, Mathilde	
	60	7102620	B2	2006-09-05	Harries, Andrew Stanely Guy et al.	
	61	7110753	B2	2006-09-19	Campen, Kenneth Brian	
	62	7113780	B2	2006-09-26	Mckenna Daniel et al.	
	63	7113997		09/2006 ~~2012-09-26~~	Jayapalan, Jay et al.	

Change(s) applied to document, /N.W.S./ 3/28/2022

ALL REFERENCES CONSIDERED EXCEPT WHERE LINED THROUGH. /B.A.K/

INFORMATION DISCLOSURE STATEMENT BY APPLICANT (Not for submission under 37 CFR 1.99)		
	Application Number	16907887
	Filing Date	2020-06-22
	First Named Inventor	RALEIGH, GREGORY
	Art Unit	2434
	Examiner Name	KAPLAN, BENJAMIN
	Attorney Docket Number	RALEP025C1C1C1C1

	69	20040167958	A1	2004-08-26	Stewart et al.	
	70	20040168052		2004-08-26	CLISHAM et al.	
	71	20040170191	A	2004-09-02	Guo et al.	
Change(s) applied to document, /N.W.S./ 3/28/2022	72	20040176104	A	~~1841-03-12~~ 09/2004	Arcens	
	73	20040176104	A1	2004-09-09	Arcens	
	74	20040198331		2004-10-07	COWARD et al.	
	75	20040203755		2004-10-14	BRUNET, Jeffrey et al.	
	76	20040203833	A	2004-10-14	Rathunde, Dale F. et al.	
	77	20040225561	A1	2004-11-11	Hertzberg et al.	
	78	20040225898	A	2004-11-11	Frost, D. et al.	
	79	20040236547		2004-11-25	RAPPAPORT et al.	

UNITED STATES PATENT AND TRADEMARK OFFICE

UNITED STATES DEPARTMENT OF COMMERCE
United States Patent and Trademark Office
Address: COMMISSIONER FOR PATENTS
P.O. Box 1450
Alexandria, Virginia 22313-1450
www.uspto.gov

APPLICATION NO.	FILING DATE	FIRST NAMED INVENTOR	ATTORNEY DOCKET NO.	CONFIRMATION NO.
16/907,887	06/22/2020	Gregory G. Raleigh	RALEP025C1C1C1C1	2653

106963 7590 06/30/2022
Headwater Research LLC
C/O Farjami & Farjami LLP
26522 La Alameda Ave., Suite 360
Mission Viejo, CA 92691

EXAMINER
KAPLAN, BENJAMIN A

ART UNIT	PAPER NUMBER
2434	

NOTIFICATION DATE	DELIVERY MODE
06/30/2022	ELECTRONIC

Please find below and/or attached an Office communication concerning this application or proceeding.

The time period for reply, if any, is set in the attached communication.

Notice of the Office communication was sent electronically on above-indicated "Notification Date" to the following e-mail address(es):

docketing@farjami.com
ffarjami@farjami.com
patent@headwaterllc.com

PTOL-90A (Rev. 04/07)

Response to Rule 312 Communication	Application No.	Applicant(s)	
	16/907,887	Raleigh, Gregory G.	
	Examiner	Art Unit	AIA (FITF) Status
	BENJAMIN A KAPLAN	2434	No

-- The MAILING DATE of this communication appears on the cover sheet with the correspondence address --

1. ☑ The amendment filed on 14 June 2022 under 37 CFR 1.312 has been considered, and has been:

a) ☐ entered.

b) ☑ entered as directed to matters of form not affecting the scope of the invention.

c) ☐ disapproved because the amendment was filed after the payment of the issue fee.

Any amendment filed after the date the issue fee is paid must be accompanied by a petition under 37 CFR 1.313(c)(1) and the required fee to withdraw the application from issue.

d) ☐ disapproved. See explanation below.

e) ☐ entered in part. See explanation below.

f) ☐ not entered because the supplemental or corrected Application Data sheet (ADS)

☐ was not accompanied by a petition to accept an unintentionally delayed claim under 37 CFR 1.55 or 27 CFR 1.78;

☐ did not identify the information being changed in accordance with 37 CFR 1.76(c)(2);

☐ was not properly signed in accordance with 37 CFR 1.76(e) (or 37 CFR 1.33(b) for applications filed prior to September 16, 2012).

/BENJAMIN A KAPLAN/ Examiner, Art Unit 2434	

IN THE UNITED STATES PATENT AND TRADEMARK OFFICE

Applicant(s): **Gregory G. Raleigh**	Group Art Unit: 2434
Application Serial No.: **16/907,887**	Examiner: Kaplan, Benjamin A.
Filed: **6/22/2020**	
Title: **Security Techniques for Device Assisted Services**	

AMENDMENT AFTER NOTICE OF ALLOWANCE UNDER 37 CFR § 1.312

Commissioner for Patents
P.O. Box 1450
Alexandria, VA 22313-1450

Dear Sir/Madam:

This Amendment is pursuant to 37 CFR § 1.312 after Notice of Allowance, dated March 21, 2022, in the above-referenced patent application.

FARJAMI & FARJAMI LLP
AN INTELLECTUAL PROPERTY LAW FIRM

www.farjami.com

26522 La Alameda Avenue, Suite 360
Mission Viejo, California 92691
tel: (949) 282-1000
fax: (949) 282-1002

ELECTRONIC TRANSMISSION COVER SHEET

Date: June 16, 2022

To: United States Patent and Trademark Office
Examiner: Kaplan, Benjamin A.; Art Unit: 2434

Re: **Application Serial No.: 16/907,887**
Filing Date: 6/22/2020; First-Named Inventor: Raleigh
Attorney Docket No.: RALEP025C1C1C1C1

From: Farjami & Farjami LLP

Number of pages including the cover sheet: 5

Message:

Enclosed, please find the Issue Fee.

Credit Card payment in the amount of **$600.00** as the required Issue fee is hereby included with this filing.

Authorization is hereby given to the Commissioner to charge any fees associated with this communication or credit any overpayment to Deposit Account No. **50-0731**.

The documents accompanying this electronic transmission contain PRIVILEGED AND CONFIDENTIAL information intended only for use of the individual or entity named above. If you are not the intended recipient, disclosure, copying, distribution or use of the contents of this electronic transmission information is prohibited. If you have received this electronic transmission in error, please immediately notify us by telephone and return the original electronic transmission to us at the above address via U.S. Postal Service. We will reimburse you for all expenses incurred.

Electronic Patent Application Fee Transmittal

Application Number:	16907887
Filing Date:	22-Jun-2020
Title of Invention:	Security Techniques for Device Assisted Services
First Named Inventor/Applicant Name:	Gregory G. Raleigh
Filer:	Michael Farjami/Evan Gunderman
Attorney Docket Number:	RALEP025C1C1C1C1

Filed as Small Entity

Filing Fees for Utility under 35 USC 111(a)

Description	Fee Code	Quantity	Amount	Sub-Total in USD($)
Basic Filing:				
Pages:				
Claims:				
Miscellaneous-Filing:				
Petition:				
Patent-Appeals-and-Interference:				
Post-Allowance-and-Post-Issuance:				
UTILITY APPL ISSUE FEE	2501	1	600	600

Description	Fee Code	Quantity	Amount	Sub-Total in USD($)
Extension-of-Time:				
Miscellaneous:				
			Total in USD ($)	**600**

Electronic Acknowledgement Receipt	
EFS ID:	45980247
Application Number:	16907887
International Application Number:	
Confirmation Number:	2653
Title of Invention:	Security Techniques for Device Assisted Services
First Named Inventor/Applicant Name:	Gregory G. Raleigh
Customer Number:	106963
Filer:	Michael Farjami/Evan Gunderman
Filer Authorized By:	Michael Farjami
Attorney Docket Number:	RALEP025C1C1C1C1
Receipt Date:	16-JUN-2022
Filing Date:	22-JUN-2020
Time Stamp:	19:22:38
Application Type:	Utility under 35 USC 111(a)

Payment information:

Submitted with Payment	yes
Payment Type	CARD
Payment was successfully received in RAM	$600
RAM confirmation Number	E20226FJ23471758
Deposit Account	500731
Authorized User	Evan Gunderman
The Director of the USPTO is hereby authorized to charge indicated fees and credit any overpayment as follows: 37 CFR 1.16 (National application filing, search, and examination fees) 37 CFR 1.17 (Patent application and reexamination processing fees)	

37 CFR 1.21 (Miscellaneous fees and charges)

File Listing:

Document Number	Document Description	File Name	File Size(Bytes)/ Message Digest	Multi Part /.zip	Pages (if appl.)
1		RALEP025C1C1C1C1_Issue_Fee_June_16_22.pdf	207631 e5a96082babf3bb89e49d04b3f0cf64483b7538e	yes	5
	Multipart Description/PDF files in .zip description				
	Document Description		**Start**	**End**	
	Transmittal Letter		1	1	
	Issue Fee Payment (PTO-85B)		2	5	
Warnings:					
Information:					
2	Fee Worksheet (SB06)	fee-info.pdf	37915 943183ead5b400af81cc13812dcb8ba3ce8c32f1	no	2
Warnings:					
Information:					
		Total Files Size (in bytes):	245546		

This Acknowledgement Receipt evidences receipt on the noted date by the USPTO of the indicated documents, characterized by the applicant, and including page counts, where applicable. It serves as evidence of receipt similar to a Post Card, as described in MPEP 503.

New Applications Under 35 U.S.C. 111
If a new application is being filed and the application includes the necessary components for a filing date (see 37 CFR 1.53(b)-(d) and MPEP 506), a Filing Receipt (37 CFR 1.54) will be issued in due course and the date shown on this Acknowledgement Receipt will establish the filing date of the application.
National Stage of an International Application under 35 U.S.C. 371
If a timely submission to enter the national stage of an international application is compliant with the conditions of 35 U.S.C. 371 and other applicable requirements a Form PCT/DO/EO/903 indicating acceptance of the application as a national stage submission under 35 U.S.C. 371 will be issued in addition to the Filing Receipt, in due course.
New International Application Filed with the USPTO as a Receiving Office
If a new international application is being filed and the international application includes the necessary components for an international filing date (see PCT Article 11 and MPEP 1810), a Notification of the International Application Number and of the International Filing Date (Form PCT/RO/105) will be issued in due course, subject to prescriptions concerning national security, and the date shown on this Acknowledgement Receipt will establish the international filing date of the application.

IN THE UNITED STATES PATENT AND TRADEMARK OFFICE

Applicant(s): **Raleigh**	Group Art Unit: 2434
Application Serial No.: **16/907,887**	Examiner: Kaplan, Benjamin A.
Filed: **6/22/2020**	Notice of Allowance: March 21, 2022
Title: **Security Techniques for Device Assisted Services**	

ISSUE FEE

Mail Stop Issue Fee
Commissioner for Patents
P.O. Box 1450
Alexandria, VA 22313-1450

Dear Sir/Madam:

Enclosed, please find the completed "Issue Fee Transmittal" form and a "**Payment by Credit Card**" in the amount of **$600.00** to cover the issue fee. The drawings filed in the present application have been accepted as formal drawings by the Examiner.

COMMENTS ON STATEMENTS OF REASONS FOR ALLOWANCE

The Applicant recognizes that in accordance with M.P.E.P. § 1302.14, the reasons for allowance provided by the Examiner do not necessarily include all of the reasons why the claims are allowed. The Applicant does not concede that the stated reasons for allowance are the only grounds for patentability of the allowed claims or that any element excluded from the Examiner's Reasons for Allowance is taught or suggested by the art of record.

Further, the Applicant does not concede that all of the elements identified by the Examiner are required to distinguish the prior art of record or to satisfy the requirements of 35 U.S.C. § 112. In addition, the Examiner does not assert, and the Applicant would not agree, that the stated reasons for allowance have any bearing on the patentability of claims in any other applications.

Each dependent claim stands on its own and is allowable based on its own elements or in combination with one or more elements recited in its base claim(s). The combination of elements need not include all of the elements identified in the stated reasons for allowance.

The Commissioner is hereby authorized to charge the required fee(s), any deficiency, or credit any overpayment, to Deposit Account Number **50-0731**.

An early issuance of the present application is respectfully requested.

Respectfully submitted,
Farjami & Farjami LLP

By: */Farshad Farjami/*
Farshad Farjami, Esq.
Reg. No. 41,014

FARJAMI & FARJAMI LLP
26522 La Alameda Ave., Ste. 360
Mission Viejo, CA 92691
Tel: (949) 282-1000
Fax: (949) 282-1002

CERTIFICATE OF ELECTRONIC TRANSMISSION

I hereby certify that this correspondence is being filed via EFS in United States Patent and Trademark Office, on the date stated below.

June 16, 2022
Date

Evan C. Gunderman — Name

/evan c. gunderman/ — Signature

PART B – FEE(S) TRANSMITTAL

Complete and send this form, together with the applicable fee(s), by mail or fax, or via EFS-Web.

By mail, send to: Mail Stop ISSUE FEE
Commissioner for Patents
P.O. Box 1450
Alexandria, VA 22313-1450

By fax, send to: (571) 273-2885

INSTRUCTIONS: This form should be used for transmitting the ISSUE FEE and PUBLICATION FEE (if required). Blocks 1 through 5 should be completed where appropriate. All further correspondence including the Patent, advance orders and notification of maintenance fees will be mailed to the current correspondence address as indicated unless corrected below or directed otherwise in Block 1, by (a) specifying a new correspondence address; and/or (b) indicating a separate "FEE ADDRESS" for maintenance fee notifications.

CURRENT CORRESPONDENCE ADDRESS (Note: Use Block 1 for any change of address)

HEADWATER RESEARCH LLC
c/o Farjami & Farjami LLP
26522 La Alameda Avenue, Suite 360
Mission Viejo, CA 92691

Note: A certificate of mailing can only be used for domestic mailings of the Fee(s) Transmittal. This certificate cannot be used for any other accompanying papers. Each additional paper, such as an assignment or formal drawing, must have its own certificate of mailing or transmission.

Certificate of Mailing or Transmission

I hereby certify that this Fee(s) Transmittal is being deposited with the United States Postal Service with sufficient postage for first class mail in an envelope addressed to the Mail Stop ISSUE FEE address above, or being transmitted to the USPTO via EFS-Web or by facsimile to (571) 273-2885, on the date below.

Evan C. Gunderman	(Typed or printed name)
/Evan C. Gunderman/	(Signature)
June 16, 2022	(Date)

APPLICATION NO	FILING DATE	FIRST NAMED INVENTOR	ATTORNEY DOCKET NO	CONFIRMATION NO
16/907,887	06/22/2020	GREGORY G. RALEIGH	RALEP025C1C1C1C1	2653

TITLE OF INVENTION: Security Techniques for Device Assisted Services

APPLN. TYPE	ENTITY STATUS	ISSUE FEE DUE	PUBLICATION FEE DUE	PREV. PAID ISSUE FEE	TOTAL FEE(S) DUE	DATE DUE
nonprovisional	SMALL	$600	$0	$0	$600	6/21/22

EXAMINER	ART UNIT	CLASS-SUBCLASS
Kaplan, Benjamin	2434	726/001,000

1. Change of correspondence address or indication of "Fee Address" (37 CFR 1.363)

☐ Change of correspondence address (or Change of Correspondence Address form PTO/SB/122) attached.

☐ "Fee Address" indication (or "Fee Address" Indication form PTO/SB/47; Rev 03-09 or more recent) attached. **Use of a Customer Number is required.**

2. For printing on the patent front page, list

(1) The names of up to 3 registered patent attorneys or agents OR, alternatively,

(2) The name of a single firm (having as a member a registered attorney or agent) and the names of up to 2 registered patent attorneys or agents. If no name is listed, no name will be printed.

1. Farjami & Farjami LLP
2.
3.

3. ASSIGNEE NAME AND RESIDENCE DATA TO BE PRINTED ON THE PATENT (print or type)

PLEASE NOTE: Unless an assignee is identified below, no assignee data will appear on the patent. If an assignee is identified below, the document must have been previously recorded, or filed for recordation, as set forth in 37 CFR 3.11 and 37 CFR 3.81(a). Completion of this form is NOT a substitute for filing an assignment.

(A) NAME OF ASSIGNEE	(B) RESIDENCE: (CITY and STATE or COUNTRY)
HEADWATER RESEARCH LLC	TYLER, TEXAS

Please check the appropriate assignee category or categories (will not be printed on the patent): ☐ Individual ☑ Corporation or other private group entity ☐ Government

4a. Fees Submitted: ☑ Issue Fee ☐ Publication Fee (if required) ☐ Advance Order - # of Copies _____

4b. Method of Payment (*Please first reapply any previously paid fee shown above*):

☑ Electronic Payment via EFS-Web ☐ Enclosed check ☐ Non-electronic payment by credit card (Attach form PTO-2038)

☑ The Director is hereby authorized to charge the required fee(s), any deficiency, or credit any overpayment to Deposit Account No. 50-0731

5. Change of Entity Status (from status indicated above)

☐ Applicant certifying micro entity status. See 37 CFR 1.29. NOTE: Absent a valid Certification of Micro Entity Status (see forms PTO/SB/15A and 15B), issue fee payment in the micro entity amount will not be accepted at the risk of application abandonment.

☐ Applicant asserting small entity status. See 37 CFR 1.27. NOTE: If the application was previously under micro entity status, checking this box will be taken as a notification of loss of entitlement to micro entity status.

☐ Applicant changing to regular undiscounted fee status. NOTE: Checking this box will be taken as a notification of loss of entitlement to small or micro entity status, as applicable.

NOTE: This form must be signed in accordance with 37 CFR 1.31 and 1.33. See 37 CFR 1.4 for signature requirements and certifications.

Authorized Signature /Farshad Farjami/ Date June 16, 2022

Typed or printed name Farshad Farjami Registration No. 41,014

Electronic Acknowledgement Receipt

EFS ID:	45956673
Application Number:	16907887
International Application Number:	
Confirmation Number:	2653
Title of Invention:	Security Techniques for Device Assisted Services
First Named Inventor/Applicant Name:	Gregory G. Raleigh
Customer Number:	106963
Filer:	Michael Farjami/Evan Gunderman
Filer Authorized By:	Michael Farjami
Attorney Docket Number:	RALEP025C1C1C1C1
Receipt Date:	14-JUN-2022
Filing Date:	22-JUN-2020
Time Stamp:	19:49:57
Application Type:	Utility under 35 USC 111(a)

Payment information:

Submitted with Payment	no

File Listing:

Document Number	Document Description	File Name	File Size(Bytes)/ Message Digest	Multi Part /.zip	Pages (if appl.)
1		RALEP025C1C1C1C1_Amendment_After_NOA_June_14_22.pdf	54887 7057f0fa7648e5bcc38a5c1d4e695921d7d47471	yes	5

	Multipart Description/PDF files in .zip description		
	Document Description	**Start**	**End**
	Transmittal Letter	1	1
	Amendment after Notice of Allowance (Rule 312)	2	5
Warnings:			
Information:			
	Total Files Size (in bytes):	54887	

This Acknowledgement Receipt evidences receipt on the noted date by the USPTO of the indicated documents, characterized by the applicant, and including page counts, where applicable. It serves as evidence of receipt similar to a Post Card, as described in MPEP 503.

New Applications Under 35 U.S.C. 111
If a new application is being filed and the application includes the necessary components for a filing date (see 37 CFR 1.53(b)-(d) and MPEP 506), a Filing Receipt (37 CFR 1.54) will be issued in due course and the date shown on this Acknowledgement Receipt will establish the filing date of the application.
National Stage of an International Application under 35 U.S.C. 371
If a timely submission to enter the national stage of an international application is compliant with the conditions of 35 U.S.C. 371 and other applicable requirements a Form PCT/DO/EO/903 indicating acceptance of the application as a national stage submission under 35 U.S.C. 371 will be issued in addition to the Filing Receipt, in due course.
New International Application Filed with the USPTO as a Receiving Office
If a new international application is being filed and the international application includes the necessary components for an international filing date (see PCT Article 11 and MPEP 1810), a Notification of the International Application Number and of the International Filing Date (Form PCT/RO/105) will be issued in due course, subject to prescriptions concerning national security, and the date shown on this Acknowledgement Receipt will establish the international filing date of the application.

FARJAMI & FARJAMI LLP
AN INTELLECTUAL PROPERTY LAW FIRM

www.farjami.com

26522 La Alameda Avenue, Suite 360
Mission Viejo, California 92691
tel: (949) 282-1000
fax: (949) 282-1002

ELECTRONIC TRANSMISSION COVER SHEET

Date: June 14, 2022

To: United States Patent and Trademark Office
Examiner: Kaplan, Benjamin A.; Art Unit: 2434

Re: **Application Serial No.: 16/907,887**
Filing Date: 6/22/2020; First-Named Inventor: Raleigh
Attorney Docket No.: RALEP025C1C1C1C1

From: Farjami & Farjami LLP

Number of pages including the cover sheet: 5

Message:

Enclosed, please find the Amendment After Notice of Allowance, dated March 21, 2022.

Authorization is hereby given to the Commissioner to charge any fees associated with this communication or credit any overpayment to Deposit Account **50-0731**.

Thank you.

The documents accompanying this electronic transmission contain PRIVILEGED AND CONFIDENTIAL information intended only for use of the individual or entity named above. If you are not the intended recipient, disclosure, copying, distribution or use of the contents of this electronic transmission information is prohibited. If you have received this electronic transmission in error, please immediately notify us by telephone and return the original electronic transmission to us at the above address via U.S. Postal Service. We will reimburse you for all expenses incurred.

IN THE UNITED STATES PATENT AND TRADEMARK OFFICE

Applicant(s): **Gregory G. Raleigh**	Group Art Unit: 2434
Application Serial No.: **16/907,887**	Examiner: Kaplan, Benjamin A.
Filed: **6/22/2020**	
Title: **Security Techniques for Device Assisted Services**	

AMENDMENT AFTER NOTICE OF ALLOWANCE UNDER 37 CFR § 1.312

Commissioner for Patents
P.O. Box 1450
Alexandria, VA 22313-1450

Dear Sir/Madam:

This Amendment is pursuant to 37 CFR § 1.312 after Notice of Allowance, dated March 21, 2022, in the above-referenced patent application.

In the Claims:

1. (Cancelled)

2. (Currently Amended) A method of operating a wireless end-user device, the method comprising:

connecting from a secure modem subsystem to a wireless cellular network;

connecting a first secure control channel from the secure modem subsystem through the wireless cellular network to a network service controller;

connecting a second secure control channel from a secure execution environment, separately secure from the secure modem subsystem, through the secure modem subsystem and the wireless cellular network to the network service controller;

receiving at the secure execution environment**,** via the second **secure** control channel**,** one or more messages from the network service controller, the one or more messages comprising one or more service policy settings;

storing the one or more service policy settings in a secure memory partition accessible only from the secure execution environment; and

enforcing, at least in part from the secure execution environment, a network service profile comprising the one or more service policy settings, to control the wireless end-user device use of a service on the wireless cellular network.

3. (Currently Amended) The method of claim 2, wherein the network service profile is associated with a service plan that provides for access to the service on the wireless **cellular** network

4. (Previously Presented) The method of claim 2, wherein the secure modem subsystem comprises a modem control link and a modem local channel, and the first secure control channel connects the modem control link to the network service controller through the modem local channel, and wherein the secure execution environment comprises a host service control link, the second secure control channel coupled to the host service control link, the modem local channel providing secure communication between the modem control link and the host service control link.

5. (Currently Amended) The method of claim 2, wherein the secure modem subsystem further comprises a modem agent accessible only by the network service controller through the first **secure** control channel.

6. (Previously Presented) The method of claim 5, wherein the modem agent comprises a service measurement point for use of the service.

7. (Currently Amended) The method of claim 6, further comprising the modem agent communicating a **first** report of the use of the service to the network service controller through the first **secure** control channel.

8. (Currently Amended) The method of claim 7, further comprising the secure execution environment separately communicating a **second** report of the monitored use of the service through the second **secure** control channel.

9. (Previously Presented) The method of claim 2, wherein the one or more service policy settings include an access control setting, a traffic control setting, and/or an admission control setting.

10. (Previously Presented) The method of claim 2, wherein the one or more service policy settings include a network or device management communication setting.

11. (Previously Presented) The method of claim 2, wherein the secure execution environment is implemented at least in part as a hardware partition.

12. (Previously Presented) The method of claim 2, wherein the secure execution environment is implemented at least in part as a software partition.

13. (Previously Presented) The method of claim 2, wherein the secure execution environment is implemented at least in part in a virtual machine executed on a processor.

REMARKS

By the present amendment, Applicant amends claims 2, 3, 5, 7 and 8 to correct a few clerical errors. Applicant respectfully submits that no new matter is added.

Respectfully Submitted,
FARJAMI & FARJAMI LLP

/Farshad Farjami/
Farshad Farjami, Esq.
Reg. No. 41,014

FARJAMI & FARJAMI LLP
26522 La Alameda Ave., Suite 360
Mission Viejo, California 92691
Telephone: (949) 282-1000
Facsimile: (949) 282-1002

CERTIFICATE OF ELECTRONIC TRANSMISSION

I hereby certify that this correspondence is being filed via EFS in United States Patent and Trademark Office, on the date stated below.

June 14, 2022
Date

Evan C. Gunderman
Name

/evan c. gunderman/
Signature

UNITED STATES PATENT AND TRADEMARK OFFICE

UNITED STATES DEPARTMENT OF COMMERCE
United States Patent and Trademark Office
Address: COMMISSIONER FOR PATENTS
P.O. Box 1450
Alexandria, Virginia 22313-1450
www.uspto.gov

NOTICE OF ALLOWANCE AND FEE(S) DUE

106963 7590 03/21/2022
Headwater Research LLC
110 North College Avenue
Suite 1116
Tyler, TX 75702

EXAMINER
KAPLAN, BENJAMIN A

ART UNIT	PAPER NUMBER
2434	

DATE MAILED: 03/21/2022

APPLICATION NO.	FILING DATE	FIRST NAMED INVENTOR	ATTORNEY DOCKET NO.	CONFIRMATION NO.
16/907,887	06/22/2020	Gregory G. Raleigh	RALEP025C1C1C1C1	2653

TITLE OF INVENTION: Security Techniques for Device Assisted Services

APPLN. TYPE	ENTITY STATUS	ISSUE FEE DUE	PUBLICATION FEE DUE	PREV. PAID ISSUE FEE	TOTAL FEE(S) DUE	DATE DUE
nonprovisional	SMALL	$600	$0.00	$0.00	$600	06/21/2022

THE APPLICATION IDENTIFIED ABOVE HAS BEEN EXAMINED AND IS ALLOWED FOR ISSUANCE AS A PATENT. PROSECUTION ON THE MERITS IS CLOSED. THIS NOTICE OF ALLOWANCE IS NOT A GRANT OF PATENT RIGHTS. THIS APPLICATION IS SUBJECT TO WITHDRAWAL FROM ISSUE AT THE INITIATIVE OF THE OFFICE OR UPON PETITION BY THE APPLICANT. SEE 37 CFR 1.313 AND MPEP 1308.

THE ISSUE FEE AND PUBLICATION FEE (IF REQUIRED) MUST BE PAID WITHIN THREE MONTHS FROM THE MAILING DATE OF THIS NOTICE OR THIS APPLICATION SHALL BE REGARDED AS ABANDONED. THIS STATUTORY PERIOD CANNOT BE EXTENDED. SEE 35 U.S.C. 151. THE ISSUE FEE DUE INDICATED ABOVE DOES NOT REFLECT A CREDIT FOR ANY PREVIOUSLY PAID ISSUE FEE IN THIS APPLICATION. IF AN ISSUE FEE HAS PREVIOUSLY BEEN PAID IN THIS APPLICATION (AS SHOWN ABOVE), THE RETURN OF PART B OF THIS FORM WILL BE CONSIDERED A REQUEST TO REAPPLY THE PREVIOUSLY PAID ISSUE FEE TOWARD THE ISSUE FEE NOW DUE.

HOW TO REPLY TO THIS NOTICE:

I. Review the ENTITY STATUS shown above. If the ENTITY STATUS is shown as SMALL or MICRO, verify whether entitlement to that entity status still applies.

If the ENTITY STATUS is the same as shown above, pay the TOTAL FEE(S) DUE shown above.

If the ENTITY STATUS is changed from that shown above, on PART B - FEE(S) TRANSMITTAL, complete section number 5 titled "Change in Entity Status (from status indicated above)".

For purposes of this notice, small entity fees are 1/2 the amount of undiscounted fees, and micro entity fees are 1/2 the amount of small entity fees.

II. PART B - FEE(S) TRANSMITTAL, or its equivalent, must be completed and returned to the United States Patent and Trademark Office (USPTO) with your ISSUE FEE and PUBLICATION FEE (if required). If you are charging the fee(s) to your deposit account, section "4b" of Part B - Fee(s) Transmittal should be completed. If an equivalent of Part B is filed, a request to reapply a previously paid issue fee must be clearly made, and delays in processing may occur due to the difficulty in recognizing the paper as an equivalent of Part B.

III. All communications regarding this application must give the application number. Please direct all communications prior to issuance to Mail Stop ISSUE FEE unless advised to the contrary.

IMPORTANT REMINDER: Maintenance fees are due in utility patents issuing on applications filed on or after Dec. 12, 1980. It is patentee's responsibility to ensure timely payment of maintenance fees when due. More information is available at www.uspto.gov/PatentMaintenanceFees.

PART B - FEE(S) TRANSMITTAL

Complete and send this form, together with applicable fee(s), by mail or fax, or via EFS-Web.

By mail, send to: Mail Stop ISSUE FEE
Commissioner for Patents
P.O. Box 1450
Alexandria, Virginia 22313-1450

By fax, send to: (571)-273-2885

INSTRUCTIONS: This form should be used for transmitting the ISSUE FEE and PUBLICATION FEE (if required). Blocks 1 through 5 should be completed where appropriate. All further correspondence including the Patent, advance orders and notification of maintenance fees will be mailed to the current correspondence address as indicated unless corrected below or directed otherwise in Block 1, by (a) specifying a new correspondence address; and/or (b) indicating a separate "FEE ADDRESS" for maintenance fee notifications.

CURRENT CORRESPONDENCE ADDRESS (Note: Use Block 1 for any change of address)

106963 7590 03/21/2022
Headwater Research LLC
110 North College Avenue
Suite 1116
Tyler, TX 75702

Note: A certificate of mailing can only be used for domestic mailings of the Fee(s) Transmittal. This certificate cannot be used for any other accompanying papers. Each additional paper, such as an assignment or formal drawing, must have its own certificate of mailing or transmission.

Certificate of Mailing or Transmission

I hereby certify that this Fee(s) Transmittal is being deposited with the United States Postal Service with sufficient postage for first class mail in an envelope addressed to the Mail Stop ISSUE FEE address above, or being transmitted to the USPTO via EFS-Web or by facsimile to (571) 273-2885, on the date below.

(Typed or printed name)
(Signature)
(Date)

APPLICATION NO.	FILING DATE	FIRST NAMED INVENTOR	ATTORNEY DOCKET NO.	CONFIRMATION NO.
16/907,887	06/22/2020	Gregory G. Raleigh	RALEP025C1C1C1C1	2653

TITLE OF INVENTION: Security Techniques for Device Assisted Services

APPLN. TYPE	ENTITY STATUS	ISSUE FEE DUE	PUBLICATION FEE DUE	PREV. PAID ISSUE FEE	TOTAL FEE(S) DUE	DATE DUE
nonprovisional	SMALL	$600	$0.00	$0.00	$600	06/21/2022

EXAMINER	ART UNIT	CLASS-SUBCLASS
KAPLAN, BENJAMIN A	2434	726-001000

1. Change of correspondence address or indication of "Fee Address" (37 CFR 1.363).

❑ Change of correspondence address (or Change of Correspondence Address form PTO/AIA/122 or PTO/SB/122) attached.

❑ "Fee Address" indication (or "Fee Address" Indication form PTO/AIA/47 or PTO/SB/47; Rev 03-02 or more recent) attached. **Use of a Customer Number is required.**

2. For printing on the patent front page, list
(1) The names of up to 3 registered patent attorneys or agents OR, alternatively,
(2) The name of a single firm (having as a member a registered attorney or agent) and the names of up to 2 registered patent attorneys or agents. If no name is listed, no name will be printed.

1_____
2_____
3_____

3. ASSIGNEE NAME AND RESIDENCE DATA TO BE PRINTED ON THE PATENT (print or type)

PLEASE NOTE: Unless an assignee is identified below, no assignee data will appear on the patent. If an assignee is identified below, the document must have been previously recorded, or filed for recordation, as set forth in 37 CFR 3.11 and 37 CFR 3.81(a). Completion of this form is NOT a substitute for filing an assignment.

(A) NAME OF ASSIGNEE (B) RESIDENCE: (CITY and STATE OR COUNTRY)

Please check the appropriate assignee category or categories (will not be printed on the patent) : ❑ Individual ❑ Corporation or other private group entity ❑ Government

4a. Fees submitted: ❑Issue Fee ❑Publication Fee (if required) ❑Advance Order - # of Copies _____

4b. Method of Payment: *(Please first reapply any previously paid fee shown above)*

❑ Electronic Payment via EFS-Web ❑ Enclosed check ❑ Non-electronic payment by credit card (Attach form PTO-2038)

❑ The Director is hereby authorized to charge the required fee(s), any deficiency, or credit any overpayment to Deposit Account No. _____

5. **Change in Entity Status** (from status indicated above)

❑ Applicant certifying micro entity status. See 37 CFR 1.29

❑ Applicant asserting small entity status. See 37 CFR 1.27

❑ Applicant changing to regular undiscounted fee status.

NOTE: Absent a valid certification of Micro Entity Status (see forms PTO/SB/15A and 15B), issue fee payment in the micro entity amount will not be accepted at the risk of application abandonment.
NOTE: If the application was previously under micro entity status, checking this box will be taken to be a notification of loss of entitlement to micro entity status.
NOTE: Checking this box will be taken to be a notification of loss of entitlement to small or micro entity status, as applicable.

NOTE: This form must be signed in accordance with 37 CFR 1.31 and 1.33. See 37 CFR 1.4 for signature requirements and certifications.

Authorized Signature _____ Date _____

Typed or printed name _____ Registration No. _____

UNITED STATES PATENT AND TRADEMARK OFFICE

UNITED STATES DEPARTMENT OF COMMERCE
United States Patent and Trademark Office
Address: COMMISSIONER FOR PATENTS
P.O. Box 1450
Alexandria, Virginia 22313-1450
www.uspto.gov

APPLICATION NO.	FILING DATE	FIRST NAMED INVENTOR	ATTORNEY DOCKET NO.	CONFIRMATION NO.
16/907,887	06/22/2020	Gregory G. Raleigh	RALEP025C1C1C1C1	2653

106963 7590 03/21/2022
Headwater Research LLC
110 North College Avenue
Suite 1116
Tyler, TX 75702

EXAMINER
KAPLAN, BENJAMIN A

ART UNIT	PAPER NUMBER
2434	

DATE MAILED: 03/21/2022

Determination of Patent Term Adjustment under 35 U.S.C. 154 (b)
(Applications filed on or after May 29, 2000)

The Office has discontinued providing a Patent Term Adjustment (PTA) calculation with the Notice of Allowance.

Section 1(h)(2) of the AIA Technical Corrections Act amended 35 U.S.C. 154(b)(3)(B)(i) to eliminate the requirement that the Office provide a patent term adjustment determination with the notice of allowance. See Revisions to Patent Term Adjustment, 78 Fed. Reg. 19416, 19417 (Apr. 1, 2013). Therefore, the Office is no longer providing an initial patent term adjustment determination with the notice of allowance. The Office will continue to provide a patent term adjustment determination with the Issue Notification Letter that is mailed to applicant approximately three weeks prior to the issue date of the patent, and will include the patent term adjustment on the patent. Any request for reconsideration of the patent term adjustment determination (or reinstatement of patent term adjustment) should follow the process outlined in 37 CFR 1.705.

Any questions regarding the Patent Term Extension or Adjustment determination should be directed to the Office of Patent Legal Administration at (571)-272-7702. Questions relating to issue and publication fee payments should be directed to the Customer Service Center of the Office of Patent Publication at 1-(888)-786-0101 or (571)-272-4200.

OMB Clearance and PRA Burden Statement for PTOL-85 Part B

The Paperwork Reduction Act (PRA) of 1995 requires Federal agencies to obtain Office of Management and Budget approval before requesting most types of information from the public. When OMB approves an agency request to collect information from the public, OMB (i) provides a valid OMB Control Number and expiration date for the agency to display on the instrument that will be used to collect the information and (ii) requires the agency to inform the public about the OMB Control Number's legal significance in accordance with 5 CFR 1320.5(b).

The information collected by PTOL-85 Part B is required by 37 CFR 1.311. The information is required to obtain or retain a benefit by the public which is to file (and by the USPTO to process) an application. Confidentiality is governed by 35 U.S.C. 122 and 37 CFR 1.14. This collection is estimated to take 30 minutes to complete, including gathering, preparing, and submitting the completed application form to the USPTO. Time will vary depending upon the individual case. Any comments on the amount of time you require to complete this form and/or suggestions for reducing this burden, should be sent to the Chief Information Officer, U.S. Patent and Trademark Office, U.S. Department of Commerce, P.O. Box 1450, Alexandria, Virginia 22313-1450. DO NOT SEND FEES OR COMPLETED FORMS TO THIS ADDRESS. SEND TO: Commissioner for Patents, P.O. Box 1450, Alexandria, Virginia 22313-1450. Under the Paperwork Reduction Act of 1995, no persons are required to respond to a collection of information unless it displays a valid OMB control number.

Privacy Act Statement

The Privacy Act of 1974 (P.L. 93-579) requires that you be given certain information in connection with your submission of the attached form related to a patent application or patent. Accordingly, pursuant to the requirements of the Act, please be advised that: (1) the general authority for the collection of this information is 35 U.S.C. 2(b)(2); (2) furnishing of the information solicited is voluntary; and (3) the principal purpose for which the information is used by the U.S. Patent and Trademark Office is to process and/or examine your submission related to a patent application or patent. If you do not furnish the requested information, the U.S. Patent and Trademark Office may not be able to process and/or examine your submission, which may result in termination of proceedings or abandonment of the application or expiration of the patent.

The information provided by you in this form will be subject to the following routine uses:

1. The information on this form will be treated confidentially to the extent allowed under the Freedom of Information Act (5 U.S.C. 552) and the Privacy Act (5 U.S.C 552a). Records from this system of records may be disclosed to the Department of Justice to determine whether disclosure of these records is required by the Freedom of Information Act.
2. A record from this system of records may be disclosed, as a routine use, in the course of presenting evidence to a court, magistrate, or administrative tribunal, including disclosures to opposing counsel in the course of settlement negotiations.
3. A record in this system of records may be disclosed, as a routine use, to a Member of Congress submitting a request involving an individual, to whom the record pertains, when the individual has requested assistance from the Member with respect to the subject matter of the record.
4. A record in this system of records may be disclosed, as a routine use, to a contractor of the Agency having need for the information in order to perform a contract. Recipients of information shall be required to comply with the requirements of the Privacy Act of 1974, as amended, pursuant to 5 U.S.C. 552a(m).
5. A record related to an International Application filed under the Patent Cooperation Treaty in this system of records may be disclosed, as a routine use, to the International Bureau of the World Intellectual Property Organization, pursuant to the Patent Cooperation Treaty.
6. A record in this system of records may be disclosed, as a routine use, to another federal agency for purposes of National Security review (35 U.S.C. 181) and for review pursuant to the Atomic Energy Act (42 U.S.C. 218(c)).
7. A record from this system of records may be disclosed, as a routine use, to the Administrator, General Services, or his/her designee, during an inspection of records conducted by GSA as part of that agency's responsibility to recommend improvements in records management practices and programs, under authority of 44 U.S.C. 2904 and 2906. Such disclosure shall be made in accordance with the GSA regulations governing inspection of records for this purpose, and any other relevant (i.e., GSA or Commerce) directive. Such disclosure shall not be used to make determinations about individuals.
8. A record from this system of records may be disclosed, as a routine use, to the public after either publication of the application pursuant to 35 U.S.C. 122(b) or issuance of a patent pursuant to 35 U.S.C. 151. Further, a record may be disclosed, subject to the limitations of 37 CFR 1.14, as a routine use, to the public if the record was filed in an application which became abandoned or in which the proceedings were terminated and which application is referenced by either a published application, an application open to public inspection or an issued patent.
9. A record from this system of records may be disclosed, as a routine use, to a Federal, State, or local law enforcement agency, if the USPTO becomes aware of a violation or potential violation of law or regulation.

Notice of Allowability	Application No. 16/907,887	Applicant(s) Raleigh, Gregory G.	
	Examiner BENJAMIN A KAPLAN	Art Unit 2434	AIA (FITF) Status No

-- The MAILING DATE of this communication appears on the cover sheet with the correspondence address--

All claims being allowable, PROSECUTION ON THE MERITS IS (OR REMAINS) CLOSED in this application. If not included herewith (or previously mailed), a Notice of Allowance (PTOL-85) or other appropriate communication will be mailed in due course. **THIS NOTICE OF ALLOWABILITY IS NOT A GRANT OF PATENT RIGHTS.** This application is subject to withdrawal from issue at the initiative of the Office or upon petition by the applicant. See 37 CFR 1.313 and MPEP 1308.

1. ☑ This communication is responsive to communications filed 23 February 2022.
   ☐ A declaration(s)/affidavit(s) under **37 CFR 1.130(b)** was/were filed on _____.

2. ☐ An election was made by the applicant in response to a restriction requirement set forth during the interview on _____; the restriction requirement and election have been incorporated into this action.

3. ☑ The allowed claim(s) is/are 2-13 . As a result of the allowed claim(s), you may be eligible to benefit from the **Patent Prosecution Highway** program at a participating intellectual property office for the corresponding application. For more information, please see **http://www.uspto.gov/patents/init_events/pph/index.jsp** or send an inquiry to **PPHfeedback@uspto.gov.**

4. ☐ Acknowledgment is made of a claim for foreign priority under 35 U.S.C. § 119(a)-(d) or (f).

   Certified copies:

   a) ☐ All b) ☐ Some* c) ☐ None of the:

   1. ☐ Certified copies of the priority documents have been received.
   2. ☐ Certified copies of the priority documents have been received in Application No. _____ .
   3. ☐ Copies of the certified copies of the priority documents have been received in this national stage application from the International Bureau (PCT Rule 17.2(a)).

   * Certified copies not received: _____ .

Applicant has THREE MONTHS FROM THE "MAILING DATE" of this communication to file a reply complying with the requirements noted below. Failure to timely comply will result in ABANDONMENT of this application.
THIS THREE-MONTH PERIOD IS NOT EXTENDABLE.

5. ☐ CORRECTED DRAWINGS (as "replacement sheets") must be submitted.
   ☐ including changes required by the attached Examiner's Amendment / Comment or in the Office action of Paper No./Mail Date _____ .

   Identifying indicia such as the application number (see 37 CFR 1.84(c)) should be written on the drawings in the front (not the back) of each sheet. Replacement sheet(s) should be labeled as such in the header according to 37 CFR 1.121(d).

6. ☐ DEPOSIT OF and/or INFORMATION about the deposit of BIOLOGICAL MATERIAL must be submitted. Note the attached Examiner's comment regarding REQUIREMENT FOR THE DEPOSIT OF BIOLOGICAL MATERIAL.

Attachment(s)

1. ☐ Notice of References Cited (PTO-892)
2. ☑ Information Disclosure Statements (PTO/SB/08), Paper No./Mail Date 12/21/2021.
3. ☐ Examiner's Comment Regarding Requirement for Deposit of Biological Material _____.
4. ☐ Interview Summary (PTO-413), Paper No./Mail Date. _____.
5. ☐ Examiner's Amendment/Comment
6. ☑ Examiner's Statement of Reasons for Allowance
7. ☐ Other _____.

/BENJAMIN A KAPLAN/
Examiner, Art Unit 2434

Notice of Pre-AIA or AIA Status

The present application is being examined under the pre-AIA first to invent provisions.

Allowable Subject Matter

On 21 December 2021 an Electronic Terminal Disclaimer was filed and approved with regards to conflicting U.S. Patent No. 10,694,385. The issue of Double Patenting has been resolved.

The prior art of record does not teach the secure modem subsystem connecting to the secure execution environment, the secure memory partition accessible only from the secure execution environment, and the modem control link to connect securely to the network service controller through a second control channel.

United States Patent No.: US 8,453,227 B2 (Aiello et al.) and United states Patent Application Publication No.: US 2009/0298478 A1 (Tyhurst et al.) show methods of managing a similar environment but do not individually antedate or in combination with the other art of record render obvious the claimed invention.

Claims 2-13 are allowed.

Conclusion

Any inquiry concerning this communication or earlier communications from the examiner should be directed to BENJAMIN A KAPLAN whose telephone number is (571)270-3170. The examiner can normally be reached on 9:00 a.m. - 5:00 p.m..

Examiner interviews are available via telephone, in-person, and video conferencing using a USPTO supplied web-based collaboration tool. To schedule an interview, applicant is encouraged to use the USPTO Automated Interview Request (AIR) at http://www.uspto.gov/interviewpractice.

If attempts to reach the examiner by telephone are unsuccessful, the examiner's supervisor, Kambiz Zand can be reached on (571)272-3811. The fax phone number for the organization where this application or proceeding is assigned is 571-273-8300.

Information regarding the status of an application may be obtained from the Patent Application Information Retrieval (PAIR) system. Status information for published applications may be obtained from either Private PAIR or Public PAIR. Status information for unpublished applications is available through Private PAIR only. For more information about the PAIR system, see https://ppair-my.uspto.gov/pair/PrivatePair. Should you have questions on access to the Private PAIR system, contact the Electronic Business Center (EBC) at 866-217-9197 (toll-free). If you would like assistance from a USPTO Customer Service Representative or access to the automated information system, call 800-786-9199 (IN USA OR CANADA) or 571-272-1000.

/BENJAMIN A KAPLAN/
Examiner, Art Unit 2434

Issue Classification	Application/Control No.	Applicant(s)/Patent Under Reexamination
	16/907,887	Raleigh, Gregory G.
	Examiner	**Art Unit**
	BENJAMIN A KAPLAN	2434

CPC

Symbol					Type	Version
H04L	/	63	/	20	F	2013-01-01
G06Q	/	10	/	06375	I	2013-01-01
G06Q	/	20	/	102	I	2013-01-01
G06Q	/	20	/	20	I	2013-01-01
G06Q	/	20	/	40	I	2013-01-01
G06Q	/	30	/	0207	I	2013-01-01
G06Q	/	30	/	0283	I	2013-01-01
G06Q	/	30	/	0284	I	2013-01-01
G06Q	/	30	/	04	I	2013-01-01
G06Q	/	30	/	0601	I	2013-01-01
G06Q	/	40	/	00	I	2013-01-01
H04L	/	12	/	14	I	2013-01-01
H04L	/	41	/	0893	I	2013-01-01
H04M	/	15	/	00	I	2013-01-01
H04M	/	15	/	58	I	2013-01-01
H04L	/	67	/	327	I	2013-01-01
H04L	/	67	/	26	I	2013-01-01
H04W	/	88	/	08	I	2013-01-01
H04L	/	63	/	0236	I	2013-01-01
H04L	/	67	/	306	I	2013-01-01
G06Q	/	40	/	12	I	2013-01-01
H04W	/	4	/	50	I	2018-02-01
H04W	/	12	/	037	I	2021-01-01
H04L	/	41	/	5003	I	2013-01-01
H04W	/	4	/	24	I	2013-01-01
G06F	/	15	/	177	I	2013-01-01
G06Q	/	30	/	0241	I	2013-01-01
H04L	/	9	/	32	I	2013-01-01
H04L	/	63	/	10	I	2013-01-01
H04W	/	28	/	02	I	2013-01-01
H04W	/	12	/	08	I	2013-01-01

NONE (Assistant Examiner)	(Date)	**Total Claims Allowed:** 12	
/BENJAMIN A KAPLAN/ Examiner, Art Unit 2434 (Primary Examiner)	11 March 2022 (Date)	O.G. Print Claim(s) 2	O.G. Print Figure 1

U.S. Patent and Trademark Office

Part of Paper No.: 20220311

Issue Classification	Application/Control No.	Applicant(s)/Patent Under Reexamination
	16/907,887	Raleigh, Gregory G.
	Examiner	**Art Unit**
	BENJAMIN A KAPLAN	2434

CPC

Symbol					Type	Version
H04L	/	47	/	2408	I	2013-01-01
H04L	/	63	/	08	I	2013-01-01
H04W	/	8	/	20	I	2013-01-01
H04W	/	28	/	12	I	2013-01-01
H04W	/	48	/	14	I	2013-01-01
H04W	/	4	/	20	I	2013-01-01
H04W	/	12	/	00	I	2013-01-01
H04M	/	15	/	88	I	2013-01-01
H04W	/	28	/	0268	I	2013-01-01
H04M	/	15	/	61	I	2013-01-01
H04W	/	24	/	08	I	2013-01-01
H04W	/	12	/	02	I	2013-01-01
H04L	/	51	/	046	I	2013-01-01
H04L	/	63	/	0428	I	2013-01-01
H04W	/	4	/	12	I	2013-01-01
H04W	/	4	/	18	I	2013-01-01
H04W	/	8	/	18	I	2013-01-01
H04W	/	72	/	0453	I	2013-01-01
H04L	/	47	/	20	I	2013-01-01
H04W	/	28	/	0215	I	2013-01-01
H04W	/	4	/	02	I	2013-01-01
G06Q	/	10	/	06315	I	2013-01-01
H04L	/	41	/	0806	I	2013-01-01
H04L	/	41	/	5054	I	2013-01-01
H04M	/	15	/	80	I	2013-01-01
H04L	/	63	/	04	I	2013-01-01
H04L	/	9	/	3247	I	2013-01-01
H04L	/	63	/	0892	I	2013-01-01
H04L	/	67	/	145	I	2013-01-01
H04W	/	12	/	06	I	2013-01-01
H04L	/	63	/	0853	I	2013-01-01

NONE (Assistant Examiner)	(Date)	**Total Claims Allowed:** 12	
/BENJAMIN A KAPLAN/ Examiner, Art Unit 2434 (Primary Examiner)	11 March 2022 (Date)	O.G. Print Claim(s) 2	O.G. Print Figure 1

U.S. Patent and Trademark Office

Part of Paper No.: 20220311

Issue Classification	Application/Control No.	Applicant(s)/Patent Under Reexamination
	16/907,887	Raleigh, Gregory G.
	Examiner	**Art Unit**
	BENJAMIN A KAPLAN	2434

CPC

Symbol					Type	Version
H04W	/	48	/	16	I	2013-01-01
H04L	/	41	/	5025	A	2013-01-01
H04M	/	2215	/	0188	A	2013-01-01
H04L	/	67	/	34	A	2013-01-01
H04L	/	67	/	2819	A	2013-01-01
H04W	/	8	/	02	A	2013-01-01
Y02P	/	90	/	80	A	2015-11-01
H04W	/	84	/	04	A	2013-01-01
H04W	/	84	/	12	A	2013-01-01
H04W	/	88	/	06	A	2013-01-01
H04W	/	84	/	042	A	2013-01-01
H04L	/	41	/	0876	A	2013-01-01

CPC Combination Sets

Symbol					Type	Set	Ranking	Version
	/		/					

NONE (Assistant Examiner)	(Date)	**Total Claims Allowed:** 12	
/BENJAMIN A KAPLAN/ Examiner, Art Unit 2434 (Primary Examiner)	11 March 2022 (Date)	O.G. Print Claim(s) 2	O.G. Print Figure 1

U.S. Patent and Trademark Office

Part of Paper No.: 20220311

Issue Classification	Application/Control No.	Applicant(s)/Patent Under Reexamination
	16/907,887	Raleigh, Gregory G.
	Examiner	**Art Unit**
	BENJAMIN A KAPLAN	2434

INTERNATIONAL CLASSIFICATION				
CLAIMED				
H04L9/40	/	9	/	40
G06Q10/06	/	10	/	06
G06Q20/10	/	20	/	10
G06Q20/20	/	20	/	20
G06Q20/40	/	20	/	40
G06Q30/02	/	30	/	02
G06Q30/04	/	30	/	04
G06Q30/06	/	30	/	06
G06Q40/00	/	40	/	00
H04L12/14	/	12	/	14
H04L41/0893	/	41	/	0893
H04M15/00	/	15	/	00
H04L67/63	/	67	/	63
H04L67/55	/	67	/	55
H04W88/08	/	88	/	08
H04L67/306	/	67	/	306
H04W4/50	/	4	/	50
H04W12/037	/	12	/	037
H04L41/5003	/	41	/	5003
H04W4/24	/	4	/	24
G06F15/177	/	15	/	177
H04L9/32	/	9	/	32
H04W28/02	/	28	/	02
H04W12/08	/	12	/	08
H04L47/2408	/	47	/	2408
H04W8/20	/	8	/	20
H04W28/12	/	28	/	12
H04W48/14	/	48	/	14
H04W4/20	/	4	/	20
H04W12/00	/	12	/	00
H04W24/08	/	24	/	08

NONE (Assistant Examiner)	(Date)	**Total Claims Allowed:** 12	
/BENJAMIN A KAPLAN/ Examiner, Art Unit 2434 (Primary Examiner)	11 March 2022 (Date)	O.G. Print Claim(s) 2	O.G. Print Figure 1

U.S. Patent and Trademark Office

Part of Paper No.: 20220311

Issue Classification	Application/Control No.	Applicant(s)/Patent Under Reexamination
	16/907,887	Raleigh, Gregory G.
	Examiner	**Art Unit**
	BENJAMIN A KAPLAN	2434

INTERNATIONAL CLASSIFICATION				
CLAIMED				
H04W12/02	/	12	/	02
H04L51/046	/	51	/	046
H04W4/12	/	4	/	12
H04W4/18	/	4	/	18
H04W8/18	/	8	/	18
H04W72/04	/	72	/	04
H04L47/20	/	47	/	20
H04W4/02	/	4	/	02
H04L41/0806	/	41	/	0806
H04L41/5054	/	41	/	5054
H04L67/145	/	67	/	145
H04W12/06	/	12	/	06
H04W48/16	/	48	/	16

NON-CLAIMED				
H04L41/5025	/	41	/	5025
H04L67/00	/	67	/	00
H04L67/564	/	67	/	564
H04W8/02	/	8	/	02
H04W84/04	/	84	/	04
H04W84/12	/	84	/	12
H04W88/06	/	88	/	06
H04L41/08	/	41	/	08

US ORIGINAL CLASSIFICATION	
CLASS	**SUBCLASS**
726	1

CROSS REFERENCES(S)						
CLASS	**SUBCLASS (ONE SUBCLASS PER BLOCK)**					

NONE (Assistant Examiner)	(Date)	**Total Claims Allowed:** 12	
/BENJAMIN A KAPLAN/ Examiner, Art Unit 2434 (Primary Examiner)	11 March 2022 (Date)	O.G. Print Claim(s) 2	O.G. Print Figure 1

U.S. Patent and Trademark Office

Part of Paper No.: 20220311

Issue Classification	Application/Control No.	Applicant(s)/Patent Under Reexamination
	16/907,887	Raleigh, Gregory G.
	Examiner	**Art Unit**
	BENJAMIN A KAPLAN	2434

☐ Claims renumbered in the same order as presented by applicant ☐ CPA ☑ T.D. ☐ R.1.47

CLAIMS

Final	Original	Final	Original	Final	Original	Final	Original	Final	Original	Final	Original	Final	Original	Final	Original
	1	9	10												
1	2	10	11												
2	3	11	12												
3	4	12	13												
4	5														
5	6														
6	7														
7	8														
8	9														

NONE		Total Claims Allowed:	
(Assistant Examiner)	(Date)	12	
/BENJAMIN A KAPLAN/ Examiner, Art Unit 2434	11 March 2022	O.G. Print Claim(s)	O.G. Print Figure
(Primary Examiner)	(Date)	2	1

Search Notes	Application/Control No.	Applicant(s)/Patent Under Reexamination
	16/907,887	Raleigh, Gregory G.
	Examiner	**Art Unit**
	BENJAMIN A KAPLAN	2434

CPC - Searched*		
Symbol	**Date**	**Examiner**
G06F 15/177	03/11/2022	BK
G06Q 10/06315, 10/06375, 20/102, 20/20, 20/32, 20/40, 30/0207, 30/0241, 30/0283, 30/0284, 30/04, 30/0601, 40/00, 40/12	03/11/2022	BK
H04L 12/14, 12/1407, 41/0806, 41/0876, 41/0893, 41/5003, 41/5025, 41/5054, 47/20, 47/2408, 51/046, 63/0236, 63/04, 63/0428, 63/08, 63/0853, 63/0892, 63/10, 63/20, 67/145, 67/26, 67/2819, 67/306, 67/327, 67/34, 9/32, 9/3247	03/11/2022	BK
H04M 15/00, 15/49, 15/58, 15/61, 15/66, 15/80, 15/8055, 15/88, 2215/0188	03/11/2022	BK
H04W 12/00, 12/02, 12/037, 12/06, 12/08, 24/08, 28/02, 28/0215, 28/0268, 28/12, 4/02, 4/12, 4/18, 4/20, 4/24, 4/50, 48/14, 48/16, 72/0453, 8/02, 8/18, 8/20, 84/04, 84/042, 84/12, 88/06, 88/08	03/11/2022	BK
Y02P 90/80	03/11/2022	BK

CPC Combination Sets - Searched*		
Symbol	**Date**	**Examiner**

US Classification - Searched*			
Class	**Subclass**	**Date**	**Examiner**
726	1	03/11/2022	BK

* See search history printout included with this form or the SEARCH NOTES box below to determine the scope of the search.

Search Notes		
Search Notes	**Date**	**Examiner**
EAST, Google, Inventor Search, Assignee Search	06/19/2021	BK
PE2E, Inventor Search, Assignee Search	03/11/2022	BK

Search Notes	Application/Control No.	Applicant(s)/Patent Under Reexamination
	16/907,887	Raleigh, Gregory G.
	Examiner	**Art Unit**
	BENJAMIN A KAPLAN	2434

Interference Search			
US Class/CPC Symbol	**US Subclass/CPC Group**	**Date**	**Examiner**
G06F	15/177	03/11/2022	BK
G06Q	10/06315, 10/06375, 20/102, 20/20, 20/32, 20/40, 30/0207, 30/0241, 30/0283, 30/0284, 30/04, 30/0601, 40/00, 40/12	03/11/2022	BK
H04L	12/14, 12/1407, 41/0806, 41/0876, 41/0893, 41/5003, 41/5025, 41/5054, 47/20, 47/2408, 51/046, 63/0236, 63/04, 63/0428, 63/08, 63/0853, 63/0892, 63/10, 63/20, 67/145, 67/26, 67/2819, 67/306, 67/327, 67/34, 9/32, 9/3247	03/11/2022	BK
H04M	15/00, 15/49, 15/58, 15/61, 15/66, 15/80, 15/8055, 15/88, 2215/0188	03/11/2022	BK
H04W	12/00, 12/02, 12/037, 12/06, 12/08, 24/08, 28/02, 28/0215, 28/0268, 28/12, 4/02, 4/12, 4/18, 4/20, 4/24, 4/50, 48/14, 48/16, 72/0453, 8/02, 8/18, 8/20, 84/04, 84/042, 84/12, 88/06, 88/08	03/11/2022	BK
Y02P	90/80	03/11/2022	BK

Index of Claims	Application/Control No.	Applicant(s)/Patent Under Reexamination
	16/907,887	Raleigh, Gregory G.
	Examiner	**Art Unit**
	BENJAMIN A KAPLAN	2434

✓	Rejected	-	Cancelled	N	Non-Elected	A	Appeal
=	Allowed	÷	Restricted	I	Interference	O	Objected

CLAIMS

☐ Claims renumbered in the same order as presented by applicant ☐ CPA ☑ T.D. ☐ R.1.47

CLAIM		DATE								
Final	Original	06/19/2021	03/11/2022							
	1	-								
1	2	✓	=							
2	3	✓	=							
3	4	✓	=							
4	5	✓	=							
5	6	✓	=							
6	7	✓	=							
7	8	✓	=							
8	9	✓	=							
9	10	✓	=							
10	11	✓	=							
11	12	✓	=							
12	13	✓	=							

PE2E SEARCH - Search History (Prior Art)

Ref #	Hits	Search Query	DBs	Default Operator	Plurals	British Equivalents	Time Stamp
L1	1	16/034,362.app.	(US-PGPUB; USPAT)	AND	OFF	OFF	2019/06/24 12:14 AM
L2	2	(("20060026679") or ("20080127304")).PN.	(US-PGPUB; USPAT; USOCR)	AND	OFF	OFF	2019/06/24 01:34 AM
L3	2	12/694,445.app.	(US-PGPUB; USPAT)	AND	OFF	OFF	2019/06/24 01:49 AM
L4	7094	(726/1).CCLS.	(US-PGPUB; USPAT; USOCR)	AND	OFF	OFF	2019/06/24 02:06 AM
L5	275642	(G06Q10/06375 H04W12/0017 G06Q20/20 G06Q20/40 G06Q30/0207 G06Q30/0283 G06Q30/0284 G06Q30/04 G06Q30/0601 G06Q40/00 H04L12/14 H04L41/0893 H04L41/5003 H04M15/00 H04M15/58 H04W4/24 G06F15/177 G06Q30/0241 H04L9/32 H04L67/306 H04W28/02 H04W12/08 H04L47/2408 G06Q40/12 H04W8/20 H04W28/12 H04W48/14 H04M15/88 H04W28/0268 H04W88/08 H04M15/61 H04W24/08 H04L63/0236 H04L51/046 H04W4/12 H04W8/18 H04W72/0453 H04L47/20 H04W28/0215 G06Q10/06315 H04L41/0806 H04L41/5054 H04M15/80 H04L63/0853 H04L67/327 H04L9/3247 H04L63/0892 H04L67/145 H04W12/06 H04L67/26 H04W48/16 H04W4/50 G06Q20/102).cpc.	(US-PGPUB; USPAT)	OR	OFF	OFF	2019/06/24 02:07 AM
L6	281319	L4 or L5	(US-PGPUB; USPAT)	AND	OFF	OFF	2019/06/24

							02:08 AM
L7	97958	L6 @ad<"20090213"	(US-PGPUB; USPAT)	AND	OFF	OFF	2019/06/24 02:08 AM
L8	457	(Raleigh Gregory G).in.	(US-PGPUB; USPAT)	AND	OFF	OFF	2019/06/24 02:10 AM
L9	216345	secure environment @ad<"20090213"	(US-PGPUB; USPAT)	AND	OFF	OFF	2019/06/24 02:15 AM
L10	28161	secure environment service profile @ad<"20090213"	(US-PGPUB; USPAT)	AND	OFF	OFF	2019/06/24 02:16 AM
L11	16959	secure environment service profile monitor @ad<"20090213"	(US-PGPUB; USPAT)	AND	OFF	OFF	2019/06/24 02:16 AM
L12	200	("20010048738"|"20010053694"|"20020013844"|"20020022472"|"20020022483"|"20020049074"|"20020099848"|"20020116338"|"20020120370"|"20020120540"|"20020131404"|"20020138599"|"20020138601"|"20020154751"|"20020161601"|"20020164983"|"20020176377"|"20020188732"|"20020191573"|"20020199001"|"20030004937"|"20030005112"|"20030013434"|"20030018524"|"20030028623"|"20030046396"|"20030050070"|"20030050837"|"20030084321"|"20030088671"|"20030133408"|"20030134650"|"20030159030"|"20030161265"|"20030171112"|"20030182420"|"20030182435"|"20030184793"|"20030188006"|"20030188117"|"20030220984"|"20030224781"|"20030229900"|"20030233332"|"20030236745"|"20040019539"|"20040019564"|"20040021697"|"20040024756"|"20040030705"|"20040039792"|"20040044623"|"20040047358"|"20040054779"|"20040073672"|"20040082346"|"20040098715"|"20040102182"|"20040103193"|"20040107360"|"20040116140"|"20040127200"|"2004012720	(US-PGPUB; USPAT)	AND	OFF	OFF	2020/01/06 04:54 AM

		8"|"20040127256"|"200 40132427"|"200401336 68"|"20040137890"|"20 040165596"|"20040167 958"|"20040168052"|"2 0040170191"|"2004017 6104"|"20040198331"|" 20040203755"|"200402 03833"|"20040225561"| "20040225898"|"20040 236547"|"20040243680 "|"20040243992"|"2004 0249918"|"2004025514 5"|"20040259534"|"200 40260766"|"200402678 72"|"20050007993"|"20 050009499"|"20050021 995"|"20050041617"|"2 0050048950"|"2005005 5291"|"20050055309"|" 20050055595"|"200500 60266"|"20050060525"| "20050075115"|"20050 079863"|"20050091505 "|"20050096024"|"2005 0097516"|"2005010709 1"|"20050108075"|"200 50111463"|"200501289 67"|"20050135264"|"20 050163320"|"20050166 043"|"20050183143"|"2 0050186948"|"2005019 8377"|"20050216421"|" 20050228985"|"200502 38046"|"20050239447"| "20050245241"|"20050 246282"|"20050250508 "|"20050250536"|"2005 0254435"|"2005026682 5"|"20050266880"|"200 60014519"|"200600196 32"|"20060020787"|"20 060026679"|"20060030 306"|"20060034256"|"2 0060035631"|"2006004 0642"|"20060045245"|" 20060048223"|"200600 68796"|"20060072451"| "20060072550"|"20060 072646"|"20060075506 "|"20060085543"|"2006 0095517"|"2006009862 7"|"20060099970"|"200 60101507"|"200601120 16"|"20060114821"|"20 060114832"|"20060126 562"|"20060135144"|"2 0060136882"|"2006014					

		3066"|"20060143098"|" 20060156398"|"200601 60536"|"20060165060"| "20060168128"|"20060 173959"|"20060174035 "|"20060178917"|"2006 0178918"|"2006018213 7"|"20060183462"|"200 60190314"|"200601909 87"|"20060193280"|"20 060199608"|"20060200 663"|"20060206709"|"2 0060206904"|"2006021 8395"|"20060233108"|" 20060233166"|"200602 36095"|"20060242685"| "20060258341"|"20060 277590"|"20060291419 "|"20060291477"|"2007 0005795"|"2007001967 0"|"20070022289"|"200 70025301"|"200700331 94"|"20070033197"|"20 070036312"|"20070055 694"|"20070060200"|"2 0070061243"|"2007006 1800"|"20070061878"|" 20070073899"|"200700 76616"|"20070093243"| "20070100981"|"20070 101426"|"20070104126 "|"20070109983"|"2007 0111740"|"2007013028 3"|"20070130315"|"200 70140113"|"200701401 45"|"20070140275").PN .					
L13	200	("20070143824"|"20070 147317"|"20070147324 "|"20070155365"|"2007 0165630"|"2007016849 9"|"20070171856"|"200 70174490"|"200701910 06"|"20070192460"|"20 070198656"|"20070201 502"|"20070213054"|"2 0070220251"|"2007022 6225"|"20070226775"|" 20070234402"|"200702 43862"|"20070248100"| "20070254646"|"20070 254675"|"20070255769 "|"20070255797"|"2007 0255848"|"2007025776 7"|"20070259656"|"200 70259673"|"200702635 58"|"20070266422"|"20 070274327"|"20070280	(US-PGPUB; USPAT)	AND	OFF	OFF	2020/01/06 04:54 AM

		453"|"20070282896"|"2 0070293191"|"2007029 4395"|"20070294410"|" 20070297378"|"200702 98764"|"20070299965"| "20070300252"|"20080 005285"|"20080005561 "|"20080010379"|"2008 0010452"|"2008001849 4"|"20080022354"|"200 80025230"|"200800327 15"|"20080034063"|"20 080034419"|"20080039 102"|"20080049630"|"2 0080050715"|"2008005 1076"|"20080052387"|" 20080056273"|"200800 59474"|"20080059743"| "20080060066"|"20080 062900"|"20080064367 "|"20080066149"|"2008 0066150"|"2008006618 1"|"20080070550"|"200 80077705"|"200800804 57"|"20080081606"|"20 080082643"|"20080083 013"|"20080085707"|"2 0080089295"|"2008008 9303"|"20080095339"|" 20080096559"|"200800 98062"|"20080109679"| "20080120129"|"20080 120668"|"20080120688 "|"20080125079"|"2008 0126287"|"2008012730 4"|"20080130534"|"200 80130656"|"200801322 01"|"20080132268"|"20 080134330"|"20080139 210"|"20080147454"|"2 0080160958"|"2008016 2637"|"20080162704"|" 20080164304"|"200801 66993"|"20080167027"| "20080167033"|"20080 168275"|"20080168523 "|"20080177998"|"2008 0178300"|"2008018381 2"|"20080184127"|"200 80189760"|"200802012 66"|"20080207167"|"20 080212470"|"20080212 751"|"20080219268"|"2 0080221951"|"2008022 2692"|"20080225748"|" 20080229385"|"200802 29388"|"20080235511"| "20080240373"|"20080					

		250053"|"20080256593 "|"20080259924"|"2008 0262798"|"2008026334 8"|"20080268813"|"200 80270212"|"200802792 16"|"20080282319"|"20 080293395"|"20080298 230"|"20080305793"|"2 0080311885"|"2008031 3315"|"20080313730"|" 20080316923"|"200803 18547"|"20080318550"| "20080319879"|"20080 320497"|"20090005000 "|"20090005005"|"2009 0006116"|"2009000620 0"|"20090006229"|"200 90013157"|"200900163 10"|"20090036111"|"20 090042536"|"20090044 185"|"20090046707"|"2 0090046723"|"2009004 7989"|"20090048913"|" 20090049156"|"200900 49518"|"20090054030"| "20090065571"|"20090 067372"|"20090068984 "|"20090070379"|"2009 0077622"|"2009007969 9"|"20090113514"|"200 90125619"|"200901328 60"|"20090149154"|"20 090157792"|"20090163 173"|"20090172077"|"2 0090180391"|"2009018 1662"|"20090197585"|" 20090197612"|"200902 03352"|"20090217364"| "20090219170"|"20090 248883"|"20090254857 "|"20090257379"|"2009 0271514"|"2009028212 7"|"20090286507"|"200 90287921"|"200902881 40"|"20090291665"|"20 090299857"|"20090307 696"|"20090307746"|"2 0090315735"|"2009032 0110"|"20100017506"|" 20100020822"|"201000 27469"|"20100027559"| "20100030890"|"20100 041364"|"20100041365 "|"20100042675"|"2010 0043068"|"2010006907 4"|"20100071053"|"201 00075666"|"201000802 02"|"20100082431").PN				

L14	256	. ("20100103820"|"20100113020"|"20100121744"|"20100131584"|"20100142478"|"20100144310"|"20100151866"|"20100153781"|"20100167696"|"20100188975"|"20100188990"|"20100188992"|"20100188994"|"20100190469"|"20100191576"|"20100191612"|"20100191846"|"20100192170"|"20100192212"|"20100195503"|"20100197268"|"20100198698"|"20100198939"|"20100235329"|"20100241544"|"20100248719"|"20100284327"|"20100284388"|"20100287599"|"20100311402"|"20100325420"|"20110004917"|"20110013569"|"20110019574"|"20110081881"|"20110082790"|"20110110309"|"20110126141"|"20110145920"|"20110159818"|"20110173678"|"20110177811"|"20110264923"|"20110277019"|"20120020296"|"20120144025"|"20120166364"|"20120196644"|"20120238287"|"20130029653"|"20130058274"|"20130065555"|"20130072177"|"20130084835"|"20130144789"|"20130326356"|"20140073291"|"20140241342"|"20150181628"|"5131020"|"5283904"|"5325532"|"5572528"|"5577100"|"5594777"|"5617539"|"5630159"|"5633484"|"5633868"|"5754953"|"5774532"|"5794142"|"5814798"|"5889477"|"5892900"|"5903845"|"5915008"|"5915226"|"5933778"|"5940472"|"5974439"|"5983270"|"6035281"|"6038452"|"6038540"|"6047268"|"6058434"|"6061571"|"6064878"|"6078953"|"6081591"|"6098878"|"6104700"|"6115823"|"61	(US-PGPUB; USPAT)	AND	OFF	OFF	2020/01/06 04:54 AM

		19933"|"6125391"|"614 1565"|"6141686"|"6148 336"|"6154738"|"61576 36"|"6185576"|"619891 5"|"6219786"|"6226277" |"6246870"|"6263055"|" 6292828"|"6317584"|"6 370139"|"6381316"|"63 93014"|"6397259"|"640 1113"|"6418147"|"6438 575"|"6445777"|"64494 79"|"6466984"|"647767 0"|"6502131"|"6505114" |"6510152"|"6522629"|" 6532235"|"6532579"|"6 535855"|"6535949"|"65 39082"|"6542500"|"654 2992"|"6546016"|"6563 806"|"6570974"|"65743 21"|"6574465"|"657807 6"|"6581092"|"6591098" |"6598034"|"6601040"|" 6603969"|"6603975"|"6 606744"|"6628934"|"66 31122"|"6636721"|"663 9975"|"6640097"|"6640 334"|"6650887"|"66511 01"|"6654786"|"665481 4"|"6658254"|"6662014" |"6678516"|"6683853"|" 6684244"|"6690918"|"6 697821"|"6725031"|"67 25256"|"6732176"|"673 5206"|"6748195"|"6748 437"|"6751296"|"67544 70"|"6757717"|"676041 7"|"6763000"|"6763226" |"6765864"|"6765925"|" 6782412"|"6785889"|"6 792461"|"6829596"|"68 29696"|"6839340"|"684 2628"|"6873988"|"6876 653"|"6879825"|"68827 18"|"6885997"|"690144 0"|"6920455"|"6922562" |"6928280"|"6934249"|" 6934751"|"6947723"|"6 947985"|"6952428"|"69 57067"|"6959202"|"695 9393"|"6965667"|"6965 872"|"6967958"|"69706 92"|"6970927"|"698273 3"|"6983370"|"6996062" |"6996076"|"6996393"|" 6998985"|"7002920"|"7 007295"|"7013469"|"70 17189"|"7024200"|"702 4460"|"7027055"|"7027					

		408"|"7031733"|"70320 72"|"7039027"|"703903 7"|"7039403"|"7039713" |"7042988"|"7043225"|" 7043226"|"7043268"|"7 047276"|"7058022"|"70 58968"|"7068600"|"706 9248"|"7082422"|"7084 775"|"7092696"|"70957 54"|"7102620"|"711075 3"|"7113780"|"7113997" |"7120133"|"7133386"|" 7133695"|"7136361"|"7 139569"|"7142876"|"71 49229"|"7149521"|"715 1764"|"7158792"|"7162 237"|"7165040"|"71670 78"|"7174156"|"717417 4").PN.					
L15	280	("7177919"|"7180855"|" 7181017"|"7191248"|"7 197321"|"7200112"|"72 00551"|"7203169"|"720 3721"|"7203752"|"7212 491"|"7219123"|"72221 90"|"7222304"|"722496 8"|"7228354"|"7236780" |"7242668"|"7242920"|" 7245901"|"7248570"|"7 251218"|"7260382"|"72 66371"|"7269157"|"727 1765"|"7272660"|"7280 816"|"7280818"|"72835 61"|"7283963"|"728683 4"|"7286848"|"7289489" |"7290283"|"7310424"|" 7313237"|"7315892"|"7 317699"|"7318111"|"73 20029"|"7322044"|"732 4447"|"7325037"|"7336 960"|"7340772"|"73464 10"|"7349695"|"735353 3"|"7356011"|"7356337" |"7366497"|"7366654"|" 7369848"|"7369856"|"7 373136"|"7373179"|"73 79731"|"7388950"|"738 9412"|"7391724"|"7395 244"|"7401338"|"74037 63"|"7409447"|"740956 9"|"7411930"|"7418253" |"7418257"|"7421004"|" 7423971"|"7428750"|"7 433362"|"7436816"|"74 40433"|"7444669"|"745 0591"|"7450927"|"7454 191"|"7457265"|"74578 70"|"7460837"|"746665	(US-PGPUB; USPAT)	AND	OFF	OFF	2020/01/06 04:54 AM

		2"|"7467160"|"7472189" |"7478420"|"7486185"|" 7486658"|"7493659"|"7 496652"|"7499438"|"74 99537"|"7502672"|"750 5756"|"7505795"|"7508 799"|"7512128"|"75121 31"|"7515608"|"751592 6"|"7516219"|"7522549" |"7522576"|"7526541"|" 7529204"|"7535880"|"7 536695"|"7539132"|"75 39862"|"7540408"|"754 5782"|"7546460"|"7546 629"|"7548875"|"75489 76"|"7551921"|"755192 2"|"7554983"|"7555757" |"7561899"|"7562213"|" 7564799"|"7565141"|"7 574509"|"7574731"|"75 77431"|"7580356"|"758 0857"|"7583964"|"7584 298"|"7586871"|"75934 17"|"7593730"|"759637 3"|"7599288"|"7599714" |"7602746"|"7606918"|" 7607041"|"7609650"|"7 609700"|"7610047"|"76 10057"|"7610328"|"761 0396"|"7614051"|"7616 962"|"7617516"|"76200 41"|"7620065"|"762016 2"|"7620383"|"7627314" |"7627600"|"7627767"|" 7627872"|"7633438"|"7 634388"|"7636574"|"76 36626"|"7643411"|"764 4151"|"7644267"|"7644 414"|"7647047"|"76501 37"|"7653394"|"765627 1"|"7657920"|"7660419" |"7661124"|"7664494"|" 7668176"|"7668612"|"7 668903"|"7668966"|"76 76673"|"7680086"|"768 1226"|"7684370"|"7685 131"|"7685254"|"76855 30"|"7688792"|"769310 7"|"7693720"|"7697540" |"7710932"|"7711848"|" 7719966"|"7720206"|"7 720464"|"7720505"|"77 20960"|"7721296"|"772 4716"|"7725570"|"7729 326"|"7730123"|"77347 84"|"7742406"|"774685 4"|"7747240"|"7747699" |"7747730"|"7752330"|"				

		7756056"|"7756534"|"7 756757"|"7760137"|"77 60711"|"7760861"|"776 5294"|"7769397"|"7770 785"|"7774323"|"77744 12"|"7774456"|"777817 6"|"7778643"|"7792257" |"7792538"|"7792708"|" 7797019"|"7797060"|"7 797204"|"7797401"|"78 01523"|"7801783"|"780 1985"|"7802724"|"7805 140"|"7805522"|"78056 06"|"7809351"|"780937 2"|"7813746"|"7817615" |"7817983"|"7822837"|" 7822849"|"7826427"|"7 826607"|"7835275"|"78 43831"|"7843843"|"784 4034"|"7844728"|"7848 768"|"7849161"|"78491 70"|"7849477"|"785325 5"|"7853656"|"7856226" |"7860088"|"7865182"|" 7865187"|"7868778"|"7 873001"|"7873344"|"78 73346"|"7873540"|"787 3705"|"7877090"|"7881 199"|"7881697"|"78820 29"|"7882247"|"788256 0"|"7886047"|"7889384" |"7890084"|"7890111"|" 7894431"|"7899039"|"7 899438"|"7903553"|"79 07970"|"7908358").PN.					
L16	280	("7911975"|"7912025"|" 7912056"|"7920529"|"7 921463"|"7925740"|"79 25778"|"7929959"|"792 9960"|"7929973"|"7930 327"|"7930446"|"79305 53"|"7933274"|"793673 6"|"7937069"|"7937450" |"7940685"|"7940751"|" 7941184"|"7944948"|"7 945238"|"7945240"|"79 45945"|"7948952"|"794 8953"|"7948968"|"7949 529"|"7953808"|"79538 77"|"7957020"|"795738 1"|"7957511"|"7958029" |"7962622"|"7965983"|" 7966405"|"7969950"|"7 970350"|"7970426"|"79 74624"|"7975184"|"797 8627"|"7978686"|"7979 069"|"7979889"|"79798 96"|"7984130"|"798451	(US-PGPUB; USPAT)	AND	OFF	OFF	2020/01/06 04:54 AM

		1"|"7986935"|"7987496" |"7987510"|"7990049"|" 8000276"|"8000318"|"8 005009"|"8005459"|"80 05726"|"8005913"|"800 5988"|"8010080"|"8010 081"|"8010082"|"80109 90"|"8015133"|"801523 4"|"8019687"|"8019820" |"8019846"|"8019868"|" 8019886"|"8023425"|"8 024397"|"8024424"|"80 27339"|"8031601"|"803 2168"|"8032409"|"8032 899"|"8036387"|"80366 00"|"8044792"|"804597 3"|"8046449"|"8050275" |"8050690"|"8050705"|" 8059530"|"8060017"|"8 060463"|"8064418"|"80 64896"|"8065365"|"806 8824"|"8068829"|"8073 427"|"8073721"|"80781 40"|"8078163"|"808580 8"|"8086398"|"8086497" |"8086791"|"8090359"|" 8090361"|"8090616"|"8 091087"|"8094551"|"80 95112"|"8095124"|"809 5640"|"8095666"|"8098 579"|"8099077"|"80995 17"|"8102814"|"810328 5"|"8104080"|"8107953" |"8108520"|"8108680"|" 8112435"|"8116223"|"8 116749"|"8116781"|"81 22128"|"8122249"|"812 5897"|"8126123"|"8126 396"|"8126476"|"81267 22"|"8130793"|"813125 6"|"8131281"|"8131840" |"8131858"|"8132256"|" 8134954"|"8135388"|"8 135392"|"8135657"|"81 40690"|"8144591"|"814 5194"|"8146142"|"8149 748"|"8149823"|"81503 94"|"8150431"|"815120 5"|"8155155"|"8155620" |"8155666"|"8155670"|" 8156206"|"8159520"|"8 160015"|"8160056"|"81 60598"|"8165576"|"816 6040"|"8166554"|"8170 553"|"8174378"|"81749 70"|"8175574"|"818033 3"|"8180881"|"8180886" |"8184530"|"8184590"|"				

		8185088"|"8185093"|"8 185127"|"8185152"|"81 85158"|"8190087"|"819 0122"|"8190675"|"8191 106"|"8191116"|"81911 24"|"8194549"|"819455 3"|"8194572"|"8194581" |"8195093"|"8195153"|" 8195163"|"8195661"|"8 196199"|"8200163"|"82 00200"|"8200509"|"820 0775"|"8200818"|"8204 190"|"8204505"|"82087 88"|"8208919"|"821329 6"|"8213363"|"8214536" |"8214890"|"8219134"|" 8223655"|"8223741"|"8 224382"|"8224773"|"82 28818"|"8229394"|"822 9914"|"8233433"|"8233 883"|"8233895"|"82345 83"|"8238287"|"823891 3"|"8239520"|"8242959" |"8244241"|"8249601"|" 8254880"|"8254915"|"8 255515"|"8255534"|"82 55689"|"8259692"|"826 4965"|"8265004"|"8266 249"|"8266681"|"82709 55"|"8270972"|"827102 5"|"8271045"|"8271049" |"8271992"|"8275415"|" 8275830"|"8279067"|"8 279864"|"8280354"|"82 84740"|"8285249"|"828 5992"|"8290820"|"8291 238"|"8291439"|"82964 04"|"8300575"|"830651 8"|"8306741"|"8307067" |"8310943"|"8315198"|" 8315593"|"8315594"|"8 315718"|"8315999"|"83 20244"|"8320949"|"832 5638"|"8325906"|"8326 319"|"8326828"|"83312 23"|"8331293"|"833237 5"|"8339991"|"8340625" |"8340628"|"8340678"|" 8340718"|"8346210"|"8 346923"|"8347104"|"83 47362"|"8347378").PN.					
L17	231	("8350700"|"8351592"|" 8351898"|"8352360"|"8 352980"|"8353001"|"83 55570"|"8355696"|"835 6336"|"8358638"|"8358 975"|"8363658"|"83637 99"|"8364089"|"836480	(US-PGPUB; USPAT)	AND	OFF	OFF	2020/01/06 04:54 AM

		6"|"8369274"|"8370477" |"8370483"|"8374090"|" 8374592"|"8375128"|"8 375136"|"8380247"|"83 85199"|"8385896"|"838 5964"|"8385975"|"8386 386"|"8391262"|"83929 82"|"8396458"|"839692 9"|"8401968"|"8402165" |"8402540"|"8406427"|" 8406736"|"8407763"|"8 411587"|"8411691"|"84 12798"|"8413245"|"841 8168"|"8422988"|"8423 016"|"8429403"|"84377 34"|"8442015"|"844683 1"|"8447324"|"8447607" |"8447980"|"8448015"|" 8452858"|"8461958"|"8 463194"|"8463232"|"84 68337"|"8472371"|"847 7778"|"8483135"|"8483 694"|"8484327"|"84885 97"|"8489110"|"848972 0"|"8494559"|"8495181" |"8495227"|"8495360"|" 8495700"|"8495743"|"8 499087"|"8500533"|"85 03358"|"8503455"|"850 4032"|"8504574"|"8504 687"|"8504690"|"85047 29"|"8505073"|"850908 2"|"8514927"|"8516552" |"8520589"|"8520595"|" 8521110"|"8521775"|"8 522039"|"8522249"|"85 22337"|"8523547"|"852 6329"|"8526350"|"8527 410"|"8527662"|"85280 68"|"8531954"|"853199 5"|"8532610"|"8533775" |"8535160"|"8538394"|" 8538421"|"8538458"|"8 539544"|"8543265"|"85 43814"|"8544105"|"854 8427"|"8549173"|"8554 876"|"8559369"|"85611 38"|"8565746"|"856623 6"|"8571474"|"8571501" |"8571598"|"8571993"|" 8572117"|"8572256"|"8 583499"|"8588240"|"85 89955"|"8594665"|"859 5186"|"8600895"|"8601 125"|"8605691"|"86155 07"|"8619735"|"862025 7"|"8631428"|"8634425" |"8635164"|"8639215"|"				

		8644702"|"8644813"|"8645518"|"8655357"|"8656472"|"8660853"|"8666395"|"8667542"|"8670334"|"8675852"|"8676682"|"8676925"|"8693323"|"8694772"|"8700729"|"8701015"|"8705361"|"8706863"|"8713535"|"8713641"|"8719397"|"8719423"|"8724486"|"8725899"|"8730842"|"8731519"|"8732808"|"8739035"|"8744339"|"8761711"|"8780857"|"8787249"|"8793304"|"8804695"|"8811338"|"8811991"|"8818394"|"8819253"|"8825109"|"8826411"|"8831561"|"8838752"|"8843849"|"8845415"|"8849297"|"8855620"|"8862751"|"8863111"|"8875042"|"8880047"|"8891483"|"8898748"|"8908516"|"8929374"|"8930238"|"8943551"|"8948726"|"8949382"|"8949597"|"8955038"|"8966018"|"8971912"|"8977284"|"8995952"|"9002342"|"9014973"|"9015331"|"9030934"|"9049010"|"9064275"|"9105031"|"9111088"|"9137286"|"9172553"|"9177455"|"9282460"|"9286469"|"9286604"|"9313708"|"9325737"|"9326173"|"9344557"|"9363285"|"9367680"|"9413546"|"9418381"|"9459767"|"9501803"|"9544397"|"9589117"|"9609459"|"9986413"|"RE44412").PN.					
L18	478	(Raleigh Gregory G).in.	(US-PGPUB; USPAT)	AND	OFF	OFF	2020/01/06 04:57 AM
L19	395690	(G06Q40/12 H04M15/00 H04L12/14 H04L41/5054 H04L47/20 H04M15/88 H04W12/0017 G06Q10/06315 G06Q30/0601 H04L67/145 H04W8/18 H04W72/0453 H04L9/3247 H04L63/08 H04W8/20 H04M15/58	(US-PGPUB; USPAT)	OR	OFF	OFF	2020/01/06 05:48 AM

		H04M15/61 H04W88/08 H04L9/32 H04L41/0893 H04L67/306 G06Q10/06375 H04L67/327 H04W4/50 H04W12/02 H04W24/08 H04W28/02 H04W4/02 H04W4/18 H04W28/0215 H04L67/26 H04W12/08 H04W48/14 G06Q40/00 H04L41/5003 H04L63/0892 H04W4/12 G06Q30/0283 H04M15/80 G06Q20/102 G06Q30/0241 H04L63/0853 H04W4/20 H04W28/12 H04W48/16 H04W12/00 G06F15/177 G06Q30/04 H04L63/0428 H04L47/2408 H04L63/0236 H04W12/06 H04W28/0268 G06Q20/20 H04L41/0806 H04L51/046 H04L63/04 H04W4/24 G06Q30/0207 G06Q30/0284 H04L63/10 H04L63/20 G06Q20/40 H04W84/04 H04L67/2819 H04W88/06 Y02P90/86 H04L41/0876 H04L67/34 H04W84/042 H04W8/02 H04L41/5025 H04M2215/0188 H04W84/12).cpc.					
L20	127192	L19 @ad<"20090213"	(US-PGPUB; USPAT)	AND	OFF	OFF	2020/01/06 05:48 AM
L21	8602	secure environment service profile modem control link @ad<"20090213"	(US-PGPUB; USPAT)	AND	OFF	OFF	2020/01/06 06:17 AM
L22	91	secure environment service profile modem adj control link @ad<"20090213"	(US-PGPUB; USPAT)	AND	OFF	OFF	2020/01/06 06:17 AM

L26	1	16/907,887.app.	(US-PGPUB; USPAT)	AND	OFF	OFF	2021/06/19 07:19 PM
L27	1399069	(G06F15/177 G06Q10/06315 G06Q10/06375 G06Q20/102 G06Q20/20 G06Q20/32 G06Q20/40 G06Q30/0207 G06Q30/0241 G06Q30/0283 G06Q30/0284 G06Q30/04 G06Q30/0601 G06Q40/00 G06Q40/12 H04L12/14 H04L12/1407 H04L41/0806 H04L41/0876 H04L41/0893 H04L41/5003 H04L41/5025 H04L41/5054 H04L47/20 H04L47/2408 H04L51/046 H04L63/0236 H04L63/04 H04L63/0428 H04L63/08 H04L63/0853 H04L63/0892 H04L63/10 H04L63/20 H04L67/145 H04L67/26 H04L67/2819 H04L67/306 H04L67/327 H04L67/34 H04L9/32 H04L9/3247 H04M15/00 H04M15/49 H04M15/58 H04M15/61 H04M15/66 H04M15/80 H04M15/8055 H04M15/88 H04M2215/0188 H04W12/00 H04W12/02 H04W12/037 H04W12/06 H04W12/08 H04W24/08 H04W28/02 H04W28/0215 H04W28/0268 H04W28/12 H04W4/02 H04W4/12 H04W4/18 H04W4/20 H04W4/24 H04W4/50 H04W48/14 H04W48/16	(US-PGPUB; USPAT; USOCR; FPRS; EPO; JPO; DERWENT; IBM_TDB)	OR	OFF	OFF	2021/06/19 08:06 PM

		H04W72/0453 H04W8/02 H04W8/18 H04W8/20 H04W84/04 H04W84/042 H04W84/12 H04W88/06 H04W88/08 Y02P90/80).cpc.					
L28	11927	(726/1).CCLS.	(US-PGPUB; USPAT; USOCR; FPRS; EPO; JPO; DERWENT; IBM_TDB)	AND	ON	ON	2021/06/19 08:06 PM
L29	1404578	L27 L28	(US-PGPUB; USPAT; USOCR; FPRS; EPO; JPO; DERWENT; IBM_TDB)	OR	OFF	OFF	2021/06/19 08:07 PM
L30	8608	secure environment service profile modem control link @ad<"20090213"	(US-PGPUB; USPAT; USOCR; FPRS; EPO; JPO; DERWENT; IBM_TDB)	AND	OFF	OFF	2021/06/19 08:09 PM
L31	3387	L29 L30	(US-PGPUB; USPAT; USOCR; FPRS; EPO; JPO; DERWENT; IBM_TDB)	AND	OFF	OFF	2021/06/19 08:09 PM
L32	2265	secure service measurement environment profile modem control link @ad<"20090213"	(US-PGPUB; USPAT; USOCR; FPRS; EPO; JPO; DERWENT; IBM_TDB)	AND	OFF	OFF	2021/06/19 08:10 PM
L33	2	16/034,362.app.	(US-PGPUB; USPAT)	AND	OFF	OFF	2021/06/19 08:13 PM
L34	88	(Headwater Research).as.	(US-PGPUB; USPAT; USOCR; FPRS; EPO; JPO; DERWENT; IBM_TDB)	AND	OFF	OFF	2021/06/19 08:18 PM
L35	1035	(Raleigh Gregory G).in.	(US-PGPUB; USPAT; USOCR; FPRS; EPO; JPO; DERWENT; IBM_TDB)	AND	OFF	OFF	2021/06/19 08:18 PM
L36	201	("10285025"|"10326800"|"10492102"|"10582375"|"20010048738"|"20010053694"|"20020013844"|"20020022472"|"20020022483"|"20020049074"|"20020099848"|"20020116338"|"20020120370"|"20020120540"|"20020131404"|"20020138599"|"20020138601"|"20020154751"|"20020161601"|"20020164983"|"20020176377"|"20020188732"|"20020191573"|"20020199001"|"200	(US-PGPUB; USPAT)	AND	ON	ON	2021/06/19 08:20 PM

		30004937"|"200300051 12"|"20030013434"|"20 030018524"|"20030028 623"|"20030046396"|"2 0030050070"|"2003005 0837"|"20030084321"|" 20030088671"|"200301 33408"|"20030134650"| "20030159030"|"20030 161265"|"20030171112 "|"20030182420"|"2003 0182435"|"2003018479 3"|"20030188006"|"200 30188117"|"200302209 84"|"20030224781"|"20 030229900"|"20030233 332"|"20030236745"|"2 0040019539"|"2004001 9564"|"20040021697"|" 20040024756"|"200400 30705"|"20040039792"| "20040044623"|"20040 047358"|"20040054779 "|"20040073672"|"2004 0082346"|"2004009871 5"|"20040102182"|"200 40103193"|"200401073 60"|"20040116140"|"20 040127200"|"20040127 208"|"20040127256"|"2 0040132427"|"2004013 3668"|"20040137890"|" 20040165596"|"200401 67958"|"20040168052"| "20040170191"|"20040 176104"|"20040198331 "|"20040203755"|"2004 0203833"|"2004022556 1"|"20040225898"|"200 40236547"|"200402436 80"|"20040243992"|"20 040249918"|"20040255 145"|"20040259534"|"2 0040260766"|"2004026 7872"|"20050007993"|" 20050009499"|"200500 21995"|"20050041617"| "20050048950"|"20050 055291"|"20050055309 "|"20050055595"|"2005 0060266"|"2005006052 5"|"20050075115"|"200 50079863"|"200500915 05"|"20050096024"|"20 050097516"|"20050107 091"|"20050108075"|"2 0050111463"|"2005012 8967"|"20050135264"|"				

		20050163320"|"200501 66043"|"20050183143"| "20050186948"|"20050 198377"|"20050216421 "|"20050228985"|"2005 0238046"|"2005023944 7"|"20050245241"|"200 50246282"|"200502505 08"|"20050250536"|"20 050254435"|"20050266 825"|"20050266880"|"2 0060014519"|"2006001 9632"|"20060020787"|" 20060026679"|"200600 30306"|"20060034256"| "20060035631"|"20060 040642"|"20060045245 "|"20060048223"|"2006 0068796"|"2006007245 1"|"20060072550"|"200 60072646"|"200600755 06"|"20060085543"|"20 060095517"|"20060098 627"|"20060099970"|"2 0060101507"|"2006011 2016"|"20060114821"|" 20060114832"|"200601 26562"|"20060135144"| "20060136882"|"20060 143066"|"20060143098 "|"20060156398"|"2006 0160536"|"2006016506 0"|"20060168128"|"200 60173959"|"200601740 35"|"20060178917"|"20 060178918"|"20060182 137"|"20060183462"|"2 0060190314"|"2006019 0987"|"20060193280"|" 20060199608"|"200602 00663"|"20060206709"| "20060206904"|"20060 218395"|"20060233108 "|"20060233166"|"2006 0236095"|"2006024268 5"|"20060258341"|"200 60274706"|"200602775 90"|"20060291419"|"20 060291477"|"20070005 795"|"20070019670"|"2 0070022289"|"2007002 5301"|"20070033194"|" 20070033197"|"200700 35390"|"20070036312"| "20070055694"|"20070 060200"|"20070061243 "|"20070061800"|"2007 0061878"|"2007007389					

		9"|"20070076616"|"20070093243"|"20070100981"|"20070101426"|"20070104126"|"20070104169"|"20070109983").PN.					
L37	200	("20070111740"|"20070130283"|"20070130315"|"20070140113"|"20070140145"|"20070140275"|"20070143824"|"20070147317"|"20070147324"|"20070155365"|"20070165630"|"20070168499"|"20070171856"|"20070174490"|"20070191006"|"20070192460"|"20070198656"|"20070201502"|"20070213054"|"20070220251"|"20070226225"|"20070226775"|"20070234402"|"20070243862"|"20070248100"|"20070254646"|"20070254675"|"20070255769"|"20070255797"|"20070255848"|"20070257767"|"20070259656"|"20070259673"|"20070263558"|"20070266422"|"20070274327"|"20070280453"|"20070282896"|"20070293191"|"20070294395"|"20070294410"|"20070297378"|"20070298764"|"20070299965"|"20070300252"|"20080005285"|"20080005561"|"20080010379"|"20080010452"|"20080018494"|"20080022354"|"20080025230"|"20080032715"|"20080034063"|"20080034419"|"20080039102"|"20080049630"|"20080050715"|"20080051076"|"20080052387"|"20080056273"|"20080059474"|"20080059743"|"20080060066"|"20080062900"|"20080064367"|"20080066149"|"20080066150"|"20080066181"|"20080070550"|"20080077705"|"20080080457"|"20080081606"|"20080082643"|"20080083013"|"20080085707"|	(US-PGPUB; USPAT)	AND	ON	ON	2021/06/19 08:20 PM

		"20080089295"|"20080 089303"|"20080095339 "|"20080096559"|"2008 0098062"|"2008010967 9"|"20080120129"|"200 80120668"|"200801206 88"|"20080125079"|"20 080126287"|"20080127 304"|"20080130534"|"2 0080130656"|"2008013 2201"|"20080132268"|" 20080134330"|"200801 39210"|"20080147454"| "20080160958"|"20080 162637"|"20080162704 "|"20080164304"|"2008 0166993"|"2008016702 7"|"20080167033"|"200 80168275"|"200801685 23"|"20080177998"|"20 080178300"|"20080181 117"|"20080183812"|"2 0080184127"|"2008018 9760"|"20080201266"|" 20080207167"|"200802 12470"|"20080212751"| "20080219268"|"20080 221951"|"20080222692 "|"20080225748"|"2008 0229385"|"2008022938 8"|"20080235511"|"200 80240373"|"200802500 53"|"20080256593"|"20 080259924"|"20080262 798"|"20080263348"|"2 0080268813"|"2008027 0212"|"20080279216"|" 20080282319"|"200802 91872"|"20080293395"| "20080298230"|"20080 305793"|"20080311885 "|"20080313315"|"2008 0313730"|"2008031692 3"|"20080318547"|"200 80318550"|"200803198 79"|"20080320497"|"20 090005000"|"20090005 005"|"20090006116"|"2 0090006200"|"2009000 6229"|"20090013157"|" 20090016310"|"200900 17809"|"20090036111"| "20090042536"|"20090 044185"|"20090046707 "|"20090046723"|"2009 0047989"|"2009004891 3"|"20090049156"|"200 90049518"|"200900540					

		30"|"20090065571"|"20 090067372"|"20090068 984"|"20090070379"|"2 0090077622"|"2009007 9699"|"20090113514"|" 20090125619"|"200901 32860"|"20090149154"| "20090157792"|"20090 163173"|"20090172077 "|"20090180391"|"2009 0181662"|"2009019758 5"|"20090197612"|"200 90203352"|"200902170 65"|"20090217364"|"20 090219170"|"20090248 883"|"20090254857"|"2 0090257379"|"2009026 2715"|"20090271514"|" 20090282127"|"200902 86507"|"20090287921"| "20090288140"|"20090 291665"|"20090299857 "|"20090307696"|"2009 0307746"|"2009031573 5"|"20090320110"|"201 00017506"|"201000208 22"|"20100027469").PN .					
L38	249	("20100027559"|"20100 030890"|"20100041364 "|"20100041365"|"2010 0041391"|"2010004267 5"|"20100043068"|"201 00069074"|"201000710 53"|"20100075666"|"20 100077035"|"20100080 202"|"20100082431"|"2 0100088387"|"2010010 3820"|"20100113020"|" 20100121744"|"201001 31584"|"20100142478"| "20100144310"|"20100 151866"|"20100153781 "|"20100167696"|"2010 0188975"|"2010018899 0"|"20100188992"|"201 00188994"|"201001904 69"|"20100191576"|"20 100191612"|"20100191 846"|"20100192170"|"2 0100192212"|"2010019 5503"|"20100197268"|" 20100198698"|"201001 98939"|"20100235329"| "20100241544"|"20100 248719"|"20100284327 "|"20100284388"|"2010 0287599"|"2010031140	(US-PGPUB; USPAT)	AND	ON	ON	2021/06/19 08:20 PM

		2"|"20100325420"|"201 10004917"|"201100135 69"|"20110019574"|"20 110081881"|"20110082 790"|"20110110309"|"2 0110126141"|"2011014 5920"|"20110159818"|" 20110173678"|"201101 77811"|"20110182220"| "20110185202"|"20110 244837"|"20110249668 "|"20110264923"|"2011 0277019"|"2012002029 6"|"20120144025"|"201 20166364"|"201201966 44"|"20120238287"|"20 130029653"|"20130058 274"|"20130065555"|"2 0130072177"|"2013008 4835"|"20130144789"|" 20130225151"|"201303 26356"|"20140073291"| "20140241342"|"20150 181628"|"5131020"|"52 83904"|"5325532"|"557 2528"|"5577100"|"5594 777"|"5617539"|"56301 59"|"5633484"|"563386 8"|"5754953"|"5774532" |"5794142"|"5814798"|" 5889477"|"5892900"|"5 903845"|"5915008"|"59 15226"|"5933778"|"594 0472"|"5974439"|"5983 270"|"6035281"|"60384 52"|"6038540"|"604726 8"|"6058434"|"6061571" |"6064878"|"6078953"|" 6081591"|"6098878"|"6 104700"|"6115823"|"61 19933"|"6125391"|"614 1565"|"6141686"|"6148 336"|"6154738"|"61576 36"|"6185576"|"619891 5"|"6219786"|"6226277" |"6246870"|"6263055"|" 6292828"|"6317584"|"6 370139"|"6381316"|"63 93014"|"6397259"|"640 1113"|"6418147"|"6438 575"|"6445777"|"64494 79"|"6466984"|"647767 0"|"6502131"|"6505114" |"6510152"|"6522629"|" 6532235"|"6532579"|"6 535855"|"6535949"|"65 39082"|"6542500"|"654 2992"|"6546016"|"6563					

		806"|"6570974"|"65743 21"|"6574465"|"657807 6"|"6581092"|"6591098" |"6598034"|"6601040"|" 6603969"|"6603975"|"6 606744"|"6628934"|"66 31122"|"6636721"|"663 9975"|"6640097"|"6640 334"|"6650887"|"66511 01"|"6654786"|"665481 4"|"6658254"|"6662014" |"6678516"|"6683853"|" 6684244"|"6690918"|"6 694362"|"6697821"|"67 25031"|"6725256"|"673 2176"|"6735206"|"6748 195"|"6748437"|"67512 96"|"6754470"|"675771 7"|"6760417"|"6763000" |"6763226"|"6765864"|" 6765925"|"6782412"|"6 785889"|"6792461"|"68 29596"|"6829696"|"683 9340"|"6842628"|"6873 988"|"6876653"|"68798 25"|"6882718"|"688599 7"|"6901440"|"6920455" |"6922562"|"6928280"|" 6934249"|"6934751"|"6 947723"|"6947985"|"69 52428"|"6957067"|"695 9202"|"6959393"|"6965 667"|"6965872"|"69679 58"|"6970692"|"697092 7"|"6982733"|"6983370" |"6996062"|"6996076"|" 6996393"|"6998985"|"7 002920"|"7007295"|"70 13469"|"7017189"|"702 4200"|"7024460"|"7027 055"|"7027408"|"70317 33"|"7032072"|"703902 7"|"7039037"|"7039403" |"7039713"|"7042988"|" 7043225"|"7043226"|"7 043268"|"7047276").PN .				
L39	280	("7058022"|"7058968"|" 7068600"|"7069248"|"7 082422"|"7084775"|"70 92696"|"7095754"|"710 2620"|"7110753"|"7113 780"|"7113997"|"71201 33"|"7133386"|"713369 5"|"7136361"|"7139569" |"7142876"|"7149229"|" 7149521"|"7151764"|"7 158792"|"7162237"|"71	(US-PGPUB; USPAT)	AND	ON	ON	2021/06/19 08:20 PM

		65040"|"7167078"|"717 4156"|"7174174"|"7177 919"|"7180855"|"71810 17"|"7191248"|"719732 1"|"7200112"|"7200551" |"7203169"|"7203721"|" 7203752"|"7212491"|"7 219123"|"7222190"|"72 22304"|"7224968"|"722 8354"|"7236780"|"7242 668"|"7242920"|"72459 01"|"7248570"|"725121 8"|"7260382"|"7266371" |"7269157"|"7271765"|" 7272660"|"7280816"|"7 280818"|"7283561"|"72 83963"|"7286834"|"728 6848"|"7289489"|"7290 283"|"7310424"|"73132 37"|"7315892"|"731769 9"|"7318111"|"7320029" |"7322044"|"7324447"|" 7325037"|"7336960"|"7 340772"|"7346410"|"73 49695"|"7353533"|"735 6011"|"7356337"|"7366 497"|"7366654"|"73669 34"|"7369848"|"736985 6"|"7373136"|"7373179" |"7379731"|"7388950"|" 7389412"|"7391724"|"7 395056"|"7395244"|"74 01338"|"7403763"|"740 9447"|"7409569"|"7411 930"|"7418253"|"74182 57"|"7421004"|"742397 1"|"7428750"|"7433362" |"7436816"|"7440433"|" 7444669"|"7450591"|"7 450927"|"7454191"|"74 57265"|"7457870"|"746 0837"|"7466652"|"7467 160"|"7472189"|"74784 20"|"7486185"|"748665 8"|"7493659"|"7496652" |"7499438"|"7499537"|" 7502672"|"7505756"|"7 505795"|"7508799"|"75 12128"|"7512131"|"751 5608"|"7515926"|"7516 219"|"7522549"|"75225 76"|"7526541"|"752920 4"|"7535880"|"7536695" |"7539132"|"7539862"|" 7540408"|"7545782"|"7 546460"|"7546629"|"75 48875"|"7548976"|"755 1921"|"7551922"|"7554					

		983"|"7555757"|"75618 99"|"7562213"|"756479 9"|"7565141"|"7574509" |"7574731"|"7577431"|" 7580356"|"7580857"|"7 583964"|"7584298"|"75 85217"|"7586871"|"759 3417"|"7593730"|"7596 373"|"7599288"|"75997 14"|"7602746"|"760691 8"|"7607041"|"7609650" |"7609700"|"7610047"|" 7610057"|"7610328"|"7 610396"|"7614051"|"76 16962"|"7617516"|"762 0041"|"7620065"|"7620 162"|"7620383"|"76273 14"|"7627600"|"762776 7"|"7627872"|"7633438" |"7634388"|"7636574"|" 7636626"|"7643411"|"7 644151"|"7644267"|"76 44414"|"7647047"|"765 0137"|"7653394"|"7656 271"|"7657920"|"76604 19"|"7661124"|"766449 4"|"7668176"|"7668612" |"7668903"|"7668966"|" 7676673"|"7680086"|"7 681226"|"7684370"|"76 85131"|"7685254"|"768 5530"|"7688792"|"7693 107"|"7693720"|"76975 40"|"7710932"|"771184 8"|"7719966"|"7720206" |"7720464"|"7720505"|" 7720960"|"7721296"|"7 724716"|"7725570"|"77 29326"|"7730123"|"773 4784"|"7742406"|"7746 854"|"7747240"|"77476 99"|"7747730"|"775233 0"|"7756056"|"7756534" |"7756757"|"7760137"|" 7760711"|"7760861"|"7 765294"|"7769397"|"77 70785"|"7774323"|"777 4412"|"7774456"|"7778 176"|"7778643"|"77922 57"|"7792538"|"779270 8"|"7797019"|"7797060" |"7797204"|"7797401"|" 7801523"|"7801783"|"7 801985"|"7802724"|"78 05140"|"7805522"|"780 5606"|"7809351"|"7809 372"|"7813746"|"78176 15"|"7817983"|"782283					

		7"|"7822849"|"7826427" |"7826607"|"7835275"|" 7843831"|"7843843"|"7 844034"|"7844728"|"78 48768"|"7849161").PN.					
L40	280	("7849170"|"7849477"|" 7853255"|"7853656"|"7 856226"|"7860088"|"78 65182"|"7865187"|"786 8778"|"7873001"|"7873 344"|"7873346"|"78735 40"|"7873705"|"787709 0"|"7881199"|"7881697" |"7882029"|"7882247"|" 7882560"|"7886047"|"7 889384"|"7890084"|"78 90111"|"7894431"|"789 9039"|"7899438"|"7903 553"|"7907970"|"79083 58"|"7911975"|"791202 5"|"7912056"|"7920529" |"7921463"|"7925740"|" 7925778"|"7929959"|"7 929960"|"7929973"|"79 30327"|"7930446"|"793 0553"|"7933274"|"7936 736"|"7937069"|"79374 50"|"7940685"|"794075 1"|"7941184"|"7944948" |"7945238"|"7945240"|" 7945945"|"7948952"|"7 948953"|"7948968"|"79 49529"|"7953808"|"795 3877"|"7957020"|"7957 381"|"7957511"|"79580 29"|"7962622"|"796598 3"|"7966405"|"7969950" |"7970350"|"7970426"|" 7974624"|"7975184"|"7 978627"|"7978686"|"79 79069"|"7979889"|"797 9896"|"7984130"|"7984 511"|"7986935"|"79874 96"|"7987510"|"799004 9"|"8000276"|"8000318" |"8005009"|"8005459"|" 8005726"|"8005913"|"8 005988"|"8010080"|"80 10081"|"8010082"|"801 0990"|"8015133"|"8015 234"|"8015249"|"80196 87"|"8019820"|"801984 6"|"8019868"|"8019886" |"8023425"|"8024397"|" 8024424"|"8027339"|"8 031601"|"8032168"|"80 32409"|"8032899"|"803 6387"|"8036600"|"8044	(US-PGPUB; USPAT)	AND	ON	ON	2021/06/19 08:20 PM

		792"|"8045973"|"80464 49"|"8050275"|"805069 0"|"8050705"|"8059530" |"8060017"|"8060463"|" 8060603"|"8064418"|"8 064896"|"8065365"|"80 68824"|"8068829"|"807 3427"|"8073721"|"8078 140"|"8078163"|"80858 08"|"8086398"|"808649 7"|"8086791"|"8090359" |"8090361"|"8090616"|" 8091087"|"8094551"|"8 095112"|"8095124"|"80 95640"|"8095666"|"809 8579"|"8099077"|"8099 517"|"8102814"|"81032 85"|"8104080"|"810795 3"|"8108520"|"8108680" |"8112435"|"8116223"|" 8116749"|"8116781"|"8 122128"|"8122249"|"81 25897"|"8126123"|"812 6396"|"8126476"|"8126 722"|"8130793"|"81312 56"|"8131281"|"813184 0"|"8131858"|"8132256" |"8134954"|"8135388"|" 8135392"|"8135657"|"8 140690"|"8144591"|"81 45194"|"8146142"|"814 9748"|"8149823"|"8150 394"|"8150431"|"81512 05"|"8155155"|"815562 0"|"8155666"|"8155670" |"8156206"|"8159520"|" 8160015"|"8160056"|"8 160598"|"8165576"|"81 66040"|"8166554"|"817 0553"|"8174378"|"8174 970"|"8175574"|"81803 33"|"8180881"|"818088 6"|"8184530"|"8184590" |"8185088"|"8185093"|" 8185127"|"8185152"|"8 185158"|"8190087"|"81 90122"|"8190675"|"819 1106"|"8191116"|"8191 124"|"8194549"|"81945 53"|"8194572"|"819458 1"|"8195093"|"8195153" |"8195163"|"8195661"|" 8196199"|"8200163"|"8 200200"|"8200509"|"82 00775"|"8200818"|"820 4190"|"8204505"|"8208 788"|"8208919"|"82132 96"|"8213363"|"821453					

		6"|"8214890"|"8219134"|"8223655"|"8223741"|"8224382"|"8224773"|"8228818"|"8229394"|"8229914"|"8233433"|"8233883"|"8233895"|"8234583"|"8238287"|"8238913"|"8239520"|"8242959"|"8244241"|"8249601"|"8254880"|"8254915"|"8255515"|"8255534"|"8255689"|"8259692"|"8260252"|"8264965"|"8265004"|"8266249"|"8266681"|"8270955"|"8270972"|"8271025"|"8271045"|"8271049"|"8271992"|"8275415"|"8275830"|"8279067"|"8279864"|"8280354"|"8284740"|"8285249"|"8285992").PN.					
L41	279	("8290820"|"8291238"|"8291439"|"8296404"|"8300575"|"8306518"|"8306741"|"8307067"|"8310943"|"8315198"|"8315593"|"8315594"|"8315718"|"8315999"|"8320244"|"8320949"|"8325638"|"8325906"|"8326319"|"8326828"|"8331223"|"8331293"|"8332375"|"8339991"|"8340625"|"8340628"|"8340678"|"8340718"|"8346210"|"8346225"|"8346923"|"8347104"|"8347362"|"8347378"|"8350700"|"8351592"|"8351898"|"8352360"|"8352980"|"8353001"|"8355570"|"8355696"|"8356336"|"8358638"|"8358975"|"8363658"|"8363799"|"8364089"|"8364806"|"8369274"|"8370477"|"8370483"|"8374090"|"8374592"|"8375128"|"8375136"|"8380247"|"8385199"|"8385896"|"8385964"|"8385975"|"8386386"|"8391262"|"8391834"|"8392982"|"8396458"|"8396929"|"8401968"|"8402165"|"8402540"|"8406427"|"8406736"|"8407763"|"8411587"|"8411691"|"8412798"|"8413245"|"8418168"|"8422	(US-PGPUB; USPAT)	AND	ON	ON	2021/06/19 08:20 PM

		988"|"8423016"|"84294 03"|"8437734"|"844201 5"|"8446831"|"8447324" |"8447607"|"8447980"|" 8448015"|"8452858"|"8 457603"|"8461958"|"84 63194"|"8463232"|"846 8337"|"8472371"|"8477 778"|"8478840"|"84830 57"|"8483135"|"848369 4"|"8484327"|"8488597" |"8489110"|"8489720"|" 8494559"|"8495181"|"8 495207"|"8495227"|"84 95360"|"8495700"|"849 5743"|"8499087"|"8500 533"|"8503358"|"85034 55"|"8504032"|"850457 4"|"8504687"|"8504690" |"8504729"|"8505073"|" 8509082"|"8514927"|"8 516552"|"8520589"|"85 20595"|"8521110"|"852 1775"|"8522039"|"8522 249"|"8522337"|"85235 47"|"8526329"|"852635 0"|"8527013"|"8527410" |"8527662"|"8528068"|" 8531954"|"8531995"|"8 532610"|"8533775"|"85 35160"|"8538394"|"853 8421"|"8538458"|"8539 544"|"8543265"|"85438 14"|"8544105"|"854842 7"|"8549173"|"8554876" |"8559369"|"8561138"|" 8565746"|"8566236"|"8 571474"|"8571501"|"85 71598"|"8571993"|"857 2117"|"8572256"|"8583 499"|"8588240"|"85899 55"|"8594665"|"859518 6"|"8600895"|"8601125" |"8605691"|"8615507"|" 8619735"|"8620257"|"8 630925"|"8631428"|"86 34425"|"8635164"|"863 9215"|"8644702"|"8644 813"|"8645518"|"86553 57"|"8656472"|"866085 3"|"8666395"|"8667542" |"8670334"|"8675852"|" 8676682"|"8676925"|"8 693323"|"8694772"|"87 00729"|"8701015"|"870 5361"|"8706863"|"8713 535"|"8713641"|"87193 97"|"8719423"|"872448					

		6"|"8725899"|"8730842"|"8731519"|"8732808"|"8739035"|"8744339"|"8761711"|"8780857"|"8787249"|"8792857"|"8793304"|"8798610"|"8799440"|"8804695"|"8811338"|"8811991"|"8818394"|"8819253"|"8825109"|"8826411"|"8831561"|"8838752"|"8843849"|"8845415"|"8849297"|"8855620"|"8862751"|"8863111"|"8875042"|"8880047"|"8891483"|"8898748"|"8908516"|"8929374"|"8930238"|"8930551"|"8943551"|"8948726"|"8949382"|"8949597"|"8955038"|"8966018"|"8971912"|"8977284"|"8995952"|"9002342"|"9014973"|"9015331"|"9026100"|"9030934"|"9049010"|"9064275"|"9105031"|"9111088"|"9137286"|"9172553"|"9177455"|"9282460"|"9286469"|"9286604"|"9313708"|"9325737"|"9326173"|"9344557"|"9363285"|"9367680"|"9413546"|"9418381"|"9459767"|"9501803"|"9544397"|"9589117"|"9609459"|"9712476"|"9942796"|"9986413"|"RE44412").PN.					
L42	1489	L37 L38 L39 L40 L41 L36	(US-PGPUB; USPAT; USOCR; FPRS; EPO; JPO; DERWENT; IBM_TDB)	OR	OFF	OFF	2021/06/19 08:21 PM
L43	91	secure environment service profile modem adj control link @ad<"20090213"	(US-PGPUB; USPAT; USOCR; FPRS; EPO; JPO; DERWENT; IBM_TDB)	AND	OFF	OFF	2021/06/19 08:35 PM
L44	4392	wireless cellular network secure control channel policy @ad<"20090213"	(US-PGPUB; USPAT; USOCR; FPRS; EPO; JPO; DERWENT; IBM_TDB)	AND	OFF	OFF	2021/06/19 09:28 PM
L45	2037	L27 L44	(US-PGPUB; USPAT; USOCR; FPRS; EPO; JPO; DERWENT; IBM_TDB)	AND	OFF	OFF	2021/06/19 09:28 PM
L46	97	(Headwater Research).as.	(US-PGPUB; USPAT; USOCR; FIT (AU, AP, AT, BE, BG, BR, BY,	AND	OFF	OFF	2022/03/11 05:12 PM

			CA, CH, CN, CS, CU, CZ, DD, DE, DK, EA, EE, EP, ES, FI, FR, GB, HR, HU, ID, IE, IL, IS, IT, JP, KR, LT, LU, LV, MA, OA, RU, SU, WO, MC, MD, MY, NL, NO, NZ, PH, PL, PT, RO, RS, SE, SG, SI, SK, TH, TN, TR, TW, UA, VN); FPRS; EPO; JPO; DERWENT; IBM_TDB)				
L47	1424	(Raleigh Gregory G).in.	(US-PGPUB; USPAT; USOCR; FIT (AU, AP, AT, BE, BG, BR, BY, CA, CH, CN, CS, CU, CZ, DD, DE, DK, EA, EE, EP, ES, FI, FR, GB, HR, HU, ID, IE, IL, IS, IT, JP, KR, LT, LU, LV, MA, OA, RU, SU, WO, MC, MD, MY, NL, NO, NZ, PH, PL, PT, RO, RS, SE, SG, SI, SK, TH, TN, TR, TW, UA, VN); FPRS; EPO; JPO; DERWENT; IBM_TDB)	AND	OFF	OFF	2022/03/11 05:12 PM
L48	2348063	(G06F15/177 G06Q10/06315 G06Q10/06375 G06Q20/102 G06Q20/20 G06Q20/32 G06Q20/40 G06Q30/0207 G06Q30/0241 G06Q30/0283 G06Q30/0284 G06Q30/04 G06Q30/0601 G06Q40/00 G06Q40/12 H04L12/14 H04L12/1407 H04L41/0806 H04L41/0876 H04L41/0893 H04L41/5003 H04L41/5025 H04L41/5054 H04L47/20 H04L47/2408 H04L51/046 H04L63/0236 H04L63/04 H04L63/0428 H04L63/08	(US-PGPUB; USPAT; USOCR; FIT (AU, AP, AT, BE, BG, BR, BY, CA, CH, CN, CS, CU, CZ, DD, DE, DK, EA, EE, EP, ES, FI, FR, GB, HR, HU, ID, IE, IL, IS, IT, JP, KR, LT, LU, LV, MA, OA, RU, SU, WO, MC, MD, MY, NL, NO, NZ, PH, PL, PT, RO, RS, SE, SG, SI, SK, TH, TN, TR, TW, UA, VN); FPRS; EPO; JPO; DERWENT; IBM_TDB)	OR	OFF	OFF	2022/03/11 06:38 PM

		H04L63/0853 H04L63/0892 H04L63/10 H04L63/20 H04L67/145 H04L67/26 H04L67/2819 H04L67/306 H04L67/327 H04L67/34 H04L9/32 H04L9/3247 H04M15/00 H04M15/49 H04M15/58 H04M15/61 H04M15/66 H04M15/80 H04M15/8055 H04M15/88 H04M2215/0188 H04W12/00 H04W12/02 H04W12/037 H04W12/06 H04W12/08 H04W24/08 H04W28/02 H04W28/0215 H04W28/0268 H04W28/12 H04W4/02 H04W4/12 H04W4/18 H04W4/20 H04W4/24 H04W4/50 H04W48/14 H04W48/16 H04W72/0453 H04W8/02 H04W8/18 H04W8/20 H04W84/04 H04W84/042 H04W84/12 H04W88/06 H04W88/08 Y02P90/80).cpc.					
L49	137	secure environment service profile modem ADJ control link @ad<"20090213"	(US-PGPUB; USPAT; USOCR; FIT (AU, AP, AT, BE, BG, BR, BY, CA, CH, CN, CS, CU, CZ, DD, DE, DK, EA, EE, EP, ES, FI, FR, GB, HR, HU, ID, IE, IL, IS, IT, JP, KR, LT, LU, LV, MA, OA, RU, SU, WO, MC, MD, MY, NL, NO, NZ, PH, PL, PT, RO, RS, SE, SG, SI, SK, TH, TN, TR, TW, UA, VN); FPRS; EPO; JPO; DERWENT; IBM_TDB)	AND	OFF	OFF	2022/03/11 06:39 PM
L50	10163	wireless cellular network secure control channel policy @ad<"20090213"	(US-PGPUB; USPAT; USOCR; FIT (AU, AP, AT, BE, BG, BR, BY, CA, CH, CN, CS, CU, CZ, DD, DE, DK, EA,	AND	OFF	OFF	2022/03/11 06:39 PM

			EE, EP, ES, FI, FR, GB, HR, HU, ID, IE, IL, IS, IT, JP, KR, LT, LU, LV, MA, OA, RU, SU, WO, MC, MD, MY, NL, NO, NZ, PH, PL, PT, RO, RS, SE, SG, SI, SK, TH, TN, TR, TW, UA, VN); FPRS; EPO; JPO; DERWENT; IBM_TDB)				
L51	4775	L48 L50	(US-PGPUB; USPAT; USOCR; FIT (AU, AP, AT, BE, BG, BR, BY, CA, CH, CN, CS, CU, CZ, DD, DE, DK, EA, EE, EP, ES, FI, FR, GB, HR, HU, ID, IE, IL, IS, IT, JP, KR, LT, LU, LV, MA, OA, RU, SU, WO, MC, MD, MY, NL, NO, NZ, PH, PL, PT, RO, RS, SE, SG, SI, SK, TH, TN, TR, TW, UA, VN); FPRS; EPO; JPO; DERWENT; IBM_TDB)	AND	OFF	OFF	2022/03/11 06:39 PM
L54	5	("10021251" "8630630" "9204282" "20080120174" "20120011017").pn.	(US-PGPUB; USPAT)	OR	OFF	OFF	2022/03/11 06:41 PM
L55	2354126	726/1.ccls. (G06F15/177 G06Q10/06315 G06Q10/06375 G06Q20/102 G06Q20/20 G06Q20/32 G06Q20/40 G06Q30/0207 G06Q30/0241 G06Q30/0283 G06Q30/0284 G06Q30/04 G06Q30/0601 G06Q40/00 G06Q40/12 H04L12/14 H04L12/1407 H04L41/0806 H04L41/0876 H04L41/0893 H04L41/5003 H04L41/5025 H04L41/5054 H04L47/20 H04L47/2408 H04L51/046 H04L63/0236	(US-PGPUB; USPAT; USOCR; FIT (AP, AT, AU, BE, BG, BR, BY, CA, CH, CN, CS, CU, CZ, DD, DE, DK, EA, EE, EP, ES, FI, FR, GB, HR, HU, ID, IE, IL, IS, IT, JP, KR, LT, LU, LV, MA, MC, MD, MY, NL, NO, NZ, OA, PH, PL, PT, RO, RS, RU, SE, SG, SI, SK, SU, TH, TN, TR, TW, UA, VN, WO); FPRS; EPO; JPO; DERWENT; IBM_TDB)	OR	OFF	OFF	2022/03/11 06:49 PM

		H04L63/04 H04L63/0428 H04L63/08 H04L63/0853 H04L63/0892 H04L63/10 H04L63/20 H04L67/145 H04L67/26 H04L67/2819 H04L67/306 H04L67/327 H04L67/34 H04L9/32 H04L9/3247 H04M15/00 H04M15/49 H04M15/58 H04M15/61 H04M15/66 H04M15/80 H04M15/8055 H04M15/88 H04M2215/0188 H04W12/00 H04W12/02 H04W12/037 H04W12/06 H04W12/08 H04W24/08 H04W28/02 H04W28/0215 H04W28/0268 H04W28/12 H04W4/02 H04W4/12 H04W4/18 H04W4/20 H04W4/24 H04W4/50 H04W48/14 H04W48/16 H04W72/0453 H04W8/02 H04W8/18 H04W8/20 H04W84/04 H04W84/042 H04W84/12 H04W88/06 H04W88/08 Y02P90/80).cpc.					
L56	609350	secure environment @ad<"20090213"	(US-PGPUB; USPAT; USOCR; FIT (AP, AT, AU, BE, BG, BR, BY, CA, CH, CN, CS, CU, CZ, DD, DE, DK, EA, EE, EP, ES, FI, FR, GB, HR, HU, ID, IE, IL, IS, IT, JP, KR, LT, LU, LV, MA, MC, MD, MY, NL, NO, NZ, OA, PH, PL, PT, RO, RS, RU, SE, SG, SI, SK, SU, TH, TN, TR, TW, UA, VN, WO); FPRS; EPO; JPO; DERWENT; IBM_TDB)	AND	OFF	OFF	2022/03/11 08:09 PM
L59	344	(secure ADJ memory) environment service	(US-PGPUB; USPAT; USOCR; FIT (AP, AT,	AND	OFF	OFF	2022/03/11 08:10 PM

		profile policy monitor @ad<"20090213"	AU, BE, BG, BR, BY, CA, CH, CN, CS, CU, CZ, DD, DE, DK, EA, EE, EP, ES, FI, FR, GB, HR, HU, ID, IE, IL, IS, IT, JP, KR, LT, LU, LV, MA, MC, MD, MY, NL, NO, NZ, OA, PH, PL, PT, RO, RS, RU, SE, SG, SI, SK, SU, TH, TN, TR, TW, UA, VN, WO); FPRS; EPO; JPO; DERWENT; IBM_TDB)				
L60	219	L48 l59	(US-PGPUB; USPAT; USOCR; FIT (AP, AT, AU, BE, BG, BR, BY, CA, CH, CN, CS, CU, CZ, DD, DE, DK, EA, EE, EP, ES, FI, FR, GB, HR, HU, ID, IE, IL, IS, IT, JP, KR, LT, LU, LV, MA, MC, MD, MY, NL, NO, NZ, OA, PH, PL, PT, RO, RS, RU, SE, SG, SI, SK, SU, TH, TN, TR, TW, UA, VN, WO); FPRS; EPO; JPO; DERWENT; IBM_TDB)	AND	OFF	OFF	2022/03/11 08:16 PM
L61	1076	(secure ADJ (memory OR storage)) environment service profile polic$3 monitor$3 @ad<"20090213"	(US-PGPUB; USPAT; USOCR; FIT (AP, AT, AU, BE, BG, BR, BY, CA, CH, CN, CS, CU, CZ, DD, DE, DK, EA, EE, EP, ES, FI, FR, GB, HR, HU, ID, IE, IL, IS, IT, JP, KR, LT, LU, LV, MA, MC, MD, MY, NL, NO, NZ, OA, PH, PL, PT, RO, RS, RU, SE, SG, SI, SK, SU, TH, TN, TR, TW, UA, VN, WO); FPRS; EPO; JPO; DERWENT; IBM_TDB)	AND	OFF	OFF	2022/03/11 08:21 PM
L62	548	L48 L61	(US-PGPUB; USPAT; USOCR; FIT (AP, AT, AU, BE, BG, BR, BY, CA, CH, CN, CS, CU, CZ, DD, DE, DK, EA, EE, EP, ES, FI, FR, GB, HR, HU, ID, IE, IL, IS, IT, JP, KR, LT, LU, LV, MA, MC, MD, MY, NL, NO, NZ, OA, PH, PL, PT, RO, RS, RU, SE,	AND	OFF	OFF	2022/03/11 08:21 PM

			SG, SI, SK, SU, TH, TN, TR, TW, UA, VN, WO); FPRS; EPO; JPO; DERWENT; IBM_TDB)				

PE2E SEARCH - Search History (Interference)

Ref #	Hits	Search Query	DBs	Default Operator	Plurals	British Equivalents	Time Stamp
N23	3076	(726/1).CCLS.	(USPAT)	AND	ON	ON	2020/01/06 05:55 AM
N24	163754	(G06Q40/12 H04M15/00 H04L12/14 H04L41/5054 H04L47/20 H04M15/88 H04W12/0017 G06Q10/06315 G06Q30/0601 H04L67/145 H04W8/18 H04W72/0453 H04L9/3247 H04L63/08 H04W8/20 H04M15/58 H04M15/61 H04W88/08 H04L9/32 H04L41/0893 H04L67/306 G06Q10/06375 H04L67/327 H04W4/50 H04W12/02 H04W24/08 H04W28/02 H04W4/02 H04W4/18 H04W28/0215 H04L67/26 H04W12/08 H04W48/14 G06Q40/00 H04L41/5003 H04L63/0892 H04W4/12 G06Q30/0283 H04M15/80 G06Q20/102 G06Q30/0241 H04L63/0853 H04W4/20 H04W28/12 H04W48/16 H04W12/00 G06F15/177 G06Q30/04 H04L63/0428 H04L47/2408 H04L63/0236 H04W12/06 H04W28/0268 G06Q20/20 H04L41/0806 H04L51/046 H04L63/04 H04W4/24	(USPAT)	OR	OFF	OFF	2020/01/06 05:55 AM

		G06Q30/0207 G06Q30/0284 H04L63/10 H04L63/20 G06Q20/40 H04W84/04 H04L67/2819 H04W88/06 Y02P90/86 H04L41/0876 H04L67/34 H04W84/042 H04W8/02 H04L41/5025 H04M2215/0188 H04W84/12).cpc.					
N25	0	(secure environment service profile modem control link).clm.	(USPAT)	AND	OFF	OFF	2020/01/06 06:17 AM
N26	508307	(G06F15/177 G06Q10/06315 G06Q10/06375 G06Q20/102 G06Q20/20 G06Q20/32 G06Q20/40 G06Q30/0207 G06Q30/0241 G06Q30/0283 G06Q30/0284 G06Q30/04 G06Q30/0601 G06Q40/00 G06Q40/12 H04L12/14 H04L12/1407 H04L41/0806 H04L41/0876 H04L41/0893 H04L41/5003 H04L41/5025 H04L41/5054 H04L47/20 H04L47/2408 H04L51/046 H04L63/0236 H04L63/04 H04L63/0428 H04L63/08 H04L63/0853 H04L63/0892 H04L63/10 H04L63/20 H04L67/145 H04L67/26 H04L67/2819 H04L67/306 H04L67/327 H04L67/34 H04L9/32 H04L9/3247 H04M15/00 H04M15/49 H04M15/58 H04M15/61 H04M15/66 H04M15/80 H04M15/8055 H04M15/88	(US-PGPUB; USPAT)	OR	OFF	OFF	2022/03/11 06:48 PM

		H04M2215/0188 H04W12/00 H04W12/02 H04W12/037 H04W12/06 H04W12/08 H04W24/08 H04W28/02 H04W28/0215 H04W28/0268 H04W28/12 H04W4/02 H04W4/12 H04W4/18 H04W4/20 H04W4/24 H04W4/50 H04W48/14 H04W48/16 H04W72/0453 H04W8/02 H04W8/18 H04W8/20 H04W84/04 H04W84/042 H04W84/12 H04W88/06 H04W88/08 Y02P90/80).cpc.					
N27	511773	726/1.ccls. (G06F15/177 G06Q10/06315 G06Q10/06375 G06Q20/102 G06Q20/20 G06Q20/32 G06Q20/40 G06Q30/0207 G06Q30/0241 G06Q30/0283 G06Q30/0284 G06Q30/04 G06Q30/0601 G06Q40/00 G06Q40/12 H04L12/14 H04L12/1407 H04L41/0806 H04L41/0876 H04L41/0893 H04L41/5003 H04L41/5025 H04L41/5054 H04L47/20 H04L47/2408 H04L51/046 H04L63/0236 H04L63/04 H04L63/0428 H04L63/08 H04L63/0853 H04L63/0892 H04L63/10 H04L63/20 H04L67/145 H04L67/26 H04L67/2819 H04L67/306	(US-PGPUB; USPAT)	OR	OFF	OFF	2022/03/11 06:48 PM

		H04L67/327 H04L67/34 H04L9/32 H04L9/3247 H04M15/00 H04M15/49 H04M15/58 H04M15/61 H04M15/66 H04M15/80 H04M15/8055 H04M15/88 H04M2215/0188 H04W12/00 H04W12/02 H04W12/037 H04W12/06 H04W12/08 H04W24/08 H04W28/02 H04W28/0215 H04W28/0268 H04W28/12 H04W4/02 H04W4/12 H04W4/18 H04W4/20 H04W4/24 H04W4/50 H04W48/14 H04W48/16 H04W72/0453 H04W8/02 H04W8/18 H04W8/20 H04W84/04 H04W84/042 H04W84/12 H04W88/06 H04W88/08 Y02P90/80).cpc.					
N28	21	(secure memory environment service profile policy).clm.	(US-PGPUB; USPAT)	AND	OFF	OFF	2022/03/11 08:19 PM

Bibliographic Data

Application No: 16/907,887

Foreign Priority claimed: ○ Yes ◉ No

35 USC 119 (a-d) conditions met: ☐ Yes ☑ No ☐ Met After Allowance

Verified and Acknowledged: /BENJAMIN A KAPLAN/ (Examiner's Signature) [ ] (Initials)

Title: Security Techniques for Device Assisted Services

FILING or 371(c) DATE	CLASS	GROUP ART UNIT	ATTORNEY DOCKET NO.
06/22/2020 **RULE**	726	2434	RALEP025C1C1C1C1

APPLICANTS

Headwater Research LLC, Tyler, TX,

INVENTORS

Gregory G. Raleigh, Woodside, CA, UNITED STATES

CONTINUING DATA

This application is a CON of 16034362 07/13/2018 PAT 10694385

16034362 is a CON of 14948065 11/20/2015 PAT 10028144

14948065 is a CON of 13737748 01/09/2013 PAT 9198042

13737748 is a CON of 12694445 01/27/2010 PAT 8391834

12694445 has PRO of 61252151 10/15/2009

12694445 is a CIP of 12380780 03/02/2009 PAT 8839388

12380780 has PRO of 61207739 02/13/2009

12380780 has PRO of 61207393 02/10/2009

12380780 has PRO of 61206944 02/04/2009

12380780 has PRO of 61206354 01/28/2009

FOREIGN APPLICATIONS

IF REQUIRED, FOREIGN LICENSE GRANTED**

06/30/2020

**** SMALL ENTITY ****

STATE OR COUNTRY

UNITED STATES

ADDRESS

Headwater Research LLC

110 North College Avenue

Suite 1116
Tyler, TX 75702
UNITED STATES

FILING FEE RECEIVED

$865

Doc code: IDS
Doc description: Information Disclosure Statement (IDS) Filed

PTO/SB/08a (02-18)
Approved for use through 11/30/2020. OMB 0651-0031
U.S. Patent and Trademark Office; U.S. DEPARTMENT OF COMMERCE
Under the Paperwork Reduction Act of 1995, no persons are required to respond to a collection of information unless it contains a valid OMB control number.

INFORMATION DISCLOSURE STATEMENT BY APPLICANT (Not for submission under 37 CFR 1.99)		
	Application Number	16907887
	Filing Date	2020-06-22
	First Named Inventor	RALEIGH, GREGORY
	Art Unit	2434
	Examiner Name	KAPLAN, BENJAMIN
	Attorney Docket Number	RALEP025C1C1C1C1

U.S.PATENTS Remove

Examiner Initial*	Cite No	Patent Number	Kind Code[1]	Issue Date	Name of Patentee or Applicant of cited Document	Pages,Columns,Lines where Relevant Passages or Relevant Figures Appear
	1	10021251	B2	2018-07-10	Aaron et al.	
	2	8630630	B2	2014-01-14	Raleigh	
	3	9204282	B2	2015-12-01	Raleigh	

If you wish to add additional U.S. Patent citation information please click the Add button. Add

U.S.PATENT APPLICATION PUBLICATIONS Remove

Examiner Initial*	Cite No	Publication Number	Kind Code[1]	Publication Date	Name of Patentee or Applicant of cited Document	Pages,Columns,Lines where Relevant Passages or Relevant Figures Appear
	1	20080120174	A1	2008-05-22	Li	
	2	20120011017	A1	2012-01-12	Wolcott et al.	

If you wish to add additional U.S. Published Application citation information please click the Add button. Add

FOREIGN PATENT DOCUMENTS Remove

Examiner Initial*	Cite No	Foreign Document Number[3]	Country Code[2] i	Kind Code[4]	Publication Date	Name of Patentee or Applicant of cited Document	Pages,Columns,Lines where Relevant Passages or Relevant Figures Appear	T[5]

ALL REFERENCES CONSIDERED EXCEPT WHERE LINED THROUGH. /B.A.K/

INFORMATION DISCLOSURE STATEMENT BY APPLICANT (Not for submission under 37 CFR 1.99)		
	Application Number	16907887
	Filing Date	2020-06-22
	First Named Inventor	RALEIGH, GREGORY
	Art Unit	2434
	Examiner Name	KAPLAN, BENJAMIN
	Attorney Docket Number	RALEP025C1C1C1C1

	1							

If you wish to add additional Foreign Patent Document citation information please click the Add button Add

NON-PATENT LITERATURE DOCUMENTS Remove

Examiner Initials*	Cite No	Include name of the author (in CAPITAL LETTERS), title of the article (when appropriate), title of the item (book, magazine, journal, serial, symposium, catalog, etc), date, pages(s), volume-issue number(s), publisher, city and/or country where published.	T[5]
	1		

If you wish to add additional non-patent literature document citation information please click the Add button Add

EXAMINER SIGNATURE

Examiner Signature	/BENJAMIN A KAPLAN/	Date Considered	03/11/2022

*EXAMINER: Initial if reference considered, whether or not citation is in conformance with MPEP 609. Draw line through a citation if not in conformance and not considered. Include copy of this form with next communication to applicant.

[1] See Kind Codes of USPTO Patent Documents at www.USPTO.GOV or MPEP 901.04. [2] Enter office that issued the document, by the two-letter code (WIPO Standard ST.3). [3] For Japanese patent documents, the indication of the year of the reign of the Emperor must precede the serial number of the patent document. [4] Kind of document by the appropriate symbols as indicated on the document under WIPO Standard ST.16 if possible. [5] Applicant is to place a check mark here if English language translation is attached.

ALL REFERENCES CONSIDERED EXCEPT WHERE LINED THROUGH. /B.A.K/

INFORMATION DISCLOSURE STATEMENT BY APPLICANT (Not for submission under 37 CFR 1.99)		
	Application Number	16907887
	Filing Date	2020-06-22
	First Named Inventor	RALEIGH, GREGORY
	Art Unit	2434
	Examiner Name	KAPLAN, BENJAMIN
	Attorney Docket Number	RALEP025C1C1C1C1

CERTIFICATION STATEMENT

Please see 37 CFR 1.97 and 1.98 to make the appropriate selection(s):

That each item of information contained in the information disclosure statement was first cited in any communication from a foreign patent office in a counterpart foreign application not more than three months prior to the filing of the information disclosure statement. See 37 CFR 1.97(e)(1).

OR

☐ That no item of information contained in the information disclosure statement was cited in a communication from a foreign patent office in a counterpart foreign application, and, to the knowledge of the person signing the certification after making reasonable inquiry, no item of information contained in the information disclosure statement was known to any individual designated in 37 CFR 1.56(c) more than three months prior to the filing of the information disclosure statement. See 37 CFR 1.97(e)(2).

See attached certification statement.

☒ The fee set forth in 37 CFR 1.17 (p) has been submitted herewith.

☒ A certification statement is not submitted herewith.

SIGNATURE

A signature of the applicant or representative is required in accordance with CFR 1.33, 10.18. Please see CFR 1.4(d) for the form of the signature.

Signature	/James E. Harris/	Date (YYYY-MM-DD)	2021-12-20
Name/Print	James E. Harris	Registration Number	40013

This collection of information is required by 37 CFR 1.97 and 1.98. The information is required to obtain or retain a benefit by the public which is to file (and by the USPTO to process) an application. Confidentiality is governed by 35 U.S.C. 122 and 37 CFR 1.14. This collection is estimated to take 1 hour to complete, including gathering, preparing and submitting the completed application form to the USPTO. Time will vary depending upon the individual case. Any comments on the amount of time you require to complete this form and/or suggestions for reducing this burden, should be sent to the Chief Information Officer, U.S. Patent and Trademark Office, U.S. Department of Commerce, P.O. Box 1450, Alexandria, VA 22313-1450. DO NOT SEND FEES OR COMPLETED FORMS TO THIS ADDRESS. **SEND TO: Commissioner for Patents, P.O. Box 1450, Alexandria, VA 22313-1450.**

Privacy Act Statement

The Privacy Act of 1974 (P.L. 93-579) requires that you be given certain information in connection with your submission of the attached form related to a patent application or patent. Accordingly, pursuant to the requirements of the Act, please be advised that: (1) the general authority for the collection of this information is 35 U.S.C. 2(b)(2); (2) furnishing of the information solicited is voluntary; and (3) the principal purpose for which the information is used by the U.S. Patent and Trademark Office is to process and/or examine your submission related to a patent application or patent. If you do not furnish the requested information, the U.S. Patent and Trademark Office may not be able to process and/or examine your submission, which may result in termination of proceedings or abandonment of the application or expiration of the patent.

The information provided by you in this form will be subject to the following routine uses:

1. The information on this form will be treated confidentially to the extent allowed under the Freedom of Information Act (5 U.S.C. 552) and the Privacy Act (5 U.S.C. 552a). Records from this system of records may be disclosed to the Department of Justice to determine whether the Freedom of Information Act requires disclosure of these record s.

2. A record from this system of records may be disclosed, as a routine use, in the course of presenting evidence to a court, magistrate, or administrative tribunal, including disclosures to opposing counsel in the course of settlement negotiations.

3. A record in this system of records may be disclosed, as a routine use, to a Member of Congress submitting a request involving an individual, to whom the record pertains, when the individual has requested assistance from the Member with respect to the subject matter of the record.

4. A record in this system of records may be disclosed, as a routine use, to a contractor of the Agency having need for the information in order to perform a contract. Recipients of information shall be required to comply with the requirements of the Privacy Act of 1974, as amended, pursuant to 5 U.S.C. 552a(m).

5. A record related to an International Application filed under the Patent Cooperation Treaty in this system of records may be disclosed, as a routine use, to the International Bureau of the World Intellectual Property Organization, pursuant to the Patent Cooperation Treaty.

6. A record in this system of records may be disclosed, as a routine use, to another federal agency for purposes of National Security review (35 U.S.C. 181) and for review pursuant to the Atomic Energy Act (42 U.S.C. 218(c)).

7. A record from this system of records may be disclosed, as a routine use, to the Administrator, General Services, or his/her designee, during an inspection of records conducted by GSA as part of that agency's responsibility to recommend improvements in records management practices and programs, under authority of 44 U.S.C. 2904 and 2906. Such disclosure shall be made in accordance with the GSA regulations governing inspection of records for this purpose, and any other relevant (i.e., GSA or Commerce) directive. Such disclosure shall not be used to make determinations about individuals.

8. A record from this system of records may be disclosed, as a routine use, to the public after either publication of the application pursuant to 35 U.S.C. 122(b) or issuance of a patent pursuant to 35 U.S.C. 151. Further, a record may be disclosed, subject to the limitations of 37 CFR 1.14, as a routine use, to the public if the record was filed in an application which became abandoned or in which the proceedings were terminated and which application is referenced by either a published application, an application open to public inspections or an issued patent.

9. A record from this system of records may be disclosed, as a routine use, to a Federal, State, or local law enforcement agency, if the USPTO becomes aware of a violation or potential violation of law or regulation.

ALL REFERENCES CONSIDERED EXCEPT WHERE LINED THROUGH. /B.A.K/

PTO/SB/06 (09-11)
Approved for use through 1/31/2014. OMB 0651-0032
U.S. Patent and Trademark Office; U.S. DEPARTMENT OF COMMERCE
Under the Paperwork Reduction Act of 1995, no persons are required to respond to a collection of information unless it displays a valid OMB control number.

PATENT APPLICATION FEE DETERMINATION RECORD Substitute for Form PTO-875	Application or Docket Number 16/907,887	Filing Date 06/22/2020	☐ To be Mailed

ENTITY: ☐ LARGE ☑ SMALL ☐ MICRO

APPLICATION AS FILED - PART I

FOR	(Column 1) NUMBER FILED	(Column 2) NUMBER EXTRA		RATE ($)	FEE ($)
☐ BASIC FEE (37 CFR 1.16(a), (b), or (c))	N/A	N/A		N/A	
☐ SEARCH FEE (37 CFR 1.16(k), (i), or (m))	N/A	N/A		N/A	
☐ EXAMINATION FEE (37 CFR 1.16(o), (p), or (q))	N/A	N/A		N/A	
TOTAL CLAIMS (37 CFR 1.16(i))	minus 20 =	*		x $50 =	
INDEPENDENT CLAIMS (37 CFR 1.16(h))	minus 3 =	*		x $230 =	
☐ APPLICATION SIZE FEE (37 CFR 1.16(s))	If the specification and drawings exceed 100 sheets of paper, the application size fee due is $310 ($155 for small entity) for each additional 50 sheets or fraction thereof. See 35 U.S.C. 41(a)(1)(G) and 37 CFR 1.16(s).				
☐ MULTIPLE DEPENDENT CLAIM PRESENT (37 CFR 1.16(j))					
* If the difference in column 1 is less than zero, enter "0" in column 2.				TOTAL	

APPLICATION AS AMENDED - PART II

AMENDMENT		(Column 1)		(Column 2)	(Column 3)			
	02/23/2022	CLAIMS REMAINING AFTER AMENDMENT		HIGHEST NUMBER PREVIOUSLY PAID FOR	PRESENT EXTRA		RATE ($)	ADDITIONAL FEE ($)
	Total (37 CFR 1.16(i))	* 12	Minus	** 20	= 0		x $50 =	0
	Independent (37 CFR 1.16(h))	* 1	Minus	*** 3	= 0		x $240 =	0
	☐ Application Size Fee (37 CFR 1.16(s))							
	☐ FIRST PRESENTATION OF MULTIPLE DEPENDENT CLAIM (37 CFR 1.16(j))							
							TOTAL ADD'L FEE	0

AMENDMENT		(Column 1)		(Column 2)	(Column 3)			
		CLAIMS REMAINING AFTER AMENDMENT		HIGHEST NUMBER PREVIOUSLY PAID FOR	PRESENT EXTRA		RATE ($)	ADDITIONAL FEE ($)
	Total (37 CFR 1.16(i))	*	Minus	**	=		x $0 =	
	Independent (37 CFR 1.16(h))	*	Minus	***	=		x $0 =	
	☐ Application Size Fee (37 CFR 1.16(s))							
	☐ FIRST PRESENTATION OF MULTIPLE DEPENDENT CLAIM (37 CFR 1.16(j))							
							TOTAL ADD'L FEE	

* If the entry in column 1 is less than the entry in column 2, write "0" in column 3.	LIE
** If the "Highest Number Previously Paid For" IN THIS SPACE is less than 20, enter "20".	/DONNA D SMALLS LOGAN/
*** If the "Highest Number Previously Paid For" IN THIS SPACE is less than 3, enter "3".	
The "Highest Number Previously Paid For" (Total or Independent) is the highest number found in the appropriate box in column 1.	

This collection of information is required by 37 CFR 1.16. The information is required to obtain or retain a benefit by the public which is to file (and by the USPTO to process) an application. Confidentiality is governed by 35 U.S.C. 122 and 37 CFR 1.14. This collection is estimated to take 12 minutes to complete, including gathering, preparing, and submitting the completed application form to the USPTO. Time will vary depending upon the individual case. Any comments on the amount of time you require to complete this form and/or suggestions for reducing this burden, should be sent to the Chief Information Officer, U.S. Patent and Trademark Office, U.S. Department of Commerce, P.O. Box 1450, Alexandria, VA 22313-1450. DO NOT SEND FEES OR COMPLETED FORMS TO THIS ADDRESS. **SEND TO: Commissioner for Patents, P.O. Box 1450, Alexandria, VA 22313-1450.**

If you need assistance in completing the form, call 1-800-PTO-9199 and select option 2.

Electronic Acknowledgement Receipt

EFS ID:	45061549
Application Number:	16907887
International Application Number:	
Confirmation Number:	2653
Title of Invention:	Security Techniques for Device Assisted Services
First Named Inventor/Applicant Name:	Gregory G. Raleigh
Customer Number:	106963
Filer:	James E. Harris/Jennifer Smith
Filer Authorized By:	James E. Harris
Attorney Docket Number:	RALEP025C1C1C1C1
Receipt Date:	23-FEB-2022
Filing Date:	22-JUN-2020
Time Stamp:	10:46:34
Application Type:	Utility under 35 USC 111(a)

Payment information:

Submitted with Payment	no

File Listing:

Document Number	Document Description	File Name	File Size(Bytes)/ Message Digest	Multi Part /.zip	Pages (if appl.)
1	Claims	NonCompliant_Response.pdf	91317 29ffc49e7a436c6e62b604b7906d85297c0b a7fe	no	4

Warnings:

Information:	
Total Files Size (in bytes):	91317

This Acknowledgement Receipt evidences receipt on the noted date by the USPTO of the indicated documents, characterized by the applicant, and including page counts, where applicable. It serves as evidence of receipt similar to a Post Card, as described in MPEP 503.

<u>New Applications Under 35 U.S.C. 111</u>
If a new application is being filed and the application includes the necessary components for a filing date (see 37 CFR 1.53(b)-(d) and MPEP 506), a Filing Receipt (37 CFR 1.54) will be issued in due course and the date shown on this Acknowledgement Receipt will establish the filing date of the application.
<u>National Stage of an International Application under 35 U.S.C. 371</u>
If a timely submission to enter the national stage of an international application is compliant with the conditions of 35 U.S.C. 371 and other applicable requirements a Form PCT/DO/EO/903 indicating acceptance of the application as a national stage submission under 35 U.S.C. 371 will be issued in addition to the Filing Receipt, in due course.
<u>New International Application Filed with the USPTO as a Receiving Office</u>
If a new international application is being filed and the international application includes the necessary components for an international filing date (see PCT Article 11 and MPEP 1810), a Notification of the International Application Number and of the International Filing Date (Form PCT/RO/105) will be issued in due course, subject to prescriptions concerning national security, and the date shown on this Acknowledgement Receipt will establish the international filing date of the application.

IN THE UNITED STATES PATENT AND TRADEMARK OFFICE

In re Application of:	Raleigh	Examiner:	Kaplan, Benjamin
Serial No.:	16/907,887	Art Unit:	2434
Filed:	June 22, 2020	Conf. No.:	2653
Title:	Security Techniques for Device Assisted Services		

Mail Stop Office Action
Commissioner for Patents
P.O. Box 1450
Alexandria, VA 22313-1450

RESPONSE TO NOTICE OF NON-COMPLIANT AMENDMENT

In response to the Notice of Non-Compliant Amendment dated January 7, 2022, applicant hereby provides a complete listing of claims:

A Listing of the Claims begins on page 2.

AMENDMENTS TO THE CLAIMS

1. (Canceled).

2. (Previously Presented) A method of operating a wireless end-user device, the method comprising:

connecting from a secure modem subsystem to a wireless cellular network;

connecting a first secure control channel from the secure modem subsystem through the wireless cellular network to a network service controller;

connecting a second secure control channel from a secure execution environment, separately secure from the secure modem subsystem, through the secure modem subsystem and the wireless cellular network to the network service controller;

receiving at the secure execution environment via the second control channel one or more messages from the network service controller, the one or more messages comprising one or more service policy settings;

storing the one or more service policy settings in a secure memory partition accessible only from the secure execution environment; and

enforcing, at least in part from the secure execution environment, a network service profile comprising the one or more service policy settings, to control the wireless end-user device use of a service on the wireless cellular network.

3. (Previously Presented) The method of claim 2, wherein the network service profile is associated with a service plan that provides for access to the service on the wireless network

4. (Previously Presented) The method of claim 2, wherein the secure modem subsystem comprises a modem control link and a modem local channel, and the first secure control channel connects the modem control link to the network service controller through the modem local channel, and wherein the secure execution environment comprises a host service control link, the second secure control channel coupled to the host service control link, the modem local channel

providing secure communication between the modem control link and the host service control link.

5. (Previously Presented) The method of claim 2, wherein the secure modem subsystem further comprises a modem agent accessible only by the network service controller through the first control channel.

6. (Previously Presented) The method of claim 5, wherein the modem agent comprises a service measurement point for use of the service.

7. (Previously Presented) The method of claim 6, further comprising the modem agent communicating a report of the use of the service to the network service controller through the first control channel.

8. (Previously Presented) The method of claim 7, further comprising the secure execution environment separately communicating a report of the monitored use of the service through the second control channel.

9. (Previously Presented) The method of claim 2, wherein the one or more service policy settings include an access control setting, a traffic control setting, and/or an admission control setting.

10. (Previously Presented) The method of claim 2, wherein the one or more service policy settings include a network or device management communication setting.

11. (Previously Presented) The method of claim 2, wherein the secure execution environment is implemented at least in part as a hardware partition.

12. (Previously Presented) The method of claim 2, wherein the secure execution environment is implemented at least in part as a software partition.

13. (Previously Presented) The method of claim 2, wherein the secure execution environment is implemented at least in part in a virtual machine executed on a processor.

Applicant respectfully requests reconsideration, in view of the claims above and the remarks filed on December 21, 2021. The Commissioner is authorized to charge any fee deficiency or credit any overpayment to Deposit Account 50-5876.

Respectfully submitted,

Date: February 23, 2022

By: /James E. Harris/

James E. Harris
Reg. No. 40,013
Patent Counsel
Headwater Research LLC
110 N. College Ave., Suite 1116
Tyler, Texas 75702
(903) 201-6212

CERTIFICATE OF ELECTRONIC TRANSMISSION

I hereby certify that this paper (along with any paper referred to as being attached or enclosed) is being filed electronically via EFS-Web addressed to the Commissioner for Patents on:

Date: February 23, 2022 By: /Jennifer Smith/
Jennifer Smith

UNITED STATES PATENT AND TRADEMARK OFFICE

UNITED STATES DEPARTMENT OF COMMERCE
United States Patent and Trademark Office
Address: COMMISSIONER FOR PATENTS
P.O. Box 1450
Alexandria, Virginia 22313-1450
www.uspto.gov

APPLICATION NO.	FILING DATE	FIRST NAMED INVENTOR	ATTORNEY DOCKET NO.	CONFIRMATION NO.
16/907,887	06/22/2020	Gregory G. Raleigh	RALEP025C1C1C1C1	2653

106963 7590 01/07/2022
Headwater Research LLC
110 North College Avenue
Suite 1116
Tyler, TX 75702

EXAMINER
KAPLAN, BENJAMIN A

ART UNIT	PAPER NUMBER
2434	

NOTIFICATION DATE	DELIVERY MODE
01/07/2022	ELECTRONIC

Please find below and/or attached an Office communication concerning this application or proceeding.

The time period for reply, if any, is set in the attached communication.

Notice of the Office communication was sent electronically on above-indicated "Notification Date" to the following e-mail address(es):

patent@headwaterllc.com

PTOL-90A (Rev. 04/07)

Notice of Non-Compliant Amendment (37 CFR 1.121)	Application No. 16/907,887	Applicant(s) Raleigh, Gregory G.
	Art Unit OMBL	AIA (FITF) Status No

-- The MAILING DATE of this communication appears on the cover sheet with the correspondence address --

The amendment document filed on 12/21/2021 is considered non-compliant because it has failed to meet the requirements of 37 CFR 1.121 or 1.4. In order for the amendment document to be compliant, correction of the following item(s) is required.

THE FOLLOWING MARKED (X) ITEM(S) CAUSE THE AMENDMENT DOCUMENT TO BE NON-COMPLIANT:

- ☐ 1. Amendments to the specification:
  - ☐ A. Amended paragraph(s) do not include markings.
  - ☐ B. New paragraph(s) should not be underlined.
  - ☐ C. Other _____ .
- ☐ 2. Abstract:
  - ☐ A.Not presented on a separate sheet. 37 CFR 1.72.
  - ☐ B.Other _____ .
- ☐ 3. Amendments to the drawings:
  - ☐ A. The drawings are not properly identified in the top margin as "Replacement Sheet", "New Sheet", or "Annotated Sheet" as required by 37 CFR 1.121(d).
  - ☐ B. The practice of submitting proposed drawing correction has been eliminated. Replacement drawings showing amended figures, without markings, in compliance with 37 CFR 1.84 are required .
  - ☐ C. Other _____ .
- ☑ 4. Amendments to the claims:
  - ☑ A. A complete listing of all of the claims is not present.
  - ☐ B. The listing of claims does not include the text of all pending claims (including withdrawn claims)
  - ☑ C. Each claim has not been provided with the proper status identifier, and as such, the individual status of each claim cannot be identified. Note: the status of every claim must be indicated after its claim number by using one of the following status identifiers: (Original), (Currently amended), (Canceled), (Previously presented), (New), (Not entered), (Withdrawn) and (Withdrawn-currently amended).
  - ☐ D. The claims of this amendment paper have not been presented in ascending numerical order.
  - ☑ E. Other: Claim 1 is missing .
- ☐ 5. Other (e.g., the amendment is unsigned or not signed in accordance with 37 CFR 1.4): For further explanation of the amendment format required by 37 CFR 1.121, see MPEP § 714.

TIME PERIODS FOR FILING A REPLY TO THIS NOTICE:

1. Applicant is given **no new time period** if the non-compliant amendment is an after-final amendment or an amendment filed after allowance, or a drawing submission (only) If applicant wishes to resubmit the non-compliant after-final amendment with corrections, the **entire corrected amendment** must be resubmitted.
2. Applicant is given **two months** from the mail date of this notice to supply the correction, if the non-compliant amendment is one of the following: a preliminary amendment, a non-final amendment (including a submission for a request for continued examination (RCE) under 37 CFR 1.114), a supplemental amendment filed within a suspension period under 37 CFR 1.103(a) or (c), and an amendment filed in response to a Quayle action. If any of above boxes 1 to 4 are checked, the correction required is only the corrected section of the non-compliant amendment in compliance with 37 CFR 1.121.

Extensions of time are available under 37 CFR 1.136(a) only if the non-compliant amendment is a non-final amendment or an amendment filed in response to a *Quayle* action.

Failure to timely respond to this notice will result in:

Abandonment of the application if the non-compliant amendment is a non-final amendment or an amendment filed in response to a *Quayle* action; or

Non-entry of the amendment if the non-compliant amendment is a preliminary amendment or supplemental amendment.

Legal Instruments Examiner (LIE), if applicable /NICOL D SCOTT/ Telephone No: (571)272-1045

UNITED STATES PATENT AND TRADEMARK OFFICE

UNITED STATES DEPARTMENT OF COMMERCE
United States Patent and Trademark Office
Address: COMMISSIONER FOR PATENTS
P.O. Box 1450
Alexandria, Virginia 22313-1450
www.uspto.gov

APPLICATION NUMBER	FILING OR 371(C) DATE	FIRST NAMED APPLICANT	ATTY. DOCKET NO./TITLE
16/907,887	06/22/2020	Gregory G. Raleigh	RALEP025C1C1C1C1

CONFIRMATION NO. 2653

POA ACCEPTANCE LETTER

106963
Headwater Research LLC
110 North College Avenue
Suite 1116
Tyler, TX 75702

OC000000130631848

Date Mailed: 12/22/2021

NOTICE OF ACCEPTANCE OF POWER OF ATTORNEY

This is in response to the Power of Attorney filed 12/20/2021.

The Power of Attorney in this application is accepted. Correspondence in this application will be mailed to the above address as provided by 37 CFR 1.33.

Questions about the contents of this notice and the requirements it sets forth should be directed to the Office of Data Management, Application Assistance Unit, at **(571) 272-4000** or **(571) 272-4200** or **1-888-786-0101**.

/qtran/

PTO/SB/22 (10-20)
Approved for use through 11/30/2020. OMB 0651-0031
U.S. Patent and Trademark Office; U.S. DEPARTMENT OF COMMERCE
Under the Paperwork Reduction Act of 1995, no persons are required to respond to a collection of information unless it displays a valid OMB control number.

PETITION FOR EXTENSION OF TIME UNDER 37 CFR 1.136(a)	Docket Number (Optional) RALEP025C1C1C1C1
Application Number 16/907,887	Filed JUNE 22,2020
For Security Techniques for Device Assisted Services	
Art Unit 2434	Examiner Kaplan, Benjamin

This is a request under the provisions of 37 CFR 1.136(a) to extend the period for filing a reply in the above-identified application.

The requested extension and fee are as follows (check time period desired and enter the appropriate fee below):

		Fee	Small Entity Fee	Micro Entity Fee	
☐	One month (37 CFR 1.17(a)(1))	$220	$110	$55	$
☐	Two months (37 CFR 1.17(a)(2))	$640	$320	$160	$
☑	Three months (37 CFR 1.17(a)(3))	$1,480	$740	$370	$ 740
☐	Four months (37 CFR 1.17(a)(4))	$2,320	$1,160	$580	$
☐	Five months (37 CFR 1.17(a)(5))	$3,160	$1,580	$790	$

☐ Applicant asserts small entity status. See 37 CFR 1.27.

☐ Applicant certifies micro entity status. See 37 CFR 1.29.
Form PTO/SB/15A or B or equivalent must either be enclosed or have been submitted previously.

☐ A check in the amount of the fee is enclosed.

☐ Payment by credit card. Form PTO-2038 is attached.

☐ The Director has already been authorized to charge fees in this application to a Deposit Account.

☑ The Director is hereby authorized to charge any fees which may be required, or credit any overpayment, to Deposit Account Number 505876.

☐ Payment made via EFS-Web.

WARNING: Information on this form may become public. Credit card information should not be included on this form. Provide credit card information and authorization on PTO-2038.

I am the

☐ applicant/inventor.

☐ assignee of record of the entire interest. See 37 CFR 3.71. 37 CFR 3.73(b) statement is enclosed (Form PTO/SB/96).

☑ attorney or agent of record. Registration number 40013.

☐ attorney or agent acting under 37 CFR 1.34. Registration number _____.

/James E. Harris/	December 20, 2021
Signature	Date
James E. Harris	903-201-6212
Typed or printed name	Telephone Number

NOTE: This form must be signed in accordance with 37 CFR 1.33. See 37 CFR 1.4 for signature requirements and certifications. Submit multiple forms if more than one signature is required, see below*.

☐ * Total of _____ forms are submitted.

This collection of information is required by 37 CFR 1.136(a). The information is required to obtain or retain a benefit by the public, which is to file (and by the USPTO to process) an application. Confidentiality is governed by 35 U.S.C. 122 and 37 CFR 1.11 and 1.14. This collection is estimated to take 6 minutes to complete, including gathering, preparing, and submitting the completed application form to the USPTO. Time will vary depending upon the individual case. Any comments on the amount of time you require to complete this form and/or suggestions for reducing this burden should be sent to the Chief Information Officer, U.S. Patent and Trademark Office, U.S. Department of Commerce, P.O. Box 1450, Alexandria, VA 22313-1450. DO NOT SEND FEES OR COMPLETED FORMS TO THIS ADDRESS. **SEND TO: Commissioner for Patents, P.O. Box 1450, Alexandria, VA 22313-1450.**
If you need assistance in completing the form, call 1-800-PTO-9199 and select option 2.

Privacy Act Statement

The **Privacy Act of 1974 (P.L. 93-579)** requires that you be given certain information in connection with your submission of the attached form related to a patent application or patent. Accordingly, pursuant to the requirements of the Act, please be advised that: (1) the general authority for the collection of this information is 35 U.S.C. 2(b)(2); (2) furnishing of the information solicited is voluntary; and (3) the principal purpose for which the information is used by the U.S. Patent and Trademark Office is to process and/or examine your submission related to a patent application or patent. If you do not furnish the requested information, the U.S. Patent and Trademark Office may not be able to process and/or examine your submission, which may result in termination of proceedings or abandonment of the application or expiration of the patent.

The information provided by you in this form will be subject to the following routine uses:

1. The information on this form will be treated confidentially to the extent allowed under the Freedom of Information Act (5 U.S.C. 552) and the Privacy Act (5 U.S.C 552a). Records from this system of records may be disclosed to the Department of Justice to determine whether disclosure of these records is required by the Freedom of Information Act.
2. A record from this system of records may be disclosed, as a routine use, in the course of presenting evidence to a court, magistrate, or administrative tribunal, including disclosures to opposing counsel in the course of settlement negotiations.
3. A record in this system of records may be disclosed, as a routine use, to a Member of Congress submitting a request involving an individual, to whom the record pertains, when the individual has requested assistance from the Member with respect to the subject matter of the record.
4. A record in this system of records may be disclosed, as a routine use, to a contractor of the Agency having need for the information in order to perform a contract. Recipients of information shall be required to comply with the requirements of the Privacy Act of 1974, as amended, pursuant to 5 U.S.C. 552a(m).
5. A record related to an International Application filed under the Patent Cooperation Treaty in this system of records may be disclosed, as a routine use, to the International Bureau of the World Intellectual Property Organization, pursuant to the Patent Cooperation Treaty.
6. A record in this system of records may be disclosed, as a routine use, to another federal agency for purposes of National Security review (35 U.S.C. 181) and for review pursuant to the Atomic Energy Act (42 U.S.C. 218(c)).
7. A record from this system of records may be disclosed, as a routine use, to the Administrator, General Services, or his/her designee, during an inspection of records conducted by GSA as part of that agency's responsibility to recommend improvements in records management practices and programs, under authority of 44 U.S.C. 2904 and 2906. Such disclosure shall be made in accordance with the GSA regulations governing inspection of records for this purpose, and any other relevant (*i.e.*, GSA or Commerce) directive. Such disclosure shall not be used to make determinations about individuals.
8. A record from this system of records may be disclosed, as a routine use, to the public after either publication of the application pursuant to 35 U.S.C. 122(b) or issuance of a patent pursuant to 35 U.S.C. 151. Further, a record may be disclosed, subject to the limitations of 37 CFR 1.14, as a routine use, to the public if the record was filed in an application which became abandoned or in which the proceedings were terminated and which application is referenced by either a published application, an application open to public inspection or an issued patent.
9. A record from this system of records may be disclosed, as a routine use, to a Federal, State, or local law enforcement agency, if the USPTO becomes aware of a violation or potential violation of law or regulation.

PTO/SB/08a (02-18)
Approved for use through 11/30/2020. OMB 0651-0031
U.S. Patent and Trademark Office; U.S. DEPARTMENT OF COMMERCE
Under the Paperwork Reduction Act of 1995, no persons are required to respond to a collection of information unless it contains a valid OMB control number.

INFORMATION DISCLOSURE STATEMENT BY APPLICANT

(Not for submission under 37 CFR 1.99)

Application Number	16907887
Filing Date	2020-06-22
First Named Inventor	RALEIGH, GREGORY
Art Unit	2434
Examiner Name	KAPLAN, BENJAMIN
Attorney Docket Number	RALEP025C1C1C1C1

U.S.PATENTS Remove

Examiner Initial*	Cite No	Patent Number	Kind Code[1]	Issue Date	Name of Patentee or Applicant of cited Document	Pages,Columns,Lines where Relevant Passages or Relevant Figures Appear
	1	10021251	B2	2018-07-10	Aaron et al.	
	2	8630630	B2	2014-01-14	Raleigh	
	3	9204282	B2	2015-12-01	Raleigh	

If you wish to add additional U.S. Patent citation information please click the Add button. Add

U.S.PATENT APPLICATION PUBLICATIONS Remove

Examiner Initial*	Cite No	Publication Number	Kind Code[1]	Publication Date	Name of Patentee or Applicant of cited Document	Pages,Columns,Lines where Relevant Passages or Relevant Figures Appear
	1	20080120174	A1	2008-05-22	Li	
	2	20120011017	A1	2012-01-12	Wolcott et al.	

If you wish to add additional U.S. Published Application citation information please click the Add button. Add

FOREIGN PATENT DOCUMENTS Remove

Examiner Initial*	Cite No	Foreign Document Number[3]	Country Code[2] i	Kind Code[4]	Publication Date	Name of Patentee or Applicant of cited Document	Pages,Columns,Lines where Relevant Passages or Relevant Figures Appear	T[5]

INFORMATION DISCLOSURE STATEMENT BY APPLICANT (Not for submission under 37 CFR 1.99)	Application Number	16907887
	Filing Date	2020-06-22
	First Named Inventor	RALEIGH, GREGORY
	Art Unit	2434
	Examiner Name	KAPLAN, BENJAMIN
	Attorney Docket Number	RALEP025C1C1C1C1

	1							

If you wish to add additional Foreign Patent Document citation information please click the Add button Add

NON-PATENT LITERATURE DOCUMENTS Remove

Examiner Initials*	Cite No	Include name of the author (in CAPITAL LETTERS), title of the article (when appropriate), title of the item (book, magazine, journal, serial, symposium, catalog, etc), date, pages(s), volume-issue number(s), publisher, city and/or country where published.	T[5]
	1		

If you wish to add additional non-patent literature document citation information please click the Add button Add

EXAMINER SIGNATURE

Examiner Signature		Date Considered	

*EXAMINER: Initial if reference considered, whether or not citation is in conformance with MPEP 609. Draw line through a citation if not in conformance and not considered. Include copy of this form with next communication to applicant.

[1] See Kind Codes of USPTO Patent Documents at www.USPTO.GOV or MPEP 901.04. [2] Enter office that issued the document, by the two-letter code (WIPO Standard ST.3). [3] For Japanese patent documents, the indication of the year of the reign of the Emperor must precede the serial number of the patent document. [4] Kind of document by the appropriate symbols as indicated on the document under WIPO Standard ST.16 if possible. [5] Applicant is to place a check mark here if English language translation is attached.

INFORMATION DISCLOSURE STATEMENT BY APPLICANT (Not for submission under 37 CFR 1.99)	Application Number	16907887
	Filing Date	2020-06-22
	First Named Inventor	RALEIGH, GREGORY
	Art Unit	2434
	Examiner Name	KAPLAN, BENJAMIN
	Attorney Docket Number	RALEP025C1C1C1C1

CERTIFICATION STATEMENT

Please see 37 CFR 1.97 and 1.98 to make the appropriate selection(s):

That each item of information contained in the information disclosure statement was first cited in any communication from a foreign patent office in a counterpart foreign application not more than three months prior to the filing of the information disclosure statement. See 37 CFR 1.97(e)(1).

OR

☐ That no item of information contained in the information disclosure statement was cited in a communication from a foreign patent office in a counterpart foreign application, and, to the knowledge of the person signing the certification after making reasonable inquiry, no item of information contained in the information disclosure statement was known to any individual designated in 37 CFR 1.56(c) more than three months prior to the filing of the information disclosure statement. See 37 CFR 1.97(e)(2).

See attached certification statement.

☒ The fee set forth in 37 CFR 1.17 (p) has been submitted herewith.

☒ A certification statement is not submitted herewith.

SIGNATURE

A signature of the applicant or representative is required in accordance with CFR 1.33, 10.18. Please see CFR 1.4(d) for the form of the signature.

Signature	/James E. Harris/	Date (YYYY-MM-DD)	2021-12-20
Name/Print	James E. Harris	Registration Number	40013

This collection of information is required by 37 CFR 1.97 and 1.98. The information is required to obtain or retain a benefit by the public which is to file (and by the USPTO to process) an application. Confidentiality is governed by 35 U.S.C. 122 and 37 CFR 1.14. This collection is estimated to take 1 hour to complete, including gathering, preparing and submitting the completed application form to the USPTO. Time will vary depending upon the individual case. Any comments on the amount of time you require to complete this form and/or suggestions for reducing this burden, should be sent to the Chief Information Officer, U.S. Patent and Trademark Office, U.S. Department of Commerce, P.O. Box 1450, Alexandria, VA 22313-1450. DO NOT SEND FEES OR COMPLETED FORMS TO THIS ADDRESS. **SEND TO: Commissioner for Patents, P.O. Box 1450, Alexandria, VA 22313-1450.**

Privacy Act Statement

The Privacy Act of 1974 (P.L. 93-579) requires that you be given certain information in connection with your submission of the attached form related to a patent application or patent. Accordingly, pursuant to the requirements of the Act, please be advised that: (1) the general authority for the collection of this information is 35 U.S.C. 2(b)(2); (2) furnishing of the information solicited is voluntary; and (3) the principal purpose for which the information is used by the U.S. Patent and Trademark Office is to process and/or examine your submission related to a patent application or patent. If you do not furnish the requested information, the U.S. Patent and Trademark Office may not be able to process and/or examine your submission, which may result in termination of proceedings or abandonment of the application or expiration of the patent.

The information provided by you in this form will be subject to the following routine uses:

1. The information on this form will be treated confidentially to the extent allowed under the Freedom of Information Act (5 U.S.C. 552) and the Privacy Act (5 U.S.C. 552a). Records from this system of records may be disclosed to the Department of Justice to determine whether the Freedom of Information Act requires disclosure of these record s.

2. A record from this system of records may be disclosed, as a routine use, in the course of presenting evidence to a court, magistrate, or administrative tribunal, including disclosures to opposing counsel in the course of settlement negotiations.

3. A record in this system of records may be disclosed, as a routine use, to a Member of Congress submitting a request involving an individual, to whom the record pertains, when the individual has requested assistance from the Member with respect to the subject matter of the record.

4. A record in this system of records may be disclosed, as a routine use, to a contractor of the Agency having need for the information in order to perform a contract. Recipients of information shall be required to comply with the requirements of the Privacy Act of 1974, as amended, pursuant to 5 U.S.C. 552a(m).

5. A record related to an International Application filed under the Patent Cooperation Treaty in this system of records may be disclosed, as a routine use, to the International Bureau of the World Intellectual Property Organization, pursuant to the Patent Cooperation Treaty.

6. A record in this system of records may be disclosed, as a routine use, to another federal agency for purposes of National Security review (35 U.S.C. 181) and for review pursuant to the Atomic Energy Act (42 U.S.C. 218(c)).

7. A record from this system of records may be disclosed, as a routine use, to the Administrator, General Services, or his/her designee, during an inspection of records conducted by GSA as part of that agency's responsibility to recommend improvements in records management practices and programs, under authority of 44 U.S.C. 2904 and 2906. Such disclosure shall be made in accordance with the GSA regulations governing inspection of records for this purpose, and any other relevant (i.e., GSA or Commerce) directive. Such disclosure shall not be used to make determinations about individuals.

8. A record from this system of records may be disclosed, as a routine use, to the public after either publication of the application pursuant to 35 U.S.C. 122(b) or issuance of a patent pursuant to 35 U.S.C. 151. Further, a record may be disclosed, subject to the limitations of 37 CFR 1.14, as a routine use, to the public if the record was filed in an application which became abandoned or in which the proceedings were terminated and which application is referenced by either a published application, an application open to public inspections or an issued patent.

9. A record from this system of records may be disclosed, as a routine use, to a Federal, State, or local law enforcement agency, if the USPTO becomes aware of a violation or potential violation of law or regulation.

Electronic Patent Application Fee Transmittal

Application Number:	16907887
Filing Date:	22-Jun-2020
Title of Invention:	Security Techniques for Device Assisted Services
First Named Inventor/Applicant Name:	Gregory G. Raleigh
Filer:	James E. Harris/Jennifer Smith
Attorney Docket Number:	RALEP025C1C1C1C1

Filed as Small Entity

Filing Fees for Utility under 35 USC 111(a)

Description	Fee Code	Quantity	Amount	Sub-Total in USD($)
Basic Filing:				
Pages:				
Claims:				
Miscellaneous-Filing:				
Petition:				
Patent-Appeals-and-Interference:				
Post-Allowance-and-Post-Issuance:				
Extension-of-Time:				

Description	Fee Code	Quantity	Amount	Sub-Total in USD($)
Extension - 3 months with $0 paid	2253	1	740	740
Miscellaneous:				
SUBMISSION- INFORMATION DISCLOSURE STMT	2806	1	130	130
		Total in USD ($)		**870**

Electronic Acknowledgement Receipt	
EFS ID:	44579308
Application Number:	16907887
International Application Number:	
Confirmation Number:	2653
Title of Invention:	Security Techniques for Device Assisted Services
First Named Inventor/Applicant Name:	Gregory G. Raleigh
Customer Number:	106963
Filer:	James E. Harris/Jennifer Smith
Filer Authorized By:	James E. Harris
Attorney Docket Number:	RALEP025C1C1C1C1
Receipt Date:	21-DEC-2021
Filing Date:	22-JUN-2020
Time Stamp:	16:56:53
Application Type:	Utility under 35 USC 111(a)

Payment information:

Submitted with Payment	yes
Payment Type	DA
Payment was successfully received in RAM	$870
RAM confirmation Number	E2021BKG57260188
Deposit Account	505876
Authorized User	Jennifer Smith
The Director of the USPTO is hereby authorized to charge indicated fees and credit any overpayment as follows: 37 CFR 1.21 (Miscellaneous fees and charges)	

File Listing:

Document Number	Document Description	File Name	File Size(Bytes)/ Message Digest	Multi Part /.zip	Pages (if appl.)
1	Amendment/Req. Reconsideration-After Non-Final Reject	OAR.pdf	105837 8daaf914a73e7e7928b0c96967691a7da67652c8	no	5
Warnings:					
Information:					
2	Extension of Time	EOT.pdf	199657 d4afdd1ef56abe6bef4273558a0a5c5bf5d7638a	no	2
Warnings:					
Information:					
3	Information Disclosure Statement (IDS) Form (SB08)	IDS.pdf	1053279 6c23fc3ec304e490e21b896ac310e868d58c9eac	no	4
Warnings:					
Information:					
4	Fee Worksheet (SB06)	fee-info.pdf	40961 b1ecea4382d8ce69b40c7489b9c914e42c6a50c9	no	2
Warnings:					
Information:					
			Total Files Size (in bytes):	1399734	

This Acknowledgement Receipt evidences receipt on the noted date by the USPTO of the indicated documents, characterized by the applicant, and including page counts, where applicable. It serves as evidence of receipt similar to a Post Card, as described in MPEP 503.

New Applications Under 35 U.S.C. 111
If a new application is being filed and the application includes the necessary components for a filing date (see 37 CFR 1.53(b)-(d) and MPEP 506), a Filing Receipt (37 CFR 1.54) will be issued in due course and the date shown on this Acknowledgement Receipt will establish the filing date of the application.
National Stage of an International Application under 35 U.S.C. 371
If a timely submission to enter the national stage of an international application is compliant with the conditions of 35 U.S.C. 371 and other applicable requirements a Form PCT/DO/EO/903 indicating acceptance of the application as a national stage submission under 35 U.S.C. 371 will be issued in addition to the Filing Receipt, in due course.
New International Application Filed with the USPTO as a Receiving Office
If a new international application is being filed and the international application includes the necessary components for an international filing date (see PCT Article 11 and MPEP 1810), a Notification of the International Application Number and of the International Filing Date (Form PCT/RO/105) will be issued in due course, subject to prescriptions concerning national security, and the date shown on this Acknowledgement Receipt will establish the international filing date of the application.

IN THE UNITED STATES PATENT AND TRADEMARK OFFICE

In re Application of:	Raleigh	Examiner:	Kaplan, Benjamin
Serial No.:	16/907,887	Art Unit:	2434
Filed:	June 22, 2020	Conf. No.:	2653
Title:	Security Techniques for Device Assisted Services		

Mail Stop Office Action
Commissioner for Patents
P.O. Box 1450
Alexandria, VA 22313-1450

RESPONSE TO OFFICE ACTION

In response to the Office Action dated June 24, 2021, the no-fee deadline for response being September 24, 2021, please enter the following amendments and remarks:

A Listing of the Claims begins on page 2.

Remarks begin on page 4.

AMENDMENTS TO THE CLAIMS

2. (Previously Presented) A method of operating a wireless end-user device, the method comprising:

connecting from a secure modem subsystem to a wireless cellular network;

connecting a first secure control channel from the secure modem subsystem through the wireless cellular network to a network service controller;

connecting a second secure control channel from a secure execution environment, separately secure from the secure modem subsystem, through the secure modem subsystem and the wireless cellular network to the network service controller;

receiving at the secure execution environment via the second control channel one or more messages from the network service controller, the one or more messages comprising one or more service policy settings;

storing the one or more service policy settings in a secure memory partition accessible only from the secure execution environment; and

enforcing, at least in part from the secure execution environment, a network service profile comprising the one or more service policy settings, to control the wireless end-user device use of a service on the wireless cellular network.

3. (Previously Presented) The method of claim 2, wherein the network service profile is associated with a service plan that provides for access to the service on the wireless network

4. (Previously Presented) The method of claim 2, wherein the secure modem subsystem comprises a modem control link and a modem local channel, and the first secure control channel connects the modem control link to the network service controller through the modem local channel, and wherein the secure execution environment comprises a host service control link, the second secure control channel coupled to the host service control link, the modem local channel providing secure communication between the modem control link and the host service control link.

5. (Previously Presented) The method of claim 2, wherein the secure modem subsystem further comprises a modem agent accessible only by the network service controller through the first control channel.

6. (Previously Presented) The method of claim 5, wherein the modem agent comprises a service measurement point for use of the service.

7. (Previously Presented) The method of claim 6, further comprising the modem agent communicating a report of the use of the service to the network service controller through the first control channel.

8. (Previously Presented) The method of claim 7, further comprising the secure execution environment separately communicating a report of the monitored use of the service through the second control channel.

9. (Previously Presented) The method of claim 2, wherein the one or more service policy settings include an access control setting, a traffic control setting, and/or an admission control setting.

10. (Previously Presented) The method of claim 2, wherein the one or more service policy settings include a network or device management communication setting.

11. (Previously Presented) The method of claim 2, wherein the secure execution environment is implemented at least in part as a hardware partition.

12. (Previously Presented) The method of claim 2, wherein the secure execution environment is implemented at least in part as a software partition.

13. (Previously Presented) The method of claim 2, wherein the secure execution environment is implemented at least in part in a virtual machine executed on a processor.

REMARKS

Claims 2-13 are pending in the application and were rejected. In view of the following remarks, Applicant respectfully requests reconsideration.

Nonstatutory Double Patenting

Claims 2-13 were rejected on the grounds of nonstatutory double patenting as being unpatentable over claims 1-12 of U.S. Patent No. 10,694,385 B2. The present application and the '385 patent are owned in common. Applicant submits herewith a terminal disclaimer with respect to the '385 patent, and submits that such renders the present claims in condition for allowance.

The Commissioner is authorized to charge any fee deficiency or credit any overpayment to Deposit Account 50-5876.

Respectfully submitted,

Date: December 20, 2021

By: /James E. Harris/

James E. Harris
Reg. No. 40,013
Patent Counsel
Headwater Research LLC
110 N. College Ave., Suite 1116
Tyler, Texas 75702
(903) 201-6212

CERTIFICATE OF ELECTRONIC TRANSMISSION

I hereby certify that this paper (along with any paper referred to as being attached or enclosed) is being filed electronically via EFS-Web addressed to the Commissioner for Patents on:

Date: December 21, 2021 By: /Jennifer Smith /
Jennifer Smith

Doc Code: DIST.E.FILE Document Description: Electronic Terminal Disclaimer - Filed	PTO/SB/26 U.S. Patent and Trademark Office Department of Commerce

Electronic Petition Request	**TERMINAL DISCLAIMER TO OBVIATE A DOUBLE PATENTING REJECTION OVER A "PRIOR" PATENT**
Application Number	16907887
Filing Date	22-Jun-2020
First Named Inventor	Gregory Raleigh
Attorney Docket Number	RALEP025C1C1C1C1
Title of Invention	Security Techniques for Device Assisted Services

☒ Filing of terminal disclaimer does not obviate requirement for response under 37 CFR 1.111 to outstanding Office Action

☒ This electronic Terminal Disclaimer is not being used for a Joint Research Agreement.

Owner	Percent Interest
Headwater Research LLC	100%

The owner(s) with percent interest listed above in the instant application hereby disclaims, except as provided below, the terminal part of the statutory term of any patent granted on the instant application which would extend beyond the expiration date of the full statutory term of prior patent number(s)

10694385

as the term of said prior patent is presently shortened by any terminal disclaimer. The owner hereby agrees that any patent so granted on the instant application shall be enforceable only for and during such period that it and the prior patent are commonly owned. This agreement runs with any patent granted on the instant application and is binding upon the grantee, its successors or assigns.

In making the above disclaimer, the owner does not disclaim the terminal part of the term of any patent granted on the instant application that would extend to the expiration date of the full statutory term of the prior patent, "as the term of said prior patent is presently shortened by any terminal disclaimer," in the event that said prior patent later:
- expires for failure to pay a maintenance fee;
- is held unenforceable;
- is found invalid by a court of competent jurisdiction;
- is statutorily disclaimed in whole or terminally disclaimed under 37 CFR 1.321;
- has all claims canceled by a reexamination certificate;
- is reissued; or
- is in any manner terminated prior to the expiration of its full statutory term as presently shortened by any terminal disclaimer.

◉ Terminal disclaimer fee under 37 CFR 1.20(d) is included with Electronic Terminal Disclaimer request.

○	I certify, in accordance with 37 CFR 1.4(d)(4), that the terminal disclaimer fee under 37 CFR 1.20(d) required for this terminal disclaimer has already been paid in the above-identified application.

Applicant claims the following fee status:

◉ Small Entity

○ Micro Entity

○ Regular Undiscounted

I hereby declare that all statements made herein of my own knowledge are true and that all statements made on information and belief are believed to be true; and further that these statements were made with the knowledge that willful false statements and the like so made are punishable by fine or imprisonment, or both, under Section 1001 of Title 18 of the United States Code and that such willful false statements may jeopardize the validity of the application or any patent issued thereon.

THIS PORTION MUST BE COMPLETED BY THE SIGNATORY OR SIGNATORIES

I certify, in accordance with 37 CFR 1.4(d)(4) that I am:

◉ An attorney or agent registered to practice before the Patent and Trademark Office who is of record in this application

Registration Number 40013

○ A sole inventor

○ A joint inventor; I certify that I am authorized to sign this submission on behalf of all of the inventors as evidenced by the power of attorney in the application

○ A joint inventor; all of whom are signing this request

Signature	/James E. Harris/
Name	James E. Harris

*Statement under 37 CFR 3.73(b) is required if terminal disclaimer is signed by the assignee (owner).
Form PTO/SB/96 may be used for making this certification. See MPEP § 324.

Electronic Patent Application Fee Transmittal

Application Number:	16907887
Filing Date:	22-Jun-2020
Title of Invention:	Security Techniques for Device Assisted Services
First Named Inventor/Applicant Name:	Gregory G. Raleigh
Filer:	James E. Harris/Jennifer Smith
Attorney Docket Number:	RALEP025C1C1C1C1

Filed as Small Entity

Filing Fees for Utility under 35 USC 111(a)

Description	Fee Code	Quantity	Amount	Sub-Total in USD($)
Basic Filing:				
STATUTORY OR TERMINAL DISCLAIMER	2814	1	170	170
Pages:				
Claims:				
Miscellaneous-Filing:				
Petition:				
Patent-Appeals-and-Interference:				
Post-Allowance-and-Post-Issuance:				

Description	Fee Code	Quantity	Amount	Sub-Total in USD($)
Extension-of-Time:				
Miscellaneous:				
		Total in USD ($)		**170**

Doc Code: DISQ.E.FILE
Document Description: Electronic Terminal Disclaimer – Approved

Application No.: 16907887

Filing Date: 22-Jun-2020

Applicant/Patent under Reexamination: Raleigh

Electronic Terminal Disclaimer filed on December 21, 2021

☒ APPROVED

This patent is subject to a terminal disclaimer

☐ DISAPPROVED

Approved/Disapproved by: Electronic Terminal Disclaimer automatically approved by EFS-Web

U.S. Patent and Trademark Office

Electronic Acknowledgement Receipt

EFS ID:	44579207
Application Number:	16907887
International Application Number:	
Confirmation Number:	2653
Title of Invention:	Security Techniques for Device Assisted Services
First Named Inventor/Applicant Name:	Gregory G. Raleigh
Customer Number:	106963
Filer:	James E. Harris/Jennifer Smith
Filer Authorized By:	James E. Harris
Attorney Docket Number:	RALEP025C1C1C1C1
Receipt Date:	21-DEC-2021
Filing Date:	22-JUN-2020
Time Stamp:	16:54:39
Application Type:	Utility under 35 USC 111(a)

Payment information:

Submitted with Payment	yes
Payment Type	DA
Payment was successfully received in RAM	$170
RAM confirmation Number	E2021BKG54340080
Deposit Account	505876
Authorized User	Jennifer Smith
The Director of the USPTO is hereby authorized to charge indicated fees and credit any overpayment as follows: 37 CFR 1.21 (Miscellaneous fees and charges)	

File Listing:

Document Number	Document Description	File Name	File Size(Bytes)/ Message Digest	Multi Part /.zip	Pages (if appl.)
1	Terminal Disclaimer-Filed (Electronic)	eTerminal-Disclaimer.pdf	41134 00e9f496286dcb314fb2cb29a5f9fd2009124771	no	2
Warnings:					
Information:					
2	Fee Worksheet (SB06)	fee-info.pdf	38025 d359d63df08b9d8ce1a0b91bd07d361e011c73a8	no	2
Warnings:					
Information:					
			Total Files Size (in bytes):	79159	

This Acknowledgement Receipt evidences receipt on the noted date by the USPTO of the indicated documents, characterized by the applicant, and including page counts, where applicable. It serves as evidence of receipt similar to a Post Card, as described in MPEP 503.

New Applications Under 35 U.S.C. 111
If a new application is being filed and the application includes the necessary components for a filing date (see 37 CFR 1.53(b)-(d) and MPEP 506), a Filing Receipt (37 CFR 1.54) will be issued in due course and the date shown on this Acknowledgement Receipt will establish the filing date of the application.
National Stage of an International Application under 35 U.S.C. 371
If a timely submission to enter the national stage of an international application is compliant with the conditions of 35 U.S.C. 371 and other applicable requirements a Form PCT/DO/EO/903 indicating acceptance of the application as a national stage submission under 35 U.S.C. 371 will be issued in addition to the Filing Receipt, in due course.
New International Application Filed with the USPTO as a Receiving Office
If a new international application is being filed and the international application includes the necessary components for an international filing date (see PCT Article 11 and MPEP 1810), a Notification of the International Application Number and of the International Filing Date (Form PCT/RO/105) will be issued in due course, subject to prescriptions concerning national security, and the date shown on this Acknowledgement Receipt will establish the international filing date of the application.

PTO/SB/06 (09-11)
Approved for use through 1/31/2014. OMB 0651-0032
U.S. Patent and Trademark Office; U.S. DEPARTMENT OF COMMERCE
Under the Paperwork Reduction Act of 1995, no persons are required to respond to a collection of information unless it displays a valid OMB control number.

PATENT APPLICATION FEE DETERMINATION RECORD Substitute for Form PTO-875	Application or Docket Number 16/907,887	Filing Date 06/22/2020	☐ To be Mailed

ENTITY: ☐ LARGE ☑ SMALL ☐ MICRO

APPLICATION AS FILED - PART I

FOR	(Column 1) NUMBER FILED	(Column 2) NUMBER EXTRA		RATE ($)	FEE ($)
☐ BASIC FEE (37 CFR 1.16(a), (b), or (c))	N/A	N/A		N/A	
☐ SEARCH FEE (37 CFR 1.16(k), (i), or (m))	N/A	N/A		N/A	
☐ EXAMINATION FEE (37 CFR 1.16(o), (p), or (q))	N/A	N/A		N/A	
TOTAL CLAIMS (37 CFR 1.16(i))	minus 20 =	*		x $50 =	
INDEPENDENT CLAIMS (37 CFR 1.16(h))	minus 3 =	*		x $230 =	
☐ APPLICATION SIZE FEE (37 CFR 1.16(s))	If the specification and drawings exceed 100 sheets of paper, the application size fee due is $310 ($155 for small entity) for each additional 50 sheets or fraction thereof. See 35 U.S.C. 41(a)(1)(G) and 37 CFR 1.16(s).				
☐ MULTIPLE DEPENDENT CLAIM PRESENT (37 CFR 1.16(j))					
* If the difference in column 1 is less than zero, enter "0" in column 2.				TOTAL	

APPLICATION AS AMENDED - PART II

AMENDMENT	12/21/2021	(Column 1) CLAIMS REMAINING AFTER AMENDMENT		(Column 2) HIGHEST NUMBER PREVIOUSLY PAID FOR	(Column 3) PRESENT EXTRA		RATE ($)	ADDITIONAL FEE ($)
	Total (37 CFR 1.16(i))	* 12	Minus	** 20	= 0		x $50 =	0
	Independent (37 CFR 1.16(h))	* 1	Minus	*** 3	= 0		x $240 =	0
	☐ Application Size Fee (37 CFR 1.16(s))							
	☐ FIRST PRESENTATION OF MULTIPLE DEPENDENT CLAIM (37 CFR 1.16(j))							
							TOTAL ADD'L FEE	0

AMENDMENT		(Column 1) CLAIMS REMAINING AFTER AMENDMENT		(Column 2) HIGHEST NUMBER PREVIOUSLY PAID FOR	(Column 3) PRESENT EXTRA		RATE ($)	ADDITIONAL FEE ($)
	Total (37 CFR 1.16(i))	*	Minus	**	=		x $0 =	
	Independent (37 CFR 1.16(h))	*	Minus	***	=		x $0 =	
	☐ Application Size Fee (37 CFR 1.16(s))							
	☐ FIRST PRESENTATION OF MULTIPLE DEPENDENT CLAIM (37 CFR 1.16(j))							
							TOTAL ADD'L FEE	

* If the entry in column 1 is less than the entry in column 2, write "0" in column 3.	SLIE
** If the "Highest Number Previously Paid For" IN THIS SPACE is less than 20, enter "20".	/NICOL D SCOTT/
*** If the "Highest Number Previously Paid For" IN THIS SPACE is less than 3, enter "3".	
The "Highest Number Previously Paid For" (Total or Independent) is the highest number found in the appropriate box in column 1.	

This collection of information is required by 37 CFR 1.16. The information is required to obtain or retain a benefit by the public which is to file (and by the USPTO to process) an application. Confidentiality is governed by 35 U.S.C. 122 and 37 CFR 1.14. This collection is estimated to take 12 minutes to complete, including gathering, preparing, and submitting the completed application form to the USPTO. Time will vary depending upon the individual case. Any comments on the amount of time you require to complete this form and/or suggestions for reducing this burden, should be sent to the Chief Information Officer, U.S. Patent and Trademark Office, U.S. Department of Commerce, P.O. Box 1450, Alexandria, VA 22313-1450. DO NOT SEND FEES OR COMPLETED FORMS TO THIS ADDRESS. **SEND TO: Commissioner for Patents, P.O. Box 1450, Alexandria, VA 22313-1450.**

If you need assistance in completing the form, call 1-800-PTO-9199 and select option 2.

PTO/AIA/80 (07-17)
Approved for use through 01/31/2018. OMB 0651-0035
U.S. Patent and Trademark Office; U.S. DEPARTMENT OF COMMERCE
Under the Paperwork Reduction Act of 1995, no person is required to respond to a collection of information unless it displays a valid OMB control number

POWER OF ATTORNEY TO PROSECUTE APPLICATIONS BEFORE THE USPTO

I hereby revoke all previous powers of attorney given in the application identified in the attached statement under 37 CFR 3.73(c).

I hereby appoint:

[X] Practitioners associated with Customer Number: 106963

OR

[ ] Practitioner(s) named below (if more than ten patent practitioners are to be named, then a customer number must be used):

Name	Registration Number	Name	Registration Number

As attorney(s) or agent(s) to represent the undersigned before the United States Patent and Trademark Office (USPTO) in connection with any and all patent applications assigned only to the undersigned according to the USPTO assignment records or assignment documents attached to this form in accordance with 37 CFR 3.73(c).

Please change the correspondence address for the application identified in the attached statement under 37 CFR 3.73(c) to:

[X] The address associated with Customer Number: 106963

OR

[ ]

Firm or individual name		
Address		
City	State	Zip
Country		
Telephone	Email	

Assignee name and address: Headwater Research LLC
1011 Pruitt Place
Tyler, TX 75703 (USA)

A copy of this form, together with a statement under 37 CFR 3.73(c) (Form PTO/AIA/96 or equivalent) is required to be filed in each application in which this form is used. The statement under 37 CFR 3.73(c) may be completed by one of the practitioners appointed in this form, and must identify the application in which this Power of Attorney is to be filed.

SIGNATURE of Assignee of Record

The individual whose signature and title is supplied below is authorized to act on behalf of the assignee.

Signature	Date January 17, 2018
Name James E. Harris	Telephone 903-201-6212
Title CEO	

This collection of information is required by 37 CFR 1.31, 1.32, and 1.33. The information is required to obtain or retain a benefit by the public, which is to update (and by the USPTO to process) the file of a patent or reexamination proceeding. Confidentiality is governed by 35 U.S.C. 122 and 37 CFR 1.11 and 1.14. This collection is estimated to take 18 minutes to complete, including gathering, preparing, and submitting the completed application form to the USPTO. Time will vary depending upon the individual case. Any comments on the amount of time you require to complete this form and/or suggestions for reducing this burden, should be sent to the Chief Information Officer, U.S. Patent and Trademark Office, U.S. Department of Commerce, P.O. Box 1450, Alexandria, VA 22313-1450. DO NOT SEND FEES OR COMPLETED FORMS TO THIS ADDRESS. SEND TO: **Commissioner for Patents, P.O. Box 1450, Alexandria, VA 22313-1450.**
If you need assistance in completing the form, call 1-800-PTO-9199 and select option 2.

Electronic Acknowledgement Receipt

EFS ID:	44559522
Application Number:	16907887
International Application Number:	
Confirmation Number:	2653
Title of Invention:	Security Techniques for Device Assisted Services
First Named Inventor/Applicant Name:	Gregory G. Raleigh
Customer Number:	106963
Filer:	James E. Harris/Jennifer Smith
Filer Authorized By:	James E. Harris
Attorney Docket Number:	RALEP025C1C1C1C1
Receipt Date:	20-DEC-2021
Filing Date:	22-JUN-2020
Time Stamp:	12:08:28
Application Type:	Utility under 35 USC 111(a)

Payment information:

Submitted with Payment	no

File Listing:

Document Number	Document Description	File Name	File Size(Bytes)/ Message Digest	Multi Part /.zip	Pages (if appl.)
1	Power of Attorney	P025_POA.pdf	52893 dae6fc7e916c78053de2db8ad0e9dd9826cac38d	no	1

Warnings:

Information:	
Total Files Size (in bytes):	52893

This Acknowledgement Receipt evidences receipt on the noted date by the USPTO of the indicated documents, characterized by the applicant, and including page counts, where applicable. It serves as evidence of receipt similar to a Post Card, as described in MPEP 503.

New Applications Under 35 U.S.C. 111
If a new application is being filed and the application includes the necessary components for a filing date (see 37 CFR 1.53(b)-(d) and MPEP 506), a Filing Receipt (37 CFR 1.54) will be issued in due course and the date shown on this Acknowledgement Receipt will establish the filing date of the application.
National Stage of an International Application under 35 U.S.C. 371
If a timely submission to enter the national stage of an international application is compliant with the conditions of 35 U.S.C. 371 and other applicable requirements a Form PCT/DO/EO/903 indicating acceptance of the application as a national stage submission under 35 U.S.C. 371 will be issued in addition to the Filing Receipt, in due course.
New International Application Filed with the USPTO as a Receiving Office
If a new international application is being filed and the international application includes the necessary components for an international filing date (see PCT Article 11 and MPEP 1810), a Notification of the International Application Number and of the International Filing Date (Form PCT/RO/105) will be issued in due course, subject to prescriptions concerning national security, and the date shown on this Acknowledgement Receipt will establish the international filing date of the application.

UNITED STATES PATENT AND TRADEMARK OFFICE

UNITED STATES DEPARTMENT OF COMMERCE
United States Patent and Trademark Office
Address: COMMISSIONER FOR PATENTS
P.O. Box 1450
Alexandria, Virginia 22313-1450
www.uspto.gov

APPLICATION NO.	FILING DATE	FIRST NAMED INVENTOR	ATTORNEY DOCKET NO.	CONFIRMATION NO.
16/907,887	06/22/2020	Gregory G. Raleigh	RALEP025C1C1C1C1	2653

106963 7590 06/24/2021
Headwater Research LLC
1011 Pruitt Place
Tyler, TX 75703

EXAMINER
KAPLAN, BENJAMIN A

ART UNIT	PAPER NUMBER
2434	

NOTIFICATION DATE	DELIVERY MODE
06/24/2021	ELECTRONIC

Please find below and/or attached an Office communication concerning this application or proceeding.

The time period for reply, if any, is set in the attached communication.

Notice of the Office communication was sent electronically on above-indicated "Notification Date" to the following e-mail address(es):

patent@headwaterllc.com

PTOL-90A (Rev. 04/07)

Office Action Summary	Application No. 16/907,887	Applicant(s) Raleigh, Gregory G.	
	Examiner BENJAMIN A KAPLAN	Art Unit 2434	AIA (FITF) Status No

-- The MAILING DATE of this communication appears on the cover sheet with the correspondence address --

Period for Reply

A SHORTENED STATUTORY PERIOD FOR REPLY IS SET TO EXPIRE 3 MONTHS FROM THE MAILING DATE OF THIS COMMUNICATION.

- Extensions of time may be available under the provisions of 37 CFR 1.136(a). In no event, however, may a reply be timely filed after SIX (6) MONTHS from the mailing date of this communication.
- If NO period for reply is specified above, the maximum statutory period will apply and will expire SIX (6) MONTHS from the mailing date of this communication.
- Failure to reply within the set or extended period for reply will, by statute, cause the application to become ABANDONED (35 U.S.C. § 133). Any reply received by the Office later than three months after the mailing date of this communication, even if timely filed, may reduce any earned patent term adjustment. See 37 CFR 1.704(b).

Status

1)☑ Responsive to communication(s) filed on 22 June 2020.

☐ A declaration(s)/affidavit(s) under **37 CFR 1.130(b)** was/were filed on _____.

2a)☐ This action is **FINAL.** 2b) ☑ This action is non-final.

3)☐ An election was made by the applicant in response to a restriction requirement set forth during the interview on _____; the restriction requirement and election have been incorporated into this action.

4)☐ Since this application is in condition for allowance except for formal matters, prosecution as to the merits is closed in accordance with the practice under *Ex parte Quayle*, 1935 C.D. 11, 453 O.G. 213.

Disposition of Claims*

5) ☑ Claim(s) 2-13 is/are pending in the application.

5a) Of the above claim(s) _____ is/are withdrawn from consideration.

6) ☐ Claim(s) _____ is/are allowed.

7) ☑ Claim(s) 2-13 is/are rejected.

8) ☐ Claim(s) _____ is/are objected to.

9) ☐ Claim(s) _____ are subject to restriction and/or election requirement

* If any claims have been determined allowable, you may be eligible to benefit from the **Patent Prosecution Highway** program at a participating intellectual property office for the corresponding application. For more information, please see http://www.uspto.gov/patents/init_events/pph/index.jsp or send an inquiry to **PPHfeedback@uspto.gov.**

Application Papers

10)☐ The specification is objected to by the Examiner.

11)☑ The drawing(s) filed on 22 June 2020 is/are: a)☑ accepted or b)☐ objected to by the Examiner.

Applicant may not request that any objection to the drawing(s) be held in abeyance. See 37 CFR 1.85(a).

Replacement drawing sheet(s) including the correction is required if the drawing(s) is objected to. See 37 CFR 1.121(d).

Priority under 35 U.S.C. § 119

12)☐ Acknowledgment is made of a claim for foreign priority under 35 U.S.C. § 119(a)-(d) or (f).

Certified copies:

a)☐ All b)☐ Some** c)☐ None of the:

1.☐ Certified copies of the priority documents have been received.

2.☐ Certified copies of the priority documents have been received in Application No. _____.

3.☐ Copies of the certified copies of the priority documents have been received in this National Stage application from the International Bureau (PCT Rule 17.2(a)).

** See the attached detailed Office action for a list of the certified copies not received.

Attachment(s)

1) ☐ Notice of References Cited (PTO-892)

2) ☑ Information Disclosure Statement(s) (PTO/SB/08a and/or PTO/SB/08b) Paper No(s)/Mail Date (02/03/2021) x 5.

3) ☐ Interview Summary (PTO-413) Paper No(s)/Mail Date _____.

4) ☐ Other: _____.

Notice of Pre-AIA or AIA Status

The present application is being examined under the pre-AIA first to invent provisions.

Double Patenting

The nonstatutory double patenting rejection is based on a judicially created doctrine grounded in public policy (a policy reflected in the statute) so as to prevent the unjustified or improper timewise extension of the "right to exclude" granted by a patent and to prevent possible harassment by multiple assignees. A nonstatutory double patenting rejection is appropriate where the conflicting claims are not identical, but at least one examined application claim is not patentably distinct from the reference claim(s) because the examined application claim is either anticipated by, or would have been obvious over, the reference claim(s). See, e.g., *In re Berg*, 140 F.3d 1428, 46 USPQ2d 1226 (Fed. Cir. 1998); *In re Goodman*, 11 F.3d 1046, 29 USPQ2d 2010 (Fed. Cir. 1993); *In re Longi*, 759 F.2d 887, 225 USPQ 645 (Fed. Cir. 1985); *In re Van Ornum*, 686 F.2d 937, 214 USPQ 761 (CCPA 1982); *In re Vogel*, 422 F.2d 438, 164 USPQ 619 (CCPA 1970); *In re Thorington*, 418 F.2d 528, 163 USPQ 644 (CCPA 1969).

A timely filed terminal disclaimer in compliance with 37 CFR 1.321(c) or 1.321(d) may be used to overcome an actual or provisional rejection based on nonstatutory double patenting provided the reference application or patent either is shown to be commonly owned with the examined application, or claims an invention made as a result of activities undertaken within the scope of a joint research agreement. See MPEP § 717.02 for applications subject to examination under the first inventor to file provisions of the AIA as explained in MPEP § 2159. See MPEP § 2146 *et seq.* for applications not subject to examination under the first inventor to file provisions of the AIA. A terminal disclaimer must be signed in compliance with 37 CFR 1.321(b).

The USPTO Internet website contains terminal disclaimer forms which may be used. Please visit www.uspto.gov/patent/patents-forms. The filing date of the application in which the form is filed

determines what form (e.g., PTO/SB/25, PTO/SB/26, PTO/AIA/25, or PTO/AIA/26) should be used. A web-based eTerminal Disclaimer may be filled out completely online using web-screens. An eTerminal Disclaimer that meets all requirements is auto-processed and approved immediately upon submission. For more information about eTerminal Disclaimers, refer to www.uspto.gov/patents/process/file/efs/guidance/eTD-info-I.jsp.

Claims 2-13 rejected on the ground of nonstatutory double patenting as being unpatentable over claims 1-12 of U.S. Patent No. 10,694,385 B2. Although the claims at issue are not identical, they are not patentably distinct from each other because the claims of the present invention are substantially a reiteration of the systems claims of U.S. Patent No. 10,694,385 B2 as a corresponding method.

Conclusion

Any inquiry concerning this communication or earlier communications from the examiner should be directed to BENJAMIN A KAPLAN whose telephone number is (571)270-3170. The examiner can normally be reached on 9:00 a.m. - 5:00 p.m..

Examiner interviews are available via telephone, in-person, and video conferencing using a USPTO supplied web-based collaboration tool. To schedule an interview, applicant is encouraged to use the USPTO Automated Interview Request (AIR) at http://www.uspto.gov/interviewpractice.

If attempts to reach the examiner by telephone are unsuccessful, the examiner's supervisor, Kambiz Zand can be reached on (571)272-3811. The fax phone number for the organization where this application or proceeding is assigned is 571-273-8300.

Information regarding the status of an application may be obtained from the Patent Application Information Retrieval (PAIR) system. Status information for published applications may be obtained from either Private PAIR or Public PAIR. Status information for unpublished applications is available through Private PAIR only. For more information about the PAIR system, see https://ppair-

my.uspto.gov/pair/PrivatePair. Should you have questions on access to the Private PAIR system, contact the Electronic Business Center (EBC) at 866-217-9197 (toll-free). If you would like assistance from a USPTO Customer Service Representative or access to the automated information system, call 800-786-9199 (IN USA OR CANADA) or 571-272-1000.

/BENJAMIN A KAPLAN/
Examiner, Art Unit 2434

Index of Claims	Application/Control No.	Applicant(s)/Patent Under Reexamination
	16/907,887	Raleigh, Gregory G.
	Examiner	**Art Unit**
	BENJAMIN A KAPLAN	2434

✓	Rejected	-	Cancelled	N	Non-Elected	A	Appeal
=	Allowed	÷	Restricted	I	Interference	O	Objected

CLAIMS

☐ Claims renumbered in the same order as presented by applicant ☐ CPA ☐ T.D. ☐ R.1.47

CLAIM		DATE								
Final	Original	06/19/2021								
	1	-								
	2	✓								
	3	✓								
	4	✓								
	5	✓								
	6	✓								
	7	✓								
	8	✓								
	9	✓								
	10	✓								
	11	✓								
	12	✓								
	13	✓								

Search Notes	Application/Control No.	Applicant(s)/Patent Under Reexamination
	16/907,887	Raleigh, Gregory G.
	Examiner	**Art Unit**
	BENJAMIN A KAPLAN	2434

CPC - Searched*		
Symbol	**Date**	**Examiner**
G06F 15/177	06/19/2021	BK
G06Q 10/06315, 10/06375, 20/102, 20/20, 20/32, 20/40, 30/0207, 30/0241, 30/0283, 30/0284, 30/04, 30/0601, 40/00, 40/12	06/19/2021	BK
H04L 12/14, 12/1407, 41/0806, 41/0876, 41/0893, 41/5003, 41/5025, 41/5054, 47/20, 47/2408, 51/046, 63/0236, 63/04, 63/0428, 63/08, 63/0853, 63/0892, 63/10, 63/20, 67/145, 67/26, 67/2819, 67/306, 67/327, 67/34, 9/32, 9/3247	06/19/2021	BK
H04M 15/00, 15/49, 15/58, 15/61, 15/66, 15/80, 15/8055, 15/88, 2215/0188	06/19/2021	BK
H04W 12/00, 12/02, 12/037, 12/06, 12/08, 24/08, 28/02, 28/0215, 28/0268, 28/12, 4/02, 4/12, 4/18, 4/20, 4/24, 4/50, 48/14, 48/16, 72/0453, 8/02, 8/18, 8/20, 84/04, 84/042, 84/12, 88/06, 88/08	06/19/2021	BK
Y02P 90/80	06/19/2021	BK

CPC Combination Sets - Searched*		
Symbol	**Date**	**Examiner**

US Classification - Searched*			
Class	**Subclass**	**Date**	**Examiner**
726	1		

* See search history printout included with this form or the SEARCH NOTES box below to determine the scope of the search.

Search Notes		
Search Notes	**Date**	**Examiner**
EAST, Google, Inventor Search, Assignee Search	06/19/2021	BK

Search Notes	Application/Control No.	Applicant(s)/Patent Under Reexamination
	16/907,887	Raleigh, Gregory G.
	Examiner	**Art Unit**
	BENJAMIN A KAPLAN	2434

Interference Search			
US Class/CPC Symbol	**US Subclass/CPC Group**	**Date**	**Examiner**

Doc code: IDS
Doc description: Information Disclosure Statement (IDS) Filed

PTO/SB/08a (02-18)
Approved for use through 11/30/2020. OMB 0651-0031
U.S. Patent and Trademark Office; U.S. DEPARTMENT OF COMMERCE
Under the Paperwork Reduction Act of 1995, no persons are required to respond to a collection of information unless it contains a valid OMB control number.

INFORMATION DISCLOSURE STATEMENT BY APPLICANT

(Not for submission under 37 CFR 1.99)

Application Number	16907887
Filing Date	2020-06-22
First Named Inventor	RALEIGH, GREGORY
Art Unit	2434
Examiner Name	KAPLAN, BENJAMIN
Attorney Docket Number	RALEP025C1C1C1C1

U.S.PATENTS Remove

Examiner Initial*	Cite No	Patent Number	Kind Code[1]	Issue Date	Name of Patentee or Applicant of cited Document	Pages,Columns,Lines where Relevant Passages or Relevant Figures Appear
	1	10285025	B1	2019-05-07	Baker et al.	
	2	10326800	B2	2019-06-18	Raleigh et al.	
	3	10492102	B2	2019-11-26	Raleigh et al.	
	4	10582375	B2	2020-03-03	Raleigh	

If you wish to add additional U.S. Patent citation information please click the Add button. Add

U.S.PATENT APPLICATION PUBLICATIONS Remove

Examiner Initial*	Cite No	Publication Number	Kind Code[1]	Publication Date	Name of Patentee or Applicant of cited Document	Pages,Columns,Lines where Relevant Passages or Relevant Figures Appear
	1	20010048738	A	2001-12-06	Baniak, Paul G. et al.	
	2	20010053694		2001-12-20	IGARASHI, Yoichiro et al.	

ALL REFERENCES CONSIDERED EXCEPT WHERE LINED THROUGH. /B.A.K/

INFORMATION DISCLOSURE STATEMENT BY APPLICANT (Not for submission under 37 CFR 1.99)		
	Application Number	16907887
	Filing Date	2020-06-22
	First Named Inventor	RALEIGH, GREGORY
	Art Unit	2434
	Examiner Name	KAPLAN, BENJAMIN
	Attorney Docket Number	RALEP025C1C1C1C1

	3	20020013844	A1	2002-01-31	Garrett et al.	
	4	20020022472		2002-02-21	WATLER et al.	
	5	20020022483	A1	2002-02-21	Thompson et al.	
	6	20020049074	A	2002-04-25	Eisinger, Bernd et al.	
	7	20020099848	A1	2002-07-25	Lee, Hoon	
	8	20020116338		2002-08-22	GONTHIER, Jean-Charles et al.	
	9	20020120370	A1	2002-08-29	Parupudi et al.	
	10	20020120540		2002-08-29	KENDE et al.	
	11	20020131404		2002-09-19	MEHTA et al.	
	12	20020138599	A1	2002-09-26	Dilman et al.	
	13	20020138601		2002-09-26	PIPONIUS et al.	

INFORMATION DISCLOSURE STATEMENT BY APPLICANT (Not for submission under 37 CFR 1.99)		
	Application Number	16907887
	Filing Date	2020-06-22
	First Named Inventor	RALEIGH, GREGORY
	Art Unit	2434
	Examiner Name	KAPLAN, BENJAMIN
	Attorney Docket Number	RALEP025C1C1C1C1

	14	20020154751	A1	2002-10-24	Thompson et al.	
	15	20020161601	A	2002-10-31	Nauer, Bernhard et al.	
	16	20020164983		2002-11-07	Raviv, Li-On et al.	
	17	20020176377		2002-11-28	HAMILTON, Thomas E.	
	18	20020188732	A1	2002-12-12	Buckman et al.	
	19	20020191573	A1	2002-12-19	Whitehill et al.	
	20	20020199001		2002-12-26	WENOCUR et al.	
	21	20030004937		2003-01-02	SALMENKAITA et al.	
	22	20030005112		2003-01-02	KRAUTKREMER, Todd Joseph	
	23	20030013434		2003-01-16	ROSENBERG et al.	
	24	20030018524		2003-01-23	FISHMAN et al.	

INFORMATION DISCLOSURE STATEMENT BY APPLICANT (Not for submission under 37 CFR 1.99)		
	Application Number	16907887
	Filing Date	2020-06-22
	First Named Inventor	RALEIGH, GREGORY
	Art Unit	2434
	Examiner Name	KAPLAN, BENJAMIN
	Attorney Docket Number	RALEP025C1C1C1C1

	25	20030028623	A1	2003-02-06	Hennessey et al.	
	26	20030046396		2003-03-06	RICHTER et al.	
	27	20030050070		2003-03-13	MASHINSKY et al.	
	28	20030050837		2003-03-13	KIM, Do Sik	
	29	20030084321	A1	2003-05-01	Tarquini et al.	
	30	20030088671	A1	2003-05-08	Klinker et al.	
	31	20030133408		2003-07-17	CHENG et al.	
	32	20030134650	A1	2003-07-17	Sundar et al.	
	33	20030159030	A1	2003-08-21	Evans, Junius A.	
	34	20030161265		2003-08-28	CAO et al.	
	35	20030171112		2003-09-11	Lupper, Alfred et al.	

INFORMATION DISCLOSURE STATEMENT BY APPLICANT (Not for submission under 37 CFR 1.99)		
	Application Number	16907887
	Filing Date	2020-06-22
	First Named Inventor	RALEIGH, GREGORY
	Art Unit	2434
	Examiner Name	KAPLAN, BENJAMIN
	Attorney Docket Number	RALEP025C1C1C1C1

	36	20030182420		2003-09-25	JONES et al.	
	37	20030182435		2003-09-25	REDLICH et al.	
	38	20030184793	A1	2003-10-02	Pineau, Richard A.	
	39	20030188006	A	2003-10-02	Bard, Steven R.	
	40	20030188117	A	2003-10-02	Yoshino et al.	
	41	20030220984		2003-11-27	JONES et al.	
	42	20030224781		2003-12-04	MILFORD et al.	
	43	20030229900		2003-12-11	REISMAN, Richard	
	44	20030233332	A	2003-12-18	Keeler, James D. et al.	
	45	20030236745		2003-12-25	HARTSELL et al.	
	46	20040019539		2004-01-29	RAMAN et al.	

INFORMATION DISCLOSURE STATEMENT BY APPLICANT (Not for submission under 37 CFR 1.99)		
	Application Number	16907887
	Filing Date	2020-06-22
	First Named Inventor	RALEIGH, GREGORY
	Art Unit	2434
	Examiner Name	KAPLAN, BENJAMIN
	Attorney Docket Number	RALEP025C1C1C1C1

	47	20040019564	A1	2004-01-29	Goldthwaite et al.	
	48	20040021697		2004-02-05	BEATON et al.	
	49	20040024756	A1	2004-02-05	Rickard, John Terrell	
	50	20040030705		2004-02-12	BOWMAN-AMUAH, Michel K.	
	51	20040039792	A1	2004-02-26	Nakanishi, Tomoaki	
	52	20040044623		2004-03-04	WAKE et al.	
	53	20040047358		2004-03-11	CHEN et al.	
	54	20040054779	A1	2004-03-18	Takeshima et al.	
	55	20040073672		2004-04-15	FASCENDA, Anthony C.	
	56	20040082346		2004-04-29	SKYTT et al.	
	57	20040098715		2004-05-20	AGHERA et al.	

INFORMATION DISCLOSURE STATEMENT BY APPLICANT (Not for submission under 37 CFR 1.99)		
	Application Number	16907887
	Filing Date	2020-06-22
	First Named Inventor	RALEIGH, GREGORY
	Art Unit	2434
	Examiner Name	KAPLAN, BENJAMIN
	Attorney Docket Number	RALEP025C1C1C1C1

	58	20040102182	A	2004-05-27	Reith, Lothar et al.	
	59	20040103193		2004-05-27	PANDYA et al.	
	60	20040107360		2004-06-03	HERRMANN et al.	
	61	20040116140	A1	2004-06-17	Babbar et al.	
	62	20040127200		2004-07-01	SHAW et al.	
	63	20040127208	A1	2004-07-01	Nair et al.	
	64	20040127256	A1	2004-07-01	Goldthwaite et al.	
	65	20040132427		2004-07-08	Lee, Wan-Yeon et al.	
	66	20040133668	A1	2004-07-08	Nicholas III, Henry T.	
	67	20040137890	A1	2004-07-15	Kalke, Catherine	
	68	20040165596	A1	2004-08-26	Garcia et al.	

INFORMATION DISCLOSURE STATEMENT BY APPLICANT (Not for submission under 37 CFR 1.99)		
	Application Number	16907887
	Filing Date	2020-06-22
	First Named Inventor	RALEIGH, GREGORY
	Art Unit	2434
	Examiner Name	KAPLAN, BENJAMIN
	Attorney Docket Number	RALEP025C1C1C1C1

	69	20040167958	A1	2004-08-26	Stewart et al.	
	70	20040168052		2004-08-26	CLISHAM et al.	
	71	20040170191	A	2004-09-02	Guo et al.	
	72	20040176104	A	1841-03-12	Arcens	
	73	20040176104	A1	2004-09-09	Arcens	
	74	20040198331		2004-10-07	COWARD et al.	
	75	20040203755		2004-10-14	BRUNET, Jeffrey et al.	
	76	20040203833	A	2004-10-14	Rathunde, Dale F. et al.	
	77	20040225561	A1	2004-11-11	Hertzberg et al.	
	78	20040225898	A	2004-11-11	Frost, D. et al.	
	79	20040236547		2004-11-25	RAPPAPORT et al.	

INFORMATION DISCLOSURE STATEMENT BY APPLICANT (Not for submission under 37 CFR 1.99)		
	Application Number	16907887
	Filing Date	2020-06-22
	First Named Inventor	RALEIGH, GREGORY
	Art Unit	2434
	Examiner Name	KAPLAN, BENJAMIN
	Attorney Docket Number	RALEP025C1C1C1C1

	80	20040243680	A1	2004-12-02	Mayer, Georg	
	81	20040243992	A	2004-12-02	Gustafson et al.	
	82	20040249918		2004-12-09	SUNSHINE, Roger N.	
	83	20040255145	A	2004-12-16	Chow, Jerry	
	84	20040259534	A1	2004-12-23	Chaudhari et al.	
	85	20040260766	A1	2004-12-23	Barros et al.	
	86	20040267872	A1	2004-12-30	Serdy et al.	
	87	20050007993		2005-01-13	Chambers, Mahdi et al.	
	88	20050009499		2005-01-13	KOSTER, Karl	
	89	20050021995		2005-01-27	LAL et al.	
	90	20050041617	A1	2005-02-24	Huotari et al.	

INFORMATION DISCLOSURE STATEMENT BY APPLICANT (Not for submission under 37 CFR 1.99)		
	Application Number	16907887
	Filing Date	2020-06-22
	First Named Inventor	RALEIGH, GREGORY
	Art Unit	2434
	Examiner Name	KAPLAN, BENJAMIN
	Attorney Docket Number	RALEP025C1C1C1C1

	91	20050048950		2005-03-03	MORPER, Hans-Jochen	
	92	20050055291		2005-03-10	BEVENTE et al.	
	93	20050055309		2005-03-10	WILLIAMS et al.	
	94	20050055595	A	2005-03-10	Frazer et al.	
	95	20050060266		2005-03-17	DEMELLO et al.	
	96	20050060525	A1	2005-03-17	Schwartz et al.	
	97	20050075115	A1	2005-04-07	Corneille et al.	
	98	20050079863	A	2005-04-14	Macaluso, Anthony G.	
	99	20050091505	A1	2005-04-28	Riley et al.	
	100	20050096024	A1	2005-05-05	Bicker et al.	
	101	20050097516		2005-05-05	DONNELLY et al.	

INFORMATION DISCLOSURE STATEMENT BY APPLICANT (Not for submission under 37 CFR 1.99)		
	Application Number	16907887
	Filing Date	2020-06-22
	First Named Inventor	RALEIGH, GREGORY
	Art Unit	2434
	Examiner Name	KAPLAN, BENJAMIN
	Attorney Docket Number	RALEP025C1C1C1C1

	102	20050107091		2005-05-19	VANNITHAMBY et al.	
	103	20050108075	A1	2005-05-19	Douglis et al.	
	104	20050111463	A1	2005-05-26	Leung et al.	
	105	20050128967		2005-06-16	SCOBBIE, Donald MacGregor	
	106	20050135264	A1	2005-06-23	Popoff et al.	
	107	20050163320	A1	2005-07-28	Brown et al.	
	108	20050166043		2005-07-28	ZHANG et al.	
	109	20050183143		2005-08-18	ANDERHOLM et al.	
	110	20050186948	A	2005-08-25	Gallagher et al.	
	111	20050198377		2005-09-08	FERGUSON et al.	
	112	20050216421		2005-09-29	BARRY et al.	

INFORMATION DISCLOSURE STATEMENT BY APPLICANT (Not for submission under 37 CFR 1.99)		
	Application Number	16907887
	Filing Date	2020-06-22
	First Named Inventor	RALEIGH, GREGORY
	Art Unit	2434
	Examiner Name	KAPLAN, BENJAMIN
	Attorney Docket Number	RALEP025C1C1C1C1

	113	20050228985		2005-10-13	YLIKOSKI et al.	
	114	20050238046		2005-10-27	HASSAN et al.	
	115	20050239447	A1	2005-10-27	Holzman et al.	
	116	20050245241	A1	2005-11-03	Durand et al.	
	117	20050246282		2005-11-03	NASLUND et al.	
	118	20050250508		2005-11-10	GUO et al.	
	119	20050250536	A1	2005-11-10	Deng et al.	
	120	20050254435		2005-11-17	MOAKLEY et al.	
	121	20050266825		2005-12-01	CLAYTON, Steve	
	122	20050266880		2005-12-01	GUPTA, Vivek G.	
	123	20060014519		2006-01-19	MARSH et al.	

INFORMATION DISCLOSURE STATEMENT BY APPLICANT (Not for submission under 37 CFR 1.99)		
	Application Number	16907887
	Filing Date	2020-06-22
	First Named Inventor	RALEIGH, GREGORY
	Art Unit	2434
	Examiner Name	KAPLAN, BENJAMIN
	Attorney Docket Number	RALEP025C1C1C1C1

	124	20060019632		2006-01-26	CUNNINGHAM et al.	
	125	20060020787	A1	2006-01-26	Choyi et al.	
	126	20060026679	A1	2006-02-02	Zakas	
	127	20060030306	A1	2006-02-09	Kuhn, Brian Gerald	
	128	20060034256		2006-02-16	ADDAGATLA et al.	
	129	20060035631	A1	2006-02-16	White et al.	
	130	20060040642		2006-02-23	BORIS et al.	
	131	20060045245		2006-03-02	AARON et al.	
	132	20060048223		2006-03-02	LEE et al.	
	133	20060068796	A	2006-03-30	Millen, Stephanie L. et al.	
	134	20060072451	A1	2006-04-06	Ross, Alan D.	

INFORMATION DISCLOSURE STATEMENT BY APPLICANT (Not for submission under 37 CFR 1.99)		
	Application Number	16907887
	Filing Date	2020-06-22
	First Named Inventor	RALEIGH, GREGORY
	Art Unit	2434
	Examiner Name	KAPLAN, BENJAMIN
	Attorney Docket Number	RALEP025C1C1C1C1

	135	20060072550	A1	2006-04-06	Davis et al.	
	136	20060072646		2006-04-06	FEHER, Kamilo	
	137	20060075506	A1	2006-04-06	Sanda et al.	
	138	20060085543		2006-04-20	HRASTAR et al.	
	139	20060095517	A1	2006-05-04	O'Connor et al.	
	140	20060098627	A1	2006-05-11	Karaoguz et al.	
	141	20060099970	A1	2006-05-11	Morgan et al.	
	142	20060101507	A1	2006-05-11	Camenisch, Ja L.	
	143	20060112016		2006-05-25	ISHIBASHI, Yoshihito	
	144	20060114821	A1	2006-06-01	Willey et al.	
	145	20060114832	A	2006-06-01	Hamilton et al.	

INFORMATION DISCLOSURE STATEMENT BY APPLICANT (Not for submission under 37 CFR 1.99)		
	Application Number	16907887
	Filing Date	2020-06-22
	First Named Inventor	RALEIGH, GREGORY
	Art Unit	2434
	Examiner Name	KAPLAN, BENJAMIN
	Attorney Docket Number	RALEP025C1C1C1C1

	146	20060126562	A1	2006-06-15	Liu, Huitao	
	147	20060135144	A	2006-06-22	Jothipragasam, Premkumar	
	148	20060136882	A1	2006-06-22	Noonan et al.	
	149	20060143066	A1	2006-06-29	Calabria	
	150	20060143098		2006-06-29	LAZARIDIS, Mihal	
	151	20060156398	A	2006-07-13	Ross et al.	
	152	20060160536	A	2006-07-20	Chou, Joey	
	153	20060165060		2006-07-27	DUA, Robin	
	154	20060168128	A	2006-07-27	Sistla et al.	
	155	20060173959	A	2006-08-03	Mckelvie et al.	
	156	20060174035	A	2006-08-03	Tufail, Mudassir	

INFORMATION DISCLOSURE STATEMENT BY APPLICANT (Not for submission under 37 CFR 1.99)		
	Application Number	16907887
	Filing Date	2020-06-22
	First Named Inventor	RALEIGH, GREGORY
	Art Unit	2434
	Examiner Name	KAPLAN, BENJAMIN
	Attorney Docket Number	RALEP025C1C1C1C1

	157	20060178917		2006-08-10	MERRIAM et al.	
	158	20060178918		2006-08-10	MIKURAK, Michael G.	
	159	20060182137	A1	2006-08-17	Zhou et al.	
	160	20060183462		2006-08-17	KOLEHMAINEN, Mikko	
	161	20060190314		2006-08-24	HERNANDEZ, Rick	
	162	20060190987	A1	2006-08-24	Ohta et al.	
	163	20060193280	A1	2006-08-31	Lee et al.	
	164	20060199608		2006-09-07	DUNN et al.	
	165	20060200663	A1	2006-09-07	Thornton, Andrew J.	
	166	20060206709	A1	2006-09-14	Labrou et al.	
	167	20060206904		2006-09-14	WATKINS et al.	

INFORMATION DISCLOSURE STATEMENT BY APPLICANT (Not for submission under 37 CFR 1.99)		
	Application Number	16907887
	Filing Date	2020-06-22
	First Named Inventor	RALEIGH, GREGORY
	Art Unit	2434
	Examiner Name	KAPLAN, BENJAMIN
	Attorney Docket Number	RALEP025C1C1C1C1

	168	20060218395		2006-09-28	MAES, Stephane H.	
	169	20060233108		2006-10-19	KRISHNAN, Murali R.	
	170	20060233166		2006-10-19	BOU-DIAB et al.	
	171	20060236095		2006-10-19	SMITH et al.	
	172	20060242685		2006-10-26	HEARD et al.	
	173	20060258341		2006-11-16	MILLER et al.	
	174	20060274706	A1	2006-12-07	Chen et al.	
	175	20060277590	A1	2006-12-07	Limont et al.	
	176	20060291419	A1	2006-12-28	McConnell et al.	
	177	20060291477		2006-12-28	CROAK et al.	
	178	20070005795	A1	2007-01-04	Gonzalez, Ruben	

INFORMATION DISCLOSURE STATEMENT BY APPLICANT (Not for submission under 37 CFR 1.99)		
	Application Number	16907887
	Filing Date	2020-06-22
	First Named Inventor	RALEIGH, GREGORY
	Art Unit	2434
	Examiner Name	KAPLAN, BENJAMIN
	Attorney Docket Number	RALEP025C1C1C1C1

	179	20070019670		2007-01-25	FALARDEAU, Eric	
	180	20070022289		2007-01-25	ALT et al.	
	181	20070025301	A	2007-02-01	Petersson et al.	
	182	20070033194	A	2007-02-08	Srinivas et al.	
	183	20070033197	A	2007-02-08	Scherzer, Shimon et al.	
	184	20070035390	A1	2007-02-15	Thomas et al.	
	185	20070036312		2007-02-15	CAI et al.	
	186	20070055694		2007-03-08	RUGE et al.	
	187	20070060200	A1	2007-03-15	Boris et al.	
	188	20070061243	A1	2007-03-15	Ramer et al.	
	189	20070061800	A1	2007-03-15	Cheng et al.	

INFORMATION DISCLOSURE STATEMENT BY APPLICANT (Not for submission under 37 CFR 1.99)		
	Application Number	16907887
	Filing Date	2020-06-22
	First Named Inventor	RALEIGH, GREGORY
	Art Unit	2434
	Examiner Name	KAPLAN, BENJAMIN
	Attorney Docket Number	RALEP025C1C1C1C1

	190	20070061878		2007-03-15	HAGIU, Costin et al. et al.	
	191	20070073899	A1	2007-03-29	Judge et al.	
	192	20070076616		2007-04-05	NGO et al.	
	193	20070093243		2007-04-26	KAPADEKAR et al.	
	194	20070100981		2007-05-03	ADAMCZYK et al.	
	195	20070101426		2007-05-03	LEE et al.	
	196	20070104126		2007-05-10	CALHOUN et al.	
	197	20070104169	A1	2007-05-10	Polson	
	198	20070109983	A	2007-05-17	Shankar, Rohit et al.	
	199	20070111740	A1	2007-05-17	Wandel	
	200	20070130283	A1	2007-06-07	Klein et al.	

INFORMATION DISCLOSURE STATEMENT BY APPLICANT (Not for submission under 37 CFR 1.99)		
	Application Number	16907887
	Filing Date	2020-06-22
	First Named Inventor	RALEIGH, GREGORY
	Art Unit	2434
	Examiner Name	KAPLAN, BENJAMIN
	Attorney Docket Number	RALEP025C1C1C1C1

	201	20070130315	A1	2007-06-07	Friend et al.	
	202	20070140113	A1	2007-06-21	Gemelos	
	203	20070140145	A	2007-06-21	Kumar et al.	
	204	20070140275		2007-06-21	BOWMAN et al.	
	205	20070143824	A1	2007-06-21	Shahbazi, Majid	
	206	20070147317	A	2007-06-28	Smith et al.	
	207	20070147324		2007-06-28	McGary, Faith	
	208	20070155365	A	2007-07-05	Kim, Sung-Jun et al.	
	209	20070165630	A1	2007-07-19	Rasanen et al.	
	210	20070168499	A	2007-07-19	Chu, Jing-Long	
	211	20070171856	A1	2007-07-26	Bruce et al.	

INFORMATION DISCLOSURE STATEMENT BY APPLICANT (Not for submission under 37 CFR 1.99)		
	Application Number	16907887
	Filing Date	2020-06-22
	First Named Inventor	RALEIGH, GREGORY
	Art Unit	2434
	Examiner Name	KAPLAN, BENJAMIN
	Attorney Docket Number	RALEP025C1C1C1C1

	212	20070174490	A1	2007-07-26	Choi et al.	
	213	20070191006	A1	2007-08-16	Carpenter	
	214	20070192460	A1	2007-08-16	Choi et al.	
	215	20070198656		2007-08-23	MAZZAFERRI et al.	
	216	20070201502	A1	2007-08-30	Abramson, Nathan	
	217	20070213054	A1	2007-09-13	Han, Seung-Wook	
	218	20070220251		2007-09-20	ROSENBERG et al.	
	219	20070226225		2007-09-27	YIU et al.	
	220	20070226775	A	2007-09-27	Andreasen et al.	
	221	20070234402	A1	2007-10-04	Khosravi et al.	
	222	20070243862		2007-10-18	COSKUN et al.	

INFORMATION DISCLOSURE STATEMENT BY APPLICANT (Not for submission under 37 CFR 1.99)		
	Application Number	16907887
	Filing Date	2020-06-22
	First Named Inventor	RALEIGH, GREGORY
	Art Unit	2434
	Examiner Name	KAPLAN, BENJAMIN
	Attorney Docket Number	RALEP025C1C1C1C1

	223	20070248100	A1	2007-10-25	Zuberi et al.	
	224	20070254646	A1	2007-11-01	Sokondar	
	225	20070254675		2007-11-01	ZORLU OZER et al.	
	226	20070255769	A1	2007-11-01	Agrawal et al.	
	227	20070255797	A1	2007-11-01	Dunn et al.	
	228	20070255848		2007-11-01	SEWALL et al.	
	229	20070257767	A1	2007-11-08	Beeson, Curt	
	230	20070259656	A	2007-11-08	Jeong, Jong Woo	
	231	20070259673		2007-11-08	WILLARS et al.	
	232	20070263558		2007-11-15	SALOMONE, Leonardo	
	233	20070266422	A1	2007-11-15	Germano et al.	

INFORMATION DISCLOSURE STATEMENT BY APPLICANT (Not for submission under 37 CFR 1.99)		
	Application Number	16907887
	Filing Date	2020-06-22
	First Named Inventor	RALEIGH, GREGORY
	Art Unit	2434
	Examiner Name	KAPLAN, BENJAMIN
	Attorney Docket Number	RALEP025C1C1C1C1

	234	20070274327		2007-11-29	KAARELA et al.	
	235	20070280453		2007-12-06	Kelley, Sean S.	
	236	20070282896		2007-12-06	WYDROUG et al.	
	237	20070293191	A1	2007-12-20	Mir et al.	
	238	20070294395		2007-12-20	STRUB et al.	
	239	20070294410	A1	2007-12-20	Pandya et al.	
	240	20070297378	A1	2007-12-27	Poyhonen et al.	
	241	20070298764		2007-12-27	CLAYTON, Steve	
	242	20070299965	A1	2007-12-27	Nieh et al.	
	243	20070300252		2007-12-27	Acharya, Swarup et al.	
	244	20080005285		2008-01-03	ROBINSON et al.	

INFORMATION DISCLOSURE STATEMENT BY APPLICANT (Not for submission under 37 CFR 1.99)		
	Application Number	16907887
	Filing Date	2020-06-22
	First Named Inventor	RALEIGH, GREGORY
	Art Unit	2434
	Examiner Name	KAPLAN, BENJAMIN
	Attorney Docket Number	RALEP025C1C1C1C1

	245	20080005561		2008-01-03	BROWN et al.	
	246	20080010379	A	2008-01-10	Zhao, Hang	
	247	20080010452		2008-01-10	HOLTZMAN et al.	
	248	20080018494	A1	2008-01-24	Waite et al.	
	249	20080022354	A	2008-01-24	Grewal, Karanvir et al.	
	250	20080025230	A	2008-01-31	Patel et al.	
	251	20080032715	A1	2008-02-07	Jia et al.	
	252	20080034063	A1	2008-02-07	Yee, Robert	
	253	20080034419	A	2008-02-07	Mullick et al.	
	254	20080039102		2008-02-14	SEWALL et al.	
	255	20080049630		2008-02-28	KOZISEK et al.	

INFORMATION DISCLOSURE STATEMENT BY APPLICANT (Not for submission under 37 CFR 1.99)		
	Application Number	16907887
	Filing Date	2020-06-22
	First Named Inventor	RALEIGH, GREGORY
	Art Unit	2434
	Examiner Name	KAPLAN, BENJAMIN
	Attorney Docket Number	RALEP025C1C1C1C1

	256	20080050715	A1	2008-02-28	Golczewski et al.	
	257	20080051076		2008-02-28	O'Shaughnessy, John et al.	
	258	20080052387		2008-02-28	HEINZ et al.	
	259	20080056273	A	2008-03-06	Pelletier et al.	
	260	20080059474		2008-03-06	LIM, Keng	
	261	20080059743		2008-03-06	BYCHKOV et al.	
	262	20080060066		2008-03-06	WYNN et al.	
	263	20080062900		2008-03-13	RAO, Bindu Rama	
	264	20080064367		2008-03-13	NATH et al.	
	265	20080066149		2008-03-13	LIM, Keng	
	266	20080066150		2008-03-13	LIM, Keng	

INFORMATION DISCLOSURE STATEMENT BY APPLICANT (Not for submission under 37 CFR 1.99)		
	Application Number	16907887
	Filing Date	2020-06-22
	First Named Inventor	RALEIGH, GREGORY
	Art Unit	2434
	Examiner Name	KAPLAN, BENJAMIN
	Attorney Docket Number	RALEP025C1C1C1C1

	267	20080066181	A1	2008-03-13	Haveson et al.	
	268	20080070550	A	2008-03-20	Hose, David Alan	
	269	20080077705	A1	2008-03-27	Li et al.	
	270	20080080457	A1	2008-04-03	Cole, Terry L.	
	271	20080081606		2008-04-03	COLE, Terry L.	
	272	20080082643		2008-04-03	STORRIE et al.	
	273	20080083013		2008-04-03	SOLIMAN et al.	
	274	20080085707		2008-04-10	FADELL, Tony	
	275	20080089295	A	2008-04-17	Keeler, James D. et al.	
	276	20080089303	A1	2008-04-17	Wirtanen et al.	
	277	20080095339		2008-04-24	ELLIOTT et al.	

INFORMATION DISCLOSURE STATEMENT BY APPLICANT (Not for submission under 37 CFR 1.99)		
	Application Number	16907887
	Filing Date	2020-06-22
	First Named Inventor	RALEIGH, GREGORY
	Art Unit	2434
	Examiner Name	KAPLAN, BENJAMIN
	Attorney Docket Number	RALEP025C1C1C1C1

	278	20080096559	A1	2008-04-24	Phillips et al.	
	279	20080098062		2008-04-24	BALIA, Hinal K.	
	280	20080109679		2008-05-08	WRIGHT et al.	
	281	20080120129	A	2008-05-22	Seubert et al.	
	282	20080120668		2008-05-22	Yau, Frank Chuen-Foo	
	283	20080120688		2008-05-22	QIU et al.	
	284	20080125079	A1	2008-05-29	O'Neil et al.	
	285	20080126287	A1	2008-05-29	Cox et al.	
	286	20080127304	A1	2008-05-29	Ginter et al.	
	287	20080130534		2008-06-05	TOMIOKA, Tazuko	
	288	20080130656		2008-06-05	KIM et al.	

INFORMATION DISCLOSURE STATEMENT BY APPLICANT (Not for submission under 37 CFR 1.99)		
	Application Number	16907887
	Filing Date	2020-06-22
	First Named Inventor	RALEIGH, GREGORY
	Art Unit	2434
	Examiner Name	KAPLAN, BENJAMIN
	Attorney Docket Number	RALEP025C1C1C1C1

	289	20080132201		2008-06-05	KARLBERG, Johan	
	290	20080132268	A1	2008-06-05	Choi-Grogan et al.	
	291	20080134330		2008-06-05	KAPOOR et al.	
	292	20080139210	A	2008-06-12	Gisby et al.	
	293	20080147454		2008-06-19	WALKER et al.	
	294	20080160958		2008-07-03	ABICHANDANI et al.	
	295	20080162637		2008-07-03	ADAMCZYK et al.	
	296	20080162704		2008-07-03	POPLETT et al.	

If you wish to add additional U.S. Published Application citation information please click the Add button. Add

FOREIGN PATENT DOCUMENTS Remove

Examiner Initial*	Cite No	Foreign Document Number[3]	Country Code[2] i	Kind Code[4]	Publication Date	Name of Patentee or Applicant of cited Document	Pages,Columns,Lines where Relevant Passages or Relevant Figures Appear	T[5]
	1	2688553	CA	A1	2008-12-04	Yoggie Security Systems, Inc.		

EFS Web 2.1.18

ALL REFERENCES CONSIDERED EXCEPT WHERE LINED THROUGH. /B.A.K/

INFORMATION DISCLOSURE STATEMENT BY APPLICANT (Not for submission under 37 CFR 1.99)		
	Application Number	16907887
	Filing Date	2020-06-22
	First Named Inventor	RALEIGH, GREGORY
	Art Unit	2434
	Examiner Name	KAPLAN, BENJAMIN
	Attorney Docket Number	RALEP025C1C1C1C1

	2	101035308	CN	A	2006-03-09	Huawei Tech. Co. Ltd.		
	3	101080055	CN	A	2007-11-28	Tencent Technology (Shenzhen) Co., Ltd.		
	4	101115248	CN	A	2008-01-30	Lenovo Beijing Ltd.		
	5	101123553	CN	A	2007-09-11	SouTheast University		
	6	101127988	CN	A	2008-02-20	ZTE Corporation		
	7	101155343	CN	B	2006-09-29	Huawei Tech. Co. Ltd.		
	8	101183958	CN	A	2008-05-21	Huawei Tech. Co. Ltd.		
	9	101335666	CN	A	2008-12-31	Hangzhou H3C Technologies Co., Ltd.		
	10	101341764	CN	A	2009-01-07	Telefonaktiebolaget LM Ericsson		
	11	101815275	CN	A	2010-08-25	Yang, Liu		
	12	1310401	CN	A	2001-08-29	Wang, Di Xing		

INFORMATION DISCLOSURE STATEMENT BY APPLICANT (Not for submission under 37 CFR 1.99)		
	Application Number	16907887
	Filing Date	2020-06-22
	First Named Inventor	RALEIGH, GREGORY
	Art Unit	2434
	Examiner Name	KAPLAN, BENJAMIN
	Attorney Docket Number	RALEP025C1C1C1C1

	13	1345154A	CN		2002-04-17	Datang Microelectronics Tech. Co.		
	14	1508734	CN	A	2004-06-30	Chinese Creative Corp.		
	15	1538730	CN	A	2004-10-20	Zhongxing Communication Co., Ltd.		
	16	1567818	CN	A	2005-01-19	Huawei Tech. Co. Ltd.		
	17	1801829	CN	A	2006-07-12	Kunda Computer Technology (Kunshan) Co., Ltd.		
	18	1802839	CN	A	2006-07-12	Motorola Inc.		
	19	1867024	CN	A	2006-11-22	Huawei Technologies Co., Ltd.		
	20	1878160	CN	A	2006-12-13	Huawei Technologies Co., Ltd.		
	21	1889777	CN	A	2006-07-19	Huawei Tech. Co. Ltd.		
	22	1937511	CN	A	2007-03-28	ZTE		
	23	1098490	EP	A2	2001-05-09	Nortel Networks Ltd.		

INFORMATION DISCLOSURE STATEMENT BY APPLICANT (Not for submission under 37 CFR 1.99)		
	Application Number	16907887
	Filing Date	2020-06-22
	First Named Inventor	RALEIGH, GREGORY
	Art Unit	2434
	Examiner Name	KAPLAN, BENJAMIN
	Attorney Docket Number	RALEP025C1C1C1C1

	24	1289326	EP	A1	2003-03-05	Motorola, Inc.		
	25	1463238	EP		2004-09-29	Alcatel		
	26	1503548	EP	A1	2005-02-02	FG Microtec GmbH		
	27	1545114	EP	A1	2005-06-22	Alcatel		
	28	1739518	EP		2007-01-03	Research In Motion Limited		
	29	1772988	EP		2007-04-11	Huawei Technologies Co., Ltd.		
	30	1850575	EP	A1	2007-10-31	Research In Motion		
	31	1887732	EP	A1	2008-02-13	Huawei Technologies Co., Ltd.		
	32	1942698	EP	A1	2008-07-09	Apple Inc.		
	33	1978772	EP		2008-10-08	British Telecommunications Public Limited Company		
	34	2007065	EP	A1	2008-12-24	Huawei Technologies Co., Ltd.		

INFORMATION DISCLOSURE STATEMENT BY APPLICANT (Not for submission under 37 CFR 1.99)		
	Application Number	16907887
	Filing Date	2020-06-22
	First Named Inventor	RALEIGH, GREGORY
	Art Unit	2434
	Examiner Name	KAPLAN, BENJAMIN
	Attorney Docket Number	RALEP025C1C1C1C1

	35	2026514	EP	A1	2009-02-18	Nokia Siemens Networks		
	36	2005339247	JP	A	2005-12-08	Secured Communications		
	37	2006041989	JP		2006-02-09	Fujitsu Ltd.		
	38	2006155263	JP	A	2006-06-15	NEC Corporation		
	39	2006197137	JP		2006-07-27	NTT Docomo Inc.		
	40	2006344007	JP	A	2006-12-21	Hitachi Ltd.		
	41	2007318354	JP	A	2007-12-06	Fujitsu Ten Ltd.		
	42	2008301121	JP	A	2008-12-11	Kyocera Corp.		
	43	2009111919	JP		2009-05-21	Kyocera Communications Systems		
	44	2009212707	JP	A	2009-09-17	Fujitsu Ltd.		
	45	2009218773	JP		2009-09-24	Advanced Telecommunication Research Institute Inte		

INFORMATION DISCLOSURE STATEMENT BY APPLICANT (Not for submission under 37 CFR 1.99)		
	Application Number	16907887
	Filing Date	2020-06-22
	First Named Inventor	RALEIGH, GREGORY
	Art Unit	2434
	Examiner Name	KAPLAN, BENJAMIN
	Attorney Docket Number	RALEP025C1C1C1C1

	46	2009232107	JP	A	2009-10-08	Fujitsu Ltd.		
	47	3148713	JP	B2	2001-03-26	ATR Kankyo Tekio Tsushin Kenkyusho		
	48	20040053858	KR	A	2004-06-25	Electronics and Telecommunications Research Instit		
	49	0208863	WO		2002-01-31	Telemac Corp.		
	50	1998058505	WO		1998-12-23	Sonera Oy		

If you wish to add additional Foreign Patent Document citation information please click the Add button Add

NON-PATENT LITERATURE DOCUMENTS Remove

Examiner Initials*	Cite No	Include name of the author (in CAPITAL LETTERS), title of the article (when appropriate), title of the item (book, magazine, journal, serial, symposium, catalog, etc), date, pages(s), volume-issue number(s), publisher, city and/or country where published.	T5
	1	"Ads and movies on the run," the Gold Coast Bulletin, Southport, Qld, Jan. 29, 2008	
	2	"ASA/PIX: Allow Split Tunneling for VPN Clients on the ASA Configuration Example," Document ID 70917, January 10, 2008	
	3	"Communication Concepts for Mobile Agent Systems," by Joachim Baumann et al.; Inst. Of Parallel and Distributed High-Performance Systems, Univ. of Stuttgart, Germany, pp. 123-135, 1997	
	4	"End to End QoS Solution for Real-time Multimedia Application;" Computer Engineering and Applications, 2007, 43 (4): 155-159, by Tan Zu-guo, Wang Wen-juan; Information and Science School, Zhanjian Normal College, Zhan jiang, Guangdong 524048, China	

INFORMATION DISCLOSURE STATEMENT BY APPLICANT (Not for submission under 37 CFR 1.99)		
	Application Number	16907887
	Filing Date	2020-06-22
	First Named Inventor	RALEIGH, GREGORY
	Art Unit	2434
	Examiner Name	KAPLAN, BENJAMIN
	Attorney Docket Number	RALEP025C1C1C1C1

	5	"Jentro Technologies launches Zenlet platform to accelerate location-based content delivery to mobile devices," The Mobile Internet, Boston, MA, Feb. 2008	
	6	"The Construction of Intelligent Residential District in Use of Cable Television Network," Shandong Science, Vol. 13, No. 2, June 2000	
	7	3rd Generation Partnership Project, "Technical Specification Group Services and System Aspects; General Packet Radio Service (GPRS) Enhancements for Evolved Universal Terrestrial Radio Access Network (E-UTRAN) Access," Release 8, Document No. 3GPP TS 23.401, V8.4.0, December 2008	
	8	3rd Generation Partnership Project, "Technical Specification Group Services and System Aspects; Policy and Charging Control Architecture," Release 8, Document No. 3GPP TS 23.203, V8.4.0, December 2008	
	9	Accuris Networks, "The Business Value of Mobile Data Offload – a White Paper", 2010	
	10	Ahmed et al., "A Context-Aware Vertical Handover Decision Algorithm for Multimode Mobile Terminals and Its Performance," BenQ Mobile, Munich Germany; University of Klagenfurt, Klagenfurt, Austria; 2006	
	11	ALONISTIOTI et al., "Intelligent Architectures Enabling Flexible Service Provision and Adaptability," 2002	
	12	Amazon Technologies, Inc., "Kindle™ User's Guide," 3rd Edition, Copyright 2004-2009	
	13	Android Cupcake excerpts, The Android Open Source Project, Feb. 10, 2009	
	14	ANTON, B. et al., "Best Current Practices for Wireless Internet Service Provider (WISP) Roaming"; Release Date February 2003, Version 1.0; Wi-Fi Alliance – Wireless ISP Roaming (WISPr)	
	15	Blackberry Mobile Data System, version 4.1, Technical Overview, 2006	

INFORMATION DISCLOSURE STATEMENT BY APPLICANT (Not for submission under 37 CFR 1.99)		
	Application Number	16907887
	Filing Date	2020-06-22
	First Named Inventor	RALEIGH, GREGORY
	Art Unit	2434
	Examiner Name	KAPLAN, BENJAMIN
	Attorney Docket Number	RALEP025C1C1C1C1

	16	BYRD, "Open Secure Wireless," May 5, 2010	
	17	CHANDRASEKHAR et al., "Femtocell Networks: A Survey," June 28, 2008	
	18	CHAOUCHI et al., "Policy Based Networking in the Integration Effort of 4G Networks and Services," 2004 IEEE	
	19	Cisco Systems, Inc., "Cisco Mobile Exchange (CMX) Solution Guide: Chapter 2 - Overview of GSM, GPRS, and UMTS," November 4, 2008	
	20	Client Guide for Symantec Endpoint Protection and Symantec Network Access Control, 2007	
	21	DIKAIAKOS et al., "A Distributed Middleware Infrastructure for Personalized Services," November 24, 2003	
	22	Dixon et al., "Triple Play Digital Services: Comcast and Verizon (Digital Phone, Television, and Internet), August 2007	
	23	Droid Wall 1.3.7 description 20100428 obtained from https://www.freewarelovers.com/android/apps/droid-wall	
	24	Ehnert, "Small application to monitor IP trafic on a Blackberry - 1.01.03 ", March 27, 2008; http://www.ehnert.net/MiniMoni/	
	25	European Commission, "Data Roaming Tariffs - Transparency Measures," obtained from EUROPA - Europe's Information Society Thematic Portal website, June 24, 2011: "http://ec.europa.eu/information_society/activities/roaming/data/measures/index_en.htm."	
	26	FAROOQ et al., "An IEEE 802.16 WiMax Module for the NS-3 Simulator," March 2-6, 2009	

INFORMATION DISCLOSURE STATEMENT BY APPLICANT (Not for submission under 37 CFR 1.99)		
	Application Number	16907887
	Filing Date	2020-06-22
	First Named Inventor	RALEIGH, GREGORY
	Art Unit	2434
	Examiner Name	KAPLAN, BENJAMIN
	Attorney Docket Number	RALEP025C1C1C1C1

	27	Fujitsu, "Server Push Technology Survey and Bidirectional Communication in HTTP Browser," January 9, 2008 (JP)	
	28	HAN et al., "Information Collection Services for Qos-Aware Mobile Applications," 2005	
	29	HARTMANN et al., "Agent-Based Banking Transactions & Information Retrieval - What About Performance Issues?" 1999	
	30	Hewlett-Packard Development Company, LP, "IP Multimedia Services Charging," white paper, January 2006	
	31	HOSSAIN et al., "Gain-Based Selection of Ambient Media Services in Pervasive Environments," Mobile Networks and Applications. 03 October 2008	
	32	Jing et al., "Client-Server Computing in Mobile Environments," GTE Labs. Inc., Purdue University, ACM Computing Surveys, Vol. 31, No. 2, June 1999	
	33	Kasper et al., "Subscriber Authentication in mobile cellular Networks with virtual software SIM Credentials using Trusted Computing," Fraunhofer-Institute for Secure Information Technology SIT, Darmstadt, Germany; ICACT 2008	
	34	Kassar et al., "An overview of vertical handover decision strategies in heterogeneous wireless networks," ScienceDirect, University Pierre & Marie Curie, Paris, France, 6/5/2007	
	35	Kim, "Free wireless a high-wire act; MetroFi needs to draw enough ads to make service add profits," San Francisco Chronicle, Aug. 21, 2006	
	36	KNIGHT et al., "Layer 2 and 3 Virtual Private Networks: Taxonomy, Technology, and Standarization Efforts," IEEE Communications Magazine, June 2004	
	37	Koutsopoulou et al., "Charging, Accounting and Billing Management Schemes In Mobile Telecommunication Networks and the Internet," IEEE Communications Surveys & Tutorials, First Quarter 2004, Vol. 6, No. 1	

INFORMATION DISCLOSURE STATEMENT BY APPLICANT (Not for submission under 37 CFR 1.99)		
	Application Number	16907887
	Filing Date	2020-06-22
	First Named Inventor	RALEIGH, GREGORY
	Art Unit	2434
	Examiner Name	KAPLAN, BENJAMIN
	Attorney Docket Number	RALEP025C1C1C1C1

	38	KOUTSOPOULOU et al., "Middleware Platform for the Support of Charging Reconfiguration Actions," 2005	
	39	Kuntze et al., "Trustworthy content push," Fraunhofer-Institute for Secure Information Technology SIT; Germany; WCNC 2007 proceedings, IEEE	
	40	KYRIAKAKOS et al., "Ubiquitous Service Provision in Next Generation Mobile Networks," Proceedings of the 13th IST Mobile and Wireless Communications Summit, Lyon, France, June 2004	
	41	LI, Yu, "Dedicated E-Reading Device: The State of the Art and The Challenges," Scroll, Vol. 1, No. 1, 2008	
	42	Loopt User Guide, metroPCS, 7/17/2008	
	43	Muntermann et al., "Potentiale und Sicherheitsanforderungen mobiler Finanzinformationsdienste und deren Systeminfrastrukturen," Chair of Mobile Commerce & Multilateral Security, Goethe Univ. Frankfurt, 2004	
	44	NetLimiter Lite 4.0.19.0; http://www.heise.de/download/netlimiter-lite-3617703.html from vol. 14/2007	
	45	NILSSON et al., "A Novel MAC Scheme for Solving the QoS Parameter Adjustment Problem in IEEE802.11e EDCA," February 2006	
	46	Nuzman et al., "A compund model for TCP connection arrivals for LAN and WAN applications," Oct. 22, 2002	
	47	Open Mobile Alliance (OMA), Push Architecture, Candidate Version 2.2; Oct. 2, 2007; OMA-AD-Push-V2_2-20071002-C	
	48	OPPLIGER, Rolf, "Internet Security: Firewalls and Bey," Communications of the ACM, May 1997, Vol. 40. No. 5	

INFORMATION DISCLOSURE STATEMENT BY APPLICANT (Not for submission under 37 CFR 1.99)		
	Application Number	16907887
	Filing Date	2020-06-22
	First Named Inventor	RALEIGH, GREGORY
	Art Unit	2434
	Examiner Name	KAPLAN, BENJAMIN
	Attorney Docket Number	RALEP025C1C1C1C1

	49	RAO et al., "Evolution of Mobile Location-Based Services," Communication of the ACM, December 2003	
	50	Richtel, "Cellphone consumerism; If even a debit card is too slow, now you have a new way to act on impulse: [National Edition]," National Post, Canada, Oct. 2, 2007	

If you wish to add additional non-patent literature document citation information please click the Add button Add

EXAMINER SIGNATURE

Examiner Signature	/BENJAMIN A KAPLAN/	Date Considered	06/19/2021

*EXAMINER: Initial if reference considered, whether or not citation is in conformance with MPEP 609. Draw line through a citation if not in conformance and not considered. Include copy of this form with next communication to applicant.

[1] See Kind Codes of USPTO Patent Documents at www.USPTO.GOV or MPEP 901.04. [2] Enter office that issued the document, by the two-letter code (WIPO Standard ST.3). [3] For Japanese patent documents, the indication of the year of the reign of the Emperor must precede the serial number of the patent document. [4] Kind of document by the appropriate symbols as indicated on the document under WIPO Standard ST.16 if possible. [5] Applicant is to place a check mark here if English language translation is attached.

ALL REFERENCES CONSIDERED EXCEPT WHERE LINED THROUGH. /B.A.K/

INFORMATION DISCLOSURE STATEMENT BY APPLICANT (Not for submission under 37 CFR 1.99)		
	Application Number	16907887
	Filing Date	2020-06-22
	First Named Inventor	RALEIGH, GREGORY
	Art Unit	2434
	Examiner Name	KAPLAN, BENJAMIN
	Attorney Docket Number	RALEP025C1C1C1C1

CERTIFICATION STATEMENT

Please see 37 CFR 1.97 and 1.98 to make the appropriate selection(s):

That each item of information contained in the information disclosure statement was first cited in any communication from a foreign patent office in a counterpart foreign application not more than three months prior to the filing of the information disclosure statement. See 37 CFR 1.97(e)(1).

OR

☐ That no item of information contained in the information disclosure statement was cited in a communication from a foreign patent office in a counterpart foreign application, and, to the knowledge of the person signing the certification after making reasonable inquiry, no item of information contained in the information disclosure statement was known to any individual designated in 37 CFR 1.56(c) more than three months prior to the filing of the information disclosure statement. See 37 CFR 1.97(e)(2).

See attached certification statement.

The fee set forth in 37 CFR 1.17 (p) has been submitted herewith.

X A certification statement is not submitted herewith.

SIGNATURE

A signature of the applicant or representative is required in accordance with CFR 1.33, 10.18. Please see CFR 1.4(d) for the form of the signature.

Signature	/James E. Harris/	Date (YYYY-MM-DD)	2021-02-03
Name/Print	James E. Harris	Registration Number	40013

This collection of information is required by 37 CFR 1.97 and 1.98. The information is required to obtain or retain a benefit by the public which is to file (and by the USPTO to process) an application. Confidentiality is governed by 35 U.S.C. 122 and 37 CFR 1.14. This collection is estimated to take 1 hour to complete, including gathering, preparing and submitting the completed application form to the USPTO. Time will vary depending upon the individual case. Any comments on the amount of time you require to complete this form and/or suggestions for reducing this burden, should be sent to the Chief Information Officer, U.S. Patent and Trademark Office, U.S. Department of Commerce, P.O. Box 1450, Alexandria, VA 22313-1450. DO NOT SEND FEES OR COMPLETED FORMS TO THIS ADDRESS. **SEND TO: Commissioner for Patents, P.O. Box 1450, Alexandria, VA 22313-1450.**

Privacy Act Statement

The Privacy Act of 1974 (P.L. 93-579) requires that you be given certain information in connection with your submission of the attached form related to a patent application or patent. Accordingly, pursuant to the requirements of the Act, please be advised that: (1) the general authority for the collection of this information is 35 U.S.C. 2(b)(2); (2) furnishing of the information solicited is voluntary; and (3) the principal purpose for which the information is used by the U.S. Patent and Trademark Office is to process and/or examine your submission related to a patent application or patent. If you do not furnish the requested information, the U.S. Patent and Trademark Office may not be able to process and/or examine your submission, which may result in termination of proceedings or abandonment of the application or expiration of the patent.

The information provided by you in this form will be subject to the following routine uses:

1. The information on this form will be treated confidentially to the extent allowed under the Freedom of Information Act (5 U.S.C. 552) and the Privacy Act (5 U.S.C. 552a). Records from this system of records may be disclosed to the Department of Justice to determine whether the Freedom of Information Act requires disclosure of these record s.

2. A record from this system of records may be disclosed, as a routine use, in the course of presenting evidence to a court, magistrate, or administrative tribunal, including disclosures to opposing counsel in the course of settlement negotiations.

3. A record in this system of records may be disclosed, as a routine use, to a Member of Congress submitting a request involving an individual, to whom the record pertains, when the individual has requested assistance from the Member with respect to the subject matter of the record.

4. A record in this system of records may be disclosed, as a routine use, to a contractor of the Agency having need for the information in order to perform a contract. Recipients of information shall be required to comply with the requirements of the Privacy Act of 1974, as amended, pursuant to 5 U.S.C. 552a(m).

5. A record related to an International Application filed under the Patent Cooperation Treaty in this system of records may be disclosed, as a routine use, to the International Bureau of the World Intellectual Property Organization, pursuant to the Patent Cooperation Treaty.

6. A record in this system of records may be disclosed, as a routine use, to another federal agency for purposes of National Security review (35 U.S.C. 181) and for review pursuant to the Atomic Energy Act (42 U.S.C. 218(c)).

7. A record from this system of records may be disclosed, as a routine use, to the Administrator, General Services, or his/her designee, during an inspection of records conducted by GSA as part of that agency's responsibility to recommend improvements in records management practices and programs, under authority of 44 U.S.C. 2904 and 2906. Such disclosure shall be made in accordance with the GSA regulations governing inspection of records for this purpose, and any other relevant (i.e., GSA or Commerce) directive. Such disclosure shall not be used to make determinations about individuals.

8. A record from this system of records may be disclosed, as a routine use, to the public after either publication of the application pursuant to 35 U.S.C. 122(b) or issuance of a patent pursuant to 35 U.S.C. 151. Further, a record may be disclosed, subject to the limitations of 37 CFR 1.14, as a routine use, to the public if the record was filed in an application which became abandoned or in which the proceedings were terminated and which application is referenced by either a published application, an application open to public inspections or an issued patent.

9. A record from this system of records may be disclosed, as a routine use, to a Federal, State, or local law enforcement agency, if the USPTO becomes aware of a violation or potential violation of law or regulation.

ALL REFERENCES CONSIDERED EXCEPT WHERE LINED THROUGH. /B.A.K/

Doc code: IDS
Doc description: Information Disclosure Statement (IDS) Filed

PTO/SB/08a (02-18)
Approved for use through 11/30/2020. OMB 0651-0031
U.S. Patent and Trademark Office; U.S. DEPARTMENT OF COMMERCE
Under the Paperwork Reduction Act of 1995, no persons are required to respond to a collection of information unless it contains a valid OMB control number.

INFORMATION DISCLOSURE STATEMENT BY APPLICANT (**Not for submission under 37 CFR 1.99)**	Application Number	16907887
	Filing Date	2020-06-22
	First Named Inventor	RALEIGH, GREGORY
	Art Unit	2434
	Examiner Name	KAPLAN, BENJAMIN
	Attorney Docket Number	RALEP025C1C1C1C1

U.S.PATENTS Remove

Examiner Initial*	Cite No	Patent Number	Kind Code[1]	Issue Date	Name of Patentee or Applicant of cited Document	Pages,Columns,Lines where Relevant Passages or Relevant Figures Appear
	1	5131020	A	1992-07-14	Liebesny et al.	
	2	5283904		1994-02-01	CARSON, David G. et al.	
	3	5325532	A	1994-06-28	Crosswy et al.	
	4	5572528	A	1996-11-05	Shuen, Pauline	
	5	5577100	A	1996-11-19	McGregor et al.	
	6	5594777		1997-01-14	Makkonen, Matti et al.	
	7	5617539	A	1997-04-01	Ludwig et al.	
	8	5630159	A	1997-05-13	Zancho, William F.	

ALL REFERENCES CONSIDERED EXCEPT WHERE LINED THROUGH. /B.A.K/

INFORMATION DISCLOSURE STATEMENT BY APPLICANT (Not for submission under 37 CFR 1.99)		
	Application Number	16907887
	Filing Date	2020-06-22
	First Named Inventor	RALEIGH, GREGORY
	Art Unit	2434
	Examiner Name	KAPLAN, BENJAMIN
	Attorney Docket Number	RALEP025C1C1C1C1

	9	5633484	A	1997-05-27	Zancho, William F. et al.	
	10	5633868	A	1997-05-27	Baldwin et al.	
	11	5754953	A	1998-05-19	Briancon et al.	
	12	5774532	A	1998-06-30	Gottlieb et al.	
	13	5794142		1998-08-11	VANTTILA et al.	
	14	5814798	A	1998-09-29	Zancho, William F.	
	15	5889477		1999-03-30	Fastenrath, Ulrich	
	16	5892900		1999-04-06	GINTER et al.	
	17	5903845		1999-05-11	BUHRMANN et al.	
	18	5915008	A	1999-06-22	Dulman, Scott	
	19	5915226	A	1999-06-22	Martineau	

INFORMATION DISCLOSURE STATEMENT BY APPLICANT (Not for submission under 37 CFR 1.99)		
	Application Number	16907887
	Filing Date	2020-06-22
	First Named Inventor	RALEIGH, GREGORY
	Art Unit	2434
	Examiner Name	KAPLAN, BENJAMIN
	Attorney Docket Number	RALEP025C1C1C1C1

	20	5933778		1999-08-03	BUHRMANN et al.	
	21	5940472		1999-08-17	NEWMAN et al.	
	22	5974439	A	1999-10-26	Bollella, Gregory	
	23	5983270	A	1999-11-09	Abraham et al.	
	24	6035281		2000-03-07	Crosskey, James P. et al.	
	25	6038452		2000-03-14	Strawczynski, Leo et al.	
	26	6038540	A	2000-03-14	Krist et al.	
	27	6047268		2000-04-04	BARTOLI et al.	
	28	6058434	A	2000-05-02	Wilt et al.	
	29	6061571	A	2000-05-09	Tamura, Hideo	
	30	6064878		2000-05-16	DENKER, John Stewart et al.	

INFORMATION DISCLOSURE STATEMENT BY APPLICANT (Not for submission under 37 CFR 1.99)		
	Application Number	16907887
	Filing Date	2020-06-22
	First Named Inventor	RALEIGH, GREGORY
	Art Unit	2434
	Examiner Name	KAPLAN, BENJAMIN
	Attorney Docket Number	RALEP025C1C1C1C1

	31	6078953		2000-06-20	VAID et al.	
	32	6081591		2000-06-27	SKOOG, Frederick H.	
	33	6098878		2000-08-08	DENT et al.	
	34	6104700	A	2000-08-15	Haddock, Stephen R. et al.	
	35	6115823	A	2000-09-05	Velasco et al.	
	36	6119933	A	2000-09-19	Wong et al.	
	37	6125391	A	2000-09-26	Meltzer et al.	
	38	6141565	A	2000-10-31	Feuerstein et al.	
	39	6141686		2000-10-31	JACKOWSKI et al.	
	40	6148336		2000-11-14	THOMAS et al.	
	41	6154738		2000-11-28	CALL, Charles Gainor	

INFORMATION DISCLOSURE STATEMENT BY APPLICANT (Not for submission under 37 CFR 1.99)		
	Application Number	16907887
	Filing Date	2020-06-22
	First Named Inventor	RALEIGH, GREGORY
	Art Unit	2434
	Examiner Name	KAPLAN, BENJAMIN
	Attorney Docket Number	RALEP025C1C1C1C1

	42	6157636	A	2000-12-05	Voit et al.	
	43	6185576	B1	2001-02-06	Mcintosh, Lowrie	
	44	6198915		2001-03-06	McGREGOR et al.	
	45	6219786	B1	2001-04-17	Cunningham et al.	
	46	6226277		2001-05-01	Chuah, Mooi Choo	
	47	6246870	B1	2001-06-12	Dent et al.	
	48	6263055		2001-07-17	GARLAND et al.	
	49	6292828		2001-09-18	Williams, David L.	
	50	6317584		2001-11-13	ABU-AMARA et al.	
	51	6370139	B2	2002-04-09	Redmond	
	52	6381316		2002-04-30	JOYCE, Simon James et al.	

INFORMATION DISCLOSURE STATEMENT BY APPLICANT (Not for submission under 37 CFR 1.99)		
	Application Number	16907887
	Filing Date	2020-06-22
	First Named Inventor	RALEIGH, GREGORY
	Art Unit	2434
	Examiner Name	KAPLAN, BENJAMIN
	Attorney Docket Number	RALEP025C1C1C1C1

	53	6393014	B1	2002-05-21	Daly et al.	
	54	6397259	B1	2002-05-28	Lincke et al.	
	55	6401113	B2	2002-06-04	Lazaridis et al.	
	56	6418147		2002-07-09	WIEDEMAN, Robert A.	
	57	6438575	B1	2002-08-20	Khan et al.	
	58	6445777	B1	2002-09-03	Clark, Curtis	
	59	6449479		2002-09-10	SANCHEZ, Eduardo	
	60	6466984	B1	2002-10-15	Naveh et al.	
	61	6477670		2002-11-05	Ahmadvand, Nima	
	62	6502131		2002-12-31	VAID, Aseem et al.	
	63	6505114		2003-01-07	LUCIANI, Sergio	

INFORMATION DISCLOSURE STATEMENT BY APPLICANT (Not for submission under 37 CFR 1.99)		
	Application Number	16907887
	Filing Date	2020-06-22
	First Named Inventor	RALEIGH, GREGORY
	Art Unit	2434
	Examiner Name	KAPLAN, BENJAMIN
	Attorney Docket Number	RALEP025C1C1C1C1

	64	6510152	B1	2003-01-21	Gerszberg et al.	
	65	6522629	B1	2003-02-18	Anderson, Sr., Ronald D.	
	66	6532235		2003-03-11	BENSON et al.	
	67	6532579		2003-03-11	SATO et al.	
	68	6535855	B1	2003-03-18	Cahill et al.	
	69	6535949	B1	2003-03-18	Parker, Kenneth W.	
	70	6539082		2003-03-25	LOWE et al.	
	71	6542500	B1	2003-04-01	Gerszberg et al.	
	72	6542992		2003-04-01	Peirce, Kenneth L. et al.	
	73	6546016	B1	2003-04-08	Gerszberg et al.	
	74	6563806		2003-05-13	YANO et al.	

INFORMATION DISCLOSURE STATEMENT BY APPLICANT (Not for submission under 37 CFR 1.99)		
	Application Number	16907887
	Filing Date	2020-06-22
	First Named Inventor	RALEIGH, GREGORY
	Art Unit	2434
	Examiner Name	KAPLAN, BENJAMIN
	Attorney Docket Number	RALEP025C1C1C1C1

	75	6570974	B1	2003-05-27	Gerszberg et al.	
	76	6574321		2003-06-03	COX et al.	
	77	6574465		2003-06-03	MARSH et al.	
	78	6578076	B1	2003-06-10	Putzolu, David Matthew	
	79	6581092		2003-06-17	MOTOYAMA, Tetsuro	
	80	6591098	B1	2003-07-08	Shieh et al.	
	81	6598034	B1	2003-07-22	Kloth, Axel K.	
	82	6601040	B1	2003-07-29	Kolls, H. Brock	
	83	6603969		2003-08-05	VUORISTO et al.	
	84	6603975	B1	2003-08-05	Inouchi et al.	
	85	6606744		2003-08-12	MIKURAK, Michael G.	

INFORMATION DISCLOSURE STATEMENT BY APPLICANT (Not for submission under 37 CFR 1.99)		
	Application Number	16907887
	Filing Date	2020-06-22
	First Named Inventor	RALEIGH, GREGORY
	Art Unit	2434
	Examiner Name	KAPLAN, BENJAMIN
	Attorney Docket Number	RALEP025C1C1C1C1

	86	6628934	A	2003-09-30	Rosenberg et al.	
	87	6631122		2003-10-07	ARUNACHALAM, Vaidhyanathan et al.	
	88	6636721	B2	2003-10-21	Threadgill et al.	
	89	6639975	B1	2003-10-28	O'Neal et al.	
	90	6640097		2003-10-28	Corrigan, Louis et al.	
	91	6640334	B	2003-10-28	Rasmussen, John H.	
	92	6650887		2003-11-18	McGREGOR et al.	
	93	6651101		2003-11-18	GAI et al.	
	94	6654786	B1	2003-11-25	Fox et al.	
	95	6654814		2003-11-25	Britton, Kathryn H. et al.	
	96	6658254		2003-12-02	PURDY et al.	

INFORMATION DISCLOSURE STATEMENT BY APPLICANT (Not for submission under 37 CFR 1.99)		
	Application Number	16907887
	Filing Date	2020-06-22
	First Named Inventor	RALEIGH, GREGORY
	Art Unit	2434
	Examiner Name	KAPLAN, BENJAMIN
	Attorney Docket Number	RALEP025C1C1C1C1

	97	6662014	B1	2003-12-09	Walsh, Patrick Jay	
	98	6678516	B2	2004-01-13	Nordman et al.	
	99	6683853		2004-01-27	Kannas, Chris et al.	
	100	6684244		2004-01-27	GOLDMAN et al.	
	101	6690918	B2	2004-02-10	Evans et al.	
	102	6694362	B1	2004-02-17	Secor et al.	
	103	6697821	B2	2004-02-24	Ziff et al.	
	104	6725031		2004-04-20	WATLER et al.	
	105	6725256	B1	2004-04-20	Albal et al.	
	106	6732176	B1	2004-05-04	Stewart et al.	
	107	6735206	B1	2004-05-11	Oki et al.	

INFORMATION DISCLOSURE STATEMENT BY APPLICANT (Not for submission under 37 CFR 1.99)		
	Application Number	16907887
	Filing Date	2020-06-22
	First Named Inventor	RALEIGH, GREGORY
	Art Unit	2434
	Examiner Name	KAPLAN, BENJAMIN
	Attorney Docket Number	RALEP025C1C1C1C1

	108	6748195	B1	2004-06-08	Phillips, W. Garland	
	109	6748437	B1	2004-06-08	Mankude et al.	
	110	6751296	B1	2004-06-15	Albal et al.	
	111	6754470		2004-06-22	Hendrickson, Keith et al.	
	112	6757717	B1	2004-06-29	Goldstein, Leonid	
	113	6760417	B1	2004-07-06	Wallenius, Jukka	
	114	6763000		2004-07-13	WALSH, Peter J.	
	115	6763226	B1	2004-07-13	McZeal Jr., Alfred	
	116	6765864		2004-07-20	NATARAJAN et al.	
	117	6765925		2004-07-20	Sawyer, Wilson et al.	
	118	6782412		2004-08-24	BROPHY, Kevin et al.	

INFORMATION DISCLOSURE STATEMENT BY APPLICANT (Not for submission under 37 CFR 1.99)		
	Application Number	16907887
	Filing Date	2020-06-22
	First Named Inventor	RALEIGH, GREGORY
	Art Unit	2434
	Examiner Name	KAPLAN, BENJAMIN
	Attorney Docket Number	RALEP025C1C1C1C1

	119	6785889		2004-08-31	WILLIAMS, Peter	
	120	6792461	B1	2004-09-14	Hericourt, Olivier	

If you wish to add additional U.S. Patent citation information please click the Add button. Add

U.S.PATENT APPLICATION PUBLICATIONS Remove

Examiner Initial*	Cite No	Publication Number	Kind Code[1]	Publication Date	Name of Patentee or Applicant of cited Document	Pages,Columns,Lines where Relevant Passages or Relevant Figures Appear
	1	20080164304		2008-07-10	NARASIMHAN et al.	
	2	20080166993	A1	2008-07-10	Gautier et al.	
	3	20080167027		2008-07-10	GAUTIER et al.	
	4	20080167033		2008-07-10	BECKERS, Michel	
	5	20080168275	A1	2008-07-10	DeAtley et al.	
	6	20080168523		2008-07-10	ANSARI et al.	
	7	20080177998		2008-07-24	APSANGI et al.	

INFORMATION DISCLOSURE STATEMENT BY APPLICANT (Not for submission under 37 CFR 1.99)		
	Application Number	16907887
	Filing Date	2020-06-22
	First Named Inventor	RALEIGH, GREGORY
	Art Unit	2434
	Examiner Name	KAPLAN, BENJAMIN
	Attorney Docket Number	RALEP025C1C1C1C1

	8	20080178300	A1	2008-07-24	Brown et al.	
	9	20080181117	A1	2008-07-31	ACKE et al.	
	10	20080183812		2008-07-31	PAUL et al.	
	11	20080184127		2008-07-31	RAFEY et al.	
	12	20080189760		2008-08-07	ROSENBERG et al.	
	13	20080201266	A	2008-08-21	Chua et al.	
	14	20080207167		2008-08-28	BUGENHAGEN, Michael K.	
	15	20080212470		2008-09-04	CASTANEDA et al.	
	16	20080212751	A1	2008-09-04	Chung, Simon	
	17	20080219268		2008-09-11	DENNISON, Larry R.	
	18	20080221951		2008-09-11	STANFORTH et al.	

INFORMATION DISCLOSURE STATEMENT BY APPLICANT (Not for submission under 37 CFR 1.99)		
	Application Number	16907887
	Filing Date	2020-06-22
	First Named Inventor	RALEIGH, GREGORY
	Art Unit	2434
	Examiner Name	KAPLAN, BENJAMIN
	Attorney Docket Number	RALEP025C1C1C1C1

	19	20080222692		2008-09-11	ANDERSSON et al.	
	20	20080225748		2008-09-18	KHEMANI et al.	
	21	20080229385		2008-09-18	FEDER et al.	
	22	20080229388		2008-09-18	MAES, Stephane H.	
	23	20080235511		2008-09-25	O'BRIEN, William G. et al.	
	24	20080240373		2008-10-02	WILHELM, Robert D.	
	25	20080250053	A	2008-10-09	Aaltonen, Janne et al.	
	26	20080256593		2008-10-16	VINBERG et al.	
	27	20080259924	A1	2008-10-23	Gooch et al.	
	28	20080262798		2008-10-23	KIM, Eun Ah et al.	
	29	20080263348	A	2008-10-23	Zaltsman et al.	

INFORMATION DISCLOSURE STATEMENT BY APPLICANT (Not for submission under 37 CFR 1.99)		
	Application Number	16907887
	Filing Date	2020-06-22
	First Named Inventor	RALEIGH, GREGORY
	Art Unit	2434
	Examiner Name	KAPLAN, BENJAMIN
	Attorney Docket Number	RALEP025C1C1C1C1

	30	20080268813		2008-10-30	MAES, Stephane H.	
	31	20080270212	A	2008-10-30	Blight et al.	
	32	20080279216	A1	2008-11-13	Sharif-Ahmadi et al.	
	33	20080282319	A1	2008-11-13	Fontijn et al.	
	34	20080291872	A1	2008-11-27	Henriksson	
	35	20080293395	A1	2008-11-27	Mathews et al.	
	36	20080298230		2008-12-04	LUFT et al.	
	37	20080305793		2008-12-11	GALLAGHER et al.	
	38	20080311885		2008-12-18	DAWSON et al.	
	39	20080313315	A	2008-12-18	Karaoguz et al.	
	40	20080313730		2008-12-18	Iftimie, Sorin et al.	

INFORMATION DISCLOSURE STATEMENT BY APPLICANT (Not for submission under 37 CFR 1.99)		
	Application Number	16907887
	Filing Date	2020-06-22
	First Named Inventor	RALEIGH, GREGORY
	Art Unit	2434
	Examiner Name	KAPLAN, BENJAMIN
	Attorney Docket Number	RALEP025C1C1C1C1

	41	20080316923		2008-12-25	FEDDERS et al.	
	42	20080318547		2008-12-25	BALLOU et al.	
	43	20080318550		2008-12-25	DeATLEY, Dallas	
	44	20080319879		2008-12-25	CARROLL et al.	
	45	20080320497	A1	2008-12-25	Tarkoma et al.	
	46	20090005000	A	2009-01-01	Baker, Matthew et al.	
	47	20090005005		2009-01-01	FORSTALL et al.	
	48	20090006116	A	2009-01-01	Baker, Matthew et al.	
	49	20090006200	A	2009-01-01	Baker, Matthew et al.	
	50	20090006229	A1	2009-01-01	Sweeney et al.	
	51	20090013157		2009-01-08	BEAULE, Stephane	

INFORMATION DISCLOSURE STATEMENT BY APPLICANT (Not for submission under 37 CFR 1.99)		
	Application Number	16907887
	Filing Date	2020-06-22
	First Named Inventor	RALEIGH, GREGORY
	Art Unit	2434
	Examiner Name	KAPLAN, BENJAMIN
	Attorney Docket Number	RALEP025C1C1C1C1

	52	20090016310	A1	2009-01-15	Rasal, Digambar L.	
	53	20090017809	A1	2009-01-15	Jethi et al.	
	54	20090036111	A1	2009-02-05	Danford et al.	
	55	20090042536	A1	2009-02-12	Bernard et al.	
	56	20090044185	A1	2009-02-12	Krivopaltsev, Eugene	
	57	20090046707	A1	2009-02-19	Smires et al.	
	58	20090046723		2009-02-19	RAHMAN, Reshad A. et al.	
	59	20090047989	A1	2009-02-19	Harmon et al.	
	60	20090048913	A1	2009-02-19	Shenfield et al.	
	61	20090049156	A1	2009-02-19	Aronsson et al.	
	62	20090049518	A1	2009-02-19	Roman et al.	

INFORMATION DISCLOSURE STATEMENT BY APPLICANT (Not for submission under 37 CFR 1.99)		
	Application Number	16907887
	Filing Date	2020-06-22
	First Named Inventor	RALEIGH, GREGORY
	Art Unit	2434
	Examiner Name	KAPLAN, BENJAMIN
	Attorney Docket Number	RALEP025C1C1C1C1

	63	20090054030		2009-02-26	GOLDS, David	
	64	20090065571	A1	2009-03-12	Jain, Deepak	
	65	20090067372		2009-03-12	SHAH, Keyur C. et al.	
	66	20090068984		2009-03-12	BURNETT, R. Alan	
	67	20090070379	A1	2009-03-12	Rappaport, Theodore R.	
	68	20090077622		2009-03-19	BAUM et al.	
	69	20090079699		2009-03-26	SUN, Jian	
	70	20090113514		2009-04-30	HU, Q. James	
	71	20090125619		2009-05-14	ANTANI, Snehal S.	
	72	20090132860	A1	2009-05-21	LIU et al.	
	73	20090149154	A1	2009-06-11	Bhasin et al.	

INFORMATION DISCLOSURE STATEMENT BY APPLICANT (Not for submission under 37 CFR 1.99)		
	Application Number	16907887
	Filing Date	2020-06-22
	First Named Inventor	RALEIGH, GREGORY
	Art Unit	2434
	Examiner Name	KAPLAN, BENJAMIN
	Attorney Docket Number	RALEP025C1C1C1C1

	74	20090157792	A1	2009-06-18	Fiatal	
	75	20090163173	A1	2009-06-25	Williams, Timothy D.	
	76	20090172077		2009-07-02	ROXBURGH, David et al.	
	77	20090180391		2009-07-16	PETERSEN et al.	
	78	20090181662	A1	2009-07-16	Fleischman et al.	
	79	20090197585		2009-08-06	AARON, Jeffrey A.	
	80	20090197612	A1	2009-08-06	Kiiskinen, Arto	
	81	20090203352	A1	2009-08-13	Fordon et al.	
	82	20090217065	A1	2009-08-27	Araujo JR.	
	83	20090217364	A1	2009-08-27	Salmela et al.	
	84	20090219170		2009-09-03	CLARK, Ryan C. et al.	

INFORMATION DISCLOSURE STATEMENT BY APPLICANT (Not for submission under 37 CFR 1.99)		
	Application Number	16907887
	Filing Date	2020-06-22
	First Named Inventor	RALEIGH, GREGORY
	Art Unit	2434
	Examiner Name	KAPLAN, BENJAMIN
	Attorney Docket Number	RALEP025C1C1C1C1

	85	20090248883		2009-10-01	SURYANARAYANA et al.	
	86	20090254857	A	2009-10-08	Romine et al.	
	87	20090257379		2009-10-15	ROBINSON et al.	
	88	20090262715	A1	2009-10-22	Juang	
	89	20090271514		2009-10-29	THOMAS et al.	
	90	20090282127	A	2009-11-12	Leblanc et al.	
	91	20090286507		2009-11-19	O'NEIL et al.	
	92	20090287921		2009-11-19	ZHU et al.	
	93	20090288140	A1	2009-11-19	Huber et al.	
	94	20090291665	A1	2009-11-26	Gaskarth et al.	
	95	20090299857		2009-12-03	BRUBAKER, Curtis M.	

INFORMATION DISCLOSURE STATEMENT BY APPLICANT (Not for submission under 37 CFR 1.99)		
	Application Number	16907887
	Filing Date	2020-06-22
	First Named Inventor	RALEIGH, GREGORY
	Art Unit	2434
	Examiner Name	KAPLAN, BENJAMIN
	Attorney Docket Number	RALEP025C1C1C1C1

	96	20090307696	A1	2009-12-10	Vals et al.	
	97	20090307746	A1	2009-12-10	DI et al.	
	98	20090315735		2009-12-24	BHAVANI, Neeraj S. et al.	
	99	20090320110	A1	2009-12-24	NICOLSON et al.	
	100	20100017506		2010-01-21	FADELL, Anthony	
	101	20100020822		2010-01-28	ZERILLO, Anthony J. et al.	
	102	20100027469	A1	2010-02-04	Gurajala et al.	
	103	20100027559		2010-02-04	LIN, Hung-Ming et al.	
	104	20100030890	A	2010-02-04	Dutta et al.	
	105	20100041364		2010-02-18	LOTT, Robert Wayne et al.	
	106	20100041365	A1	2010-02-18	Lott et al.	

INFORMATION DISCLOSURE STATEMENT BY APPLICANT (Not for submission under 37 CFR 1.99)		
	Application Number	16907887
	Filing Date	2020-06-22
	First Named Inventor	RALEIGH, GREGORY
	Art Unit	2434
	Examiner Name	KAPLAN, BENJAMIN
	Attorney Docket Number	RALEP025C1C1C1C1

	107	20100041391	A1	2010-02-18	Spivey et al.	
	108	20100042675		2010-02-18	FUJII, Hiroshi	
	109	20100043068		2010-02-18	VARADHAN et al.	
	110	20100069074	A1	2010-03-18	Kodialam et al.	
	111	20100071053		2010-03-18	ANSARI et al.	
	112	20100075666	A1	2010-03-25	Garner, Neil Robert	
	113	20100077035	A1	2010-03-25	Li et al.	
	114	20100080202		2010-04-01	Hanson, Mark	
	115	20100082431		2010-04-01	RAMER et al.	
	116	20100088387	A1	2010-04-08	Calamera	
	117	20100103820		2010-04-29	FULLER et al.	

INFORMATION DISCLOSURE STATEMENT BY APPLICANT (Not for submission under 37 CFR 1.99)		
	Application Number	16907887
	Filing Date	2020-06-22
	First Named Inventor	RALEIGH, GREGORY
	Art Unit	2434
	Examiner Name	KAPLAN, BENJAMIN
	Attorney Docket Number	RALEP025C1C1C1C1

	118	20100113020	A1	2010-05-06	Subramanian et al.	
	119	20100121744	A1	2010-05-13	Belz et al.	
	120	20100131584		2010-05-27	Johnson, William J.	
	121	20100142478	A1	2010-06-10	Forssell et al.	
	122	20100144310		2010-06-10	BEDINGFIELD, James Carlton	
	123	20100151866	A1	2010-06-17	Karpov et al.	
	124	20100153781		2010-06-17	HANNA, Stephen R.	
	125	20100167696	A	2010-07-01	Smith, Christopher David et al.	
	126	20100188975		2010-07-29	RALEIGH, Gregory G.	
	127	20100188990		2010-07-29	RALEIGH, Gregory G.	
	128	20100188992		2010-07-29	RALEIGH, Gregory G.	

INFORMATION DISCLOSURE STATEMENT BY APPLICANT (Not for submission under 37 CFR 1.99)		
	Application Number	16907887
	Filing Date	2020-06-22
	First Named Inventor	RALEIGH, GREGORY
	Art Unit	2434
	Examiner Name	KAPLAN, BENJAMIN
	Attorney Docket Number	RALEP025C1C1C1C1

	129	20100188994		2010-07-29	RALEIGH, Gregory G.	
	130	20100190469	A1	2010-07-29	Vanderveen et al.	
	131	20100191576		2010-07-29	RALEIGH, Gregory G.	
	132	20100191612		2010-07-29	RALEIGH, Gregory G.	
	133	20100191846		2010-07-29	RALEIGH, Gregory G.	
	134	20100192170		2010-07-29	RALEIGH, Gregory G.	
	135	20100192212		2010-07-29	RALEIGH, Gregory G.	
	136	20100195503		2010-08-05	RALEIGH, Gregory G.	
	137	20100197268		2010-08-05	RALEIGH, Gregory G.	
	138	20100198698		2010-08-05	RALEIGH et al.	
	139	20100198939		2010-08-05	RALEIGH, Gregory G.	

INFORMATION DISCLOSURE STATEMENT BY APPLICANT (Not for submission under 37 CFR 1.99)		
	Application Number	16907887
	Filing Date	2020-06-22
	First Named Inventor	RALEIGH, GREGORY
	Art Unit	2434
	Examiner Name	KAPLAN, BENJAMIN
	Attorney Docket Number	RALEP025C1C1C1C1

	140	20100235329	A	2010-09-16	Koren et al.	
	141	20100241544		2010-09-23	Benson, Dan et al.	
	142	20100248719	A1	2010-09-30	Scholaert, Hugh	
	143	20100284327	A	2010-11-11	Miklos, Gyorgy	
	144	20100284388	A1	2010-11-11	Fantini et al.	
	145	20100287599	A1	2010-11-11	He et al.	
	146	20100311402	A1	2010-12-09	Srinivasan et al.	
	147	20100325420		2010-12-23	KANEKAR, Tushar	
	148	20110004917	A1	2011-01-06	Saisa et al.	
	149	20110013569	A	2011-01-20	Scherzer, Shimon et al.	
	150	20110019574	A	2011-01-27	Malomsoky et al.	

INFORMATION DISCLOSURE STATEMENT BY APPLICANT (Not for submission under 37 CFR 1.99)		
	Application Number	16907887
	Filing Date	2020-06-22
	First Named Inventor	RALEIGH, GREGORY
	Art Unit	2434
	Examiner Name	KAPLAN, BENJAMIN
	Attorney Docket Number	RALEP025C1C1C1C1

	151	20110081881	A	2011-04-07	Baker, Matthew Donald et al.	
	152	20110082790	A	2011-04-07	Baker, Matthew Donald et al.	
	153	20110110309	A	2011-05-12	Bennett, James D.	
	154	20110126141		2011-05-26	KING et al.	
	155	20110145920	A1	2011-06-16	Mahaffey et al.	
	156	20110159818	A	2011-06-30	Scherzer, Shimon et al.	
	157	20110173678		2011-07-14	KAIPPALLIMALIL, John et al.	
	158	20110177811	A1	2011-07-21	Heckman et al.	
	159	20110182220	A1	2011-07-28	Black et al.	
	160	20110185202	A1	2011-07-28	Black et al.	
	161	20110244837	A1	2011-10-06	MURATA et al.	

INFORMATION DISCLOSURE STATEMENT BY APPLICANT (Not for submission under 37 CFR 1.99)		
	Application Number	16907887
	Filing Date	2020-06-22
	First Named Inventor	RALEIGH, GREGORY
	Art Unit	2434
	Examiner Name	KAPLAN, BENJAMIN
	Attorney Docket Number	RALEP025C1C1C1C1

	162	20110249668	A1	2011-10-13	Milligan et al.	
	163	20110264923	A	2011-10-27	Kocher et al.	
	164	20110277019	A1	2011-11-10	John Russell Pritchard Jr.	
	165	20120020296	A	2012-01-26	Scherzer, Shimon et al.	
	166	20120144025	A1	2012-06-07	Melander et al.	
	167	20120166364	A1	2012-06-28	Ahmad et al.	
	168	20120196644	A	2012-08-02	Scherzer, Shimon et al.	
	169	20120238287	A	2012-09-20	Scherzer, Shimon	
	170	20130029653	A	2013-01-31	Baker, Matthew Donald et al.	
	171	20130058274	A	2013-03-07	Scherzer, Shimon et al.	
	172	20130065555	A	2013-03-14	Baker, Matthew Donald et al.	

INFORMATION DISCLOSURE STATEMENT BY APPLICANT (Not for submission under 37 CFR 1.99)		
	Application Number	16907887
	Filing Date	2020-06-22
	First Named Inventor	RALEIGH, GREGORY
	Art Unit	2434
	Examiner Name	KAPLAN, BENJAMIN
	Attorney Docket Number	RALEP025C1C1C1C1

	173	20130072177	A1	2013-03-21	Ross et al.	
	174	20130084835	A	2013-04-04	Scherzer, Shimon et al.	
	175	20130144789		2013-06-06	Aaltonen, Janne et al.	
	176	20130225151	A1	2013-08-29	King et al.	
	177	20130326356	A9	2013-12-05	Zheng et al.	
	178	20140073291	A1	2014-03-13	Hildner et al.	
	179	20140241342	A1	2014-08-28	Constantinof, Cristian	
	180	20150181628	A1	2015-06-25	Haverinen et al.	

If you wish to add additional U.S. Published Application citation information please click the Add button. Add

FOREIGN PATENT DOCUMENTS Remove

Examiner Initial*	Cite No	Foreign Document Number[3]	Country Code[2] i	Kind Code[4]	Publication Date	Name of Patentee or Applicant of cited Document	Pages,Columns,Lines where Relevant Passages or Relevant Figures Appear	T[5]
	1	1999027723	WO		1999-06-03	Telefonaktiebolaget LM Ericsson		

EFS Web 2.1.18

ALL REFERENCES CONSIDERED EXCEPT WHERE LINED THROUGH. /B.A.K/

INFORMATION DISCLOSURE STATEMENT BY APPLICANT (Not for submission under 37 CFR 1.99)		
	Application Number	16907887
	Filing Date	2020-06-22
	First Named Inventor	RALEIGH, GREGORY
	Art Unit	2434
	Examiner Name	KAPLAN, BENJAMIN
	Attorney Docket Number	RALEP025C1C1C1C1

	2	1999065185	WO	A3	2001-05-03	Briscoe et al.		
	3	2002045315	WO	A2	2002-06-06	Micromuse		
	4	2002067616	WO	A1	2002-08-29	Sonera Oyj		
	5	2002093877	WO	A1	2002-11-21	Nokia Corp.		
	6	2003014891	WO		2003-02-20	The Boeing Company		
	7	2003017063	WO	A2	2003-02-27	Apogee Networks		
	8	2003017065	WO	A2	2003-02-27	Apogee Networks		
	9	2003058880	WO	A1	2003-07-17	Eriksson et al.		
	10	2004028070	WO	A1	2004-04-01	Mann et al.		
	11	2004064306	WO	A2	2004-07-29	Wild et al.		
	12	2004077797	WO	A3	2008-02-07	Erskine et al.		

INFORMATION DISCLOSURE STATEMENT BY APPLICANT (Not for submission under 37 CFR 1.99)		
	Application Number	16907887
	Filing Date	2020-06-22
	First Named Inventor	RALEIGH, GREGORY
	Art Unit	2434
	Examiner Name	KAPLAN, BENJAMIN
	Attorney Docket Number	RALEP025C1C1C1C1

	13	2004095753	WO	A3	2005-01-13	Adwankar et al.		
	14	2005008995	WO		2005-01-27	Starhub Ltd.		
	15	2005053335	WO	A1	2005-06-09	Nokia Corp.		
	16	2005083934	WO	A1	2005-09-09	Research In Motion Ltd.		
	17	2006004467	WO	A1	2006-01-12	Skog et al.		
	18	2006004784	WO	A1	2006-01-12	Japan Communications Inc.		
	19	2006012610	WO	A2	2006-02-02	Citrix Systems, Inc.		
	20	2006050758	WO	A1	2006-05-18	Boman		
	21	2006073837	WO	A3	2009-04-02	D'agostino, Anthony		
	22	2006077481	WO	A1	2006-07-27	Chane et al.		
	23	2006093961	WO	A1	2006-09-08	Kyocera Wireless Corp.		

INFORMATION DISCLOSURE STATEMENT BY APPLICANT (Not for submission under 37 CFR 1.99)		
	Application Number	16907887
	Filing Date	2020-06-22
	First Named Inventor	RALEIGH, GREGORY
	Art Unit	2434
	Examiner Name	KAPLAN, BENJAMIN
	Attorney Docket Number	RALEP025C1C1C1C1

	24	2006120558	WO		2006-11-16	Nokia Corp.		
	25	2006130960	WO	A1	2006-12-14	Sharif-Ahmadi et al.		
	26	2007001833	WO	A2	2007-01-04	Linsley-Hood et al.		
	27	2007014630	WO	A1	2007-02-08	Norrman et al.		
	28	2007018363	WO	A1	2007-02-15	Son		
	29	2007053848	WO	A1	2007-05-10	Germano et al.		
	30	2007068288	WO		2007-06-21	Telefonaktiebolaget LM Ericsson		
	31	2007069245	WO	A3	2009-04-16	Touboul		
	32	2007097786	WO	A	2007-08-30	Sony Ericsson Mobile Communications AB		
	33	2007107701	WO	A2	2007-09-27	Cofta		
	34	2007120310	WO		2007-10-25	Qualcomm Inc.		

INFORMATION DISCLOSURE STATEMENT BY APPLICANT (Not for submission under 37 CFR 1.99)		
	Application Number	16907887
	Filing Date	2020-06-22
	First Named Inventor	RALEIGH, GREGORY
	Art Unit	2434
	Examiner Name	KAPLAN, BENJAMIN
	Attorney Docket Number	RALEP025C1C1C1C1

	35	2007124279	WO		2007-11-01	Cisco Technology, Inc., et al.		
	36	2007126352	WO		2007-11-08	Telefonaktiebolaget LM Ericsson		
	37	2007129180	WO	A2	2007-11-15	Nokia Corp.		
	38	2007133844	WO	A	2007-11-22	Camiant, Inc.		
	39	2008017837	WO	A1	2008-02-14	Spooner		
	40	2008051379	WO	A2	2008-05-02	Balia		
	41	2008066419	WO	A1	2008-06-05	LIDSTRÖM et al.		
	42	2008080139	WO	A1	2008-07-03	Pugh et al.		
	43	2008080430	WO	A1	2008-07-10	Costa et al.		
	44	2008099802	WO	A1	2008-08-21	Awano		
	45	2009008817	WO	A1	2009-01-15	Ericsson		

INFORMATION DISCLOSURE STATEMENT BY APPLICANT (Not for submission under 37 CFR 1.99)		
	Application Number	16907887
	Filing Date	2020-06-22
	First Named Inventor	RALEIGH, GREGORY
	Art Unit	2434
	Examiner Name	KAPLAN, BENJAMIN
	Attorney Docket Number	RALEP025C1C1C1C1

	46	2009091295	WO	A1	2009-07-23	Telefonaktiebolaget LM Ericsson		
	47	2010088413	WO	A1	2010-08-05	Raleigh		
	48	2010128391	WO	A2	2010-11-11	Bridgewater Systems Corp.		
	49	2010128391	WO	A3	2011-01-20	Momtahan et al.		
	50	2011002450	WO	A1	2011-01-06	Alcatel-Lucent USA Inc.		

If you wish to add additional Foreign Patent Document citation information please click the Add button Add

NON-PATENT LITERATURE DOCUMENTS Remove

Examiner Initials*	Cite No	Include name of the author (in CAPITAL LETTERS), title of the article (when appropriate), title of the item (book, magazine, journal, serial, symposium, catalog, etc), date, pages(s), volume-issue number(s), publisher, city and/or country where published.	T5
	1	Rivadeneyra et al., "A communication architecture to access data services through GSM," San Sebastian, Spain, 1998	
	2	Ruckus Wireless – White Paper; "Smarter Wi-Fi for Mobile Operator Infrastructures" 2010	
	3	Sabat, "The evolving mobile wireless value chain and market structure," Nov. 2002	
	4	Sadeh et al., "Understanding and Capturing People's Privacy Policies in a Mobile Social Networking Application," ISR School of Computer Science, Carnegie Mellon University, 2007	

INFORMATION DISCLOSURE STATEMENT BY APPLICANT (Not for submission under 37 CFR 1.99)		
	Application Number	16907887
	Filing Date	2020-06-22
	First Named Inventor	RALEIGH, GREGORY
	Art Unit	2434
	Examiner Name	KAPLAN, BENJAMIN
	Attorney Docket Number	RALEP025C1C1C1C1

	5	Schiller et al., "Location-Based Services," The Morgan Kaufmann Series in Data Management Systems, 2004	
	6	SHARKEY, "Coding for Life--Battery Life, That Is," May 27, 2009	
	7	STEGLICH, Stephan, "I-Centric User Interaction," November 21, 2003	
	8	Sun et al., "Towards Connectivity Management Adaptability: Context Awareness in Policy Representation and End-to-end Evaluation Algorithm," Dept. of Electrical and Information Engineering, Univ. of Oulu, Finland, 2004	
	9	VAN EIJK, et al., "GigaMobile, Agent Technology for Designing Personalized Mobile Service Brokerage," July 1, 2002	
	10	VerizonWireless.com news, "Verizon Wireless Adds to Portfolio of Cosumer-Friendly Tools With Introduction of Usage Controls, Usage Controls and Chaperone 2.0 Offer Parents Full Family Security Solution," August 18, 2008	
	11	Windows7 Power Management, published April 2009	
	12	Wireless Broadband Alliance, "WISPr 2.0, 08 April, 2010"; Doc. Ref. No.: WBA/RM/WISPr, Version 01.00	
	13	ZHU et al., "A Survey of Quality of Service in IEEE 802.11 Networks," IEEE Wireless Communications, August 2004	

If you wish to add additional non-patent literature document citation information please click the Add button Add

EXAMINER SIGNATURE

Examiner Signature	/BENJAMIN A KAPLAN/	Date Considered	06/19/2021

*EXAMINER: Initial if reference considered, whether or not citation is in conformance with MPEP 609. Draw line through a citation if not in conformance and not considered. Include copy of this form with next communication to applicant.

INFORMATION DISCLOSURE STATEMENT BY APPLICANT (Not for submission under 37 CFR 1.99)		
	Application Number	16907887
	Filing Date	2020-06-22
	First Named Inventor	RALEIGH, GREGORY
	Art Unit	2434
	Examiner Name	KAPLAN, BENJAMIN
	Attorney Docket Number	RALEP025C1C1C1C1

[1] See Kind Codes of USPTO Patent Documents at www.USPTO.GOV or MPEP 901.04. [2] Enter office that issued the document, by the two-letter code (WIPO Standard ST.3). [3] For Japanese patent documents, the indication of the year of the reign of the Emperor must precede the serial number of the patent document. [4] Kind of document by the appropriate symbols as indicated on the document under WIPO Standard ST.16 if possible. [5] Applicant is to place a check mark here if English language translation is attached.

ALL REFERENCES CONSIDERED EXCEPT WHERE LINED THROUGH. /B.A.K/

INFORMATION DISCLOSURE STATEMENT BY APPLICANT (Not for submission under 37 CFR 1.99)		
	Application Number	16907887
	Filing Date	2020-06-22
	First Named Inventor	RALEIGH, GREGORY
	Art Unit	2434
	Examiner Name	KAPLAN, BENJAMIN
	Attorney Docket Number	RALEP025C1C1C1C1

CERTIFICATION STATEMENT

Please see 37 CFR 1.97 and 1.98 to make the appropriate selection(s):

That each item of information contained in the information disclosure statement was first cited in any communication from a foreign patent office in a counterpart foreign application not more than three months prior to the filing of the information disclosure statement. See 37 CFR 1.97(e)(1).

OR

☐ That no item of information contained in the information disclosure statement was cited in a communication from a foreign patent office in a counterpart foreign application, and, to the knowledge of the person signing the certification after making reasonable inquiry, no item of information contained in the information disclosure statement was known to any individual designated in 37 CFR 1.56(c) more than three months prior to the filing of the information disclosure statement. See 37 CFR 1.97(e)(2).

See attached certification statement.

The fee set forth in 37 CFR 1.17 (p) has been submitted herewith.

X A certification statement is not submitted herewith.

SIGNATURE

A signature of the applicant or representative is required in accordance with CFR 1.33, 10.18. Please see CFR 1.4(d) for the form of the signature.

Signature	/James E. Harris/	Date (YYYY-MM-DD)	2021-02-03
Name/Print	James E. Harris	Registration Number	40013

This collection of information is required by 37 CFR 1.97 and 1.98. The information is required to obtain or retain a benefit by the public which is to file (and by the USPTO to process) an application. Confidentiality is governed by 35 U.S.C. 122 and 37 CFR 1.14. This collection is estimated to take 1 hour to complete, including gathering, preparing and submitting the completed application form to the USPTO. Time will vary depending upon the individual case. Any comments on the amount of time you require to complete this form and/or suggestions for reducing this burden, should be sent to the Chief Information Officer, U.S. Patent and Trademark Office, U.S. Department of Commerce, P.O. Box 1450, Alexandria, VA 22313-1450. DO NOT SEND FEES OR COMPLETED FORMS TO THIS ADDRESS. **SEND TO: Commissioner for Patents, P.O. Box 1450, Alexandria, VA 22313-1450.**

Privacy Act Statement

The Privacy Act of 1974 (P.L. 93-579) requires that you be given certain information in connection with your submission of the attached form related to a patent application or patent. Accordingly, pursuant to the requirements of the Act, please be advised that: (1) the general authority for the collection of this information is 35 U.S.C. 2(b)(2); (2) furnishing of the information solicited is voluntary; and (3) the principal purpose for which the information is used by the U.S. Patent and Trademark Office is to process and/or examine your submission related to a patent application or patent. If you do not furnish the requested information, the U.S. Patent and Trademark Office may not be able to process and/or examine your submission, which may result in termination of proceedings or abandonment of the application or expiration of the patent.

The information provided by you in this form will be subject to the following routine uses:

1. The information on this form will be treated confidentially to the extent allowed under the Freedom of Information Act (5 U.S.C. 552) and the Privacy Act (5 U.S.C. 552a). Records from this system of records may be disclosed to the Department of Justice to determine whether the Freedom of Information Act requires disclosure of these record s.

2. A record from this system of records may be disclosed, as a routine use, in the course of presenting evidence to a court, magistrate, or administrative tribunal, including disclosures to opposing counsel in the course of settlement negotiations.

3. A record in this system of records may be disclosed, as a routine use, to a Member of Congress submitting a request involving an individual, to whom the record pertains, when the individual has requested assistance from the Member with respect to the subject matter of the record.

4. A record in this system of records may be disclosed, as a routine use, to a contractor of the Agency having need for the information in order to perform a contract. Recipients of information shall be required to comply with the requirements of the Privacy Act of 1974, as amended, pursuant to 5 U.S.C. 552a(m).

5. A record related to an International Application filed under the Patent Cooperation Treaty in this system of records may be disclosed, as a routine use, to the International Bureau of the World Intellectual Property Organization, pursuant to the Patent Cooperation Treaty.

6. A record in this system of records may be disclosed, as a routine use, to another federal agency for purposes of National Security review (35 U.S.C. 181) and for review pursuant to the Atomic Energy Act (42 U.S.C. 218(c)).

7. A record from this system of records may be disclosed, as a routine use, to the Administrator, General Services, or his/her designee, during an inspection of records conducted by GSA as part of that agency's responsibility to recommend improvements in records management practices and programs, under authority of 44 U.S.C. 2904 and 2906. Such disclosure shall be made in accordance with the GSA regulations governing inspection of records for this purpose, and any other relevant (i.e., GSA or Commerce) directive. Such disclosure shall not be used to make determinations about individuals.

8. A record from this system of records may be disclosed, as a routine use, to the public after either publication of the application pursuant to 35 U.S.C. 122(b) or issuance of a patent pursuant to 35 U.S.C. 151. Further, a record may be disclosed, subject to the limitations of 37 CFR 1.14, as a routine use, to the public if the record was filed in an application which became abandoned or in which the proceedings were terminated and which application is referenced by either a published application, an application open to public inspections or an issued patent.

9. A record from this system of records may be disclosed, as a routine use, to a Federal, State, or local law enforcement agency, if the USPTO becomes aware of a violation or potential violation of law or regulation.

ALL REFERENCES CONSIDERED EXCEPT WHERE LINED THROUGH. /B.A.K/

EAST Search History

EAST Search History (Prior Art)

Ref #	Hits	Search Query	DBs	Default Operator	Plurals	Time Stamp
S1	1	16/034,362.app.	US-PGPUB; USPAT	AND	OFF	2019/06/24 00:14
S2	2	(("20060026679") or ("20080127304")).PN.	US-PGPUB; USPAT; USOCR	OR	OFF	2019/06/24 01:34
S3	2	12/694,445.app.	US-PGPUB; USPAT	AND	OFF	2019/06/24 01:49
S4	7,094	(726/1).CCLS.	US-PGPUB; USPAT; USOCR	OR	OFF	2019/06/24 02:06
S5	275,642	(G06Q10/06375 H04W12/0017 G06Q20/20 G06Q20/40 G06Q30/0207 G06Q30/0283 G06Q30/0284 G06Q30/04 G06Q30/0601 G06Q40/00 H04L12/14 H04L41/0893 H04L41/5003 H04M15/00 H04M15/58 H04W4/24 G06F15/177 G06Q30/0241 H04L9/32 H04L67/306 H04W28/02 H04W12/08 H04L47/2408 G06Q40/12 H04W8/20 H04W28/12 H04W48/14 H04M15/88 H04W28/0268 H04W88/08 H04M15/61 H04W24/08 H04L63/0236 H04L51/046 H04W4/12 H04W8/18 H04W72/0453 H04L47/20 H04W28/0215 G06Q10/06315 H04L41/0806 H04L41/5054 H04M15/80 H04L63/0853 H04L67/327 H04L9/3247 H04L63/0892 H04L67/145 H04W12/06 H04L67/26 H04W48/16 H04W4/50 G06Q20/102).cpc.	US-PGPUB; USPAT	OR	OFF	2019/06/24 02:07
S6	281,319	S4 or S5	US-PGPUB; USPAT	AND	OFF	2019/06/24 02:08
S7	97,958	S6 @ad<"20090213"	US-PGPUB; USPAT	AND	OFF	2019/06/24 02:08
S8	457	(Raleigh Gregory G).in.	US-PGPUB; USPAT	AND	OFF	2019/06/24 02:10
S9	216,345	secure environment @ad<"20090213"	US-PGPUB; USPAT	AND	OFF	2019/06/24 02:15
S10	28,161	secure environment service profile @ad<"20090213"	US-PGPUB; USPAT	AND	OFF	2019/06/24 02:16

S11	16,959	secure environment service profile monitor @ad<"20090213"	US-PGPUB; USPAT	AND	OFF	2019/06/24 02:16
S12	200	("20010048738" | "20010053694" | "20020013844" | "20020022472" | "20020022483" | "20020049074" | "20020099848" | "20020116338" | "20020120370" | "20020120540" | "20020131404" | "20020138599" | "20020138601" | "20020154751" | "20020161601" | "20020164983" | "20020176377" | "20020188732" | "20020191573" | "20020199001" | "20030004937" | "20030005112" | "20030013434" | "20030018524" | "20030028623" | "20030046396" | "20030050070" | "20030050837" | "20030084321" | "20030088671" | "20030133408" | "20030134650" | "20030159030" | "20030161265" | "20030171112" | "20030182420" | "20030182435" | "20030184793" | "20030188006" | "20030188117" | "20030220984" | "20030224781" | "20030229900" | "20030233332" | "20030236745" | "20040019539" | "20040019564" | "20040021697" | "20040024756" | "20040030705" | "20040039792" | "20040044623" | "20040047358" | "20040054779" | "20040073672" | "20040082346" | "20040098715" | "20040102182" | "20040103193" | "20040107360" | "20040116140" | "20040127200" | "20040127208" | "20040127256" | "20040132427" | "20040133668" | "20040137890" | "20040165596" | "20040167958" | "20040168052" | "20040170191" | "20040176104" | "20040198331" | "20040203755" | "20040203833" | "20040225561" | "20040225898" | "20040236547" | "20040243680" | "20040243992" | "20040249918" | "20040255145" | "20040259534" | "20040260766" | "20040267872" | "20050007993" | "20050009499" | "20050021995" | "20050041617" | "20050048950" | "20050055291" | "20050055309" | "20050055595" | "20050060266" | "20050060525" | "20050075115" | "20050079863" | "20050091505" | "20050096024" | "20050097516" |	US-PGPUB; USPAT	AND	OFF	2020/01/06 04:54

		"20050107091" | "20050108075" | "20050111463" | "20050128967" | "20050135264" | "20050163320" | "20050166043" | "20050183143" | "20050186948" | "20050198377" | "20050216421" | "20050228985" | "20050238046" | "20050239447" | "20050245241" | "20050246282" | "20050250508" | "20050250536" | "20050254435" | "20050266825" | "20050266880" | "20060014519" | "20060019632" | "20060020787" | "20060026679" | "20060030306" | "20060034256" | "20060035631" | "20060040642" | "20060045245" | "20060048223" | "20060068796" | "20060072451" | "20060072550" | "20060072646" | "20060075506" | "20060085543" | "20060095517" | "20060098627" | "20060099970" | "20060101507" | "20060112016" | "20060114821" | "20060114832" | "20060126562" | "20060135144" | "20060136882" | "20060143066" | "20060143098" | "20060156398" | "20060160536" | "20060165060" | "20060168128" | "20060173959" | "20060174035" | "20060178917" | "20060178918" | "20060182137" | "20060183462" | "20060190314" | "20060190987" | "20060193280" | "20060199608" | "20060200663" | "20060206709" | "20060206904" | "20060218395" | "20060233108" | "20060233166" | "20060236095" | "20060242685" | "20060258341" | "20060277590" | "20060291419" | "20060291477" | "20070005795" | "20070019670" | "20070022289" | "20070025301" | "20070033194" | "20070033197" | "20070036312" | "20070055694" | "20070060200" | "20070061243" | "20070061800" | "20070061878" | "20070073899" | "20070076616" | "20070093243" | "20070100981" | "20070101426" | "20070104126" | "20070109983" | "20070111740" | "20070130283" | "20070130315" | "20070140113" | "20070140145" | "20070140275").PN.				

S13	200	("20070143824" | "20070147317" | "20070147324" | "20070155365" | "20070165630" | "20070168499" | "20070171856" | "20070174490" | "20070191006" | "20070192460" | "20070198656" | "20070201502" | "20070213054" | "20070220251" | "20070226225" | "20070226775" | "20070234402" | "20070243862" | "20070248100" | "20070254646" | "20070254675" | "20070255769" | "20070255797" | "20070255848" | "20070257767" | "20070259656" | "20070259673" | "20070263558" | "20070266422" | "20070274327" | "20070280453" | "20070282896" | "20070293191" | "20070294395" | "20070294410" | "20070297378" | "20070298764" | "20070299965" | "20070300252" | "20080005285" | "20080005561" | "20080010379" | "20080010452" | "20080018494" | "20080022354" | "20080025230" | "20080032715" | "20080034063" | "20080034419" | "20080039102" | "20080049630" | "20080050715" | "20080051076" | "20080052387" | "20080056273" | "20080059474" | "20080059743" | "20080060066" | "20080062900" | "20080064367" | "20080066149" | "20080066150" | "20080066181" | "20080070550" | "20080077705" | "20080080457" | "20080081606" | "20080082643" | "20080083013" | "20080085707" | "20080089295" | "20080089303" | "20080095339" | "20080096559" | "20080098062" | "20080109679" | "20080120129" | "20080120668" | "20080120688" | "20080125079" | "20080126287" | "20080127304" | "20080130534" | "20080130656" | "20080132201" | "20080132268" | "20080134330" | "20080139210" | "20080147454" | "20080160958" | "20080162637" | "20080162704" | "20080164304" | "20080166993" | "20080167027" | "20080167033" | "20080168275" | "20080168523" | "20080177998" | "20080178300" | "20080183812" | "20080184127" | "20080189760" | "20080201266" | "20080207167" | "20080212470" |	US-PGPUB; USPAT	AND	OFF	2020/01/06 04:54

		"20080212751" | "20080219268" | "20080221951" | "20080222692" | "20080225748" | "20080229385" | "20080229388" | "20080235511" | "20080240373" | "20080250053" | "20080256593" | "20080259924" | "20080262798" | "20080263348" | "20080268813" | "20080270212" | "20080279216" | "20080282319" | "20080293395" | "20080298230" | "20080305793" | "20080311885" | "20080313315" | "20080313730" | "20080316923" | "20080318547" | "20080318550" | "20080319879" | "20080320497" | "20090005000" | "20090005005" | "20090006116" | "20090006200" | "20090006229" | "20090013157" | "20090016310" | "20090036111" | "20090042536" | "20090044185" | "20090046707" | "20090046723" | "20090047989" | "20090048913" | "20090049156" | "20090049518" | "20090054030" | "20090065571" | "20090067372" | "20090068984" | "20090070379" | "20090077622" | "20090079699" | "20090113514" | "20090125619" | "20090132860" | "20090149154" | "20090157792" | "20090163173" | "20090172077" | "20090180391" | "20090181662" | "20090197585" | "20090197612" | "20090203352" | "20090217364" | "20090219170" | "20090248883" | "20090254857" | "20090257379" | "20090271514" | "20090282127" | "20090286507" | "20090287921" | "20090288140" | "20090291665" | "20090299857" | "20090307696" | "20090307746" | "20090315735" | "20090320110" | "20100017506" | "20100020822" | "20100027469" | "20100027559" | "20100030890" | "20100041364" | "20100041365" | "20100042675" | "20100043068" | "20100069074" | "20100071053" | "20100075666" | "20100080202" | "20100082431").PN.				
S14	256	("20100103820" | "20100113020" | "20100121744" | "20100131584" | "20100142478" | "20100144310" | "20100151866" | "20100153781" |	US-PGPUB; USPAT	AND	OFF	2020/01/06 04:54

		"20100167696" | "20100188975" | "20100188990" | "20100188992" | "20100188994" | "20100190469" | "20100191576" | "20100191612" | "20100191846" | "20100192170" | "20100192212" | "20100195503" | "20100197268" | "20100198698" | "20100198939" | "20100235329" | "20100241544" | "20100248719" | "20100284327" | "20100284388" | "20100287599" | "20100311402" | "20100325420" | "20110004917" | "20110013569" | "20110019574" | "20110081881" | "20110082790" | "20110110309" | "20110126141" | "20110145920" | "20110159818" | "20110173678" | "20110177811" | "20110264923" | "20110277019" | "20120020296" | "20120144025" | "20120166364" | "20120196644" | "20120238287" | "20130029653" | "20130058274" | "20130065555" | "20130072177" | "20130084835" | "20130144789" | "20130326356" | "20140073291" | "20140241342" | "20150181628" | "5131020" | "5283904" | "5325532" | "5572528" | "5577100" | "5594777" | "5617539" | "5630159" | "5633484" | "5633868" | "5754953" | "5774532" | "5794142" | "5814798" | "5889477" | "5892900" | "5903845" | "5915008" | "5915226" | "5933778" | "5940472" | "5974439" | "5983270" | "6035281" | "6038452" | "6038540" | "6047268" | "6058434" | "6061571" | "6064878" | "6078953" | "6081591" | "6098878" | "6104700" | "6115823" | "6119933" | "6125391" | "6141565" | "6141686" | "6148336" | "6154738" | "6157636" | "6185576" | "6198915" | "6219786" | "6226277" | "6246870" | "6263055" | "6292828" | "6317584" | "6370139" | "6381316" | "6393014" | "6397259" | "6401113" | "6418147" | "6438575" | "6445777" | "6449479" | "6466984" | "6477670" | "6502131" | "6505114" | "6510152" | "6522629" | "6532235" | "6532579" | "6535855" | "6535949" | "6539082" | "6542500" | "6542992" | "6546016" | "6563806" | "6570974" | "6574321" | "6574465" | "6578076" | "6581092" | "6591098" | "6598034" | "6601040" |				

		"6603969" | "6603975" | "6606744" | "6628934" | "6631122" | "6636721" | "6639975" | "6640097" | "6640334" | "6650887" | "6651101" | "6654786" | "6654814" | "6658254" | "6662014" | "6678516" | "6683853" | "6684244" | "6690918" | "6697821" | "6725031" | "6725256" | "6732176" | "6735206" | "6748195" | "6748437" | "6751296" | "6754470" | "6757717" | "6760417" | "6763000" | "6763226" | "6765864" | "6765925" | "6782412" | "6785889" | "6792461" | "6829596" | "6829696" | "6839340" | "6842628" | "6873988" | "6876653" | "6879825" | "6882718" | "6885997" | "6901440" | "6920455" | "6922562" | "6928280" | "6934249" | "6934751" | "6947723" | "6947985" | "6952428" | "6957067" | "6959202" | "6959393" | "6965667" | "6965872" | "6967958" | "6970692" | "6970927" | "6982733" | "6983370" | "6996062" | "6996076" | "6996393" | "6998985" | "7002920" | "7007295" | "7013469" | "7017189" | "7024200" | "7024460" | "7027055" | "7027408" | "7031733" | "7032072" | "7039027" | "7039037" | "7039403" | "7039713" | "7042988" | "7043225" | "7043226" | "7043268" | "7047276" | "7058022" | "7058968" | "7068600" | "7069248" | "7082422" | "7084775" | "7092696" | "7095754" | "7102620" | "7110753" | "7113780" | "7113997" | "7120133" | "7133386" | "7133695" | "7136361" | "7139569" | "7142876" | "7149229" | "7149521" | "7151764" | "7158792" | "7162237" | "7165040" | "7167078" | "7174156" | "7174174").PN.				
S15	280	("7177919" | "7180855" | "7181017" | "7191248" | "7197321" | "7200112" | "7200551" | "7203169" | "7203721" | "7203752" | "7212491" | "7219123" | "7222190" | "7222304" | "7224968" | "7228354" | "7236780" | "7242668" | "7242920" | "7245901" | "7248570" | "7251218" | "7260382" | "7266371" | "7269157" | "7271765" | "7272660" | "7280816" | "7280818" | "7283561" | "7283963" | "7286834" | "7286848" | "7289489" | "7290283" | "7310424" | "7313237" | "7315892" | "7317699"	US-PGPUB; USPAT	AND	OFF	2020/01/06 04:54

| "7318111" | "7320029" | "7322044"
| "7324447" | "7325037" | "7336960"
| "7340772" | "7346410" | "7349695"
| "7353533" | "7356011" | "7356337"
| "7366497" | "7366654" | "7369848"
| "7369856" | "7373136" | "7373179"
| "7379731" | "7388950" | "7389412"
| "7391724" | "7395244" | "7401338"
| "7403763" | "7409447" | "7409569"
| "7411930" | "7418253" | "7418257"
| "7421004" | "7423971" | "7428750"
| "7433362" | "7436816" | "7440433"
| "7444669" | "7450591" | "7450927"
| "7454191" | "7457265" | "7457870"
| "7460837" | "7466652" | "7467160"
| "7472189" | "7478420" | "7486185"
| "7486658" | "7493659" | "7496652"
| "7499438" | "7499537" | "7502672"
| "7505756" | "7505795" | "7508799"
| "7512128" | "7512131" | "7515608"
| "7515926" | "7516219" | "7522549"
| "7522576" | "7526541" | "7529204"
| "7535880" | "7536695" | "7539132"
| "7539862" | "7540408" | "7545782"
| "7546460" | "7546629" | "7548875"
| "7548976" | "7551921" | "7551922"
| "7554983" | "7555757" | "7561899"
| "7562213" | "7564799" | "7565141"
| "7574509" | "7574731" | "7577431"
| "7580356" | "7580857" | "7583964"
| "7584298" | "7586871" | "7593417"
| "7593730" | "7596373" | "7599288"
| "7599714" | "7602746" | "7606918"
| "7607041" | "7609650" | "7609700"
| "7610047" | "7610057" | "7610328"
| "7610396" | "7614051" | "7616962"
| "7617516" | "7620041" | "7620065"
| "7620162" | "7620383" | "7627314"
| "7627600" | "7627767" | "7627872"
| "7633438" | "7634388" | "7636574"
| "7636626" | "7643411" | "7644151"
| "7644267" | "7644414" | "7647047"
| "7650137" | "7653394" | "7656271"
| "7657920" | "7660419" | "7661124"
| "7664494" | "7668176" | "7668612"
| "7668903" | "7668966" | "7676673"
| "7680086" | "7681226" | "7684370"
| "7685131" | "7685254" | "7685530"
| "7688792" | "7693107" | "7693720"
| "7697540" | "7710932" | "7711848"
| "7719966" | "7720206" | "7720464"
| "7720505" | "7720960" | "7721296"
| "7724716" | "7725570" | "7729326"

		| "7730123" | "7734784" | "7742406" | "7746854" | "7747240" | "7747699" | "7747730" | "7752330" | "7756056" | "7756534" | "7756757" | "7760137" | "7760711" | "7760861" | "7765294" | "7769397" | "7770785" | "7774323" | "7774412" | "7774456" | "7778176" | "7778643" | "7792257" | "7792538" | "7792708" | "7797019" | "7797060" | "7797204" | "7797401" | "7801523" | "7801783" | "7801985" | "7802724" | "7805140" | "7805522" | "7805606" | "7809351" | "7809372" | "7813746" | "7817615" | "7817983" | "7822837" | "7822849" | "7826427" | "7826607" | "7835275" | "7843831" | "7843843" | "7844034" | "7844728" | "7848768" | "7849161" | "7849170" | "7849477" | "7853255" | "7853656" | "7856226" | "7860088" | "7865182" | "7865187" | "7868778" | "7873001" | "7873344" | "7873346" | "7873540" | "7873705" | "7877090" | "7881199" | "7881697" | "7882029" | "7882247" | "7882560" | "7886047" | "7889384" | "7890084" | "7890111" | "7894431" | "7899039" | "7899438" | "7903553" | "7907970" | "7908358").PN.				
S16	280	("7911975" | "7912025" | "7912056" | "7920529" | "7921463" | "7925740" | "7925778" | "7929959" | "7929960" | "7929973" | "7930327" | "7930446" | "7930553" | "7933274" | "7936736" | "7937069" | "7937450" | "7940685" | "7940751" | "7941184" | "7944948" | "7945238" | "7945240" | "7945945" | "7948952" | "7948953" | "7948968" | "7949529" | "7953808" | "7953877" | "7957020" | "7957381" | "7957511" | "7958029" | "7962622" | "7965983" | "7966405" | "7969950" | "7970350" | "7970426" | "7974624" | "7975184" | "7978627" | "7978686" | "7979069" | "7979889" | "7979896" | "7984130" | "7984511" | "7986935" | "7987496" | "7987510" | "7990049" | "8000276" | "8000318" | "8005009" | "8005459" | "8005726" | "8005913" | "8005988" | "8010080" | "8010081" | "8010082" | "8010990" | "8015133" | "8015234" | "8019687" | "8019820" | "8019846" | "8019868" | "8019886" | "8023425"	US-PGPUB; USPAT	AND	OFF	2020/01/06 04:54

| "8024397" | "8024424" | "8027339"
| "8031601" | "8032168" | "8032409"
| "8032899" | "8036387" | "8036600"
| "8044792" | "8045973" | "8046449"
| "8050275" | "8050690" | "8050705"
| "8059530" | "8060017" | "8060463"
| "8064418" | "8064896" | "8065365"
| "8068824" | "8068829" | "8073427"
| "8073721" | "8078140" | "8078163"
| "8085808" | "8086398" | "8086497"
| "8086791" | "8090359" | "8090361"
| "8090616" | "8091087" | "8094551"
| "8095112" | "8095124" | "8095640"
| "8095666" | "8098579" | "8099077"
| "8099517" | "8102814" | "8103285"
| "8104080" | "8107953" | "8108520"
| "8108680" | "8112435" | "8116223"
| "8116749" | "8116781" | "8122128"
| "8122249" | "8125897" | "8126123"
| "8126396" | "8126476" | "8126722"
| "8130793" | "8131256" | "8131281"
| "8131840" | "8131858" | "8132256"
| "8134954" | "8135388" | "8135392"
| "8135657" | "8140690" | "8144591"
| "8145194" | "8146142" | "8149748"
| "8149823" | "8150394" | "8150431"
| "8151205" | "8155155" | "8155620"
| "8155666" | "8155670" | "8156206"
| "8159520" | "8160015" | "8160056"
| "8160598" | "8165576" | "8166040"
| "8166554" | "8170553" | "8174378"
| "8174970" | "8175574" | "8180333"
| "8180881" | "8180886" | "8184530"
| "8184590" | "8185088" | "8185093"
| "8185127" | "8185152" | "8185158"
| "8190087" | "8190122" | "8190675"
| "8191106" | "8191116" | "8191124"
| "8194549" | "8194553" | "8194572"
| "8194581" | "8195093" | "8195153"
| "8195163" | "8195661" | "8196199"
| "8200163" | "8200200" | "8200509"
| "8200775" | "8200818" | "8204190"
| "8204505" | "8208788" | "8208919"
| "8213296" | "8213363" | "8214536"
| "8214890" | "8219134" | "8223655"
| "8223741" | "8224382" | "8224773"
| "8228818" | "8229394" | "8229914"
| "8233433" | "8233883" | "8233895"
| "8234583" | "8238287" | "8238913"
| "8239520" | "8242959" | "8244241"
| "8249601" | "8254880" | "8254915"
| "8255515" | "8255534" | "8255689"
| "8259692" | "8264965" | "8265004"

		| "8266249" | "8266681" | "8270955" | "8270972" | "8271025" | "8271045" | "8271049" | "8271992" | "8275415" | "8275830" | "8279067" | "8279864" | "8280354" | "8284740" | "8285249" | "8285992" | "8290820" | "8291238" | "8291439" | "8296404" | "8300575" | "8306518" | "8306741" | "8307067" | "8310943" | "8315198" | "8315593" | "8315594" | "8315718" | "8315999" | "8320244" | "8320949" | "8325638" | "8325906" | "8326319" | "8326828" | "8331223" | "8331293" | "8332375" | "8339991" | "8340625" | "8340628" | "8340678" | "8340718" | "8346210" | "8346923" | "8347104" | "8347362" | "8347378").PN.				
S17	231	("8350700" | "8351592" | "8351898" | "8352360" | "8352980" | "8353001" | "8355570" | "8355696" | "8356336" | "8358638" | "8358975" | "8363658" | "8363799" | "8364089" | "8364806" | "8369274" | "8370477" | "8370483" | "8374090" | "8374592" | "8375128" | "8375136" | "8380247" | "8385199" | "8385896" | "8385964" | "8385975" | "8386386" | "8391262" | "8392982" | "8396458" | "8396929" | "8401968" | "8402165" | "8402540" | "8406427" | "8406736" | "8407763" | "8411587" | "8411691" | "8412798" | "8413245" | "8418168" | "8422988" | "8423016" | "8429403" | "8437734" | "8442015" | "8446831" | "8447324" | "8447607" | "8447980" | "8448015" | "8452858" | "8461958" | "8463194" | "8463232" | "8468337" | "8472371" | "8477778" | "8483135" | "8483694" | "8484327" | "8488597" | "8489110" | "8489720" | "8494559" | "8495181" | "8495227" | "8495360" | "8495700" | "8495743" | "8499087" | "8500533" | "8503358" | "8503455" | "8504032" | "8504574" | "8504687" | "8504690" | "8504729" | "8505073" | "8509082" | "8514927" | "8516552" | "8520589" | "8520595" | "8521110" | "8521775" | "8522039" | "8522249" | "8522337" | "8523547" | "8526329" | "8526350" | "8527410" | "8527662" | "8528068" | "8531954" | "8531995" | "8532610" | "8533775" | "8535160" | "8538394" | "8538421"	US-PGPUB; USPAT	AND	OFF	2020/01/06 04:54

		| "8538458" | "8539544" | "8543265" | "8543814" | "8544105" | "8548427" | "8549173" | "8554876" | "8559369" | "8561138" | "8565746" | "8566236" | "8571474" | "8571501" | "8571598" | "8571993" | "8572117" | "8572256" | "8583499" | "8588240" | "8589955" | "8594665" | "8595186" | "8600895" | "8601125" | "8605691" | "8615507" | "8619735" | "8620257" | "8631428" | "8634425" | "8635164" | "8639215" | "8644702" | "8644813" | "8645518" | "8655357" | "8656472" | "8660853" | "8666395" | "8667542" | "8670334" | "8675852" | "8676682" | "8676925" | "8693323" | "8694772" | "8700729" | "8701015" | "8705361" | "8706863" | "8713535" | "8713641" | "8719397" | "8719423" | "8724486" | "8725899" | "8730842" | "8731519" | "8732808" | "8739035" | "8744339" | "8761711" | "8780857" | "8787249" | "8793304" | "8804695" | "8811338" | "8811991" | "8818394" | "8819253" | "8825109" | "8826411" | "8831561" | "8838752" | "8843849" | "8845415" | "8849297" | "8855620" | "8862751" | "8863111" | "8875042" | "8880047" | "8891483" | "8898748" | "8908516" | "8929374" | "8930238" | "8943551" | "8948726" | "8949382" | "8949597" | "8955038" | "8966018" | "8971912" | "8977284" | "8995952" | "9002342" | "9014973" | "9015331" | "9030934" | "9049010" | "9064275" | "9105031" | "9111088" | "9137286" | "9172553" | "9177455" | "9282460" | "9286469" | "9286604" | "9313708" | "9325737" | "9326173" | "9344557" | "9363285" | "9367680" | "9413546" | "9418381" | "9459767" | "9501803" | "9544397" | "9589117" | "9609459" | "9986413" | "RE44412").PN.				
S18	478	(Raleigh Gregory G).in.	US-PGPUB; USPAT	AND	OFF	2020/01/06 04:57
S19	395,690	(G06Q40/12 H04M15/00 H04L12/14 H04L41/5054 H04L47/20 H04M15/88 H04W12/0017 G06Q10/06315 G06Q30/0601 H04L67/145 H04W8/18 H04W72/0453 H04L9/3247 H04L63/08 H04W8/20 H04M15/58 H04M15/61 H04W88/08	US-PGPUB; USPAT	OR	OFF	2020/01/06 05:48

		H04L9/32 H04L41/0893 H04L67/306 G06Q10/06375 H04L67/327 H04W4/50 H04W12/02 H04W24/08 H04W28/02 H04W4/02 H04W4/18 H04W28/0215 H04L67/26 H04W12/08 H04W48/14 G06Q40/00 H04L41/5003 H04L63/0892 H04W4/12 G06Q30/0283 H04M15/80 G06Q20/102 G06Q30/0241 H04L63/0853 H04W4/20 H04W28/12 H04W48/16 H04W12/00 G06F15/177 G06Q30/04 H04L63/0428 H04L47/2408 H04L63/0236 H04W12/06 H04W28/0268 G06Q20/20 H04L41/0806 H04L51/046 H04L63/04 H04W4/24 G06Q30/0207 G06Q30/0284 H04L63/10 H04L63/20 G06Q20/40 H04W84/04 H04L67/2819 H04W88/06 Y02P90/86 H04L41/0876 H04L67/34 H04W84/042 H04W8/02 H04L41/5025 H04M2215/0188 H04W84/12).cpc.				
S20	127,192	S19 @ad<"20090213"	US-PGPUB; USPAT	AND	OFF	2020/01/06 05:48
S21	8,602	secure environment service profile modem control link @ad<"20090213"	US-PGPUB; USPAT	AND	OFF	2020/01/06 06:17
S22	91	secure environment service profile modem adj control link @ad<"20090213"	US-PGPUB; USPAT	AND	OFF	2020/01/06 06:17
S26	1	16/907,887.app.	US-PGPUB; USPAT	AND	OFF	2021/06/19 19:19
S27	1,399,069	(G06F15/177 G06Q10/06315 G06Q10/06375 G06Q20/102 G06Q20/20 G06Q20/32 G06Q20/40 G06Q30/0207 G06Q30/0241 G06Q30/0283 G06Q30/0284 G06Q30/04 G06Q30/0601 G06Q40/00 G06Q40/12 H04L12/14 H04L12/1407 H04L41/0806 H04L41/0876 H04L41/0893 H04L41/5003 H04L41/5025 H04L41/5054 H04L47/20 H04L47/2408 H04L51/046 H04L63/0236 H04L63/04 H04L63/0428 H04L63/08 H04L63/0853 H04L63/0892 H04L63/10 H04L63/20 H04L67/145 H04L67/26 H04L67/2819 H04L67/306 H04L67/327 H04L67/34 H04L9/32 H04L9/3247 H04M15/00 H04M15/49	US-PGPUB; USPAT; USOCR; FPRS; EPO; JPO; DERWENT; IBM_TDB	OR	OFF	2021/06/19 20:06

		H04M15/58 H04M15/61 H04M15/66 H04M15/80 H04M15/8055 H04M15/88 H04M2215/0188 H04W12/00 H04W12/02 H04W12/037 H04W12/06 H04W12/08 H04W24/08 H04W28/02 H04W28/0215 H04W28/0268 H04W28/12 H04W4/02 H04W4/12 H04W4/18 H04W4/20 H04W4/24 H04W4/50 H04W48/14 H04W48/16 H04W72/0453 H04W8/02 H04W8/18 H04W8/20 H04W84/04 H04W84/042 H04W84/12 H04W88/06 H04W88/08 Y02P90/80).cpc.				
S28	11,927	(726/1).CCLS.	US-PGPUB; USPAT; USOCR; FPRS; EPO; JPO; DERWENT; IBM_TDB	OR	OFF	2021/06/19 20:06
S29	1,404,578	S27 S28	US-PGPUB; USPAT; USOCR; FPRS; EPO; JPO; DERWENT; IBM_TDB	OR	OFF	2021/06/19 20:07
S30	8,608	secure environment service profile modem control link @ad<"20090213"	US-PGPUB; USPAT; USOCR; FPRS; EPO; JPO; DERWENT; IBM_TDB	AND	OFF	2021/06/19 20:09
S31	3,387	S29 S30	US-PGPUB; USPAT; USOCR; FPRS; EPO; JPO; DERWENT; IBM_TDB	AND	OFF	2021/06/19 20:09
S32	2,265	secure service measurement environment profile modem control link @ad<"20090213"	US-PGPUB; USPAT; USOCR; FPRS; EPO; JPO; DERWENT; IBM_TDB	AND	OFF	2021/06/19 20:10

S33	2	16/034,362.app.	US-PGPUB; USPAT	AND	OFF	2021/06/19 20:13
S34	88	(Headwater Research).as.	US-PGPUB; USPAT; USOCR; FPRS; EPO; JPO; DERWENT; IBM_TDB	AND	OFF	2021/06/19 20:18
S35	1,035	(Raleigh Gregory G).in.	US-PGPUB; USPAT; USOCR; FPRS; EPO; JPO; DERWENT; IBM_TDB	AND	OFF	2021/06/19 20:18
S36	201	("10285025" | "10326800" | "10492102" | "10582375" | "20010048738" | "20010053694" | "20020013844" | "20020022472" | "20020022483" | "20020049074" | "20020099848" | "20020116338" | "20020120370" | "20020120540" | "20020131404" | "20020138599" | "20020138601" | "20020154751" | "20020161601" | "20020164983" | "20020176377" | "20020188732" | "20020191573" | "20020199001" | "20030004937" | "20030005112" | "20030013434" | "20030018524" | "20030028623" | "20030046396" | "20030050070" | "20030050837" | "20030084321" | "20030088671" | "20030133408" | "20030134650" | "20030159030" | "20030161265" | "20030171112" | "20030182420" | "20030182435" | "20030184793" | "20030188006" | "20030188117" | "20030220984" | "20030224781" | "20030229900" | "20030233332" | "20030236745" | "20040019539" | "20040019564" | "20040021697" | "20040024756" | "20040030705" | "20040039792" | "20040044623" | "20040047358" | "20040054779" | "20040073672" | "20040082346" | "20040098715" | "20040102182" | "20040103193" | "20040107360" | "20040116140" | "20040127200" | "20040127208" | "20040127256" | "20040132427" | "20040133668" |	US-PGPUB; USPAT	AND	ON	2021/06/19 20:20

		"20040137890" | "20040165596" | "20040167958" | "20040168052" | "20040170191" | "20040176104" | "20040198331" | "20040203755" | "20040203833" | "20040225561" | "20040225898" | "20040236547" | "20040243680" | "20040243992" | "20040249918" | "20040255145" | "20040259534" | "20040260766" | "20040267872" | "20050007993" | "20050009499" | "20050021995" | "20050041617" | "20050048950" | "20050055291" | "20050055309" | "20050055595" | "20050060266" | "20050060525" | "20050075115" | "20050079863" | "20050091505" | "20050096024" | "20050097516" | "20050107091" | "20050108075" | "20050111463" | "20050128967" | "20050135264" | "20050163320" | "20050166043" | "20050183143" | "20050186948" | "20050198377" | "20050216421" | "20050228985" | "20050238046" | "20050239447" | "20050245241" | "20050246282" | "20050250508" | "20050250536" | "20050254435" | "20050266825" | "20050266880" | "20060014519" | "20060019632" | "20060020787" | "20060026679" | "20060030306" | "20060034256" | "20060035631" | "20060040642" | "20060045245" | "20060048223" | "20060068796" | "20060072451" | "20060072550" | "20060072646" | "20060075506" | "20060085543" | "20060095517" | "20060098627" | "20060099970" | "20060101507" | "20060112016" | "20060114821" | "20060114832" | "20060126562" | "20060135144" | "20060136882" | "20060143066" | "20060143098" | "20060156398" | "20060160536" | "20060165060" | "20060168128" | "20060173959" | "20060174035" | "20060178917" | "20060178918" | "20060182137" | "20060183462" | "20060190314" | "20060190987" | "20060193280" | "20060199608" | "20060200663" | "20060206709" | "20060206904" | "20060218395" | "20060233108" | "20060233166" | "20060236095" | "20060242685" | "20060258341" |				

		"20060274706" | "20060277590" | "20060291419" | "20060291477" | "20070005795" | "20070019670" | "20070022289" | "20070025301" | "20070033194" | "20070033197" | "20070035390" | "20070036312" | "20070055694" | "20070060200" | "20070061243" | "20070061800" | "20070061878" | "20070073899" | "20070076616" | "20070093243" | "20070100981" | "20070101426" | "20070104126" | "20070104169" | "20070109983").PN.				
S37	200	("20070111740" | "20070130283" | "20070130315" | "20070140113" | "20070140145" | "20070140275" | "20070143824" | "20070147317" | "20070147324" | "20070155365" | "20070165630" | "20070168499" | "20070171856" | "20070174490" | "20070191006" | "20070192460" | "20070198656" | "20070201502" | "20070213054" | "20070220251" | "20070226225" | "20070226775" | "20070234402" | "20070243862" | "20070248100" | "20070254646" | "20070254675" | "20070255769" | "20070255797" | "20070255848" | "20070257767" | "20070259656" | "20070259673" | "20070263558" | "20070266422" | "20070274327" | "20070280453" | "20070282896" | "20070293191" | "20070294395" | "20070294410" | "20070297378" | "20070298764" | "20070299965" | "20070300252" | "20080005285" | "20080005561" | "20080010379" | "20080010452" | "20080018494" | "20080022354" | "20080025230" | "20080032715" | "20080034063" | "20080034419" | "20080039102" | "20080049630" | "20080050715" | "20080051076" | "20080052387" | "20080056273" | "20080059474" | "20080059743" | "20080060066" | "20080062900" | "20080064367" | "20080066149" | "20080066150" | "20080066181" | "20080070550" | "20080077705" | "20080080457" | "20080081606" | "20080082643" | "20080083013" | "20080085707" | "20080089295" | "20080089303" |	US-PGPUB; USPAT	AND	ON	2021/06/19 20:20

		"20080095339" | "20080096559" | "20080098062" | "20080109679" | "20080120129" | "20080120668" | "20080120688" | "20080125079" | "20080126287" | "20080127304" | "20080130534" | "20080130656" | "20080132201" | "20080132268" | "20080134330" | "20080139210" | "20080147454" | "20080160958" | "20080162637" | "20080162704" | "20080164304" | "20080166993" | "20080167027" | "20080167033" | "20080168275" | "20080168523" | "20080177998" | "20080178300" | "20080181117" | "20080183812" | "20080184127" | "20080189760" | "20080201266" | "20080207167" | "20080212470" | "20080212751" | "20080219268" | "20080221951" | "20080222692" | "20080225748" | "20080229385" | "20080229388" | "20080235511" | "20080240373" | "20080250053" | "20080256593" | "20080259924" | "20080262798" | "20080263348" | "20080268813" | "20080270212" | "20080279216" | "20080282319" | "20080291872" | "20080293395" | "20080298230" | "20080305793" | "20080311885" | "20080313315" | "20080313730" | "20080316923" | "20080318547" | "20080318550" | "20080319879" | "20080320497" | "20090005000" | "20090005005" | "20090006116" | "20090006200" | "20090006229" | "20090013157" | "20090016310" | "20090017809" | "20090036111" | "20090042536" | "20090044185" | "20090046707" | "20090046723" | "20090047989" | "20090048913" | "20090049156" | "20090049518" | "20090054030" | "20090065571" | "20090067372" | "20090068984" | "20090070379" | "20090077622" | "20090079699" | "20090113514" | "20090125619" | "20090132860" | "20090149154" | "20090157792" | "20090163173" | "20090172077" | "20090180391" | "20090181662" | "20090197585" | "20090197612" | "20090203352" | "20090217065" | "20090217364" | "20090219170" | "20090248883" | "20090254857" |				

		"20090257379" | "20090262715" | "20090271514" | "20090282127" | "20090286507" | "20090287921" | "20090288140" | "20090291665" | "20090299857" | "20090307696" | "20090307746" | "20090315735" | "20090320110" | "20100017506" | "20100020822" | "20100027469").PN.				
S38	249	("20100027559" | "20100030890" | "20100041364" | "20100041365" | "20100041391" | "20100042675" | "20100043068" | "20100069074" | "20100071053" | "20100075666" | "20100077035" | "20100080202" | "20100082431" | "20100088387" | "20100103820" | "20100113020" | "20100121744" | "20100131584" | "20100142478" | "20100144310" | "20100151866" | "20100153781" | "20100167696" | "20100188975" | "20100188990" | "20100188992" | "20100188994" | "20100190469" | "20100191576" | "20100191612" | "20100191846" | "20100192170" | "20100192212" | "20100195503" | "20100197268" | "20100198698" | "20100198939" | "20100235329" | "20100241544" | "20100248719" | "20100284327" | "20100284388" | "20100287599" | "20100311402" | "20100325420" | "20110004917" | "20110013569" | "20110019574" | "20110081881" | "20110082790" | "20110110309" | "20110126141" | "20110145920" | "20110159818" | "20110173678" | "20110177811" | "20110182220" | "20110185202" | "20110244837" | "20110249668" | "20110264923" | "20110277019" | "20120020296" | "20120144025" | "20120166364" | "20120196644" | "20120238287" | "20130029653" | "20130058274" | "20130065555" | "20130072177" | "20130084835" | "20130144789" | "20130225151" | "20130326356" | "20140073291" | "20140241342" | "20150181628" | "5131020" | "5283904" | "5325532" | "5572528" | "5577100" | "5594777" | "5617539" | "5630159" | "5633484" | "5633868" | "5754953" | "5774532" |	US-PGPUB; USPAT	AND	ON	2021/06/19 20:20

		"5794142"	"5814798"	"5889477"				
		"5892900"	"5903845"	"5915008"				
		"5915226"	"5933778"	"5940472"				
		"5974439"	"5983270"	"6035281"				
		"6038452"	"6038540"	"6047268"				
		"6058434"	"6061571"	"6064878"				
		"6078953"	"6081591"	"6098878"				
		"6104700"	"6115823"	"6119933"				
		"6125391"	"6141565"	"6141686"				
		"6148336"	"6154738"	"6157636"				
		"6185576"	"6198915"	"6219786"				
		"6226277"	"6246870"	"6263055"				
		"6292828"	"6317584"	"6370139"				
		"6381316"	"6393014"	"6397259"				
		"6401113"	"6418147"	"6438575"				
		"6445777"	"6449479"	"6466984"				
		"6477670"	"6502131"	"6505114"				
		"6510152"	"6522629"	"6532235"				
		"6532579"	"6535855"	"6535949"				
		"6539082"	"6542500"	"6542992"				
		"6546016"	"6563806"	"6570974"				
		"6574321"	"6574465"	"6578076"				
		"6581092"	"6591098"	"6598034"				
		"6601040"	"6603969"	"6603975"				
		"6606744"	"6628934"	"6631122"				
		"6636721"	"6639975"	"6640097"				
		"6640334"	"6650887"	"6651101"				
		"6654786"	"6654814"	"6658254"				
		"6662014"	"6678516"	"6683853"				
		"6684244"	"6690918"	"6694362"				
		"6697821"	"6725031"	"6725256"				
		"6732176"	"6735206"	"6748195"				
		"6748437"	"6751296"	"6754470"				
		"6757717"	"6760417"	"6763000"				
		"6763226"	"6765864"	"6765925"				
		"6782412"	"6785889"	"6792461"				
		"6829596"	"6829696"	"6839340"				
		"6842628"	"6873988"	"6876653"				
		"6879825"	"6882718"	"6885997"				
		"6901440"	"6920455"	"6922562"				
		"6928280"	"6934249"	"6934751"				
		"6947723"	"6947985"	"6952428"				
		"6957067"	"6959202"	"6959393"				
		"6965667"	"6965872"	"6967958"				
		"6970692"	"6970927"	"6982733"				
		"6983370"	"6996062"	"6996076"				
		"6996393"	"6998985"	"7002920"				
		"7007295"	"7013469"	"7017189"				
		"7024200"	"7024460"	"7027055"				
		"7027408"	"7031733"	"7032072"				
		"7039027"	"7039037"	"7039403"				
		"7039713"	"7042988"	"7043225"				

		"7043226" | "7043268" | "7047276").PN.				
S39	280	("7058022" | "7058968" | "7068600" | "7069248" | "7082422" | "7084775" | "7092696" | "7095754" | "7102620" | "7110753" | "7113780" | "7113997" | "7120133" | "7133386" | "7133695" | "7136361" | "7139569" | "7142876" | "7149229" | "7149521" | "7151764" | "7158792" | "7162237" | "7165040" | "7167078" | "7174156" | "7174174" | "7177919" | "7180855" | "7181017" | "7191248" | "7197321" | "7200112" | "7200551" | "7203169" | "7203721" | "7203752" | "7212491" | "7219123" | "7222190" | "7222304" | "7224968" | "7228354" | "7236780" | "7242668" | "7242920" | "7245901" | "7248570" | "7251218" | "7260382" | "7266371" | "7269157" | "7271765" | "7272660" | "7280816" | "7280818" | "7283561" | "7283963" | "7286834" | "7286848" | "7289489" | "7290283" | "7310424" | "7313237" | "7315892" | "7317699" | "7318111" | "7320029" | "7322044" | "7324447" | "7325037" | "7336960" | "7340772" | "7346410" | "7349695" | "7353533" | "7356011" | "7356337" | "7366497" | "7366654" | "7366934" | "7369848" | "7369856" | "7373136" | "7373179" | "7379731" | "7388950" | "7389412" | "7391724" | "7395056" | "7395244" | "7401338" | "7403763" | "7409447" | "7409569" | "7411930" | "7418253" | "7418257" | "7421004" | "7423971" | "7428750" | "7433362" | "7436816" | "7440433" | "7444669" | "7450591" | "7450927" | "7454191" | "7457265" | "7457870" | "7460837" | "7466652" | "7467160" | "7472189" | "7478420" | "7486185" | "7486658" | "7493659" | "7496652" | "7499438" | "7499537" | "7502672" | "7505756" | "7505795" | "7508799" | "7512128" | "7512131" | "7515608" | "7515926" | "7516219" | "7522549" | "7522576" | "7526541" | "7529204" | "7535880" | "7536695" | "7539132" | "7539862" | "7540408" | "7545782" | "7546460" | "7546629" | "7548875" | "7548976" | "7551921" | "7551922" | "7554983" | "7555757" | "7561899" | "7562213"	US-PGPUB; USPAT	AND	ON	2021/06/19 20:20

		| "7564799" | "7565141" | "7574509" | "7574731" | "7577431" | "7580356" | "7580857" | "7583964" | "7584298" | "7585217" | "7586871" | "7593417" | "7593730" | "7596373" | "7599288" | "7599714" | "7602746" | "7606918" | "7607041" | "7609650" | "7609700" | "7610047" | "7610057" | "7610328" | "7610396" | "7614051" | "7616962" | "7617516" | "7620041" | "7620065" | "7620162" | "7620383" | "7627314" | "7627600" | "7627767" | "7627872" | "7633438" | "7634388" | "7636574" | "7636626" | "7643411" | "7644151" | "7644267" | "7644414" | "7647047" | "7650137" | "7653394" | "7656271" | "7657920" | "7660419" | "7661124" | "7664494" | "7668176" | "7668612" | "7668903" | "7668966" | "7676673" | "7680086" | "7681226" | "7684370" | "7685131" | "7685254" | "7685530" | "7688792" | "7693107" | "7693720" | "7697540" | "7710932" | "7711848" | "7719966" | "7720206" | "7720464" | "7720505" | "7720960" | "7721296" | "7724716" | "7725570" | "7729326" | "7730123" | "7734784" | "7742406" | "7746854" | "7747240" | "7747699" | "7747730" | "7752330" | "7756056" | "7756534" | "7756757" | "7760137" | "7760711" | "7760861" | "7765294" | "7769397" | "7770785" | "7774323" | "7774412" | "7774456" | "7778176" | "7778643" | "7792257" | "7792538" | "7792708" | "7797019" | "7797060" | "7797204" | "7797401" | "7801523" | "7801783" | "7801985" | "7802724" | "7805140" | "7805522" | "7805606" | "7809351" | "7809372" | "7813746" | "7817615" | "7817983" | "7822837" | "7822849" | "7826427" | "7826607" | "7835275" | "7843831" | "7843843" | "7844034" | "7844728" | "7848768" | "7849161").PN.				
S40	280	("7849170" | "7849477" | "7853255" | "7853656" | "7856226" | "7860088" | "7865182" | "7865187" | "7868778" | "7873001" | "7873344" | "7873346" | "7873540" | "7873705" | "7877090" | "7881199" | "7881697" | "7882029" | "7882247" | "7882560" | "7886047" | "7889384" | "7890084" | "7890111"	US-PGPUB; USPAT	AND	ON	2021/06/19 20:20

| "7894431" | "7899039" | "7899438"
| "7903553" | "7907970" | "7908358"
| "7911975" | "7912025" | "7912056"
| "7920529" | "7921463" | "7925740"
| "7925778" | "7929959" | "7929960"
| "7929973" | "7930327" | "7930446"
| "7930553" | "7933274" | "7936736"
| "7937069" | "7937450" | "7940685"
| "7940751" | "7941184" | "7944948"
| "7945238" | "7945240" | "7945945"
| "7948952" | "7948953" | "7948968"
| "7949529" | "7953808" | "7953877"
| "7957020" | "7957381" | "7957511"
| "7958029" | "7962622" | "7965983"
| "7966405" | "7969950" | "7970350"
| "7970426" | "7974624" | "7975184"
| "7978627" | "7978686" | "7979069"
| "7979889" | "7979896" | "7984130"
| "7984511" | "7986935" | "7987496"
| "7987510" | "7990049" | "8000276"
| "8000318" | "8005009" | "8005459"
| "8005726" | "8005913" | "8005988"
| "8010080" | "8010081" | "8010082"
| "8010990" | "8015133" | "8015234"
| "8015249" | "8019687" | "8019820"
| "8019846" | "8019868" | "8019886"
| "8023425" | "8024397" | "8024424"
| "8027339" | "8031601" | "8032168"
| "8032409" | "8032899" | "8036387"
| "8036600" | "8044792" | "8045973"
| "8046449" | "8050275" | "8050690"
| "8050705" | "8059530" | "8060017"
| "8060463" | "8060603" | "8064418"
| "8064896" | "8065365" | "8068824"
| "8068829" | "8073427" | "8073721"
| "8078140" | "8078163" | "8085808"
| "8086398" | "8086497" | "8086791"
| "8090359" | "8090361" | "8090616"
| "8091087" | "8094551" | "8095112"
| "8095124" | "8095640" | "8095666"
| "8098579" | "8099077" | "8099517"
| "8102814" | "8103285" | "8104080"
| "8107953" | "8108520" | "8108680"
| "8112435" | "8116223" | "8116749"
| "8116781" | "8122128" | "8122249"
| "8125897" | "8126123" | "8126396"
| "8126476" | "8126722" | "8130793"
| "8131256" | "8131281" | "8131840"
| "8131858" | "8132256" | "8134954"
| "8135388" | "8135392" | "8135657"
| "8140690" | "8144591" | "8145194"
| "8146142" | "8149748" | "8149823"
| "8150394" | "8150431" | "8151205"

		| "8155155" | "8155620" | "8155666" | "8155670" | "8156206" | "8159520" | "8160015" | "8160056" | "8160598" | "8165576" | "8166040" | "8166554" | "8170553" | "8174378" | "8174970" | "8175574" | "8180333" | "8180881" | "8180886" | "8184530" | "8184590" | "8185088" | "8185093" | "8185127" | "8185152" | "8185158" | "8190087" | "8190122" | "8190675" | "8191106" | "8191116" | "8191124" | "8194549" | "8194553" | "8194572" | "8194581" | "8195093" | "8195153" | "8195163" | "8195661" | "8196199" | "8200163" | "8200200" | "8200509" | "8200775" | "8200818" | "8204190" | "8204505" | "8208788" | "8208919" | "8213296" | "8213363" | "8214536" | "8214890" | "8219134" | "8223655" | "8223741" | "8224382" | "8224773" | "8228818" | "8229394" | "8229914" | "8233433" | "8233883" | "8233895" | "8234583" | "8238287" | "8238913" | "8239520" | "8242959" | "8244241" | "8249601" | "8254880" | "8254915" | "8255515" | "8255534" | "8255689" | "8259692" | "8260252" | "8264965" | "8265004" | "8266249" | "8266681" | "8270955" | "8270972" | "8271025" | "8271045" | "8271049" | "8271992" | "8275415" | "8275830" | "8279067" | "8279864" | "8280354" | "8284740" | "8285249" | "8285992").PN.				
S41	279	("8290820" | "8291238" | "8291439" | "8296404" | "8300575" | "8306518" | "8306741" | "8307067" | "8310943" | "8315198" | "8315593" | "8315594" | "8315718" | "8315999" | "8320244" | "8320949" | "8325638" | "8325906" | "8326319" | "8326828" | "8331223" | "8331293" | "8332375" | "8339991" | "8340625" | "8340628" | "8340678" | "8340718" | "8346210" | "8346225" | "8346923" | "8347104" | "8347362" | "8347378" | "8350700" | "8351592" | "8351898" | "8352360" | "8352980" | "8353001" | "8355570" | "8355696" | "8356336" | "8358638" | "8358975" | "8363658" | "8363799" | "8364089" | "8364806" | "8369274" | "8370477" | "8370483" | "8374090" | "8374592" | "8375128" | "8375136" | "8380247"	US-PGPUB; USPAT	AND	ON	2021/06/19 20:20

| "8385199" | "8385896" | "8385964"
| "8385975" | "8386386" | "8391262"
| "8391834" | "8392982" | "8396458"
| "8396929" | "8401968" | "8402165"
| "8402540" | "8406427" | "8406736"
| "8407763" | "8411587" | "8411691"
| "8412798" | "8413245" | "8418168"
| "8422988" | "8423016" | "8429403"
| "8437734" | "8442015" | "8446831"
| "8447324" | "8447607" | "8447980"
| "8448015" | "8452858" | "8457603"
| "8461958" | "8463194" | "8463232"
| "8468337" | "8472371" | "8477778"
| "8478840" | "8483057" | "8483135"
| "8483694" | "8484327" | "8488597"
| "8489110" | "8489720" | "8494559"
| "8495181" | "8495207" | "8495227"
| "8495360" | "8495700" | "8495743"
| "8499087" | "8500533" | "8503358"
| "8503455" | "8504032" | "8504574"
| "8504687" | "8504690" | "8504729"
| "8505073" | "8509082" | "8514927"
| "8516552" | "8520589" | "8520595"
| "8521110" | "8521775" | "8522039"
| "8522249" | "8522337" | "8523547"
| "8526329" | "8526350" | "8527013"
| "8527410" | "8527662" | "8528068"
| "8531954" | "8531995" | "8532610"
| "8533775" | "8535160" | "8538394"
| "8538421" | "8538458" | "8539544"
| "8543265" | "8543814" | "8544105"
| "8548427" | "8549173" | "8554876"
| "8559369" | "8561138" | "8565746"
| "8566236" | "8571474" | "8571501"
| "8571598" | "8571993" | "8572117"
| "8572256" | "8583499" | "8588240"
| "8589955" | "8594665" | "8595186"
| "8600895" | "8601125" | "8605691"
| "8615507" | "8619735" | "8620257"
| "8630925" | "8631428" | "8634425"
| "8635164" | "8639215" | "8644702"
| "8644813" | "8645518" | "8655357"
| "8656472" | "8660853" | "8666395"
| "8667542" | "8670334" | "8675852"
| "8676682" | "8676925" | "8693323"
| "8694772" | "8700729" | "8701015"
| "8705361" | "8706863" | "8713535"
| "8713641" | "8719397" | "8719423"
| "8724486" | "8725899" | "8730842"
| "8731519" | "8732808" | "8739035"
| "8744339" | "8761711" | "8780857"
| "8787249" | "8792857" | "8793304"
| "8798610" | "8799440" | "8804695"

		| "8811338" | "8811991" | "8818394" | "8819253" | "8825109" | "8826411" | "8831561" | "8838752" | "8843849" | "8845415" | "8849297" | "8855620" | "8862751" | "8863111" | "8875042" | "8880047" | "8891483" | "8898748" | "8908516" | "8929374" | "8930238" | "8930551" | "8943551" | "8948726" | "8949382" | "8949597" | "8955038" | "8966018" | "8971912" | "8977284" | "8995952" | "9002342" | "9014973" | "9015331" | "9026100" | "9030934" | "9049010" | "9064275" | "9105031" | "9111088" | "9137286" | "9172553" | "9177455" | "9282460" | "9286469" | "9286604" | "9313708" | "9325737" | "9326173" | "9344557" | "9363285" | "9367680" | "9413546" | "9418381" | "9459767" | "9501803" | "9544397" | "9589117" | "9609459" | "9712476" | "9942796" | "9986413" | "RE44412").PN.				
S42	1,489	S37 S38 S39 S40 S41 S36	US-PGPUB; USPAT; USOCR; FPRS; EPO; JPO; DERWENT; IBM_TDB	OR	OFF	2021/06/19 20:21
S43	91	secure environment service profile modem adj control link @ad<"20090213"	US-PGPUB; USPAT; USOCR; FPRS; EPO; JPO; DERWENT; IBM_TDB	AND	OFF	2021/06/19 20:35
S44	4,392	wireless cellular network secure control channel policy @ad<"20090213"	US-PGPUB; USPAT; USOCR; FPRS; EPO; JPO; DERWENT; IBM_TDB	AND	OFF	2021/06/19 21:28
S45	2,037	S27 S44	US-PGPUB; USPAT; USOCR; FPRS; EPO; JPO; DERWENT; IBM_TDB	AND	OFF	2021/06/19 21:28

EAST Search History (Interference)

Ref #	Hits	Search Query	DBs	Default Operator	Plurals	Time Stamp
S23	3,076	(726/1).CCLS.	USPAT	OR	OFF	2020/01/06 05:55
S24	163,754	(G06Q40/12 H04M15/00 H04L12/14 H04L41/5054 H04L47/20 H04M15/88 H04W12/0017 G06Q10/06315 G06Q30/0601 H04L67/145 H04W8/18 H04W72/0453 H04L9/3247 H04L63/08 H04W8/20 H04M15/58 H04M15/61 H04W88/08 H04L9/32 H04L41/0893 H04L67/306 G06Q10/06375 H04L67/327 H04W4/50 H04W12/02 H04W24/08 H04W28/02 H04W4/02 H04W4/18 H04W28/0215 H04L67/26 H04W12/08 H04W48/14 G06Q40/00 H04L41/5003 H04L63/0892 H04W4/12 G06Q30/0283 H04M15/80 G06Q20/102 G06Q30/0241 H04L63/0853 H04W4/20 H04W28/12 H04W48/16 H04W12/00 G06F15/177 G06Q30/04 H04L63/0428 H04L47/2408 H04L63/0236 H04W12/06 H04W28/0268 G06Q20/20 H04L41/0806 H04L51/046 H04L63/04 H04W4/24 G06Q30/0207 G06Q30/0284 H04L63/10 H04L63/20 G06Q20/40 H04W84/04 H04L67/2819 H04W88/06 Y02P90/86 H04L41/0876 H04L67/34 H04W84/042 H04W8/02 H04L41/5025 H04M2215/0188 H04W84/12).cpc.	USPAT	OR	OFF	2020/01/06 05:55
S25	0	(secure environment service profile modem control link).clm.	USPAT	AND	OFF	2020/01/06 06:17

6/19/2021 9:33:26 PM
C:\Users\bkaplan\Documents\EAST\Workspaces\16907887.wsp

Doc code: IDS
Doc description: Information Disclosure Statement (IDS) Filed

PTO/SB/08a (02-18)
Approved for use through 11/30/2020. OMB 0651-0031
U.S. Patent and Trademark Office; U.S. DEPARTMENT OF COMMERCE
Under the Paperwork Reduction Act of 1995, no persons are required to respond to a collection of information unless it contains a valid OMB control number.

INFORMATION DISCLOSURE STATEMENT BY APPLICANT (Not for submission under 37 CFR 1.99)		
	Application Number	16907887
	Filing Date	2020-06-22
	First Named Inventor	RALEIGH, GREGORY
	Art Unit	2434
	Examiner Name	KAPLAN, BENJAMIN
	Attorney Docket Number	RALEP025C1C1C1C1

U.S.PATENTS Remove

Examiner Initial*	Cite No	Patent Number	Kind Code[1]	Issue Date	Name of Patentee or Applicant of cited Document	Pages,Columns,Lines where Relevant Passages or Relevant Figures Appear
	1	6829596		2004-12-07	FRAZEE, Steve	
	2	6829696		2004-12-07	BALMER et al.	
	3	6839340		2005-01-04	Voit, Eric A. et al.	
	4	6842628	B1	2005-01-11	Arnold et al.	
	5	6873988	B2	2005-03-29	Herrmann et al.	
	6	6876653		2005-04-05	AMBE, Shekhar et al.	
	7	6879825	B1	2005-04-12	Daly, Brian Kevin	
	8	6882718	B1	2005-04-19	Smith, Benjamin V.	

ALL REFERENCES CONSIDERED EXCEPT WHERE LINED THROUGH. /B.A.K/

INFORMATION DISCLOSURE STATEMENT BY APPLICANT (Not for submission under 37 CFR 1.99)		
	Application Number	16907887
	Filing Date	2020-06-22
	First Named Inventor	RALEIGH, GREGORY
	Art Unit	2434
	Examiner Name	KAPLAN, BENJAMIN
	Attorney Docket Number	RALEP025C1C1C1C1

	9	6885997	B1	2005-04-26	Roberts, David T.	
	10	6901440	B1	2005-05-31	Bimm et al.	
	11	6920455		2005-07-19	WESCHLER, Paul	
	12	6922562		2005-07-26	Ward, Stephen L. et al.	
	13	6928280		2005-08-09	Xanthos, James et al.	
	14	6934249	B1	2005-08-23	Bertin, Olivier et al.	
	15	6934751	B2	2005-08-23	Jayapalan et al.	
	16	6947723		2005-09-20	Gurnani, Roger et al.	
	17	6947985	B2	2005-09-20	Hegli et al.	
	18	6952428		2005-10-04	NECKA et al.	
	19	6957067		2005-10-18	Iyer, Pradeep J. et al.	

INFORMATION DISCLOSURE STATEMENT BY APPLICANT (Not for submission under 37 CFR 1.99)		
	Application Number	16907887
	Filing Date	2020-06-22
	First Named Inventor	RALEIGH, GREGORY
	Art Unit	2434
	Examiner Name	KAPLAN, BENJAMIN
	Attorney Docket Number	RALEP025C1C1C1C1

	20	6959202	B2	2005-10-25	Heinonen et al.	
	21	6959393	B2	2005-10-25	Hollis et al.	
	22	6965667		2005-11-15	TRABANDT et al.	
	23	6965872		2005-11-15	Grdina, Jerome M.	
	24	6967958		2005-11-22	ONO, Yoshiyuki et al.	
	25	6970692	B2	2005-11-29	Tysor, Arthur James	
	26	6970927	B1	2005-11-29	Stewart et al.	
	27	6982733	B1	2006-01-03	McNally et al.	
	28	6983370	B2	2006-01-03	Eaton et al.	
	29	6996062	B1	2006-02-07	Freed et al.	
	30	6996076		2006-02-07	FORBES et al.	

INFORMATION DISCLOSURE STATEMENT BY APPLICANT (Not for submission under 37 CFR 1.99)		
	Application Number	16907887
	Filing Date	2020-06-22
	First Named Inventor	RALEIGH, GREGORY
	Art Unit	2434
	Examiner Name	KAPLAN, BENJAMIN
	Attorney Docket Number	RALEP025C1C1C1C1

	31	6996393		2006-02-07	Pyhalammi, Seppo et al.	
	32	6998985		2006-02-14	REISMAN et al.	
	33	7002920		2006-02-21	Ayyagari, Deepak et al.	
	34	7007295	B1	2006-02-28	Rose et al.	
	35	7013469	B2	2006-03-14	Smith et al.	
	36	7017189	B1	2006-03-21	DeMello et al.	
	37	7024200		2006-04-04	McKENNA et al.	
	38	7024460	B2	2006-04-04	Koopmas et al.	
	39	7027055	B2	2006-04-11	Anderson et al.	
	40	7027408		2006-04-11	NABKEL et al.	
	41	7031733	B2	2006-04-18	Alminana et al.	

INFORMATION DISCLOSURE STATEMENT BY APPLICANT (Not for submission under 37 CFR 1.99)		
	Application Number	16907887
	Filing Date	2020-06-22
	First Named Inventor	RALEIGH, GREGORY
	Art Unit	2434
	Examiner Name	KAPLAN, BENJAMIN
	Attorney Docket Number	RALEP025C1C1C1C1

	42	7032072	B1	2006-04-18	Quinn et al.	
	43	7039027	B2	2006-05-02	Bridgelall, Raj	
	44	7039037		2006-05-02	Wang, Jiwei R. et al.	
	45	7039403		2006-05-02	Wong, Gregory A.	
	46	7039713	B1	2006-05-02	Van Gunter, David et al.	
	47	7042988		2006-05-09	JUITT et al.	
	48	7043225	B1	2006-05-09	Patel et al.	
	49	7043226		2006-05-09	Yamauchi, Toshiaki	
	50	7043268	B2	2006-05-09	Yukie et al.	
	51	7047276	B2	2006-05-16	Liu et al.	
	52	7058022	B1	2006-06-06	Carolan et al.	

INFORMATION DISCLOSURE STATEMENT BY APPLICANT (Not for submission under 37 CFR 1.99)		
	Application Number	16907887
	Filing Date	2020-06-22
	First Named Inventor	RALEIGH, GREGORY
	Art Unit	2434
	Examiner Name	KAPLAN, BENJAMIN
	Attorney Docket Number	RALEP025C1C1C1C1

	53	7058968		2006-06-06	ROWLAND et al.	
	54	7068600		2006-06-27	CAIN, Joseph Bibb	
	55	7069248		2006-06-27	HUBER, Adriano	
	56	7082422	B1	2006-07-25	Zirngibl et al.	
	57	7084775	B1	2006-08-01	Smith, Michael R.	
	58	7092696		2006-08-15	HOSAIN et al.	
	59	7095754	B2	2006-08-22	Benveniste, Mathilde	
	60	7102620	B2	2006-09-05	Harries, Andrew Stanely Guy et al.	
	61	7110753	B2	2006-09-19	Campen, Kenneth Brian	
	62	7113780	B2	2006-09-26	Mckenna Daniel et al.	
	63	7113997		2012-09-26	Jayapalan, Jay et al.	

INFORMATION DISCLOSURE STATEMENT BY APPLICANT (Not for submission under 37 CFR 1.99)		
	Application Number	16907887
	Filing Date	2020-06-22
	First Named Inventor	RALEIGH, GREGORY
	Art Unit	2434
	Examiner Name	KAPLAN, BENJAMIN
	Attorney Docket Number	RALEP025C1C1C1C1

	64	7120133	B1	2006-10-10	Joo et al.	
	65	7133386	B2	2006-11-07	Holur et al.	
	66	7133695	B2	2006-11-07	Beyda, William J.	
	67	7136361	B2	2006-11-14	Benveniste, Mathilde	
	68	7139569	B2	2006-11-21	Kato, Akira	
	69	7142876		2006-11-28	TROSSEN et al.	
	70	7149229	B1	2006-12-12	Leung, Kent K.	
	71	7149521	B2	2006-12-12	Sundar et al.	
	72	7151764	B1	2006-12-19	Heinonen et al.	
	73	7158792		2007-01-02	COOK et al.	
	74	7162237	B1	2007-01-09	Silver et al.	

INFORMATION DISCLOSURE STATEMENT BY APPLICANT (Not for submission under 37 CFR 1.99)		
	Application Number	16907887
	Filing Date	2020-06-22
	First Named Inventor	RALEIGH, GREGORY
	Art Unit	2434
	Examiner Name	KAPLAN, BENJAMIN
	Attorney Docket Number	RALEP025C1C1C1C1

	75	7165040	B2	2007-01-16	Ehrman et al.	
	76	7167078		2007-01-23	POURCHOT, Shawn C.	
	77	7174156	B1	2007-02-06	Mangal, Manish	
	78	7174174		2007-02-06	BORIS et al.	
	79	7177919	B1	2007-02-13	Truong et al.	
	80	7180855		2007-02-20	LIN , Wei	
	81	7181017		2007-02-20	Nagel, Robert H. et al.	
	82	7191248	B2	2007-03-13	Chattopadhyay et al.	
	83	7197321		2007-03-27	ERSKINE et al.	
	84	7200112	B2	2007-04-03	Sundar et al.	
	85	7200551	B1	2007-04-03	Senez	

INFORMATION DISCLOSURE STATEMENT BY APPLICANT (Not for submission under 37 CFR 1.99)		
	Application Number	16907887
	Filing Date	2020-06-22
	First Named Inventor	RALEIGH, GREGORY
	Art Unit	2434
	Examiner Name	KAPLAN, BENJAMIN
	Attorney Docket Number	RALEP025C1C1C1C1

	86	7203169	B1	2007-04-10	Okholm, Jon et al.	
	87	7203721	B1	2007-04-10	Ben-Efraim et al.	
	88	7203752	B2	2007-04-10	Rice et al.	
	89	7212491		2007-05-01	Koga, Takahiro	
	90	7219123	B1	2007-05-15	Fiechter et al.	
	91	7222190	B2	2007-05-22	Klinker et al.	
	92	7222304	B2	2007-05-22	Beaton et al.	
	93	7224968	B2	2007-05-29	Dobson et al.	
	94	7228354		2007-06-05	CHAMBLISS, David Darden et al.	
	95	7236780		2007-06-26	Benco, David S.	
	96	7242668	B2	2007-07-10	Kan et al.	

INFORMATION DISCLOSURE STATEMENT BY APPLICANT (Not for submission under 37 CFR 1.99)		
	Application Number	16907887
	Filing Date	2020-06-22
	First Named Inventor	RALEIGH, GREGORY
	Art Unit	2434
	Examiner Name	KAPLAN, BENJAMIN
	Attorney Docket Number	RALEP025C1C1C1C1

	97	7242920		2007-07-10	MORRIS, Robert P.	
	98	7245901		2007-07-17	McGREGOR et al.	
	99	7248570	B2	2007-07-24	Bahl et al.	
	100	7251218		2007-07-31	Jorgensen, Jacob W.	
	101	7260382	B1	2007-08-21	Lamb et al.	
	102	7266371	B1	2007-09-04	Amin et al.	
	103	7269157	B2	2007-09-11	Klinker et al.	
	104	7271765	B2	2007-09-18	Stilp et al.	
	105	7272660	B1	2007-09-18	Powers et al.	
	106	7280816		2007-10-09	FRATTI et al.	
	107	7280818		2007-10-09	CLAYTON, Steve	

INFORMATION DISCLOSURE STATEMENT BY APPLICANT (Not for submission under 37 CFR 1.99)		
	Application Number	16907887
	Filing Date	2020-06-22
	First Named Inventor	RALEIGH, GREGORY
	Art Unit	2434
	Examiner Name	KAPLAN, BENJAMIN
	Attorney Docket Number	RALEP025C1C1C1C1

	108	7283561		2007-10-16	Picher-Dempsey, Heidi	
	109	7283963		2007-10-16	FITZPATRICK, John E. et al.	
	110	7286834	B2	2007-10-23	Walter	
	111	7286848	B2	2007-10-23	Vireday, Richard P. et al.	
	112	7289489		2007-10-30	KUNG et al.	
	113	7290283		2007-10-30	COPELAND III, John A.	
	114	7310424		2007-12-18	Gehring, Stephan Walter et al.	
	115	7313237	B2	2007-12-25	Bahl, Paramvir et al.	
	116	7315892	B2	2008-01-01	Freimuth et al.	
	117	7317699		2008-01-08	GODFREY et al.	
	118	7318111	B2	2008-01-08	Zhao, Wen	

INFORMATION DISCLOSURE STATEMENT BY APPLICANT (Not for submission under 37 CFR 1.99)		
	Application Number	16907887
	Filing Date	2020-06-22
	First Named Inventor	RALEIGH, GREGORY
	Art Unit	2434
	Examiner Name	KAPLAN, BENJAMIN
	Attorney Docket Number	RALEP025C1C1C1C1

	119	7320029	B2	2008-01-15	Rinne et al.	
	120	7322044		2008-01-22	HRASTAR, Scott E.	
	121	7324447		2008-01-29	MORFORD, Michael Robert	
	122	7325037		2008-01-29	LAWSON, Karen L.	
	123	7336960		2008-02-26	ZAVALKOVSKY et al.	
	124	7340772	B2	2008-03-04	Panasyuk et al.	
	125	7346410		2008-03-18	UCHIYAMA, Kenji	
	126	7349695		2008-03-25	OOMMEN et al.	
	127	7353533	B2	2008-04-01	Wright et al.	
	128	7356011		2008-04-08	Waters, Christopher J.F. et al.	
	129	7356337		2008-04-08	FLORENCE, Shahar	

INFORMATION DISCLOSURE STATEMENT BY APPLICANT (Not for submission under 37 CFR 1.99)		
	Application Number	16907887
	Filing Date	2020-06-22
	First Named Inventor	RALEIGH, GREGORY
	Art Unit	2434
	Examiner Name	KAPLAN, BENJAMIN
	Attorney Docket Number	RALEP025C1C1C1C1

	130	7366497		2008-04-29	NAGATA, Hideaki	
	131	7366654	B2	2008-04-29	Moore, Robert C.	
	132	7366934	B1	2008-04-29	Narayan et al.	
	133	7369848	B2	2008-05-06	Jiang, Yue Jun	
	134	7369856	B2	2008-05-06	Ovadia, Shlomo	
	135	7373136		2008-05-13	WATLER et al.	
	136	7373179		2008-05-13	Stine, Ted et al.	
	137	7379731	B2	2008-05-27	Natsuno et al.	
	138	7388950		2008-06-17	ELSEY et al.	
	139	7389412	B2	2008-06-17	Sharma et al.	
	140	7391724	B2	2008-06-24	Alakoski et al.	

INFORMATION DISCLOSURE STATEMENT BY APPLICANT (Not for submission under 37 CFR 1.99)		
	Application Number	16907887
	Filing Date	2020-06-22
	First Named Inventor	RALEIGH, GREGORY
	Art Unit	2434
	Examiner Name	KAPLAN, BENJAMIN
	Attorney Docket Number	RALEP025C1C1C1C1

	141	7395056	B2	2008-07-01	Petermann	
	142	7395244	B1	2008-07-01	Kingsford, Bryan	
	143	7401338		2008-07-15	BOWEN et al.	
	144	7403763		2008-07-22	MAES, Stephane H.	
	145	7409447	B	2008-08-05	Assadzadeh, Alireza	
	146	7409569	B2	2008-08-05	Illowsky et al.	
	147	7411930	B2	2008-08-12	Montojo et al.	
	148	7418253		2008-08-26	KAVANAH, Alan	
	149	7418257		2008-08-26	Kim, Myong-Ju	
	150	7421004		2008-09-02	FEHER, Kamilo	
	151	7423971	B1	2008-09-09	Mohaban et al.	

INFORMATION DISCLOSURE STATEMENT BY APPLICANT (Not for submission under 37 CFR 1.99)		
	Application Number	16907887
	Filing Date	2020-06-22
	First Named Inventor	RALEIGH, GREGORY
	Art Unit	2434
	Examiner Name	KAPLAN, BENJAMIN
	Attorney Docket Number	RALEP025C1C1C1C1

	152	7428750	B1	2008-09-23	Dunn et al.	
	153	7433362	B2	2008-10-07	Mallya et al.	
	154	7436816	B2	2008-10-14	Mehta et al.	
	155	7440433	B2	2008-10-21	Rink et al.	
	156	7444669	B1	2008-10-28	Bahl, Paramvir et al.	
	157	7450591		2008-11-11	KORLING et al.	
	158	7450927		2008-11-11	CRESWELL et al.	
	159	7454191	B2	2008-11-18	Dawson et al.	
	160	7457265		2008-11-25	Julka, Vibhor et al.	
	161	7457870	B1	2008-11-25	Lownsbrough et al.	
	162	7460837	B2	2008-12-02	Diener, Neil R.	

INFORMATION DISCLOSURE STATEMENT BY APPLICANT (Not for submission under 37 CFR 1.99)		
	Application Number	16907887
	Filing Date	2020-06-22
	First Named Inventor	RALEIGH, GREGORY
	Art Unit	2434
	Examiner Name	KAPLAN, BENJAMIN
	Attorney Docket Number	RALEP025C1C1C1C1

	163	7466652	B2	2008-12-16	Lau et al.	
	164	7467160	B2	2008-12-16	McIntyre	
	165	7472189		2008-12-30	Mallya, Arvind R. et al.	
	166	7478420	B2	2009-01-13	Wright, Michael et al.	
	167	7486185		2009-02-03	CULPEPPER et al.	
	168	7486658	B2	2009-02-03	Kumar, Rajneesh	
	169	7493659	B1	2009-02-17	Wu, Handong et al.	
	170	7496652		2009-02-24	Pezzutti, David	
	171	7499438		2009-03-03	Hinman, Brian L. et al.	
	172	7499537		2009-03-03	ELSEY et al.	
	173	7502672	B1	2009-03-10	Kolls, H. Brock	

INFORMATION DISCLOSURE STATEMENT BY APPLICANT (Not for submission under 37 CFR 1.99)		
	Application Number	16907887
	Filing Date	2020-06-22
	First Named Inventor	RALEIGH, GREGORY
	Art Unit	2434
	Examiner Name	KAPLAN, BENJAMIN
	Attorney Docket Number	RALEP025C1C1C1C1

	174	7505756	B2	2009-03-17	Bahl	
	175	7505795	B1	2009-03-17	Lim et al.	
	176	7508799	B2	2009-03-24	Sumner et al.	
	177	7512128	B2	2009-03-31	DiMambro et al.	
	178	7512131	B2	2009-03-31	Svensson et al.	
	179	7515608		2009-04-07	Yuan, Yuan et al.	
	180	7515926	B2	2009-04-07	Bu et al.	
	181	7516219		2009-04-07	MOGHADDAM et al.	
	182	7522549	B2	2009-04-21	Karaoguz et al.	
	183	7522576	B2	2009-04-21	Du et al.	
	184	7526541	B2	2009-04-28	Roese et al.	

INFORMATION DISCLOSURE STATEMENT BY APPLICANT (Not for submission under 37 CFR 1.99)		
	Application Number	16907887
	Filing Date	2020-06-22
	First Named Inventor	RALEIGH, GREGORY
	Art Unit	2434
	Examiner Name	KAPLAN, BENJAMIN
	Attorney Docket Number	RALEP025C1C1C1C1

	185	7529204	B2	2009-05-05	Bourlas, Yair et al.	
	186	7535880		2009-05-19	Hinman, Brian L. et al.	
	187	7536695	B2	2009-05-19	Alam et al.	
	188	7539132	B2	2009-05-26	Werner et al.	
	189	7539862	B2	2009-05-26	Edgett et al.	
	190	7540408	B2	2009-06-02	Levine et al.	
	191	7545782		2009-06-09	Rayment, Stephen G. et al.	
	192	7546460		2009-06-09	Maes, Stephane H.	
	193	7546629		2009-06-09	ALBERT, Anthony et al.	
	194	7548875	B2	2009-06-16	Mikkelsen et al.	
	195	7548976	B2	2009-06-16	Bahl, Paramvir et al.	

INFORMATION DISCLOSURE STATEMENT BY APPLICANT (Not for submission under 37 CFR 1.99)		
	Application Number	16907887
	Filing Date	2020-06-22
	First Named Inventor	RALEIGH, GREGORY
	Art Unit	2434
	Examiner Name	KAPLAN, BENJAMIN
	Attorney Docket Number	RALEP025C1C1C1C1

	196	7551921	B2	2009-06-23	Petermann	
	197	7551922		2009-06-23	Roskowski, Steve et al.	
	198	7554983	B1	2009-06-30	Muppala, Suresh	
	199	7555757	B2	2009-06-30	Smith et al.	
	200	7561899	B2	2009-07-14	Lee, Changseok	
	201	7562213	B1	2009-07-14	Timms, Natalie	
	202	7564799	B2	2009-07-21	Holland et al.	
	203	7565141		2009-07-21	Macaluso, Anthony G.	
	204	7574509	B2	2009-08-11	Nixon et al.	
	205	7574731		2009-08-11	FASCENDA, Anthony C.	
	206	7577431	B2	2009-08-18	Jiang, Yue Jun	

INFORMATION DISCLOSURE STATEMENT BY APPLICANT (Not for submission under 37 CFR 1.99)		
	Application Number	16907887
	Filing Date	2020-06-22
	First Named Inventor	RALEIGH, GREGORY
	Art Unit	2434
	Examiner Name	KAPLAN, BENJAMIN
	Attorney Docket Number	RALEP025C1C1C1C1

	207	7580356	B1	2009-08-25	Mishra et al.	
	208	7580857		2009-08-25	VanFLEET et al.	
	209	7583964	B2	2009-09-01	Wong, Gregory A.	
	210	7584298	B2	2009-09-01	Klinker et al.	
	211	7585217	B2	2009-09-08	Lutnick et al.	
	212	7586871	B2	2009-09-08	Hamilton et al.	
	213	7593417		2009-09-22	Wang, James et al.	
	214	7593730	B2	2009-09-22	Khandelwal, Deepak et al.	
	215	7596373	B2	2009-09-29	Mcgregor, Christopher et al.	
	216	7599288		2009-10-06	COLE, Raymond E. et al.	
	217	7599714	B2	2009-10-06	Kuzminskiy, Alexandr	

INFORMATION DISCLOSURE STATEMENT BY APPLICANT (Not for submission under 37 CFR 1.99)		
	Application Number	16907887
	Filing Date	2020-06-22
	First Named Inventor	RALEIGH, GREGORY
	Art Unit	2434
	Examiner Name	KAPLAN, BENJAMIN
	Attorney Docket Number	RALEP025C1C1C1C1

	218	7602746	B2	2009-10-13	Calhoun et al.	
	219	7606918	B2	2009-10-20	Holzman et al.	
	220	7607041	B2	2009-10-20	Kraemer et al.	
	221	7609650		2009-10-27	ROSKOWSKI, Steve et al.	
	222	7609700		2009-10-27	Ying, Wen-Ping et al.	
	223	7610047	B2	2009-10-27	Hicks III et al.	
	224	7610057	B2	2009-10-27	Bahl et al.	
	225	7610328		2009-10-27	HAASE et al.	
	226	7610396	B2	2009-10-27	Taglienti et al.	
	227	7614051	B	2009-11-03	Glaum et al.	
	228	7616962	B2	2009-11-10	Oswal, Anand K. et al.	

INFORMATION DISCLOSURE STATEMENT BY APPLICANT (Not for submission under 37 CFR 1.99)		
	Application Number	16907887
	Filing Date	2020-06-22
	First Named Inventor	RALEIGH, GREGORY
	Art Unit	2434
	Examiner Name	KAPLAN, BENJAMIN
	Attorney Docket Number	RALEP025C1C1C1C1

	229	7617516		2009-11-10	HUSLAK et al.	
	230	7620041		2009-11-17	Dunn, Jeffrey H. et al.	
	231	7620065		2009-11-17	FALARDEAU, Eric	
	232	7620162		2009-11-17	AARON et al.	
	233	7620383	B2	2009-11-17	Taglienti et al.	
	234	7627314		2009-12-01	Carlson, Steven I. et al.	
	235	7627600	B2	2009-12-01	Citron et al.	
	236	7627767	B2	2009-12-01	Sherman et al.	
	237	7627872	B2	2009-12-01	Hebeler et al.	
	238	7633438		2009-12-15	Tysowski, Piotr Konrad	
	239	7634388		2009-12-15	Archer, Charles J. et al.	Entire Document

INFORMATION DISCLOSURE STATEMENT BY APPLICANT (Not for submission under 37 CFR 1.99)		
	Application Number	16907887
	Filing Date	2020-06-22
	First Named Inventor	RALEIGH, GREGORY
	Art Unit	2434
	Examiner Name	KAPLAN, BENJAMIN
	Attorney Docket Number	RALEP025C1C1C1C1

	240	7636574		2009-12-22	Poosala, Viswanath	
	241	7636626	B2	2009-12-22	Oesterling et al.	
	242	7643411	B2	2010-01-05	Andreasen et al.	
	243	7644151		2010-01-05	JERRIM, John et al.	
	244	7644267		2010-01-05	YLIKOSKI, Martti et al.	
	245	7644414	B2	2010-01-05	Smith et al.	
	246	7647047		2010-01-12	MOGHADDAM et al.	
	247	7650137		2010-01-19	JOBS et al.	
	248	7653394	B2	2010-01-26	McMillin, Brian K.	
	249	7656271	B2	2010-02-02	Ehrman et al.	
	250	7657920	B2	2010-02-02	Arseneau et al.	

INFORMATION DISCLOSURE STATEMENT BY APPLICANT (Not for submission under 37 CFR 1.99)		
	Application Number	16907887
	Filing Date	2020-06-22
	First Named Inventor	RALEIGH, GREGORY
	Art Unit	2434
	Examiner Name	KAPLAN, BENJAMIN
	Attorney Docket Number	RALEP025C1C1C1C1

	251	7660419	B1	2010-02-09	Ho, Jin-Meng	
	252	7661124	B2	2010-02-09	Ramanathan et al.	
	253	7664494	B2	2010-02-16	Jiang, Yue Jun	
	254	7668176		2010-02-23	Chuah, Mooi Choo	
	255	7668612	B	2010-02-23	Okkonen, Harri	
	256	7668903		2010-02-23	EDWARDS et al.	
	257	7668966	B2	2010-02-23	Klinker et al.	
	258	7676673	B2	2010-03-09	Weller et al.	
	259	7680086	B2	2010-03-16	Eglin	
	260	7681226	B2	2010-03-16	Kraemer et al.	
	261	7684370	B2	2010-03-23	Kezys, Vytautas Robertas	

INFORMATION DISCLOSURE STATEMENT BY APPLICANT (Not for submission under 37 CFR 1.99)		
	Application Number	16907887
	Filing Date	2020-06-22
	First Named Inventor	RALEIGH, GREGORY
	Art Unit	2434
	Examiner Name	KAPLAN, BENJAMIN
	Attorney Docket Number	RALEP025C1C1C1C1

	262	7685131		2010-03-23	Batra, Vishal Singh et al.	
	263	7685254		2010-03-23	Pandya, Ashish A.	
	264	7685530	B2	2010-03-23	Sherrard et al.	
	265	7688792	B2	2010-03-30	Babbar et al.	
	266	7693107	B2	2010-04-06	De Froment, Eric	
	267	7693720		2010-04-06	KENNEWICK et al.	
	268	7697540	B2	2010-04-13	Haddad et al.	
	269	7710932		2010-05-04	MUTHUSWAMY, Sivakumar et al.	
	270	7711848		2010-05-04	MAES, Stephane H.	
	271	7719966	B2	2010-05-18	Luft et al.	
	272	7720206	B2	2010-05-18	Devolites et al.	

INFORMATION DISCLOSURE STATEMENT BY APPLICANT (Not for submission under 37 CFR 1.99)		
	Application Number	16907887
	Filing Date	2020-06-22
	First Named Inventor	RALEIGH, GREGORY
	Art Unit	2434
	Examiner Name	KAPLAN, BENJAMIN
	Attorney Docket Number	RALEP025C1C1C1C1

	273	7720464	B2	2010-05-18	Batta, Puneet	
	274	7720505		2010-05-18	GOPI et al.	
	275	7720960	B2	2010-05-18	Pruss, Richard Manfred et al.	
	276	7721296	B2	2010-05-18	Ricagni, Giuseppe	
	277	7724716	B2	2010-05-25	Fadell, Anthony M.	
	278	7725570		2010-05-25	Lewis, Lundy	
	279	7729326		2010-06-01	Sekhar, Ramesh	
	280	7730123		2010-06-01	ERICKSON, Richard R. et al.	
	281	7734784		2010-06-08	ARAUJO et al.	
	282	7742406	B1	2010-06-22	Muppala, Suresh	
	283	7746854		2010-06-29	AMBE, Shekhar et al.	

INFORMATION DISCLOSURE STATEMENT BY APPLICANT (Not for submission under 37 CFR 1.99)		
	Application Number	16907887
	Filing Date	2020-06-22
	First Named Inventor	RALEIGH, GREGORY
	Art Unit	2434
	Examiner Name	KAPLAN, BENJAMIN
	Attorney Docket Number	RALEP025C1C1C1C1

	284	7747240		2010-06-29	BRISCOE et al.	
	285	7747699		2010-06-29	PRUEITT et al.	
	286	7747730		2010-06-29	HARLOW, James D.	
	287	7752330	B2	2010-07-06	Olsen et al.	
	288	7756056	B2	2010-07-13	Kim et al.	
	289	7756534		2010-07-13	Anupam, Vinod et al.	
	290	7756757	B1	2010-07-13	Oakes III, Charles Lee	
	291	7760137	B2	2010-07-20	Martucci et al.	
	292	7760711	B1	2010-07-20	Kung et al.	
	293	7760861		2010-07-20	Croak, Marian et al.	
	294	7765294	B2	2010-07-27	Edwards et al.	

INFORMATION DISCLOSURE STATEMENT BY APPLICANT (Not for submission under 37 CFR 1.99)		
	Application Number	16907887
	Filing Date	2020-06-22
	First Named Inventor	RALEIGH, GREGORY
	Art Unit	2434
	Examiner Name	KAPLAN, BENJAMIN
	Attorney Docket Number	RALEP025C1C1C1C1

	295	7769397	B2	2010-08-03	Funato et al.	
	296	7770785	B2	2010-08-10	Jha et al.	
	297	7774323	B2	2010-08-10	Helfman, Nadav	
	298	7774412	B1	2010-08-10	Schnepel, Soenke	
	299	7774456	B1	2010-08-10	Lownsbrough, Derek Leigh et al.	
	300	7778176		2010-08-17	Morford, Michael Robert	

If you wish to add additional U.S. Patent citation information please click the Add button. Add

U.S.PATENT APPLICATION PUBLICATIONS Remove

Examiner Initial*	Cite No	Publication Number	Kind Code[1]	Publication Date	Name of Patentee or Applicant of cited Document	Pages,Columns,Lines where Relevant Passages or Relevant Figures Appear
	1					

If you wish to add additional U.S. Published Application citation information please click the Add button. Add

FOREIGN PATENT DOCUMENTS Remove

Examiner Initial*	Cite No	Foreign Document Number[3]	Country Code[2]	Kind Code[4]	Publication Date	Name of Patentee or Applicant of cited Document	Pages,Columns,Lines where Relevant Passages or Relevant Figures Appear	T[5]

EFS Web 2.1.18

ALL REFERENCES CONSIDERED EXCEPT WHERE LINED THROUGH. /B.A.K/

INFORMATION DISCLOSURE STATEMENT BY APPLICANT (Not for submission under 37 CFR 1.99)		
	Application Number	16907887
	Filing Date	2020-06-22
	First Named Inventor	RALEIGH, GREGORY
	Art Unit	2434
	Examiner Name	KAPLAN, BENJAMIN
	Attorney Docket Number	RALEP025C1C1C1C1

	1							

If you wish to add additional Foreign Patent Document citation information please click the Add button Add

NON-PATENT LITERATURE DOCUMENTS Remove

Examiner Initials*	Cite No	Include name of the author (in CAPITAL LETTERS), title of the article (when appropriate), title of the item (book, magazine, journal, serial, symposium, catalog, etc), date, pages(s), volume-issue number(s), publisher, city and/or country where published.	T[5]
	1		

If you wish to add additional non-patent literature document citation information please click the Add button Add

EXAMINER SIGNATURE

Examiner Signature	/BENJAMIN A KAPLAN/	Date Considered	06/19/2021

*EXAMINER: Initial if reference considered, whether or not citation is in conformance with MPEP 609. Draw line through a citation if not in conformance and not considered. Include copy of this form with next communication to applicant.

[1] See Kind Codes of USPTO Patent Documents at www.USPTO.GOV or MPEP 901.04. [2] Enter office that issued the document, by the two-letter code (WIPO Standard ST.3). [3] For Japanese patent documents, the indication of the year of the reign of the Emperor must precede the serial number of the patent document. [4] Kind of document by the appropriate symbols as indicated on the document under WIPO Standard ST.16 if possible. [5] Applicant is to place a check mark here if English language translation is attached.

ALL REFERENCES CONSIDERED EXCEPT WHERE LINED THROUGH. /B.A.K/

INFORMATION DISCLOSURE STATEMENT BY APPLICANT (Not for submission under 37 CFR 1.99)		
	Application Number	16907887
	Filing Date	2020-06-22
	First Named Inventor	RALEIGH, GREGORY
	Art Unit	2434
	Examiner Name	KAPLAN, BENJAMIN
	Attorney Docket Number	RALEP025C1C1C1C1

CERTIFICATION STATEMENT

Please see 37 CFR 1.97 and 1.98 to make the appropriate selection(s):

That each item of information contained in the information disclosure statement was first cited in any communication from a foreign patent office in a counterpart foreign application not more than three months prior to the filing of the information disclosure statement. See 37 CFR 1.97(e)(1).

OR

☐ That no item of information contained in the information disclosure statement was cited in a communication from a foreign patent office in a counterpart foreign application, and, to the knowledge of the person signing the certification after making reasonable inquiry, no item of information contained in the information disclosure statement was known to any individual designated in 37 CFR 1.56(c) more than three months prior to the filing of the information disclosure statement. See 37 CFR 1.97(e)(2).

See attached certification statement.

The fee set forth in 37 CFR 1.17 (p) has been submitted herewith.

X A certification statement is not submitted herewith.

SIGNATURE

A signature of the applicant or representative is required in accordance with CFR 1.33, 10.18. Please see CFR 1.4(d) for the form of the signature.

Signature	/James E. Harris/	Date (YYYY-MM-DD)	2021-02-03
Name/Print	James E. Harris	Registration Number	40013

This collection of information is required by 37 CFR 1.97 and 1.98. The information is required to obtain or retain a benefit by the public which is to file (and by the USPTO to process) an application. Confidentiality is governed by 35 U.S.C. 122 and 37 CFR 1.14. This collection is estimated to take 1 hour to complete, including gathering, preparing and submitting the completed application form to the USPTO. Time will vary depending upon the individual case. Any comments on the amount of time you require to complete this form and/or suggestions for reducing this burden, should be sent to the Chief Information Officer, U.S. Patent and Trademark Office, U.S. Department of Commerce, P.O. Box 1450, Alexandria, VA 22313-1450. DO NOT SEND FEES OR COMPLETED FORMS TO THIS ADDRESS. **SEND TO: Commissioner for Patents, P.O. Box 1450, Alexandria, VA 22313-1450.**

Privacy Act Statement

The Privacy Act of 1974 (P.L. 93-579) requires that you be given certain information in connection with your submission of the attached form related to a patent application or patent. Accordingly, pursuant to the requirements of the Act, please be advised that: (1) the general authority for the collection of this information is 35 U.S.C. 2(b)(2); (2) furnishing of the information solicited is voluntary; and (3) the principal purpose for which the information is used by the U.S. Patent and Trademark Office is to process and/or examine your submission related to a patent application or patent. If you do not furnish the requested information, the U.S. Patent and Trademark Office may not be able to process and/or examine your submission, which may result in termination of proceedings or abandonment of the application or expiration of the patent.

The information provided by you in this form will be subject to the following routine uses:

1. The information on this form will be treated confidentially to the extent allowed under the Freedom of Information Act (5 U.S.C. 552) and the Privacy Act (5 U.S.C. 552a). Records from this system of records may be disclosed to the Department of Justice to determine whether the Freedom of Information Act requires disclosure of these record s.

2. A record from this system of records may be disclosed, as a routine use, in the course of presenting evidence to a court, magistrate, or administrative tribunal, including disclosures to opposing counsel in the course of settlement negotiations.

3. A record in this system of records may be disclosed, as a routine use, to a Member of Congress submitting a request involving an individual, to whom the record pertains, when the individual has requested assistance from the Member with respect to the subject matter of the record.

4. A record in this system of records may be disclosed, as a routine use, to a contractor of the Agency having need for the information in order to perform a contract. Recipients of information shall be required to comply with the requirements of the Privacy Act of 1974, as amended, pursuant to 5 U.S.C. 552a(m).

5. A record related to an International Application filed under the Patent Cooperation Treaty in this system of records may be disclosed, as a routine use, to the International Bureau of the World Intellectual Property Organization, pursuant to the Patent Cooperation Treaty.

6. A record in this system of records may be disclosed, as a routine use, to another federal agency for purposes of National Security review (35 U.S.C. 181) and for review pursuant to the Atomic Energy Act (42 U.S.C. 218(c)).

7. A record from this system of records may be disclosed, as a routine use, to the Administrator, General Services, or his/her designee, during an inspection of records conducted by GSA as part of that agency's responsibility to recommend improvements in records management practices and programs, under authority of 44 U.S.C. 2904 and 2906. Such disclosure shall be made in accordance with the GSA regulations governing inspection of records for this purpose, and any other relevant (i.e., GSA or Commerce) directive. Such disclosure shall not be used to make determinations about individuals.

8. A record from this system of records may be disclosed, as a routine use, to the public after either publication of the application pursuant to 35 U.S.C. 122(b) or issuance of a patent pursuant to 35 U.S.C. 151. Further, a record may be disclosed, subject to the limitations of 37 CFR 1.14, as a routine use, to the public if the record was filed in an application which became abandoned or in which the proceedings were terminated and which application is referenced by either a published application, an application open to public inspections or an issued patent.

9. A record from this system of records may be disclosed, as a routine use, to a Federal, State, or local law enforcement agency, if the USPTO becomes aware of a violation or potential violation of law or regulation.

ALL REFERENCES CONSIDERED EXCEPT WHERE LINED THROUGH. /B.A.K/

Google Search Terms:

(service) (secure) (modem) (network) (control)
secure service measurement
control execution partition
secure service measurement control execution partition
wireless cellular network secure control channel policy
wireless cellular network secure control channel policy secure memory partition

Bibliographic Data

Application No: 16/907,887

Foreign Priority claimed: ○ Yes ◉ No

35 USC 119 (a-d) conditions met: ☐ Yes ☑ No ☐ Met After Allowance

Verified and Acknowledged: /BENJAMIN A KAPLAN/ (Examiner's Signature) [ ] (Initials)

Title: Security Techniques for Device Assisted Services

FILING or 371(c) DATE	CLASS	GROUP ART UNIT	ATTORNEY DOCKET NO.
06/22/2020 **RULE**	726	2434	RALEP025C1C1C1C1

APPLICANTS

Headwater Research LLC, Tyler, TX,

INVENTORS

Gregory G. Raleigh, Woodside, CA, UNITED STATES

CONTINUING DATA

This application is a CON of 16034362 07/13/2018 PAT 10694385

16034362 is a CON of 14948065 11/20/2015 PAT 10028144

14948065 is a CON of 13737748 01/09/2013 PAT 9198042

13737748 is a CON of 12694445 01/27/2010 PAT 8391834

12694445 has PRO of 61252151 10/15/2009

12694445 is a CIP of 12380780 03/02/2009 PAT 8839388

12380780 has PRO of 61207739 02/13/2009

12380780 has PRO of 61207393 02/10/2009

12380780 has PRO of 61206944 02/04/2009

12380780 has PRO of 61206354 01/28/2009

FOREIGN APPLICATIONS

IF REQUIRED, FOREIGN LICENSE GRANTED**

06/30/2020

**** SMALL ENTITY ****

STATE OR COUNTRY

UNITED STATES

ADDRESS

Headwater Research LLC

1011 Pruitt Place

Tyler, TX 75703
UNITED STATES

FILING FEE RECEIVED

$865

Doc code: IDS
Doc description: Information Disclosure Statement (IDS) Filed

PTO/SB/08a (02-18)
Approved for use through 11/30/2020. OMB 0651-0031
U.S. Patent and Trademark Office; U.S. DEPARTMENT OF COMMERCE
Under the Paperwork Reduction Act of 1995, no persons are required to respond to a collection of information unless it contains a valid OMB control number.

INFORMATION DISCLOSURE STATEMENT BY APPLICANT (Not for submission under 37 CFR 1.99)		
	Application Number	16907887
	Filing Date	2020-06-22
	First Named Inventor	RALEIGH, GREGORY
	Art Unit	2434
	Examiner Name	KAPLAN, BENJAMIN
	Attorney Docket Number	RALEP025C1C1C1C1

U.S.PATENTS Remove

Examiner Initial*	Cite No	Patent Number	Kind Code[1]	Issue Date	Name of Patentee or Applicant of cited Document	Pages,Columns,Lines where Relevant Passages or Relevant Figures Appear
	1	7778643		2010-08-17	Laroia, Rajiv et al.	
	2	7792257	B1	2010-09-07	Vanier et al.	
	3	7792538		2010-09-07	Kozisek, Steven E.	
	4	7792708		2010-09-07	ALVA, Jessi	
	5	7797019	B2	2010-09-14	Friedmann	
	6	7797060	B2	2010-09-14	Grgic et al.	
	7	7797204		2010-09-14	BALENT, Bruce F.	
	8	7797401		2010-09-14	STEWART et al.	

ALL REFERENCES CONSIDERED EXCEPT WHERE LINED THROUGH. /B.A.K/

INFORMATION DISCLOSURE STATEMENT BY APPLICANT (Not for submission under 37 CFR 1.99)		
	Application Number	16907887
	Filing Date	2020-06-22
	First Named Inventor	RALEIGH, GREGORY
	Art Unit	2434
	Examiner Name	KAPLAN, BENJAMIN
	Attorney Docket Number	RALEP025C1C1C1C1

	9	7801523		2010-09-21	Kenderov, Stoyan	
	10	7801783	B2	2010-09-21	Kende et al.	
	11	7801985	B1	2010-09-21	Pitkow, Jim et al.	
	12	7802724		2010-09-28	Nohr, Steven Paul	
	13	7805140	B2	2010-09-28	Friday et al.	
	14	7805522	B2	2010-09-28	Schlüter et al.	
	15	7805606	B2	2010-09-28	Birger et al.	
	16	7809351	B1	2010-10-05	Panda et al.	
	17	7809372	B2	2010-10-05	Rajaniemi, Jaakko	
	18	7813746	B2	2010-10-12	Rajkotia, Purva R.	
	19	7817615	B1	2010-10-19	Breau et al.	

INFORMATION DISCLOSURE STATEMENT BY APPLICANT (Not for submission under 37 CFR 1.99)		
	Application Number	16907887
	Filing Date	2020-06-22
	First Named Inventor	RALEIGH, GREGORY
	Art Unit	2434
	Examiner Name	KAPLAN, BENJAMIN
	Attorney Docket Number	RALEP025C1C1C1C1

	20	7817983	B2	2010-10-19	Cassett et al.	
	21	7822837		2010-10-26	URBAN et al.	
	22	7822849	B2	2010-10-26	Titus	
	23	7826427	B2	2010-11-02	Sood et al.	
	24	7826607	B1	2010-11-02	De Carvalho Resende et al.	
	25	7835275	B1	2010-11-16	Swan et al.	
	26	7843831	B2	2010-11-30	Morrill et al.	
	27	7843843	B1	2010-11-30	Papp III et al.	
	28	7844034	B1	2010-11-30	Oh et al.	
	29	7844728	B2	2010-11-30	Anderson et al.	
	30	7848768		2010-12-07	OMORI et al.	

INFORMATION DISCLOSURE STATEMENT BY APPLICANT (Not for submission under 37 CFR 1.99)		
	Application Number	16907887
	Filing Date	2020-06-22
	First Named Inventor	RALEIGH, GREGORY
	Art Unit	2434
	Examiner Name	KAPLAN, BENJAMIN
	Attorney Docket Number	RALEP025C1C1C1C1

	31	7849161	B2	2010-12-07	Koch et al.	
	32	7849170	B1	2010-12-07	Hargens et al.	
	33	7849477	B2	2010-12-07	Cristofalo et al.	
	34	7853255	B2	2010-12-14	Karaoguz et al.	
	35	7853656	B2	2010-12-14	Yach et al.	
	36	7856226		2010-12-21	WONG, Ellis L. et al.	
	37	7860088	B2	2010-12-28	Lioy, Marcello	
	38	7865182		2011-01-04	Macaluso, Anthony G.	
	39	7865187	B2	2011-01-04	Ramer et al.	
	40	7868778		2011-01-11	KENWRIGHT, David Norris	
	41	7873001	B2	2011-01-18	Silver, Andrew	

INFORMATION DISCLOSURE STATEMENT BY APPLICANT (Not for submission under 37 CFR 1.99)		
	Application Number	16907887
	Filing Date	2020-06-22
	First Named Inventor	RALEIGH, GREGORY
	Art Unit	2434
	Examiner Name	KAPLAN, BENJAMIN
	Attorney Docket Number	RALEP025C1C1C1C1

	42	7873344		2011-01-18	BOWSER, Robert et al.	
	43	7873346	B2	2011-01-18	Petersson et al.	
	44	7873540	B2	2011-01-18	Arumugam, Avin	
	45	7873705		2011-01-18	KALISH, Dan	
	46	7877090		2011-01-25	Maes, Stephane H.	
	47	7881199		2011-02-01	KRSTULICH, Zlatko	
	48	7881697	B2	2011-02-01	Baker, Matthew Donald et al.	
	49	7882029		2011-02-01	WHITE, Craig R.	
	50	7882247	B2	2011-02-01	Sturniolo et al.	
	51	7882560	B2	2011-02-01	Kraemer et al.	
	52	7886047		2011-02-08	POTLURI, Dora	

INFORMATION DISCLOSURE STATEMENT BY APPLICANT (Not for submission under 37 CFR 1.99)		
	Application Number	16907887
	Filing Date	2020-06-22
	First Named Inventor	RALEIGH, GREGORY
	Art Unit	2434
	Examiner Name	KAPLAN, BENJAMIN
	Attorney Docket Number	RALEP025C1C1C1C1

	53	7889384	B2	2011-02-15	Armentrout et al.	
	54	7890084		2011-02-15	Dudziak, Thaddeus Jude et al.	
	55	7890111		2011-02-15	Bugenhagen, Michael K.	
	56	7894431	B2	2011-02-22	Goring et al.	
	57	7899039	B2	2011-03-01	Andreasen et al.	
	58	7899438	B2	2011-03-01	Baker, Matthew Donald et al.	
	59	7903553		2011-03-08	Liu, Enhui	
	60	7907970		2011-03-15	Park, Vincent D. et al.	
	61	7908358	B1	2011-03-15	Prasad et al.	
	62	7911975		2011-03-22	DROZ, Patrick et al.	
	63	7912025		2011-03-22	Pattenden, Christopher E. S. et al.	

INFORMATION DISCLOSURE STATEMENT BY APPLICANT (Not for submission under 37 CFR 1.99)		
	Application Number	16907887
	Filing Date	2020-06-22
	First Named Inventor	RALEIGH, GREGORY
	Art Unit	2434
	Examiner Name	KAPLAN, BENJAMIN
	Attorney Docket Number	RALEP025C1C1C1C1

	64	7912056		2011-03-22	BRASSEM, Wayne	
	65	7920529		2011-04-05	MAHLER, Roger et al.	
	66	7921463		2011-04-05	Sood, Kapil et al.	
	67	7925740	B2	2011-04-12	Nath et al.	
	68	7925778	B1	2011-04-12	Wijnands et al.	
	69	7929959	B2	2011-04-19	DeAtley, Dallas et al.	
	70	7929960		2011-04-19	MARTIN et al.	
	71	7929973		2011-04-19	Zavalkovsky, Arthur et al.	
	72	7930327	B2	2011-04-19	Craft David et al.	
	73	7930446	B2	2011-04-19	Kesselman, Alex et al.	
	74	7930553	B2	2011-04-19	Satarasinghe et al.	

INFORMATION DISCLOSURE STATEMENT BY APPLICANT (Not for submission under 37 CFR 1.99)		
	Application Number	16907887
	Filing Date	2020-06-22
	First Named Inventor	RALEIGH, GREGORY
	Art Unit	2434
	Examiner Name	KAPLAN, BENJAMIN
	Attorney Docket Number	RALEP025C1C1C1C1

	75	7933274	B2	2011-04-26	Verma et al.	
	76	7936736	B2	2011-05-03	Proctor Jr. et al.	
	77	7937069		2011-05-03	RASSAM, Frederic	
	78	7937450	B2	2011-05-03	Janik, Craig M.	
	79	7940685	B1	2011-05-10	Breslau, Lee et al.	
	80	7940751		2011-05-10	Hansen, Christopher J.	
	81	7941184		2011-05-10	PRENDERGAST et al.	
	82	7944948		2011-05-17	Chow, Albert T. et al.	
	83	7945238	B2	2011-05-17	Baker, Matthew Donald et al.	
	84	7945240		2011-05-17	KLOCK, Jacqueline et al.	
	85	7945945		2011-05-17	Graham, Richard et al.	

INFORMATION DISCLOSURE STATEMENT BY APPLICANT (Not for submission under 37 CFR 1.99)		
	Application Number	16907887
	Filing Date	2020-06-22
	First Named Inventor	RALEIGH, GREGORY
	Art Unit	2434
	Examiner Name	KAPLAN, BENJAMIN
	Attorney Docket Number	RALEP025C1C1C1C1

	86	7948952		2011-05-24	HURTTA, Tuija et al.	
	87	7948953	B2	2011-05-24	Melkote, Keerti G. et al.	
	88	7948968		2011-05-24	Voit, Eric A. et al.	
	89	7949529		2011-05-24	WEIDER et al.	
	90	7953808		2011-05-31	SHARP et al.	
	91	7953877	B2	2011-05-31	Vemula et al.	
	92	7957020		2011-06-07	MINE, Ryuta et al.	
	93	7957381	B2	2011-06-07	Clermidy et al.	
	94	7957511		2011-06-07	DRUDIS et al.	
	95	7958029	B1	2011-06-07	Bobich et al.	
	96	7962622		2011-06-14	Friend, John et al.	

INFORMATION DISCLOSURE STATEMENT BY APPLICANT (Not for submission under 37 CFR 1.99)		
	Application Number	16907887
	Filing Date	2020-06-22
	First Named Inventor	RALEIGH, GREGORY
	Art Unit	2434
	Examiner Name	KAPLAN, BENJAMIN
	Attorney Docket Number	RALEP025C1C1C1C1

	97	7965983		2011-06-21	SWAN, Tim et al.	
	98	7966405	B2	2011-06-21	Sundaresan et al.	
	99	7969950	B2	2011-06-28	Iyer, Pradeep J. et al.	
	100	7970350		2011-06-28	SHEYNMAN, Arnold	
	101	7970426		2011-06-28	Poe, Brian R. et al.	
	102	7974624		2011-07-05	Gallagher, Michael D. et al.	
	103	7975184		2011-07-05	GOFF et al.	
	104	7978627		2011-07-12	TAYLOR, William Scott et al.	
	105	7978686	B2	2011-07-12	Goyal et al.	
	106	7979069	B2	2011-07-12	Hupp et al.	
	107	7979889	B2	2011-07-12	Gladstone et al.	

INFORMATION DISCLOSURE STATEMENT BY APPLICANT (Not for submission under 37 CFR 1.99)		
	Application Number	16907887
	Filing Date	2020-06-22
	First Named Inventor	RALEIGH, GREGORY
	Art Unit	2434
	Examiner Name	KAPLAN, BENJAMIN
	Attorney Docket Number	RALEP025C1C1C1C1

	108	7979896	B2	2011-07-12	McMurtry et al.	
	109	7984130		2011-07-19	BOGINENI et al.	
	110	7984511	B2	2011-07-19	Kocher Paul et al.	
	111	7986935		2011-07-26	D'SOUZA et al.	
	112	7987496	B2	2011-07-26	Bryce et al.	
	113	7987510	B2	2011-07-26	Kocher et al.	
	114	7990049	B2	2011-08-02	Shioya, Shunsuke	
	115	8000276	B2	2011-08-16	Scherzer, Shimon et al.	
	116	8000318		2011-08-16	Wiley, William L. et al.	
	117	8005009		2011-08-23	McKee, Neil et al.	
	118	8005459		2011-08-23	BALSILLIE, Jim	

INFORMATION DISCLOSURE STATEMENT BY APPLICANT (Not for submission under 37 CFR 1.99)		
	Application Number	16907887
	Filing Date	2020-06-22
	First Named Inventor	RALEIGH, GREGORY
	Art Unit	2434
	Examiner Name	KAPLAN, BENJAMIN
	Attorney Docket Number	RALEP025C1C1C1C1

	119	8005726	B1	2011-08-23	Bao, Yulin	
	120	8005913	B1	2011-08-23	Carlander, Carrie	
	121	8005988		2011-08-23	MAES, Stephane H.	
	122	8010080		2011-08-30	THENTHIRUPERAI et al.	
	123	8010081		2011-08-30	ROSKOWSKI, Steve	
	124	8010082	B2	2011-08-30	Sutaria et al.	
	125	8010990	B2	2011-08-30	Ferguson et al.	
	126	8015133		2011-09-06	WU et al.	
	127	8015234		2011-09-06	LUM et al.	
	128	8015249	B2	2011-09-06	Nayak et al.	
	129	8019687		2011-09-13	WANG et al.	

INFORMATION DISCLOSURE STATEMENT BY APPLICANT (Not for submission under 37 CFR 1.99)		
	Application Number	16907887
	Filing Date	2020-06-22
	First Named Inventor	RALEIGH, GREGORY
	Art Unit	2434
	Examiner Name	KAPLAN, BENJAMIN
	Attorney Docket Number	RALEP025C1C1C1C1

	130	8019820		2011-09-13	Son, Giyeong et al.	
	131	8019846	B2	2011-09-13	Roelens et al.	
	132	8019868		2011-09-13	RAO, Goutham et al.	
	133	8019886	B2	2011-09-13	Harrang, Jeffrey Paul et al.	
	134	8023425	B2	2011-09-20	Raleigh	
	135	8024397		2011-09-20	ERICKSON, Richard R. et al.	
	136	8024424	B2	2011-09-20	Freimuth et al.	
	137	8027339	B2	2011-09-27	Short, Joel E. et al.	
	138	8031601	B2	2011-10-04	Feroz et al.	
	139	8032168	B2	2011-10-04	Ikaheimo, Jorma	
	140	8032409	B1	2011-10-04	Mikurak	

INFORMATION DISCLOSURE STATEMENT BY APPLICANT (Not for submission under 37 CFR 1.99)		
	Application Number	16907887
	Filing Date	2020-06-22
	First Named Inventor	RALEIGH, GREGORY
	Art Unit	2434
	Examiner Name	KAPLAN, BENJAMIN
	Attorney Docket Number	RALEP025C1C1C1C1

	141	8032899	B2	2011-10-04	Archer, Charles J. et al.	
	142	8036387	B2	2011-10-11	Kudelski et al.	
	143	8036600		2011-10-11	Garrett, Darrin et al.	
	144	8044792	B2	2011-10-25	Orr et al.	
	145	8045973	B2	2011-10-25	Chambers, Michael D.	
	146	8046449	B2	2011-10-25	Yoshiuchi, Hideya	
	147	8050275		2011-11-01	IYER, Jayaraman R.	
	148	8050690	B2	2011-11-01	Neeraj, Chawla	
	149	8050705	B2	2011-11-01	Sicher et al.	
	150	8059530		2011-11-15	Cole, Terry L.	
	151	8060017	B2	2011-11-15	Schlicht et al.	

INFORMATION DISCLOSURE STATEMENT BY APPLICANT (Not for submission under 37 CFR 1.99)		
	Application Number	16907887
	Filing Date	2020-06-22
	First Named Inventor	RALEIGH, GREGORY
	Art Unit	2434
	Examiner Name	KAPLAN, BENJAMIN
	Attorney Docket Number	RALEP025C1C1C1C1

	152	8060463		2011-11-15	Spiegel, Joel R.	
	153	8060603	B2	2011-11-15	CAUNTER et al.	
	154	8064418	B2	2011-11-22	Maki, Lasse	
	155	8064896		2011-11-22	BELL, Kris M. et al.	
	156	8065365	B2	2011-11-22	Saxena et al.	
	157	8068824		2011-11-29	SHAN, Xueshan et al.	
	158	8068829	B2	2011-11-29	Lemond, Eric et al.	
	159	8073427	B2	2011-12-06	Koch et al.	
	160	8073721		2011-12-06	Lewis, Lundy	
	161	8078140	B2	2011-12-13	Baker, Matthew Donald et al.	
	162	8078163	B2	2011-12-13	Lemond, Eric et al.	

INFORMATION DISCLOSURE STATEMENT BY APPLICANT (Not for submission under 37 CFR 1.99)		
	Application Number	16907887
	Filing Date	2020-06-22
	First Named Inventor	RALEIGH, GREGORY
	Art Unit	2434
	Examiner Name	KAPLAN, BENJAMIN
	Attorney Docket Number	RALEP025C1C1C1C1

	163	8085808	B2	2011-12-27	Brusca et al.	
	164	8086398	B2	2011-12-27	Sanchez et al.	
	165	8086497	B1	2011-12-27	Oakes III, Charles Lee	
	166	8086791	B2	2011-12-27	Caulkins, Jason	
	167	8090359		2012-01-03	Proctor Jr., James Arthur et al.	
	168	8090361	B2	2012-01-03	Hagan, Guy R.	
	169	8090616		2012-01-03	Proctor Jr., James Arthur et al.	
	170	8091087	B2	2012-01-03	Ali et al.	
	171	8094551		2012-01-10	HUBER, Kurt Donald et al.	
	172	8095112	B2	2012-01-10	Chow, Richard et al.	
	173	8095124	B2	2012-01-10	Balia, Hinal K.	

INFORMATION DISCLOSURE STATEMENT BY APPLICANT (Not for submission under 37 CFR 1.99)		
	Application Number	16907887
	Filing Date	2020-06-22
	First Named Inventor	RALEIGH, GREGORY
	Art Unit	2434
	Examiner Name	KAPLAN, BENJAMIN
	Attorney Docket Number	RALEP025C1C1C1C1

	174	8095640	B2	2012-01-10	Guingo et al.	
	175	8095666		2012-01-10	SCHMIDT et al.	
	176	8098579		2012-01-17	Ray, Amar N. et al.	
	177	8099077		2012-01-17	CHOWDHURY et al.	
	178	8099517		2012-01-17	JIA et al.	
	179	8102814		2012-01-24	RAHMAN, Shahriar I. et al.	
	180	8103285	B2	2012-01-24	Kalhan, Amit	
	181	8104080	B2	2012-01-24	Burns et al.	
	182	8107953	B2	2012-01-31	Zimmerman et al.	
	183	8108520		2012-01-31	Ruutu, Jussi et al.	
	184	8108680	B2	2012-01-31	Murray	

INFORMATION DISCLOSURE STATEMENT BY APPLICANT (Not for submission under 37 CFR 1.99)		
	Application Number	16907887
	Filing Date	2020-06-22
	First Named Inventor	RALEIGH, GREGORY
	Art Unit	2434
	Examiner Name	KAPLAN, BENJAMIN
	Attorney Docket Number	RALEP025C1C1C1C1

	185	8112435	B2	2012-02-07	Epstein et al.	
	186	8116223		2012-02-14	TIAN, Dan et al.	
	187	8116749		2012-02-14	Proctor Jr., James Arthur et al.	
	188	8116781	B2	2012-02-14	Chen, Xixian et al.	
	189	8122128		2012-02-21	Burke, II, Robert M. et al.	
	190	8122249		2012-02-21	Falk, Rainer et al.	
	191	8125897	B2	2012-02-28	Ray et al.	
	192	8126123		2012-02-28	Cai, Yigang et al.	
	193	8126396	B2	2012-02-28	Bennett, James D.	
	194	8126476	B2	2012-02-28	Vardi, Yosef et al.	
	195	8126722		2010-02-28	ROBB, Terence Alan et al.	

INFORMATION DISCLOSURE STATEMENT BY APPLICANT (Not for submission under 37 CFR 1.99)		
	Application Number	16907887
	Filing Date	2020-06-22
	First Named Inventor	RALEIGH, GREGORY
	Art Unit	2434
	Examiner Name	KAPLAN, BENJAMIN
	Attorney Docket Number	RALEP025C1C1C1C1

	196	8130793	B2	2012-03-06	Edwards, Stephen K. et al.	
	197	8131256		2012-03-06	MARTTI, Jyrki et al.	
	198	8131281	B1	2012-03-06	Hildner et al.	
	199	8131840	B1	2012-03-06	Denker, Richard E.	
	200	8131858	B2	2012-03-06	Agulnik et al.	
	201	8132256	B2	2012-03-06	Bari, Farooq	
	202	8134954	B2	2012-03-13	Godfrey, James A. et al.	
	203	8135388		2012-03-13	Gailloux, Michael A. et al.	
	204	8135392		2012-03-13	MARCELLINO et al.	
	205	8135657		2012-03-13	Kapoor, Harsh et al.	
	206	8140690	B2	2012-03-20	Ly et al.	

INFORMATION DISCLOSURE STATEMENT BY APPLICANT (Not for submission under 37 CFR 1.99)		
	Application Number	16907887
	Filing Date	2020-06-22
	First Named Inventor	RALEIGH, GREGORY
	Art Unit	2434
	Examiner Name	KAPLAN, BENJAMIN
	Attorney Docket Number	RALEP025C1C1C1C1

	207	8144591		2012-03-27	GHAI et al.	
	208	8145194	B2	2012-03-27	Yoshikawa et al.	
	209	8146142	B2	2012-03-27	Lortz et al.	
	210	8149748	B2	2012-04-03	Bata et al.	
	211	8149823		2012-04-03	Turcan, Diane Brown et al.	
	212	8150394	B2	2012-04-03	Bianconi et al.	
	213	8150431		2012-04-03	Wolovitz, Lionel et al.	
	214	8151205	B2	2012-04-03	Follmann et al.	
	215	8155155		2012-04-10	Chow, Albert T. et al.	
	216	8155620		2012-04-10	Wang, Jun et al.	
	217	8155666	B2	2012-04-10	Alizadeh-Shabdiz, Farshid	

INFORMATION DISCLOSURE STATEMENT BY APPLICANT (Not for submission under 37 CFR 1.99)		
	Application Number	16907887
	Filing Date	2020-06-22
	First Named Inventor	RALEIGH, GREGORY
	Art Unit	2434
	Examiner Name	KAPLAN, BENJAMIN
	Attorney Docket Number	RALEP025C1C1C1C1

	218	8155670		2012-04-10	Fullam, Scott et al.	
	219	8156206		2012-04-10	KILEY, Kevin J. et al.	
	220	8159520	B1	2012-04-17	Dhanoa et al.	
	221	8160015		2012-04-17	RASHID, Mohammed H. et al.	
	222	8160056	B2	2012-04-17	Van der Merwe et al.	
	223	8160598	B2	2012-04-17	Savoor, Raghvendra	
	224	8165576		2012-04-24	Raju, Vishwanath et al.	
	225	8166040	B2	2012-04-24	Brindisi, Richard G. et al.	
	226	8166554	B2	2012-04-24	John, Pramod	
	227	8170553		2012-05-01	BENNETT, James D.	
	228	8174378	B2	2012-05-08	Richman et al.	

INFORMATION DISCLOSURE STATEMENT BY APPLICANT (Not for submission under 37 CFR 1.99)		
	Application Number	16907887
	Filing Date	2020-06-22
	First Named Inventor	RALEIGH, GREGORY
	Art Unit	2434
	Examiner Name	KAPLAN, BENJAMIN
	Attorney Docket Number	RALEP025C1C1C1C1

	229	8174970	B2	2012-05-12	Adamczyk, Maria et al.	
	230	8175574	B1	2012-05-08	Panda et al.	
	231	8180333	B1	2012-05-15	Wells et al.	
	232	8180881	B2	2012-05-15	Seo et al.	
	233	8180886	B2	2012-05-15	Overcash et al.	
	234	8184530		2012-05-22	SWAN, Tim L. et al.	
	235	8184590		2012-05-22	Rosenblatt, Ariel	
	236	8185088	B2	2012-05-22	Klein et al.	
	237	8185093		2012-05-22	Jheng, Yu-Syuan et al.	
	238	8185127	B1	2012-05-22	Cai et al.	
	239	8185152		2012-05-22	GOLDNER, Alla	

INFORMATION DISCLOSURE STATEMENT BY APPLICANT (Not for submission under 37 CFR 1.99)		
	Application Number	16907887
	Filing Date	2020-06-22
	First Named Inventor	RALEIGH, GREGORY
	Art Unit	2434
	Examiner Name	KAPLAN, BENJAMIN
	Attorney Docket Number	RALEP025C1C1C1C1

	240	8185158		2012-05-22	Tamura, Motoshi et al.	
	241	8190087	B2	2012-05-29	Fisher et al.	
	242	8190122	B1	2012-05-29	Alexander et al.	
	243	8190675		2012-05-29	TRIBBETT, David	
	244	8191106	B2	2012-05-29	Choyi et al.	
	245	8191116		2012-05-29	Gazzard, Daryl	
	246	8191124	B2	2012-05-29	Wynn et al.	
	247	8194549	B2	2012-06-05	Huber et al.	
	248	8194553		2012-06-05	LIANG, Zhi Yong et al.	
	249	8194572	B2	2012-06-05	Horvath et al.	
	250	8194581	B1	2012-06-05	Schroeder et al.	

INFORMATION DISCLOSURE STATEMENT BY APPLICANT (Not for submission under 37 CFR 1.99)		
	Application Number	16907887
	Filing Date	2020-06-22
	First Named Inventor	RALEIGH, GREGORY
	Art Unit	2434
	Examiner Name	KAPLAN, BENJAMIN
	Attorney Docket Number	RALEP025C1C1C1C1

	251	8195093	B2	2012-06-05	Garrett et al.	
	252	8195153	B1	2012-06-05	Frencel et al.	
	253	8195163	B2	2012-06-05	Gisby, Doug et al.	
	254	8195661	B2	2012-06-05	Kalavade, Asawaree	
	255	8196199	B2	2012-06-05	Hrastar et al.	
	256	8200163	B2	2012-06-12	Hoffman, George E.	
	257	8200200	B1	2012-06-12	Belser et al.	
	258	8200509	B2	2012-06-12	Kenedy, Andrew Alexander et al.	
	259	8200775		2012-06-12	MOORE, James F.	
	260	8200818	B2	2012-06-12	Freund et al.	
	261	8204190	B2	2012-06-19	Bang et al.	

INFORMATION DISCLOSURE STATEMENT BY APPLICANT (Not for submission under 37 CFR 1.99)		
	Application Number	16907887
	Filing Date	2020-06-22
	First Named Inventor	RALEIGH, GREGORY
	Art Unit	2434
	Examiner Name	KAPLAN, BENJAMIN
	Attorney Docket Number	RALEP025C1C1C1C1

	262	8204505	B2	2012-06-19	Jin et al.	
	263	8208788	B2	2012-06-26	Ando et al.	
	264	8208919		2012-06-26	KOTECHA, Lalit Ratilal	
	265	8213296		2012-07-03	SHANNON, Frank M. et al.	
	266	8213363		2012-07-03	Ying, Wen-Ping et al.	
	267	8214536		2012-07-03	ZHAO, Wen	
	268	8214890	B2	2012-07-03	Kirovski et al.	
	269	8219134	B2	2012-07-10	Maharajh et al.	
	270	8223655	B2	2012-07-17	Heinz et al.	
	271	8223741	B	2012-07-17	Bartlett et al.	
	272	8224382		2012-07-17	Bultman, Michael J.	

INFORMATION DISCLOSURE STATEMENT BY APPLICANT (Not for submission under 37 CFR 1.99)		
	Application Number	16907887
	Filing Date	2020-06-22
	First Named Inventor	RALEIGH, GREGORY
	Art Unit	2434
	Examiner Name	KAPLAN, BENJAMIN
	Attorney Docket Number	RALEP025C1C1C1C1

	273	8224773		2012-07-17	Spiegel, Joel R.	
	274	8228818	B2	2012-07-24	Chase et al.	
	275	8229394	B2	2012-07-24	Karlberg, Johan	
	276	8229914	B2	2012-07-24	Ramer et al.	
	277	8233433	B2	2012-07-31	Kalhan, Amit	
	278	8233883		2012-07-31	De Froment, Eric	
	279	8233895		2012-07-31	Tysowski, Piotr Konrad	
	280	8234583	B2	2012-07-31	Sloo et al.	
	281	8238287		2012-08-07	Gopi, Paramesh et al.	
	282	8238913	B1	2012-08-07	Bhattacharyya et al.	
	283	8239520		2012-08-07	GRAH, Adrian	

INFORMATION DISCLOSURE STATEMENT BY APPLICANT (Not for submission under 37 CFR 1.99)		
	Application Number	16907887
	Filing Date	2020-06-22
	First Named Inventor	RALEIGH, GREGORY
	Art Unit	2434
	Examiner Name	KAPLAN, BENJAMIN
	Attorney Docket Number	RALEP025C1C1C1C1

	284	8242959	B2	2012-08-14	Mia, Rashidus S. et al.	
	285	8244241		2012-08-14	Montemurro, Michael	
	286	8249601	B2	2012-08-21	Emberson et al.	
	287	8254880	B2	2012-08-28	Aaltonen et al.	
	288	8254915		2012-08-28	Kozisek, Steven E.	
	289	8255515		2012-08-28	MELMAN, David et al.	
	290	8255534	B2	2012-08-28	Assadzadeh, Alireza	
	291	8255689		2012-08-28	KIM, Eun Ah et al.	
	292	8259692	B2	2012-09-04	Bajko, Gabor	
	293	8260252	B2	2012-09-04	Agarwal	
	294	8264965	B2	2012-09-11	Dolganow et al.	

INFORMATION DISCLOSURE STATEMENT BY APPLICANT (Not for submission under 37 CFR 1.99)		
	Application Number	16907887
	Filing Date	2020-06-22
	First Named Inventor	RALEIGH, GREGORY
	Art Unit	2434
	Examiner Name	KAPLAN, BENJAMIN
	Attorney Docket Number	RALEP025C1C1C1C1

	295	8265004		2012-09-11	Toutonghi, Michael J.	
	296	8266249	B2	2012-09-11	Hu	
	297	8266681		2012-09-11	Deshpande, Sumit B. et al.	
	298	8270955	B2	2012-09-18	Ramer et al.	
	299	8270972	B2	2012-09-18	Otting, Marcia J. et al.	
	300	8271025	B2	2012-09-18	Brisebois et al.	

If you wish to add additional U.S. Patent citation information please click the Add button. Add

U.S.PATENT APPLICATION PUBLICATIONS Remove

Examiner Initial*	Cite No	Publication Number	Kind Code[1]	Publication Date	Name of Patentee or Applicant of cited Document	Pages,Columns,Lines where Relevant Passages or Relevant Figures Appear
	1					

If you wish to add additional U.S. Published Application citation information please click the Add button. Add

FOREIGN PATENT DOCUMENTS Remove

Examiner Initial*	Cite No	Foreign Document Number[3]	Country Code[2] ¡	Kind Code[4]	Publication Date	Name of Patentee or Applicant of cited Document	Pages,Columns,Lines where Relevant Passages or Relevant Figures Appear	T[5]

INFORMATION DISCLOSURE STATEMENT BY APPLICANT (Not for submission under 37 CFR 1.99)		
	Application Number	16907887
	Filing Date	2020-06-22
	First Named Inventor	RALEIGH, GREGORY
	Art Unit	2434
	Examiner Name	KAPLAN, BENJAMIN
	Attorney Docket Number	RALEP025C1C1C1C1

	1							

If you wish to add additional Foreign Patent Document citation information please click the Add button Add

NON-PATENT LITERATURE DOCUMENTS Remove

Examiner Initials*	Cite No	Include name of the author (in CAPITAL LETTERS), title of the article (when appropriate), title of the item (book, magazine, journal, serial, symposium, catalog, etc), date, pages(s), volume-issue number(s), publisher, city and/or country where published.	T[5]
	1		

If you wish to add additional non-patent literature document citation information please click the Add button Add

EXAMINER SIGNATURE

Examiner Signature	/BENJAMIN A KAPLAN/	Date Considered	06/19/2021

*EXAMINER: Initial if reference considered, whether or not citation is in conformance with MPEP 609. Draw line through a citation if not in conformance and not considered. Include copy of this form with next communication to applicant.

[1] See Kind Codes of USPTO Patent Documents at www.USPTO.GOV or MPEP 901.04. [2] Enter office that issued the document, by the two-letter code (WIPO Standard ST.3). [3] For Japanese patent documents, the indication of the year of the reign of the Emperor must precede the serial number of the patent document. [4] Kind of document by the appropriate symbols as indicated on the document under WIPO Standard ST.16 if possible. [5] Applicant is to place a check mark here if English language translation is attached.

ALL REFERENCES CONSIDERED EXCEPT WHERE LINED THROUGH. /B.A.K/

INFORMATION DISCLOSURE STATEMENT BY APPLICANT (Not for submission under 37 CFR 1.99)		
	Application Number	16907887
	Filing Date	2020-06-22
	First Named Inventor	RALEIGH, GREGORY
	Art Unit	2434
	Examiner Name	KAPLAN, BENJAMIN
	Attorney Docket Number	RALEP025C1C1C1C1

CERTIFICATION STATEMENT

Please see 37 CFR 1.97 and 1.98 to make the appropriate selection(s):

That each item of information contained in the information disclosure statement was first cited in any communication from a foreign patent office in a counterpart foreign application not more than three months prior to the filing of the information disclosure statement. See 37 CFR 1.97(e)(1).

OR

☐ That no item of information contained in the information disclosure statement was cited in a communication from a foreign patent office in a counterpart foreign application, and, to the knowledge of the person signing the certification after making reasonable inquiry, no item of information contained in the information disclosure statement was known to any individual designated in 37 CFR 1.56(c) more than three months prior to the filing of the information disclosure statement. See 37 CFR 1.97(e)(2).

See attached certification statement.

The fee set forth in 37 CFR 1.17 (p) has been submitted herewith.

X A certification statement is not submitted herewith.

SIGNATURE

A signature of the applicant or representative is required in accordance with CFR 1.33, 10.18. Please see CFR 1.4(d) for the form of the signature.

Signature	/James E. Harris/	Date (YYYY-MM-DD)	2021-02-03
Name/Print	James E. Harris	Registration Number	40013

This collection of information is required by 37 CFR 1.97 and 1.98. The information is required to obtain or retain a benefit by the public which is to file (and by the USPTO to process) an application. Confidentiality is governed by 35 U.S.C. 122 and 37 CFR 1.14. This collection is estimated to take 1 hour to complete, including gathering, preparing and submitting the completed application form to the USPTO. Time will vary depending upon the individual case. Any comments on the amount of time you require to complete this form and/or suggestions for reducing this burden, should be sent to the Chief Information Officer, U.S. Patent and Trademark Office, U.S. Department of Commerce, P.O. Box 1450, Alexandria, VA 22313-1450. DO NOT SEND FEES OR COMPLETED FORMS TO THIS ADDRESS. **SEND TO: Commissioner for Patents, P.O. Box 1450, Alexandria, VA 22313-1450.**

Privacy Act Statement

The Privacy Act of 1974 (P.L. 93-579) requires that you be given certain information in connection with your submission of the attached form related to a patent application or patent. Accordingly, pursuant to the requirements of the Act, please be advised that: (1) the general authority for the collection of this information is 35 U.S.C. 2(b)(2); (2) furnishing of the information solicited is voluntary; and (3) the principal purpose for which the information is used by the U.S. Patent and Trademark Office is to process and/or examine your submission related to a patent application or patent. If you do not furnish the requested information, the U.S. Patent and Trademark Office may not be able to process and/or examine your submission, which may result in termination of proceedings or abandonment of the application or expiration of the patent.

The information provided by you in this form will be subject to the following routine uses:

1. The information on this form will be treated confidentially to the extent allowed under the Freedom of Information Act (5 U.S.C. 552) and the Privacy Act (5 U.S.C. 552a). Records from this system of records may be disclosed to the Department of Justice to determine whether the Freedom of Information Act requires disclosure of these record s.

2. A record from this system of records may be disclosed, as a routine use, in the course of presenting evidence to a court, magistrate, or administrative tribunal, including disclosures to opposing counsel in the course of settlement negotiations.

3. A record in this system of records may be disclosed, as a routine use, to a Member of Congress submitting a request involving an individual, to whom the record pertains, when the individual has requested assistance from the Member with respect to the subject matter of the record.

4. A record in this system of records may be disclosed, as a routine use, to a contractor of the Agency having need for the information in order to perform a contract. Recipients of information shall be required to comply with the requirements of the Privacy Act of 1974, as amended, pursuant to 5 U.S.C. 552a(m).

5. A record related to an International Application filed under the Patent Cooperation Treaty in this system of records may be disclosed, as a routine use, to the International Bureau of the World Intellectual Property Organization, pursuant to the Patent Cooperation Treaty.

6. A record in this system of records may be disclosed, as a routine use, to another federal agency for purposes of National Security review (35 U.S.C. 181) and for review pursuant to the Atomic Energy Act (42 U.S.C. 218(c)).

7. A record from this system of records may be disclosed, as a routine use, to the Administrator, General Services, or his/her designee, during an inspection of records conducted by GSA as part of that agency's responsibility to recommend improvements in records management practices and programs, under authority of 44 U.S.C. 2904 and 2906. Such disclosure shall be made in accordance with the GSA regulations governing inspection of records for this purpose, and any other relevant (i.e., GSA or Commerce) directive. Such disclosure shall not be used to make determinations about individuals.

8. A record from this system of records may be disclosed, as a routine use, to the public after either publication of the application pursuant to 35 U.S.C. 122(b) or issuance of a patent pursuant to 35 U.S.C. 151. Further, a record may be disclosed, subject to the limitations of 37 CFR 1.14, as a routine use, to the public if the record was filed in an application which became abandoned or in which the proceedings were terminated and which application is referenced by either a published application, an application open to public inspections or an issued patent.

9. A record from this system of records may be disclosed, as a routine use, to a Federal, State, or local law enforcement agency, if the USPTO becomes aware of a violation or potential violation of law or regulation.

ALL REFERENCES CONSIDERED EXCEPT WHERE LINED THROUGH. /B.A.K/

Doc code: IDS
Doc description: Information Disclosure Statement (IDS) Filed

PTO/SB/08a (02-18)
Approved for use through 11/30/2020. OMB 0651-0031
U.S. Patent and Trademark Office; U.S. DEPARTMENT OF COMMERCE
Under the Paperwork Reduction Act of 1995, no persons are required to respond to a collection of information unless it contains a valid OMB control number.

INFORMATION DISCLOSURE STATEMENT BY APPLICANT (Not for submission under 37 CFR 1.99)		
	Application Number	16907887
	Filing Date	2020-06-22
	First Named Inventor	RALEIGH, GREGORY
	Art Unit	2434
	Examiner Name	KAPLAN, BENJAMIN
	Attorney Docket Number	RALEP025C1C1C1C1

U.S.PATENTS Remove

Examiner Initial*	Cite No	Patent Number	Kind Code[1]	Issue Date	Name of Patentee or Applicant of cited Document	Pages,Columns,Lines where Relevant Passages or Relevant Figures Appear
	1	8271045		2012-09-18	Parolkar, Satish et al.	
	2	8271049		2012-09-18	SILVER, Andrew et al.	
	3	8271992	B2	2012-09-18	Chatley, Scott P. et al.	
	4	8275415	B2	2012-09-25	Huslak, Nicholas S.	
	5	8275830	B2	2012-09-25	Raleigh	
	6	8279067		2012-10-02	BERGER, Thomas R. et al.	
	7	8279864		2012-10-02	Wood, Daniel M.	
	8	8280354		2012-10-02	Smith, Christopher et al.	

ALL REFERENCES CONSIDERED EXCEPT WHERE LINED THROUGH. /B.A.K/

INFORMATION DISCLOSURE STATEMENT BY APPLICANT (Not for submission under 37 CFR 1.99)		
	Application Number	16907887
	Filing Date	2020-06-22
	First Named Inventor	RALEIGH, GREGORY
	Art Unit	2434
	Examiner Name	KAPLAN, BENJAMIN
	Attorney Docket Number	RALEP025C1C1C1C1

	9	8284740		2012-10-09	O'CONNOR, Dennis M.	
	10	8285249	B2	2012-10-09	Baker, Matthew Donald et al.	
	11	8285992	B2	2012-10-09	Mathur et al.	
	12	8290820	B2	2012-10-16	Plastina et al.	
	13	8291238		2012-10-16	GINTER, Karl L. et al.	
	14	8291439	B2	2012-10-16	Jethi et al.	
	15	8296404		2012-10-23	McDysan, Dave et al.	
	16	8300575	B2	2012-10-30	Willars, Per	
	17	8306518		2012-11-06	GAILLOUX, Michael A.	
	18	8306741	B2	2012-11-06	Tu, Ihung	
	19	8307067	B2	2012-11-06	Ryan, Nicholas M.	

INFORMATION DISCLOSURE STATEMENT BY APPLICANT (Not for submission under 37 CFR 1.99)		
	Application Number	16907887
	Filing Date	2020-06-22
	First Named Inventor	RALEIGH, GREGORY
	Art Unit	2434
	Examiner Name	KAPLAN, BENJAMIN
	Attorney Docket Number	RALEP025C1C1C1C1

	20	8310943	B2	2012-11-13	Mehta et al.	
	21	8315198	B2	2012-11-20	Corneille et al.	
	22	8315593	B2	2012-11-20	Gallant et al.	
	23	8315594		2012-11-20	Mauser, Edward Ronald et al.	
	24	8315718		2012-11-20	Caffrey, Paul Oliver et al.	
	25	8315999	B2	2012-11-20	Chatley, Scott P. et al.	
	26	8320244	B2	2012-11-27	Muqattash et al.	
	27	8320949		2012-11-27	Matta, Sudheer Poorna Chandra	
	28	8325638		2012-12-04	Jin, Haipeng et al.	
	29	8325906	B2	2012-12-04	Fullarton et al.	
	30	8326319	B2	2012-12-04	Davis, Richard W.	

INFORMATION DISCLOSURE STATEMENT BY APPLICANT (Not for submission under 37 CFR 1.99)		
	Application Number	16907887
	Filing Date	2020-06-22
	First Named Inventor	RALEIGH, GREGORY
	Art Unit	2434
	Examiner Name	KAPLAN, BENJAMIN
	Attorney Docket Number	RALEP025C1C1C1C1

	31	8326828	B2	2012-12-04	Zhou et al.	
	32	8331223	B2	2012-12-11	Hill et al.	
	33	8331293		2012-12-11	Sood, Kapil	
	34	8332375		2012-12-11	Chatley, Scott P. et al.	
	35	8339991	B2	2012-12-25	Biswas et al.	
	36	8340625	B1	2012-12-25	Johnson et al.	
	37	8340628	B2	2012-12-25	Taylor et al.	
	38	8340678	B1	2012-12-25	Pandey, Vinod	
	39	8340718		2012-12-25	Colonna, Massimo et al.	
	40	8346210	B2	2013-01-01	Balsan et al.	
	41	8346225	B2	2013-01-01	Raleigh	

INFORMATION DISCLOSURE STATEMENT BY APPLICANT (Not for submission under 37 CFR 1.99)		
	Application Number	16907887
	Filing Date	2020-06-22
	First Named Inventor	RALEIGH, GREGORY
	Art Unit	2434
	Examiner Name	KAPLAN, BENJAMIN
	Attorney Docket Number	RALEP025C1C1C1C1

	42	8346923	B2	2013-01-01	Rowles et al.	
	43	8347104	B2	2013-01-01	Pathiyal, Krishna K.	
	44	8347362		2013-01-01	Cai, Yigang et al.	
	45	8347378	B2	2013-01-01	Merkin et al.	
	46	8350700		2013-01-08	Fast, Raymond D. et al.	
	47	8351592	B2	2013-01-08	Freeny Jr et al.	
	48	8351898	B2	2013-01-08	Raleigh	
	49	8352360	B2	2013-01-08	De Judicibus et al.	
	50	8352980		2013-01-08	Howcroft, Jerald Robert	
	51	8353001		2013-01-08	Herrod, Allan	
	52	8355570	B2	2013-01-15	Karsanbhai et al.	

INFORMATION DISCLOSURE STATEMENT BY APPLICANT (Not for submission under 37 CFR 1.99)		
	Application Number	16907887
	Filing Date	2020-06-22
	First Named Inventor	RALEIGH, GREGORY
	Art Unit	2434
	Examiner Name	KAPLAN, BENJAMIN
	Attorney Docket Number	RALEP025C1C1C1C1

	53	8355696	B1	2013-01-15	Olding et al.	
	54	8356336	B2	2013-01-15	Johnston, Keith et al.	
	55	8358638	B2	2013-01-22	Scherzer, Tamir et al.	
	56	8358975	B2	2013-01-22	Bahl et al.	
	57	8363658		2013-01-29	Delker, Jason R. et al.	
	58	8363799	B2	2013-01-29	Gruchala et al.	
	59	8364089		2013-01-29	PHILLIPS, Derek	
	60	8364806		2013-01-29	Short, Joel E. et al.	
	61	8369274	B2	2013-02-05	Sawai, Ryo	
	62	8370477		2013-02-05	Short, Joel E. et al.	
	63	8370483	B	2013-02-05	Choong Jason et al.	

INFORMATION DISCLOSURE STATEMENT BY APPLICANT (Not for submission under 37 CFR 1.99)		
	Application Number	16907887
	Filing Date	2020-06-22
	First Named Inventor	RALEIGH, GREGORY
	Art Unit	2434
	Examiner Name	KAPLAN, BENJAMIN
	Attorney Docket Number	RALEP025C1C1C1C1

	64	8374090		2013-02-12	Morrill, Robert J. et al.	
	65	8374592		2013-02-12	Proctor, Jr. James A. et al.	
	66	8375128	B2	2013-02-12	Tofighbakhsh et al.	
	67	8375136	B2	2013-02-12	Roman et al.	
	68	8380247	B2	2013-02-19	Engstrom	
	69	8385199	B1	2013-02-26	Coward et al.	
	70	8385896		2013-02-26	Proctor Jr., James A. et al.	
	71	8385964	B2	2013-02-26	Haney, Richard D.	
	72	8385975	B2	2013-02-26	Forutanpour et al.	
	73	8386386		2013-02-26	Zhu, Kevin	
	74	8391262	B2	2013-03-05	Maki et al.	

INFORMATION DISCLOSURE STATEMENT BY APPLICANT (Not for submission under 37 CFR 1.99)		
	Application Number	16907887
	Filing Date	2020-06-22
	First Named Inventor	RALEIGH, GREGORY
	Art Unit	2434
	Examiner Name	KAPLAN, BENJAMIN
	Attorney Docket Number	RALEP025C1C1C1C1

	75	8391834	B2	2013-03-05	Raleigh	
	76	8392982	B2	2013-03-05	Harris et al.	
	77	8396458	B	2013-03-12	Raleigh, Gregory G.	
	78	8396929		2013-03-12	Helfman, Nadav et al.	
	79	8401968	B1	2013-03-19	Schattauer et al.	
	80	8402165	B2	2013-03-19	Deu-Ngoc et al.	
	81	8402540		2013-03-19	Kapoor, Harsh et al.	
	82	8406427		2013-03-26	Chand, Naresh et al.	
	83	8406736	B2	2013-03-26	Das et al.	
	84	8407763	B2	2013-03-26	Weller et al.	
	85	8411587		2013-04-02	Curtis, William et al.	

INFORMATION DISCLOSURE STATEMENT BY APPLICANT (Not for submission under 37 CFR 1.99)		
	Application Number	16907887
	Filing Date	2020-06-22
	First Named Inventor	RALEIGH, GREGORY
	Art Unit	2434
	Examiner Name	KAPLAN, BENJAMIN
	Attorney Docket Number	RALEP025C1C1C1C1

	86	8411691	B2	2013-04-02	Aggarwal	
	87	8412798	B1	2013-04-02	Wang, Frank C.	
	88	8413245	B2	2013-04-02	Kraemer et al.	
	89	8418168	B2	2013-04-09	Tyhurst et al.	
	90	8422988		2013-04-16	KESHAV, Srinivasan	
	91	8423016		2013-04-16	BUCKLEY, Adrian et al.	
	92	8429403		2013-04-23	Moret, Eric et al.	
	93	8437734		2013-05-07	Ray, Amar N. et al.	
	94	8442015	B2	2013-05-14	Behzad et al.	
	95	8446831	B2	2013-05-21	Kwan et al.	
	96	8447324		2013-05-21	Shuman, Mohammed Ataur et al.	

INFORMATION DISCLOSURE STATEMENT BY APPLICANT (Not for submission under 37 CFR 1.99)		
	Application Number	16907887
	Filing Date	2020-06-22
	First Named Inventor	RALEIGH, GREGORY
	Art Unit	2434
	Examiner Name	KAPLAN, BENJAMIN
	Attorney Docket Number	RALEP025C1C1C1C1

	97	8447607	B2	2013-05-21	Weider, Chris et al.	
	98	8447980		2013-05-21	Godfrey, James A. et al.	
	99	8448015	B2	2013-05-21	Gerhart, David	
	100	8452858	B2	2013-05-28	Wu et al.	
	101	8457603	B2	2013-06-04	EL-KADRI et al.	
	102	8461958	B2	2013-06-11	Saenz et al.	
	103	8463194	B2	2013-06-11	Erlenback et al.	
	104	8463232	B2	2013-06-11	Tuli et al.	
	105	8468337	B2	2013-06-18	Gaur, Santosh P. et al.	
	106	8472371		2013-06-25	Bari, Farooq et al.	
	107	8477778		2013-07-02	Lehmann Jr., L. Curtis et al.	

INFORMATION DISCLOSURE STATEMENT BY APPLICANT (Not for submission under 37 CFR 1.99)		
	Application Number	16907887
	Filing Date	2020-06-22
	First Named Inventor	RALEIGH, GREGORY
	Art Unit	2434
	Examiner Name	KAPLAN, BENJAMIN
	Attorney Docket Number	RALEP025C1C1C1C1

	108	8478840	B2	2013-07-02	Skutela et al.	
	109	8483057	B2	2013-07-09	Cuervo	
	110	8483135		2013-07-09	Cai, Yigang et al.	
	111	8483694	B2	2013-07-09	Lewis et al.	
	112	8484327	B2	2013-07-09	Werner et al.	
	113	8488597	B2	2013-07-16	Nie et al.	
	114	8489110	B2	2013-07-16	Frank et al.	
	115	8489720	B1	2013-07-16	Morford, Michael et al.	
	116	8494559	B1	2013-07-23	Malmi	
	117	8495181	B2	2013-07-23	Venkatraman et al.	
	118	8495207	B2	2013-07-23	Lee	

INFORMATION DISCLOSURE STATEMENT BY APPLICANT (Not for submission under 37 CFR 1.99)		
	Application Number	16907887
	Filing Date	2020-06-22
	First Named Inventor	RALEIGH, GREGORY
	Art Unit	2434
	Examiner Name	KAPLAN, BENJAMIN
	Attorney Docket Number	RALEP025C1C1C1C1

	119	8495227		2013-07-23	Kaminsky, David L. et al.	
	120	8495360		2013-07-23	Falk, Rainer et al.	
	121	8495700	B2	2013-07-23	Shahbazi	
	122	8495743	B2	2013-07-23	Kraemer et al.	
	123	8499087	B2	2013-07-30	Hu, Qingmin	
	124	8500533	B2	2013-08-06	Lutnick et al.	
	125	8503358	B2	2013-08-06	Hanson et al.	
	126	8503455	B2	2013-08-06	Heikens, Heico	
	127	8504032	B2	2013-08-06	Lott et al.	
	128	8504574	B2	2013-08-06	Dvorak et al.	
	129	8504687	B2	2013-08-06	Maffione et al.	

INFORMATION DISCLOSURE STATEMENT BY APPLICANT (Not for submission under 37 CFR 1.99)		
	Application Number	16907887
	Filing Date	2020-06-22
	First Named Inventor	RALEIGH, GREGORY
	Art Unit	2434
	Examiner Name	KAPLAN, BENJAMIN
	Attorney Docket Number	RALEP025C1C1C1C1

	130	8504690	B2	2013-08-06	Shah et al.	
	131	8504729		2013-08-06	Pezzutti, David A.	
	132	8505073	B2	2013-08-06	Taglienti et al.	
	133	8509082	B2	2013-08-13	Heinz, John M. et al.	
	134	8514927	B2	2013-08-20	Sundararajan et al.	
	135	8516552	B2	2013-08-20	Raleigh	
	136	8520589		2013-08-27	Bhatt, Yogesh et al.	
	137	8520595	B2	2013-08-27	Yadav et al.	
	138	8521110		2013-08-27	Rofougaran, Ahmadreza	
	139	8521775	B1	2013-08-27	Poh et al.	
	140	8522039	B2	2013-08-27	Hyndman et al.	

INFORMATION DISCLOSURE STATEMENT BY APPLICANT (Not for submission under 37 CFR 1.99)		
	Application Number	16907887
	Filing Date	2020-06-22
	First Named Inventor	RALEIGH, GREGORY
	Art Unit	2434
	Examiner Name	KAPLAN, BENJAMIN
	Attorney Docket Number	RALEP025C1C1C1C1

	141	8522249	B2	2013-08-27	Beaule, Stephane	
	142	8522337	B2	2013-08-27	Adusumilli et al.	
	143	8523547	B2	2013-09-03	Pekrul, Merton W.	
	144	8526329	B2	2013-09-03	Mahany, Ronald L. et al.	
	145	8526350	B2	2013-09-03	Xue, Qi et al.	
	146	8527013	B2	2013-09-03	Guba et al.	
	147	8527410	B2	2013-09-03	Markki et al.	
	148	8527662	B2	2013-09-03	Biswas et al.	
	149	8528068	B1	2013-09-03	Weglein et al.	
	150	8531954	B2	2013-09-10	McNaughton et al.	
	151	8531995	B2	2013-09-10	Khan et al.	

INFORMATION DISCLOSURE STATEMENT BY APPLICANT (Not for submission under 37 CFR 1.99)		
	Application Number	16907887
	Filing Date	2020-06-22
	First Named Inventor	RALEIGH, GREGORY
	Art Unit	2434
	Examiner Name	KAPLAN, BENJAMIN
	Attorney Docket Number	RALEP025C1C1C1C1

	152	8532610	B2	2013-09-10	Manning Cassett et al.	
	153	8533775	B2	2013-09-10	Alcorn et al.	
	154	8535160	B2	2013-09-17	Lutnick et al.	
	155	8538394	B2	2013-09-17	Zimmerman et al.	
	156	8538421	B2	2013-09-17	Brisebois et al.	
	157	8538458	B2	2013-09-17	Haney, Richard D.	
	158	8539544	B2	2013-09-17	Garimella et al.	
	159	8543265	B2	2013-09-24	Ekhaguere et al.	
	160	8543814	B2	2013-09-24	Laitinen et al.	
	161	8544105	B2	2013-09-24	Mclean et al.	
	162	8548427	B2	2013-10-01	Chow et al.	

INFORMATION DISCLOSURE STATEMENT BY APPLICANT (Not for submission under 37 CFR 1.99)		
	Application Number	16907887
	Filing Date	2020-06-22
	First Named Inventor	RALEIGH, GREGORY
	Art Unit	2434
	Examiner Name	KAPLAN, BENJAMIN
	Attorney Docket Number	RALEP025C1C1C1C1

	163	8549173	B1	2013-10-01	Wu et al.	
	164	8554876	B2	2013-10-08	Winsor, Gerald W.	
	165	8559369	B2	2013-10-15	Barkan	
	166	8561138	B2	2013-10-15	Rothman, Michael M. et al.	
	167	8565746	B2	2013-10-22	Hoffman, George E.	
	168	8566236	B2	2013-10-22	Busch, James David	
	169	8571474	B2	2013-10-29	Chavez et al.	
	170	8571501	B2	2013-10-29	Miller et al.	
	171	8571598	B2	2013-10-29	Valavi, John J.	
	172	8571993	B2	2013-10-29	Kocher et al.	
	173	8572117	B2	2013-10-29	Rappaport, Theodore S.	

INFORMATION DISCLOSURE STATEMENT BY APPLICANT (Not for submission under 37 CFR 1.99)		
	Application Number	16907887
	Filing Date	2020-06-22
	First Named Inventor	RALEIGH, GREGORY
	Art Unit	2434
	Examiner Name	KAPLAN, BENJAMIN
	Attorney Docket Number	RALEP025C1C1C1C1

	174	8572256	B2	2013-10-29	Babbar, Uppinder Singh	
	175	8583499		2013-11-12	De Judicibus, Dario et al.	
	176	8588240	B2	2013-11-19	Ramankutty et al.	
	177	8589955	B2	2013-11-19	Roundtree et al.	
	178	8594665	B2	2013-11-26	Anschutz, Thomas	
	179	8595186	B1	2013-11-26	Mandyam et al.	
	180	8600895	B2	2013-12-03	Felsher, David Paul	
	181	8601125	B2	2013-12-03	Huang et al.	
	182	8605691	B2	2013-12-10	Soomro et al.	
	183	8615507	B2	2013-12-24	VARADARAJULU et al.	
	184	8619735	B2	2013-12-31	Montemurro et al.	

INFORMATION DISCLOSURE STATEMENT BY APPLICANT (Not for submission under 37 CFR 1.99)		
	Application Number	16907887
	Filing Date	2020-06-22
	First Named Inventor	RALEIGH, GREGORY
	Art Unit	2434
	Examiner Name	KAPLAN, BENJAMIN
	Attorney Docket Number	RALEP025C1C1C1C1

	185	8620257	B2	2013-12-31	Qiu et al.	
	186	8630925	B2	2014-01-14	Bystrom et al.	
	187	8631428	B2	2014-01-14	Scott et al.	
	188	8634425	B2	2014-01-21	Gorti et al.	
	189	8635164	B2	2014-01-21	Rosenhaft et al.	
	190	8639215	B2	2014-01-28	McGregor et al.	
	191	8644702	B1	2014-02-04	Kalajan, Kevin E.	
	192	8644813	B1	2014-02-04	Gailloux et al.	
	193	8645518	B	2014-02-04	David, Scott L.	
	194	8655357	B1	2014-02-18	Gazzard et al.	
	195	8656472	B2	2014-02-18	McMurtry et al.	

INFORMATION DISCLOSURE STATEMENT BY APPLICANT (Not for submission under 37 CFR 1.99)		
	Application Number	16907887
	Filing Date	2020-06-22
	First Named Inventor	RALEIGH, GREGORY
	Art Unit	2434
	Examiner Name	KAPLAN, BENJAMIN
	Attorney Docket Number	RALEP025C1C1C1C1

	196	8660853	B2	2014-02-25	Robb et al.	
	197	8666395	B2	2014-03-04	Silver, Andrew	
	198	8667542	B1	2014-03-04	Bertz et al.	
	199	8670334	B	2014-03-11	Keohane et al.	
	200	8675852	B2	2014-03-18	Maes, Stephane H.	
	201	8676682	B2	2014-03-18	Kalliola, Janne	
	202	8676925	B	2014-03-18	Liu et al.	
	203	8693323		2014-04-08	McDysan, David E.	
	204	8694772	B2	2014-04-08	Kao et al.	
	205	8700729	B2	2014-04-15	Dua, Robin	
	206	8701015	B2	2014-04-15	Bonnat, Pierre	

INFORMATION DISCLOSURE STATEMENT BY APPLICANT (Not for submission under 37 CFR 1.99)		
	Application Number	16907887
	Filing Date	2020-06-22
	First Named Inventor	RALEIGH, GREGORY
	Art Unit	2434
	Examiner Name	KAPLAN, BENJAMIN
	Attorney Docket Number	RALEP025C1C1C1C1

	207	8705361	B2	2014-04-22	Venkataraman et al.	
	208	8706863		2014-04-22	Fadell, Anthony	
	209	8713535	B2	2014-04-29	Malhotra et al.	
	210	8713641	B1	2014-04-29	Pagan et al.	
	211	8719397	B2	2014-05-06	Levi et al.	
	212	8719423	B2	2014-05-06	Wyld	
	213	8724486	B2	2014-05-13	Seto et al.	
	214	8725899	B	2014-05-13	Short et al.	
	215	8730842	B2	2014-05-20	Collins et al.	
	216	8731519	B2	2014-05-20	Flynn et al.	
	217	8732808	B2	2014-05-20	Sewall et al.	

INFORMATION DISCLOSURE STATEMENT BY APPLICANT (Not for submission under 37 CFR 1.99)		
	Application Number	16907887
	Filing Date	2020-06-22
	First Named Inventor	RALEIGH, GREGORY
	Art Unit	2434
	Examiner Name	KAPLAN, BENJAMIN
	Attorney Docket Number	RALEP025C1C1C1C1

	218	8739035	B2	2014-05-27	Trethewey, Jim	
	219	8744339	B2	2014-06-03	Halfmann et al.	
	220	8761711	B2	2014-06-24	Grignani et al.	
	221	8780857	B2	2014-07-15	Balasubramanian et al.	
	222	8787249	B2	2014-07-22	Giaretta et al.	
	223	8792857	B2	2014-07-29	Cai et al.	
	224	8793304	B2	2014-07-29	Lu et al.	
	225	8798610	B2	2014-08-05	Prakash et al.	
	226	8799440	B2	2014-08-05	Zhou et al.	
	227	8804695	B2	2014-08-12	Branam	
	228	8811338	B2	2014-08-19	Jin et al.	

INFORMATION DISCLOSURE STATEMENT BY APPLICANT (Not for submission under 37 CFR 1.99)		
	Application Number	16907887
	Filing Date	2020-06-22
	First Named Inventor	RALEIGH, GREGORY
	Art Unit	2434
	Examiner Name	KAPLAN, BENJAMIN
	Attorney Docket Number	RALEP025C1C1C1C1

	229	8811991	B2	2014-08-19	Jain et al.	
	230	8818394	B2	2014-08-26	Bienas et al.	
	231	8819253	B2	2014-08-26	Simeloff et al.	
	232	8825109	B2	2014-09-02	Montemurro et al.	
	233	8826411	B2	2014-09-02	Moen et al.	
	234	8831561	B2	2014-09-09	Sutaria et al.	
	235	8838752	B2	2014-09-16	Lor et al.	
	236	8843849	B2	2014-09-23	Neil et al.	
	237	8845415	B2	2014-09-30	Lutnick et al.	
	238	8849297	B2	2014-09-30	Balasubramanian	
	239	8855620	B2	2014-10-07	Sievers et al.	

INFORMATION DISCLOSURE STATEMENT BY APPLICANT (Not for submission under 37 CFR 1.99)		
	Application Number	16907887
	Filing Date	2020-06-22
	First Named Inventor	RALEIGH, GREGORY
	Art Unit	2434
	Examiner Name	KAPLAN, BENJAMIN
	Attorney Docket Number	RALEP025C1C1C1C1

	240	8862751	B2	2014-10-14	Faccin et al.	
	241	8863111	B2	2014-10-14	Selitser et al.	
	242	8875042	B2	2014-10-28	LeJeune et al.	
	243	8880047	B2	2014-11-04	Konicek et al.	
	244	8891483	B2	2014-11-18	Connelly et al.	
	245	8898748	B2	2014-11-25	Burks et al.	
	246	8908516	B2	2014-12-09	Tzamaloukas et al.	
	247	8929374	B2	2015-01-06	Tönsing et al.	
	248	8930238	B2	2015-01-06	Coffman et al.	
	249	8930551	B2	2015-01-06	Pandya et al.	
	250	8943551	B2	2015-01-27	Ganapathy et al.	

INFORMATION DISCLOSURE STATEMENT BY APPLICANT (Not for submission under 37 CFR 1.99)		
	Application Number	16907887
	Filing Date	2020-06-22
	First Named Inventor	RALEIGH, GREGORY
	Art Unit	2434
	Examiner Name	KAPLAN, BENJAMIN
	Attorney Docket Number	RALEP025C1C1C1C1

	251	8948726	B2	2015-02-03	Smith et al.	
	252	8949382	B2	2015-02-03	Cornett et al.	
	253	8949597	B1	2015-02-03	Reeves et al.	
	254	8955038	B2	2015-02-10	Nicodemus et al.	
	255	8966018	B2	2015-02-24	Bugwadia et al.	
	256	8971912	B2	2015-03-03	Chou et al.	
	257	8977284	B2	2015-03-10	Reed, Mark J.	
	258	8995952	B1	2015-03-31	Baker et al.	
	259	9002342	B2	2015-04-07	Tenhunen et al.	
	260	9014973	B2	2015-04-21	Ruckart, John	
	261	9015331	B2	2015-04-21	Lai et al.	

INFORMATION DISCLOSURE STATEMENT BY APPLICANT (Not for submission under 37 CFR 1.99)		
	Application Number	16907887
	Filing Date	2020-06-22
	First Named Inventor	RALEIGH, GREGORY
	Art Unit	2434
	Examiner Name	KAPLAN, BENJAMIN
	Attorney Docket Number	RALEP025C1C1C1C1

	262	9026100	B2	2015-05-05	Castro et al.	
	263	9030934	B2	2015-05-12	Shah et al.	
	264	9049010		2015-06-02	Jueneman et al.	
	265	9064275	B1	2015-06-23	Lu et al.	
	266	9105031	B2	2015-08-11	Shen et al.	
	267	9111088	B2	2015-08-18	Ghai et al.	
	268	9137286	B1	2015-09-15	Yuan	
	269	9172553	B2	2015-10-27	Dawes et al.	
	270	9177455	B2	2015-11-03	Remer, David M.	
	271	9282460	B2	2016-03-08	Souissi, Slim Salah	
	272	9286469	B2	2016-03-15	Kraemer et al.	

INFORMATION DISCLOSURE STATEMENT BY APPLICANT (Not for submission under 37 CFR 1.99)		
	Application Number	16907887
	Filing Date	2020-06-22
	First Named Inventor	RALEIGH, GREGORY
	Art Unit	2434
	Examiner Name	KAPLAN, BENJAMIN
	Attorney Docket Number	RALEP025C1C1C1C1

	273	9286604	B2	2016-03-15	Aabye et al.	
	274	9313708	B2	2016-04-12	Nam et al.	
	275	9325737	B2	2016-04-26	Gutowski et al.	
	276	9326173	B2	2016-04-26	Luft, Achim	
	277	9344557	B2	2016-05-17	Gruchala et al.	
	278	9363285	B2	2016-06-07	Kitamura	
	279	9367680	B2	2016-06-14	Mahaffey et al.	
	280	9413546	B2	2016-08-09	Meier et al.	
	281	9418381	B2	2016-08-16	Ahuja et al.	
	282	9459767	B2	2016-10-04	Cockcroft et al.	
	283	9501803	B2	2016-11-22	Bilac et al.	

INFORMATION DISCLOSURE STATEMENT BY APPLICANT (Not for submission under 37 CFR 1.99)		
	Application Number	16907887
	Filing Date	2020-06-22
	First Named Inventor	RALEIGH, GREGORY
	Art Unit	2434
	Examiner Name	KAPLAN, BENJAMIN
	Attorney Docket Number	RALEP025C1C1C1C1

	284	9544397	B2	2017-01-10	Raleigh et al.	
	285	9589117	B2	2017-03-07	Ali et al.	
	286	9609459	B2	2017-03-28	Raleigh, Gregory G.	
	287	9712476	B2	2017-07-18	Boynton et al.	
	288	9942796	B2	2018-04-10	Raleigh	
	289	9986413	B2	2018-05-29	Raleigh	
	290	RE44412		2013-08-06	Naqvi et al.	

If you wish to add additional U.S. Patent citation information please click the Add button. Add

U.S.PATENT APPLICATION PUBLICATIONS Remove

Examiner Initial*	Cite No	Publication Number	Kind Code[1]	Publication Date	Name of Patentee or Applicant of cited Document	Pages,Columns,Lines where Relevant Passages or Relevant Figures Appear
	1					

If you wish to add additional U.S. Published Application citation information please click the Add button. Add

FOREIGN PATENT DOCUMENTS Remove

INFORMATION DISCLOSURE STATEMENT BY APPLICANT (Not for submission under 37 CFR 1.99)		
	Application Number	16907887
	Filing Date	2020-06-22
	First Named Inventor	RALEIGH, GREGORY
	Art Unit	2434
	Examiner Name	KAPLAN, BENJAMIN
	Attorney Docket Number	RALEP025C1C1C1C1

Examiner Initial*	Cite No	Foreign Document Number[3]	Country Code[2]	Kind Code[4]	Publication Date	Name of Patentee or Applicant of cited Document	Pages,Columns,Lines where Relevant Passages or Relevant Figures Appear	T[5]
	1							

If you wish to add additional Foreign Patent Document citation information please click the Add button Add

NON-PATENT LITERATURE DOCUMENTS Remove

Examiner Initials*	Cite No	Include name of the author (in CAPITAL LETTERS), title of the article (when appropriate), title of the item (book, magazine, journal, serial, symposium, catalog, etc), date, pages(s), volume-issue number(s), publisher, city and/or country where published.	T[5]
	1		

If you wish to add additional non-patent literature document citation information please click the Add button Add

EXAMINER SIGNATURE

Examiner Signature	/BENJAMIN A KAPLAN/	Date Considered	06/19/2021

*EXAMINER: Initial if reference considered, whether or not citation is in conformance with MPEP 609. Draw line through a citation if not in conformance and not considered. Include copy of this form with next communication to applicant.

[1] See Kind Codes of USPTO Patent Documents at www.USPTO.GOV or MPEP 901.04. [2] Enter office that issued the document, by the two-letter code (WIPO Standard ST.3). [3] For Japanese patent documents, the indication of the year of the reign of the Emperor must precede the serial number of the patent document. [4] Kind of document by the appropriate symbols as indicated on the document under WIPO Standard ST.16 if possible. [5] Applicant is to place a check mark here if English language translation is attached.

EFS Web 2.1.18

ALL REFERENCES CONSIDERED EXCEPT WHERE LINED THROUGH. /B.A.K/

INFORMATION DISCLOSURE STATEMENT BY APPLICANT (Not for submission under 37 CFR 1.99)		
	Application Number	16907887
	Filing Date	2020-06-22
	First Named Inventor	RALEIGH, GREGORY
	Art Unit	2434
	Examiner Name	KAPLAN, BENJAMIN
	Attorney Docket Number	RALEP025C1C1C1C1

CERTIFICATION STATEMENT

Please see 37 CFR 1.97 and 1.98 to make the appropriate selection(s):

That each item of information contained in the information disclosure statement was first cited in any communication from a foreign patent office in a counterpart foreign application not more than three months prior to the filing of the information disclosure statement. See 37 CFR 1.97(e)(1).

OR

☐ That no item of information contained in the information disclosure statement was cited in a communication from a foreign patent office in a counterpart foreign application, and, to the knowledge of the person signing the certification after making reasonable inquiry, no item of information contained in the information disclosure statement was known to any individual designated in 37 CFR 1.56(c) more than three months prior to the filing of the information disclosure statement. See 37 CFR 1.97(e)(2).

See attached certification statement.

The fee set forth in 37 CFR 1.17 (p) has been submitted herewith.

X A certification statement is not submitted herewith.

SIGNATURE

A signature of the applicant or representative is required in accordance with CFR 1.33, 10.18. Please see CFR 1.4(d) for the form of the signature.

Signature	/James E. Harris/	Date (YYYY-MM-DD)	2021-02-03
Name/Print	James E. Harris	Registration Number	40013

This collection of information is required by 37 CFR 1.97 and 1.98. The information is required to obtain or retain a benefit by the public which is to file (and by the USPTO to process) an application. Confidentiality is governed by 35 U.S.C. 122 and 37 CFR 1.14. This collection is estimated to take 1 hour to complete, including gathering, preparing and submitting the completed application form to the USPTO. Time will vary depending upon the individual case. Any comments on the amount of time you require to complete this form and/or suggestions for reducing this burden, should be sent to the Chief Information Officer, U.S. Patent and Trademark Office, U.S. Department of Commerce, P.O. Box 1450, Alexandria, VA 22313-1450. DO NOT SEND FEES OR COMPLETED FORMS TO THIS ADDRESS. **SEND TO: Commissioner for Patents, P.O. Box 1450, Alexandria, VA 22313-1450.**

Privacy Act Statement

The Privacy Act of 1974 (P.L. 93-579) requires that you be given certain information in connection with your submission of the attached form related to a patent application or patent. Accordingly, pursuant to the requirements of the Act, please be advised that: (1) the general authority for the collection of this information is 35 U.S.C. 2(b)(2); (2) furnishing of the information solicited is voluntary; and (3) the principal purpose for which the information is used by the U.S. Patent and Trademark Office is to process and/or examine your submission related to a patent application or patent. If you do not furnish the requested information, the U.S. Patent and Trademark Office may not be able to process and/or examine your submission, which may result in termination of proceedings or abandonment of the application or expiration of the patent.

The information provided by you in this form will be subject to the following routine uses:

1. The information on this form will be treated confidentially to the extent allowed under the Freedom of Information Act (5 U.S.C. 552) and the Privacy Act (5 U.S.C. 552a). Records from this system of records may be disclosed to the Department of Justice to determine whether the Freedom of Information Act requires disclosure of these record s.

2. A record from this system of records may be disclosed, as a routine use, in the course of presenting evidence to a court, magistrate, or administrative tribunal, including disclosures to opposing counsel in the course of settlement negotiations.

3. A record in this system of records may be disclosed, as a routine use, to a Member of Congress submitting a request involving an individual, to whom the record pertains, when the individual has requested assistance from the Member with respect to the subject matter of the record.

4. A record in this system of records may be disclosed, as a routine use, to a contractor of the Agency having need for the information in order to perform a contract. Recipients of information shall be required to comply with the requirements of the Privacy Act of 1974, as amended, pursuant to 5 U.S.C. 552a(m).

5. A record related to an International Application filed under the Patent Cooperation Treaty in this system of records may be disclosed, as a routine use, to the International Bureau of the World Intellectual Property Organization, pursuant to the Patent Cooperation Treaty.

6. A record in this system of records may be disclosed, as a routine use, to another federal agency for purposes of National Security review (35 U.S.C. 181) and for review pursuant to the Atomic Energy Act (42 U.S.C. 218(c)).

7. A record from this system of records may be disclosed, as a routine use, to the Administrator, General Services, or his/her designee, during an inspection of records conducted by GSA as part of that agency's responsibility to recommend improvements in records management practices and programs, under authority of 44 U.S.C. 2904 and 2906. Such disclosure shall be made in accordance with the GSA regulations governing inspection of records for this purpose, and any other relevant (i.e., GSA or Commerce) directive. Such disclosure shall not be used to make determinations about individuals.

8. A record from this system of records may be disclosed, as a routine use, to the public after either publication of the application pursuant to 35 U.S.C. 122(b) or issuance of a patent pursuant to 35 U.S.C. 151. Further, a record may be disclosed, subject to the limitations of 37 CFR 1.14, as a routine use, to the public if the record was filed in an application which became abandoned or in which the proceedings were terminated and which application is referenced by either a published application, an application open to public inspections or an issued patent.

9. A record from this system of records may be disclosed, as a routine use, to a Federal, State, or local law enforcement agency, if the USPTO becomes aware of a violation or potential violation of law or regulation.

ALL REFERENCES CONSIDERED EXCEPT WHERE LINED THROUGH. /B.A.K/

PLUS Search Results for S/N 16907887, Searched Thu Mar 18 16:18:30 EDT 2021

The Patent Linguistics Utility System (PLUS) is a USPTO automated search system for U.S. Patents from 1971 to the present PLUS is a query-by-example search system which produces a list of patents that are most closely related linguistically to the application searched. This search was prepared by the staff of the Scientific and Technical Information Center, SIRA.

5999524 77
3882048 75
3815057 75
4245460 75
4312106 75
4349703 75
4370158 75
4482758 75
4491637 75
4543427 75
4886281 75
4907176 75
4922491 75
5305817 75
5435528 75
5529729 75
5577101 75
5719917 75
5765998 75
5790639 75
5923729 75
5999601 75
6081834 75
6101533 75
6111907 75
6138028 75
6141355 75
6456962 75
6522647 75
6526058 75
6560225 75
6910047 75
7313415 75
7483504 75
7634250 75
7688856 75
7688857 75
7729496 75
7764617 75
7797275 75
7822148 75
7848731 75
7894442 75
7929408 75
7929905 75
7929940 75
7933572 75
8005004 75
8050291 75
8054741 75
7894442 75
7929408 75
7929905 75
7929940 75
7933572 75
8005004 75
8050291 75
8054741 75
8090379 75
8121646 75
8127197 75
8160021 75
8175649 75
8195224 75
8249008 75
8320957 75
8346091 75
8346225 75
8385274 75
8402111 75
8422885 75
8428033 75
8467290 75
8521172 75
8543126 75
8549178 75
8588614 75
8619723 75
8693342 75
8724607 75
8831593 75
8837940 75
8934427 75
8953602 75
9020555 75
9026036 75
9032424 75
9047292 75
RE45570 75
9078218 75
9134726 75
9166690 75
9179356 75
9183576 75
9191956 75
9197705 75
9219520 75
9235356 75
9239690 75
9246557 75
9306669 75
9343797 75
9369171 75
9374187 75
9414137 75
9438513 75
9491050 75
9516611 75
9549301 75
9572048 75
9641453 75
9681313 75
9693321 75
9722686 75
9735845 75
9780841 75
9800340 75
9813972 75
9826410 75
9897638 75
9912387 75
9948349 75
10001608 75
10009094 75
10050728 75
10051510 75
10056948 75
10070305 75
10075216 75
10111107 75
10142864 75
10148466 75
10171136 75
10180807 75
10187127 75
10194299 75
10200124 75
10236924 75
10237773 75
10243807 75
10261941 75
10291019 75
10291322 75
10298774 75
10299151 75
10306691 75
10313030 75

10314046 75
10317447 75
10327217 75
10375554 75
10382100 75
10382847 75
10404866 75
10419078 75
10419134 75
10424139 75
10425847 75
10455497 75
10462016 75
10470245 75
10499253 75
10517004 75
10530408 75
10530480 75
10560211 75
10582375 75
10602393 75
10608758 75
10652053 75
10667193 75
10693527 75
10707924 75
10715297 75
10716011 75
10721637 75
10727946 75
10728635 75
10728776 75
10749700 75
10754109 75
10785082 75
10805811 75
10819444 75
10820215 75
10827444 75
10833780 75
10848330 75
10885732 75
10887885 75
10911604 75
20030114165 75
20030191781 75
20030202468 75
20040181674 75
20060029099 75
20060094470 75
20060101384 75
20060123116 75
20070143340 75
20070201700 75
20070291793 75
20080151899 75
20080155659 75
20080174502 75
20080175175 75
20080192702 75
20080192855 75
20080205336 75
20090154621 75
20090175184 75
20090175227 75
20090175246 75
20090232158 75
20090252139 75
20090258652 75
20100054227 75
20100061375 75
20100067906 75
20100074104 75
20100093391 75
20100099451 75
20100195503 75
20100198939 75
20100266287 75
20100278530 75
20100296816 75
20100306415 75
20110130163 75
20110244914 75
20110311226 75
20110314145 75
20120054193 75
20120054325 75
20120101952 75
20120129566 75
20120178468 75
20120178483 75
20120195271 75
20120207145 75
20120214538 75
20120236790 75
20120265324 75
20120281622 75
20120293390 75
20120324091 75
20130034054 75
20130058281 75
20130071112 75
20130107763 75
20130121703 75
20130124482 75
20130151353 75
20130225216 75
20130236180 75
20130239130 75
20130308537 75
20140036934 75
20140064730 75
20140087742 75
20140219140 75
20140309812 75
20140313984 75
20140325149 75
20140342674 75
20140351903 75
20150039871 75
20150043385 75
20150055954 75
20150094014 75
20150127617 75
20150145528 75
20150215814 75
20150230184 75
20150319711 75
20150334476 75
20160036536 75
20160057648 75
20160087745 75
20160134561 75
20160142196 75
20160211891 75
20160212630 75
20160241339 75
20160269917 75
20160302116 75
20160309340 75
20160323734 75
20160329703 75
20160337010 75
20160337050 75
20160337883 75
20160344513 75
20160345257 75
20160352393 75
20170019144 75
20170019808 75
20170048732 75

PLUS Search Results for S/N 16907887, Searched Thu Mar 18 15:40:27 EDT 2021

The Patent Linguistics Utility System (PLUS) is a USPTO automated search system for U.S. Patents from 1971 to the present PLUS is a query-by-example search system which produces a list of patents that are most closely related linguistically to the application searched. This search was prepared by the staff of the Scientific and Technical Information Center, SIRA.

8391834 55
10028144 55
20100199325 55
20160212174 55
20040055005 55
20160247107 55
20160267419 55
6343319 47
6996460 47
8059306 47
8059306 47
8994591 47
10529187 47
20020136885 47
20030035653 47
20050178833 47
20070050871 47
20110078015 47
20110078015 47
20160267401 47
20180165915 47
20190370912 47
6487464 46
10694385 46
20120084438 46
20200322802 46
20100195503 44
6522647 43
6526058 43
20120265324 43
9161227 38
20050240925 38
20080189714 38
6101617 37
9619417 37
10120696 37
20120324067 37
20160274920 37
5704055 37
6347396 37
7231269 37
7543299 37
7565304 37
7669242 37
7765552 37
7793307 37
7827550 37
7831802 37
7996714 37
7996714 37
8090974 37
8176487 37
8200741 37
8201167 37
8201180 37
8271754 37
8352775 37
8682876 37
8725995 37
8745330 37
8863138 37
8984327 37
8996864 37
9218221 37
9317453 37
9338656 37
9389895 37
9438485 37
9465643 37
9483289 37
9483639 37
9519795 37
9733848 37
9747116 37
9798973 37
9870282 37
9900397 37
9959127 37
10095738 37
10185681 37
10187454 37
10284486 37
10289467 37
10296380 37
10348565 37
10462068 37
10474372 37
10474998 37
10476938 37
10574689 37
10659316 37
10664458 37
10798140 37
10873627 37
20030236972 37
20040186601 37
20040199896 37
20070043896 37
20070060200 37
20070288941 37
20080147835 37
20080250222 37
20090024830 37
20090037907 37
20090063396 37
20090307445 37
20090307685 37
20100031325 37
20100122249 37
20100299749 37
20110082990 37
20110082990 37
20110231638 37
20120117353 37
20120131300 37
20120159090 37
20120167081 37
20130041971 37
20130337777 37
20140058995 37
20140075567 37
20140176582 37
20140310705 37
20140358972 37
20140380330 37
20150039939 37
20150261560 37
20150261952 37
20150301759 37
20150350200 37
20160055012 37
20160077847 37
20160246742 37
20160335151 37
20160350132 37
20170142177 37
20170220612 37
20180121474 37
20190068455 37
20190102156 37
20190222633 37
20190287026 37
20190294490 37
20190370013 37
20200026695 37
20200092222 37
20200133937 37

20200228626 37
20210034431 37
7218275 37
7965233 37
7965233 37
20060064319 37
20090167600 37
20100188975 37
20100191847 37
20150026758 37
5301270 37
7370324 37
8108721 37
8195124 37
8195759 37
8281315 37
9261370 37
9843567 37
20050081212 37
20070104204 37
20070197197 37
20080229157 37
20090040982 37
20100250072 37
20110126049 37
20140081572 37
20160123740 37
20180218293 37
20190028928 37
20100152893 36
3842405 36
5566352 36
5650940 36
5896507 36
7012993 36
7058022 36
7209945 36
8009644 36
8060557 36
8009644 36
8060557 36
8089870 36
8111711 36
8150907 36
8831425 36
8948822 36
9258237 36
9258294 36
9490925 36
9686198 36
9807607 36
10243796 36
10531289 36
20020110111 36
20030031235 36
20030190030 36
20040054718 36
20060026441 36
20060067486 36
20070130456 36
20070180142 36
20070192477 36
20090270138 36
20140164764 36
20150188907 36
20150201331 36
20150230126 36
20160248641 36
20180191560 36
20180352489 36
20180367989 36
20200404683 36
20210007006 36
20210051664 36
8964980 36
10360135 36
20070277126 36
20100080390 36
20170286265 36
7822148 35
7966613 35
8045501 35
8055262 35
7966613 35
8045501 35
8055262 35
8126510 35
8274929 35
8279800 35
8489893 35
8495292 35
8644844 35
8831592 35
9019929 35
9032424 35
9047292 35
9078218 35
9197705 35
9235356 35
9239690 35
9300372 35
9402233 35
9432095 35
9461719 35
9572048 35
9609070 35
9621418 35
9693321 35
9749779 35
9800340 35
9897638 35
9948349 35
9960487 35
10142864 35
10186770 35
10200124 35
10317447 35
10327217 35
10348405 35
10707924 35
10742270 35
10798002 35
10819644 35
10868808 35
10952157 35
20070143787 35
20090197587 35
20100002626 35
20100014494 35
20100291949 35
20110022801 35
20110191595 35
20120054193 35
20120054325 35
20120166724 35
20120240110 35
20130124482 35
20130150065 35
20130239130 35
20140011496 35
20140064399 35
20140072071 35
20140173330 35
20140211875 35
20140212144 35
20140309812 35
20150043385 35
20150092693 35
20150145528 35
20150319711 35
20150350756 35
20160087745 35

PTO/SB/08a (02-18)
Approved for use through 11/30/2020. OMB 0651-0031
U.S. Patent and Trademark Office; U.S. DEPARTMENT OF COMMERCE
Under the Paperwork Reduction Act of 1995, no persons are required to respond to a collection of information unless it contains a valid OMB control number.

INFORMATION DISCLOSURE STATEMENT BY APPLICANT

(Not for submission under 37 CFR 1.99)

Application Number	16907887
Filing Date	2020-06-22
First Named Inventor	RALEIGH, GREGORY
Art Unit	2434
Examiner Name	KAPLAN, BENJAMIN
Attorney Docket Number	RALEP025C1C1C1C1

U.S.PATENTS Remove

Examiner Initial*	Cite No	Patent Number	Kind Code[1]	Issue Date	Name of Patentee or Applicant of cited Document	Pages,Columns,Lines where Relevant Passages or Relevant Figures Appear
	1	10285025	B1	2019-05-07	Baker et al.	
	2	10326800	B2	2019-06-18	Raleigh et al.	
	3	10492102	B2	2019-11-26	Raleigh et al.	
	4	10582375	B2	2020-03-03	Raleigh	

If you wish to add additional U.S. Patent citation information please click the Add button. Add

U.S.PATENT APPLICATION PUBLICATIONS Remove

Examiner Initial*	Cite No	Publication Number	Kind Code[1]	Publication Date	Name of Patentee or Applicant of cited Document	Pages,Columns,Lines where Relevant Passages or Relevant Figures Appear
	1	20010048738	A	2001-12-06	Baniak, Paul G. et al.	
	2	20010053694		2001-12-20	IGARASHI, Yoichiro et al.	

INFORMATION DISCLOSURE STATEMENT BY APPLICANT (Not for submission under 37 CFR 1.99)		
	Application Number	16907887
	Filing Date	2020-06-22
	First Named Inventor	RALEIGH, GREGORY
	Art Unit	2434
	Examiner Name	KAPLAN, BENJAMIN
	Attorney Docket Number	RALEP025C1C1C1C1

	3	20020013844	A1	2002-01-31	Garrett et al.	
	4	20020022472		2002-02-21	WATLER et al.	
	5	20020022483	A1	2002-02-21	Thompson et al.	
	6	20020049074	A	2002-04-25	Eisinger, Bernd et al.	
	7	20020099848	A1	2002-07-25	Lee, Hoon	
	8	20020116338		2002-08-22	GONTHIER, Jean-Charles et al.	
	9	20020120370	A1	2002-08-29	Parupudi et al.	
	10	20020120540		2002-08-29	KENDE et al.	
	11	20020131404		2002-09-19	MEHTA et al.	
	12	20020138599	A1	2002-09-26	Dilman et al.	
	13	20020138601		2002-09-26	PIPONIUS et al.	

INFORMATION DISCLOSURE STATEMENT BY APPLICANT (Not for submission under 37 CFR 1.99)	Application Number	16907887
	Filing Date	2020-06-22
	First Named Inventor	RALEIGH, GREGORY
	Art Unit	2434
	Examiner Name	KAPLAN, BENJAMIN
	Attorney Docket Number	RALEP025C1C1C1C1

	14	20020154751	A1	2002-10-24	Thompson et al.	
	15	20020161601	A	2002-10-31	Nauer, Bernhard et al.	
	16	20020164983		2002-11-07	Raviv, Li-On et al.	
	17	20020176377		2002-11-28	HAMILTON, Thomas E.	
	18	20020188732	A1	2002-12-12	Buckman et al.	
	19	20020191573	A1	2002-12-19	Whitehill et al.	
	20	20020199001		2002-12-26	WENOCUR et al.	
	21	20030004937		2003-01-02	SALMENKAITA et al.	
	22	20030005112		2003-01-02	KRAUTKREMER, Todd Joseph	
	23	20030013434		2003-01-16	ROSENBERG et al.	
	24	20030018524		2003-01-23	FISHMAN et al.	

INFORMATION DISCLOSURE STATEMENT BY APPLICANT (Not for submission under 37 CFR 1.99)	Application Number	16907887
	Filing Date	2020-06-22
	First Named Inventor	RALEIGH, GREGORY
	Art Unit	2434
	Examiner Name	KAPLAN, BENJAMIN
	Attorney Docket Number	RALEP025C1C1C1C1

	25	20030028623	A1	2003-02-06	Hennessey et al.	
	26	20030046396		2003-03-06	RICHTER et al.	
	27	20030050070		2003-03-13	MASHINSKY et al.	
	28	20030050837		2003-03-13	KIM, Do Sik	
	29	20030084321	A1	2003-05-01	Tarquini et al.	
	30	20030088671	A1	2003-05-08	Klinker et al.	
	31	20030133408		2003-07-17	CHENG et al.	
	32	20030134650	A1	2003-07-17	Sundar et al.	
	33	20030159030	A1	2003-08-21	Evans, Junius A.	
	34	20030161265		2003-08-28	CAO et al.	
	35	20030171112		2003-09-11	Lupper, Alfred et al.	

INFORMATION DISCLOSURE STATEMENT BY APPLICANT (Not for submission under 37 CFR 1.99)		
	Application Number	16907887
	Filing Date	2020-06-22
	First Named Inventor	RALEIGH, GREGORY
	Art Unit	2434
	Examiner Name	KAPLAN, BENJAMIN
	Attorney Docket Number	RALEP025C1C1C1C1

	36	20030182420		2003-09-25	JONES et al.	
	37	20030182435		2003-09-25	REDLICH et al.	
	38	20030184793	A1	2003-10-02	Pineau, Richard A.	
	39	20030188006	A	2003-10-02	Bard, Steven R.	
	40	20030188117	A	2003-10-02	Yoshino et al.	
	41	20030220984		2003-11-27	JONES et al.	
	42	20030224781		2003-12-04	MILFORD et al.	
	43	20030229900		2003-12-11	REISMAN, Richard	
	44	20030233332	A	2003-12-18	Keeler, James D. et al.	
	45	20030236745		2003-12-25	HARTSELL et al.	
	46	20040019539		2004-01-29	RAMAN et al.	

INFORMATION DISCLOSURE STATEMENT BY APPLICANT (Not for submission under 37 CFR 1.99)		
	Application Number	16907887
	Filing Date	2020-06-22
	First Named Inventor	RALEIGH, GREGORY
	Art Unit	2434
	Examiner Name	KAPLAN, BENJAMIN
	Attorney Docket Number	RALEP025C1C1C1C1

	47	20040019564	A1	2004-01-29	Goldthwaite et al.	
	48	20040021697		2004-02-05	BEATON et al.	
	49	20040024756	A1	2004-02-05	Rickard, John Terrell	
	50	20040030705		2004-02-12	BOWMAN-AMUAH, Michel K.	
	51	20040039792	A1	2004-02-26	Nakanishi, Tomoaki	
	52	20040044623		2004-03-04	WAKE et al.	
	53	20040047358		2004-03-11	CHEN et al.	
	54	20040054779	A1	2004-03-18	Takeshima et al.	
	55	20040073672		2004-04-15	FASCENDA, Anthony C.	
	56	20040082346		2004-04-29	SKYTT et al.	
	57	20040098715		2004-05-20	AGHERA et al.	

INFORMATION DISCLOSURE STATEMENT BY APPLICANT (Not for submission under 37 CFR 1.99)		
	Application Number	16907887
	Filing Date	2020-06-22
	First Named Inventor	RALEIGH, GREGORY
	Art Unit	2434
	Examiner Name	KAPLAN, BENJAMIN
	Attorney Docket Number	RALEP025C1C1C1C1

	58	20040102182	A	2004-05-27	Reith, Lothar et al.	
	59	20040103193		2004-05-27	PANDYA et al.	
	60	20040107360		2004-06-03	HERRMANN et al.	
	61	20040116140	A1	2004-06-17	Babbar et al.	
	62	20040127200		2004-07-01	SHAW et al.	
	63	20040127208	A1	2004-07-01	Nair et al.	
	64	20040127256	A1	2004-07-01	Goldthwaite et al.	
	65	20040132427		2004-07-08	Lee, Wan-Yeon et al.	
	66	20040133668	A1	2004-07-08	Nicholas III, Henry T.	
	67	20040137890	A1	2004-07-15	Kalke, Catherine	
	68	20040165596	A1	2004-08-26	Garcia et al.	

INFORMATION DISCLOSURE STATEMENT BY APPLICANT (Not for submission under 37 CFR 1.99)		
	Application Number	16907887
	Filing Date	2020-06-22
	First Named Inventor	RALEIGH, GREGORY
	Art Unit	2434
	Examiner Name	KAPLAN, BENJAMIN
	Attorney Docket Number	RALEP025C1C1C1C1

	69	20040167958	A1	2004-08-26	Stewart et al.	
	70	20040168052		2004-08-26	CLISHAM et al.	
	71	20040170191	A	2004-09-02	Guo et al.	
	72	20040176104	A	1841-03-12	Arcens	
	73	20040176104	A1	2004-09-09	Arcens	
	74	20040198331		2004-10-07	COWARD et al.	
	75	20040203755		2004-10-14	BRUNET, Jeffrey et al.	
	76	20040203833	A	2004-10-14	Rathunde, Dale F. et al.	
	77	20040225561	A1	2004-11-11	Hertzberg et al.	
	78	20040225898	A	2004-11-11	Frost, D. et al.	
	79	20040236547		2004-11-25	RAPPAPORT et al.	

INFORMATION DISCLOSURE STATEMENT BY APPLICANT (Not for submission under 37 CFR 1.99)	Application Number	16907887
	Filing Date	2020-06-22
	First Named Inventor	RALEIGH, GREGORY
	Art Unit	2434
	Examiner Name	KAPLAN, BENJAMIN
	Attorney Docket Number	RALEP025C1C1C1C1

	80	20040243680	A1	2004-12-02	Mayer, Georg	
	81	20040243992	A	2004-12-02	Gustafson et al.	
	82	20040249918		2004-12-09	SUNSHINE, Roger N.	
	83	20040255145	A	2004-12-16	Chow, Jerry	
	84	20040259534	A1	2004-12-23	Chaudhari et al.	
	85	20040260766	A1	2004-12-23	Barros et al.	
	86	20040267872	A1	2004-12-30	Serdy et al.	
	87	20050007993		2005-01-13	Chambers, Mahdi et al.	
	88	20050009499		2005-01-13	KOSTER, Karl	
	89	20050021995		2005-01-27	LAL et al.	
	90	20050041617	A1	2005-02-24	Huotari et al.	

INFORMATION DISCLOSURE STATEMENT BY APPLICANT (Not for submission under 37 CFR 1.99)	Application Number	16907887
	Filing Date	2020-06-22
	First Named Inventor	RALEIGH, GREGORY
	Art Unit	2434
	Examiner Name	KAPLAN, BENJAMIN
	Attorney Docket Number	RALEP025C1C1C1C1

	91	20050048950		2005-03-03	MORPER, Hans-Jochen	
	92	20050055291		2005-03-10	BEVENTE et al.	
	93	20050055309		2005-03-10	WILLIAMS et al.	
	94	20050055595	A	2005-03-10	Frazer et al.	
	95	20050060266		2005-03-17	DEMELLO et al.	
	96	20050060525	A1	2005-03-17	Schwartz et al.	
	97	20050075115	A1	2005-04-07	Corneille et al.	
	98	20050079863	A	2005-04-14	Macaluso, Anthony G.	
	99	20050091505	A1	2005-04-28	Riley et al.	
	100	20050096024	A1	2005-05-05	Bicker et al.	
	101	20050097516		2005-05-05	DONNELLY et al.	

INFORMATION DISCLOSURE STATEMENT BY APPLICANT (Not for submission under 37 CFR 1.99)	Application Number	16907887
	Filing Date	2020-06-22
	First Named Inventor	RALEIGH, GREGORY
	Art Unit	2434
	Examiner Name	KAPLAN, BENJAMIN
	Attorney Docket Number	RALEP025C1C1C1C1

	102	20050107091		2005-05-19	VANNITHAMBY et al.	
	103	20050108075	A1	2005-05-19	Douglis et al.	
	104	20050111463	A1	2005-05-26	Leung et al.	
	105	20050128967		2005-06-16	SCOBBIE, Donald MacGregor	
	106	20050135264	A1	2005-06-23	Popoff et al.	
	107	20050163320	A1	2005-07-28	Brown et al.	
	108	20050166043		2005-07-28	ZHANG et al.	
	109	20050183143		2005-08-18	ANDERHOLM et al.	
	110	20050186948	A	2005-08-25	Gallagher et al.	
	111	20050198377		2005-09-08	FERGUSON et al.	
	112	20050216421		2005-09-29	BARRY et al.	

INFORMATION DISCLOSURE STATEMENT BY APPLICANT (Not for submission under 37 CFR 1.99)		
	Application Number	16907887
	Filing Date	2020-06-22
	First Named Inventor	RALEIGH, GREGORY
	Art Unit	2434
	Examiner Name	KAPLAN, BENJAMIN
	Attorney Docket Number	RALEP025C1C1C1C1

	113	20050228985		2005-10-13	YLIKOSKI et al.	
	114	20050238046		2005-10-27	HASSAN et al.	
	115	20050239447	A1	2005-10-27	Holzman et al.	
	116	20050245241	A1	2005-11-03	Durand et al.	
	117	20050246282		2005-11-03	NASLUND et al.	
	118	20050250508		2005-11-10	GUO et al.	
	119	20050250536	A1	2005-11-10	Deng et al.	
	120	20050254435		2005-11-17	MOAKLEY et al.	
	121	20050266825		2005-12-01	CLAYTON, Steve	
	122	20050266880		2005-12-01	GUPTA, Vivek G.	
	123	20060014519		2006-01-19	MARSH et al.	

INFORMATION DISCLOSURE STATEMENT BY APPLICANT (Not for submission under 37 CFR 1.99)		
	Application Number	16907887
	Filing Date	2020-06-22
	First Named Inventor	RALEIGH, GREGORY
	Art Unit	2434
	Examiner Name	KAPLAN, BENJAMIN
	Attorney Docket Number	RALEP025C1C1C1C1

	124	20060019632		2006-01-26	CUNNINGHAM et al.	
	125	20060020787	A1	2006-01-26	Choyi et al.	
	126	20060026679	A1	2006-02-02	Zakas	
	127	20060030306	A1	2006-02-09	Kuhn, Brian Gerald	
	128	20060034256		2006-02-16	ADDAGATLA et al.	
	129	20060035631	A1	2006-02-16	White et al.	
	130	20060040642		2006-02-23	BORIS et al.	
	131	20060045245		2006-03-02	AARON et al.	
	132	20060048223		2006-03-02	LEE et al.	
	133	20060068796	A	2006-03-30	Millen, Stephanie L. et al.	
	134	20060072451	A1	2006-04-06	Ross, Alan D.	

INFORMATION DISCLOSURE STATEMENT BY APPLICANT (Not for submission under 37 CFR 1.99)		
	Application Number	16907887
	Filing Date	2020-06-22
	First Named Inventor	RALEIGH, GREGORY
	Art Unit	2434
	Examiner Name	KAPLAN, BENJAMIN
	Attorney Docket Number	RALEP025C1C1C1C1

	135	20060072550	A1	2006-04-06	Davis et al.	
	136	20060072646		2006-04-06	FEHER, Kamilo	
	137	20060075506	A1	2006-04-06	Sanda et al.	
	138	20060085543		2006-04-20	HRASTAR et al.	
	139	20060095517	A1	2006-05-04	O'Connor et al.	
	140	20060098627	A1	2006-05-11	Karaoguz et al.	
	141	20060099970	A1	2006-05-11	Morgan et al.	
	142	20060101507	A1	2006-05-11	Camenisch, Ja L.	
	143	20060112016		2006-05-25	ISHIBASHI, Yoshihito	
	144	20060114821	A1	2006-06-01	Willey et al.	
	145	20060114832	A	2006-06-01	Hamilton et al.	

INFORMATION DISCLOSURE STATEMENT BY APPLICANT (Not for submission under 37 CFR 1.99)	Application Number	16907887
	Filing Date	2020-06-22
	First Named Inventor	RALEIGH, GREGORY
	Art Unit	2434
	Examiner Name	KAPLAN, BENJAMIN
	Attorney Docket Number	RALEP025C1C1C1C1

	146	20060126562	A1	2006-06-15	Liu, Huitao	
	147	20060135144	A	2006-06-22	Jothipragasam, Premkumar	
	148	20060136882	A1	2006-06-22	Noonan et al.	
	149	20060143066	A1	2006-06-29	Calabria	
	150	20060143098		2006-06-29	LAZARIDIS, Mihal	
	151	20060156398	A	2006-07-13	Ross et al.	
	152	20060160536	A	2006-07-20	Chou, Joey	
	153	20060165060		2006-07-27	DUA, Robin	
	154	20060168128	A	2006-07-27	Sistla et al.	
	155	20060173959	A	2006-08-03	Mckelvie et al.	
	156	20060174035	A	2006-08-03	Tufail, Mudassir	

INFORMATION DISCLOSURE STATEMENT BY APPLICANT (Not for submission under 37 CFR 1.99)	Application Number	16907887
	Filing Date	2020-06-22
	First Named Inventor	RALEIGH, GREGORY
	Art Unit	2434
	Examiner Name	KAPLAN, BENJAMIN
	Attorney Docket Number	RALEP025C1C1C1C1

	157	20060178917		2006-08-10	MERRIAM et al.	
	158	20060178918		2006-08-10	MIKURAK, Michael G.	
	159	20060182137	A1	2006-08-17	Zhou et al.	
	160	20060183462		2006-08-17	KOLEHMAINEN, Mikko	
	161	20060190314		2006-08-24	HERNANDEZ, Rick	
	162	20060190987	A1	2006-08-24	Ohta et al.	
	163	20060193280	A1	2006-08-31	Lee et al.	
	164	20060199608		2006-09-07	DUNN et al.	
	165	20060200663	A1	2006-09-07	Thornton, Andrew J.	
	166	20060206709	A1	2006-09-14	Labrou et al.	
	167	20060206904		2006-09-14	WATKINS et al.	

INFORMATION DISCLOSURE STATEMENT BY APPLICANT (Not for submission under 37 CFR 1.99)		
	Application Number	16907887
	Filing Date	2020-06-22
	First Named Inventor	RALEIGH, GREGORY
	Art Unit	2434
	Examiner Name	KAPLAN, BENJAMIN
	Attorney Docket Number	RALEP025C1C1C1C1

	168	20060218395		2006-09-28	MAES, Stephane H.	
	169	20060233108		2006-10-19	KRISHNAN, Murali R.	
	170	20060233166		2006-10-19	BOU-DIAB et al.	
	171	20060236095		2006-10-19	SMITH et al.	
	172	20060242685		2006-10-26	HEARD et al.	
	173	20060258341		2006-11-16	MILLER et al.	
	174	20060274706	A1	2006-12-07	Chen et al.	
	175	20060277590	A1	2006-12-07	Limont et al.	
	176	20060291419	A1	2006-12-28	McConnell et al.	
	177	20060291477		2006-12-28	CROAK et al.	
	178	20070005795	A1	2007-01-04	Gonzalez, Ruben	

INFORMATION DISCLOSURE STATEMENT BY APPLICANT (Not for submission under 37 CFR 1.99)		
	Application Number	16907887
	Filing Date	2020-06-22
	First Named Inventor	RALEIGH, GREGORY
	Art Unit	2434
	Examiner Name	KAPLAN, BENJAMIN
	Attorney Docket Number	RALEP025C1C1C1C1

	179	20070019670		2007-01-25	FALARDEAU, Eric	
	180	20070022289		2007-01-25	ALT et al.	
	181	20070025301	A	2007-02-01	Petersson et al.	
	182	20070033194	A	2007-02-08	Srinivas et al.	
	183	20070033197	A	2007-02-08	Scherzer, Shimon et al.	
	184	20070035390	A1	2007-02-15	Thomas et al.	
	185	20070036312		2007-02-15	CAI et al.	
	186	20070055694		2007-03-08	RUGE et al.	
	187	20070060200	A1	2007-03-15	Boris et al.	
	188	20070061243	A1	2007-03-15	Ramer et al.	
	189	20070061800	A1	2007-03-15	Cheng et al.	

INFORMATION DISCLOSURE STATEMENT BY APPLICANT (Not for submission under 37 CFR 1.99)		
	Application Number	16907887
	Filing Date	2020-06-22
	First Named Inventor	RALEIGH, GREGORY
	Art Unit	2434
	Examiner Name	KAPLAN, BENJAMIN
	Attorney Docket Number	RALEP025C1C1C1C1

	190	20070061878		2007-03-15	HAGIU, Costin et al. et al.	
	191	20070073899	A1	2007-03-29	Judge et al.	
	192	20070076616		2007-04-05	NGO et al.	
	193	20070093243		2007-04-26	KAPADEKAR et al.	
	194	20070100981		2007-05-03	ADAMCZYK et al.	
	195	20070101426		2007-05-03	LEE et al.	
	196	20070104126		2007-05-10	CALHOUN et al.	
	197	20070104169	A1	2007-05-10	Polson	
	198	20070109983	A	2007-05-17	Shankar, Rohit et al.	
	199	20070111740	A1	2007-05-17	Wandel	
	200	20070130283	A1	2007-06-07	Klein et al.	

INFORMATION DISCLOSURE STATEMENT BY APPLICANT (Not for submission under 37 CFR 1.99)		
	Application Number	16907887
	Filing Date	2020-06-22
	First Named Inventor	RALEIGH, GREGORY
	Art Unit	2434
	Examiner Name	KAPLAN, BENJAMIN
	Attorney Docket Number	RALEP025C1C1C1C1

	201	20070130315	A1	2007-06-07	Friend et al.	
	202	20070140113	A1	2007-06-21	Gemelos	
	203	20070140145	A	2007-06-21	Kumar et al.	
	204	20070140275		2007-06-21	BOWMAN et al.	
	205	20070143824	A1	2007-06-21	Shahbazi, Majid	
	206	20070147317	A	2007-06-28	Smith et al.	
	207	20070147324		2007-06-28	McGary, Faith	
	208	20070155365	A	2007-07-05	Kim, Sung-Jun et al.	
	209	20070165630	A1	2007-07-19	Rasanen et al.	
	210	20070168499	A	2007-07-19	Chu, Jing-Long	
	211	20070171856	A1	2007-07-26	Bruce et al.	

INFORMATION DISCLOSURE STATEMENT BY APPLICANT (Not for submission under 37 CFR 1.99)		
	Application Number	16907887
	Filing Date	2020-06-22
	First Named Inventor	RALEIGH, GREGORY
	Art Unit	2434
	Examiner Name	KAPLAN, BENJAMIN
	Attorney Docket Number	RALEP025C1C1C1C1

	212	20070174490	A1	2007-07-26	Choi et al.	
	213	20070191006	A1	2007-08-16	Carpenter	
	214	20070192460	A1	2007-08-16	Choi et al.	
	215	20070198656		2007-08-23	MAZZAFERRI et al.	
	216	20070201502	A1	2007-08-30	Abramson, Nathan	
	217	20070213054	A1	2007-09-13	Han, Seung-Wook	
	218	20070220251		2007-09-20	ROSENBERG et al.	
	219	20070226225		2007-09-27	YIU et al.	
	220	20070226775	A	2007-09-27	Andreasen et al.	
	221	20070234402	A1	2007-10-04	Khosravi et al.	
	222	20070243862		2007-10-18	COSKUN et al.	

INFORMATION DISCLOSURE STATEMENT BY APPLICANT (Not for submission under 37 CFR 1.99)		
	Application Number	16907887
	Filing Date	2020-06-22
	First Named Inventor	RALEIGH, GREGORY
	Art Unit	2434
	Examiner Name	KAPLAN, BENJAMIN
	Attorney Docket Number	RALEP025C1C1C1C1

	223	20070248100	A1	2007-10-25	Zuberi et al.	
	224	20070254646	A1	2007-11-01	Sokondar	
	225	20070254675		2007-11-01	ZORLU OZER et al.	
	226	20070255769	A1	2007-11-01	Agrawal et al.	
	227	20070255797	A1	2007-11-01	Dunn et al.	
	228	20070255848		2007-11-01	SEWALL et al.	
	229	20070257767	A1	2007-11-08	Beeson, Curt	
	230	20070259656	A	2007-11-08	Jeong, Jong Woo	
	231	20070259673		2007-11-08	WILLARS et al.	
	232	20070263558		2007-11-15	SALOMONE, Leonardo	
	233	20070266422	A1	2007-11-15	Germano et al.	

INFORMATION DISCLOSURE STATEMENT BY APPLICANT (Not for submission under 37 CFR 1.99)		
	Application Number	16907887
	Filing Date	2020-06-22
	First Named Inventor	RALEIGH, GREGORY
	Art Unit	2434
	Examiner Name	KAPLAN, BENJAMIN
	Attorney Docket Number	RALEP025C1C1C1C1

	234	20070274327		2007-11-29	KAARELA et al.	
	235	20070280453		2007-12-06	Kelley, Sean S.	
	236	20070282896		2007-12-06	WYDROUG et al.	
	237	20070293191	A1	2007-12-20	Mir et al.	
	238	20070294395		2007-12-20	STRUB et al.	
	239	20070294410	A1	2007-12-20	Pandya et al.	
	240	20070297378	A1	2007-12-27	Poyhonen et al.	
	241	20070298764		2007-12-27	CLAYTON, Steve	
	242	20070299965	A1	2007-12-27	Nieh et al.	
	243	20070300252		2007-12-27	Acharya, Swarup et al.	
	244	20080005285		2008-01-03	ROBINSON et al.	

INFORMATION DISCLOSURE STATEMENT BY APPLICANT (Not for submission under 37 CFR 1.99)		
	Application Number	16907887
	Filing Date	2020-06-22
	First Named Inventor	RALEIGH, GREGORY
	Art Unit	2434
	Examiner Name	KAPLAN, BENJAMIN
	Attorney Docket Number	RALEP025C1C1C1C1

	245	20080005561		2008-01-03	BROWN et al.	
	246	20080010379	A	2008-01-10	Zhao, Hang	
	247	20080010452		2008-01-10	HOLTZMAN et al.	
	248	20080018494	A1	2008-01-24	Waite et al.	
	249	20080022354	A	2008-01-24	Grewal, Karanvir et al.	
	250	20080025230	A	2008-01-31	Patel et al.	
	251	20080032715	A1	2008-02-07	Jia et al.	
	252	20080034063	A1	2008-02-07	Yee, Robert	
	253	20080034419	A	2008-02-07	Mullick et al.	
	254	20080039102		2008-02-14	SEWALL et al.	
	255	20080049630		2008-02-28	KOZISEK et al.	

INFORMATION DISCLOSURE STATEMENT BY APPLICANT (Not for submission under 37 CFR 1.99)	Application Number	16907887
	Filing Date	2020-06-22
	First Named Inventor	RALEIGH, GREGORY
	Art Unit	2434
	Examiner Name	KAPLAN, BENJAMIN
	Attorney Docket Number	RALEP025C1C1C1C1

	256	20080050715	A1	2008-02-28	Golczewski et al.	
	257	20080051076		2008-02-28	O'Shaughnessy, John et al.	
	258	20080052387		2008-02-28	HEINZ et al.	
	259	20080056273	A	2008-03-06	Pelletier et al.	
	260	20080059474		2008-03-06	LIM, Keng	
	261	20080059743		2008-03-06	BYCHKOV et al.	
	262	20080060066		2008-03-06	WYNN et al.	
	263	20080062900		2008-03-13	RAO, Bindu Rama	
	264	20080064367		2008-03-13	NATH et al.	
	265	20080066149		2008-03-13	LIM, Keng	
	266	20080066150		2008-03-13	LIM, Keng	

INFORMATION DISCLOSURE STATEMENT BY APPLICANT (Not for submission under 37 CFR 1.99)		
	Application Number	16907887
	Filing Date	2020-06-22
	First Named Inventor	RALEIGH, GREGORY
	Art Unit	2434
	Examiner Name	KAPLAN, BENJAMIN
	Attorney Docket Number	RALEP025C1C1C1C1

	267	20080066181	A1	2008-03-13	Haveson et al.	
	268	20080070550	A	2008-03-20	Hose, David Alan	
	269	20080077705	A1	2008-03-27	Li et al.	
	270	20080080457	A1	2008-04-03	Cole, Terry L.	
	271	20080081606		2008-04-03	COLE, Terry L.	
	272	20080082643		2008-04-03	STORRIE et al.	
	273	20080083013		2008-04-03	SOLIMAN et al.	
	274	20080085707		2008-04-10	FADELL, Tony	
	275	20080089295	A	2008-04-17	Keeler, James D. et al.	
	276	20080089303	A1	2008-04-17	Wirtanen et al.	
	277	20080095339		2008-04-24	ELLIOTT et al.	

INFORMATION DISCLOSURE STATEMENT BY APPLICANT (Not for submission under 37 CFR 1.99)		
	Application Number	16907887
	Filing Date	2020-06-22
	First Named Inventor	RALEIGH, GREGORY
	Art Unit	2434
	Examiner Name	KAPLAN, BENJAMIN
	Attorney Docket Number	RALEP025C1C1C1C1

	278	20080096559	A1	2008-04-24	Phillips et al.	
	279	20080098062		2008-04-24	BALIA, Hinal K.	
	280	20080109679		2008-05-08	WRIGHT et al.	
	281	20080120129	A	2008-05-22	Seubert et al.	
	282	20080120668		2008-05-22	Yau, Frank Chuen-Foo	
	283	20080120688		2008-05-22	QIU et al.	
	284	20080125079	A1	2008-05-29	O'Neil et al.	
	285	20080126287	A1	2008-05-29	Cox et al.	
	286	20080127304	A1	2008-05-29	Ginter et al.	
	287	20080130534		2008-06-05	TOMIOKA, Tazuko	
	288	20080130656		2008-06-05	KIM et al.	

INFORMATION DISCLOSURE STATEMENT BY APPLICANT (Not for submission under 37 CFR 1.99)	Application Number	16907887
	Filing Date	2020-06-22
	First Named Inventor	RALEIGH, GREGORY
	Art Unit	2434
	Examiner Name	KAPLAN, BENJAMIN
	Attorney Docket Number	RALEP025C1C1C1C1

	289	20080132201		2008-06-05	KARLBERG, Johan	
	290	20080132268	A1	2008-06-05	Choi-Grogan et al.	
	291	20080134330		2008-06-05	KAPOOR et al.	
	292	20080139210	A	2008-06-12	Gisby et al.	
	293	20080147454		2008-06-19	WALKER et al.	
	294	20080160958		2008-07-03	ABICHANDANI et al.	
	295	20080162637		2008-07-03	ADAMCZYK et al.	
	296	20080162704		2008-07-03	POPLETT et al.	

If you wish to add additional U.S. Published Application citation information please click the Add button. Add

FOREIGN PATENT DOCUMENTS Remove

Examiner Initial*	Cite No	Foreign Document Number[3]	Country Code[2] i	Kind Code[4]	Publication Date	Name of Patentee or Applicant of cited Document	Pages,Columns,Lines where Relevant Passages or Relevant Figures Appear	T[5]
	1	2688553	CA	A1	2008-12-04	Yoggie Security Systems, Inc.		

EFS Web 2.1.18

INFORMATION DISCLOSURE STATEMENT BY APPLICANT (Not for submission under 37 CFR 1.99)		
	Application Number	16907887
	Filing Date	2020-06-22
	First Named Inventor	RALEIGH, GREGORY
	Art Unit	2434
	Examiner Name	KAPLAN, BENJAMIN
	Attorney Docket Number	RALEP025C1C1C1C1

	2	101035308	CN	A	2006-03-09	Huawei Tech. Co. Ltd.		
	3	101080055	CN	A	2007-11-28	Tencent Technology (Shenzhen) Co., Ltd.		
	4	101115248	CN	A	2008-01-30	Lenovo Beijing Ltd.		
	5	101123553	CN	A	2007-09-11	SouTheast University		
	6	101127988	CN	A	2008-02-20	ZTE Corporation		
	7	101155343	CN	B	2006-09-29	Huawei Tech. Co. Ltd.		
	8	101183958	CN	A	2008-05-21	Huawei Tech. Co. Ltd.		
	9	101335666	CN	A	2008-12-31	Hangzhou H3C Technologies Co., Ltd.		
	10	101341764	CN	A	2009-01-07	Telefonaktiebolaget LM Ericsson		
	11	101815275	CN	A	2010-08-25	Yang, Liu		
	12	1310401	CN	A	2001-08-29	Wang, Di Xing		

INFORMATION DISCLOSURE STATEMENT BY APPLICANT (Not for submission under 37 CFR 1.99)		
	Application Number	16907887
	Filing Date	2020-06-22
	First Named Inventor	RALEIGH, GREGORY
	Art Unit	2434
	Examiner Name	KAPLAN, BENJAMIN
	Attorney Docket Number	RALEP025C1C1C1C1

	13	1345154A	CN		2002-04-17	Datang Microelectronics Tech. Co.		
	14	1508734	CN	A	2004-06-30	Chinese Creative Corp.		
	15	1538730	CN	A	2004-10-20	Zhongxing Communication Co., Ltd.		
	16	1567818	CN	A	2005-01-19	Huawei Tech. Co. Ltd.		
	17	1801829	CN	A	2006-07-12	Kunda Computer Technology (Kunshan) Co., Ltd.		
	18	1802839	CN	A	2006-07-12	Motorola Inc.		
	19	1867024	CN	A	2006-11-22	Huawei Technologies Co., Ltd.		
	20	1878160	CN	A	2006-12-13	Huawei Technologies Co., Ltd.		
	21	1889777	CN	A	2006-07-19	Huawei Tech. Co. Ltd.		
	22	1937511	CN	A	2007-03-28	ZTE		
	23	1098490	EP	A2	2001-05-09	Nortel Networks Ltd.		

INFORMATION DISCLOSURE STATEMENT BY APPLICANT (Not for submission under 37 CFR 1.99)	Application Number	16907887
	Filing Date	2020-06-22
	First Named Inventor	RALEIGH, GREGORY
	Art Unit	2434
	Examiner Name	KAPLAN, BENJAMIN
	Attorney Docket Number	RALEP025C1C1C1C1

	24	1289326	EP	A1	2003-03-05	Motorola, Inc.		
	25	1463238	EP		2004-09-29	Alcatel		
	26	1503548	EP	A1	2005-02-02	FG Microtec GmbH		
	27	1545114	EP	A1	2005-06-22	Alcatel		
	28	1739518	EP		2007-01-03	Research In Motion Limited		
	29	1772988	EP		2007-04-11	Huawei Technologies Co., Ltd.		
	30	1850575	EP	A1	2007-10-31	Research In Motion		
	31	1887732	EP	A1	2008-02-13	Huawei Technologies Co., Ltd.		
	32	1942698	EP	A1	2008-07-09	Apple Inc.		
	33	1978772	EP		2008-10-08	British Telecommunications Public Limited Company		
	34	2007065	EP	A1	2008-12-24	Huawei Technologies Co., Ltd.		

INFORMATION DISCLOSURE STATEMENT BY APPLICANT (Not for submission under 37 CFR 1.99)	Application Number	16907887
	Filing Date	2020-06-22
	First Named Inventor	RALEIGH, GREGORY
	Art Unit	2434
	Examiner Name	KAPLAN, BENJAMIN
	Attorney Docket Number	RALEP025C1C1C1C1

	35	2026514	EP	A1	2009-02-18	Nokia Siemens Networks		
	36	2005339247	JP	A	2005-12-08	Secured Communications		
	37	2006041989	JP		2006-02-09	Fujitsu Ltd.		
	38	2006155263	JP	A	2006-06-15	NEC Corporation		
	39	2006197137	JP		2006-07-27	NTT Docomo Inc.		
	40	2006344007	JP	A	2006-12-21	Hitachi Ltd.		
	41	2007318354	JP	A	2007-12-06	Fujitsu Ten Ltd.		
	42	2008301121	JP	A	2008-12-11	Kyocera Corp.		
	43	2009111919	JP		2009-05-21	Kyocera Communications Systems		
	44	2009212707	JP	A	2009-09-17	Fujitsu Ltd.		
	45	2009218773	JP		2009-09-24	Advanced Telecommunication Research Institute Inte		

INFORMATION DISCLOSURE STATEMENT BY APPLICANT (Not for submission under 37 CFR 1.99)	Application Number	16907887
	Filing Date	2020-06-22
	First Named Inventor	RALEIGH, GREGORY
	Art Unit	2434
	Examiner Name	KAPLAN, BENJAMIN
	Attorney Docket Number	RALEP025C1C1C1C1

	46	2009232107	JP	A	2009-10-08	Fujitsu Ltd.		
	47	3148713	JP	B2	2001-03-26	ATR Kankyo Tekio Tsushin Kenkyusho		
	48	20040053858	KR	A	2004-06-25	Electronics and Telecommunications Research Instit		
	49	0208863	WO		2002-01-31	Telemac Corp.		
	50	1998058505	WO		1998-12-23	Sonera Oy		

If you wish to add additional Foreign Patent Document citation information please click the Add button Add

NON-PATENT LITERATURE DOCUMENTS Remove

Examiner Initials*	Cite No	Include name of the author (in CAPITAL LETTERS), title of the article (when appropriate), title of the item (book, magazine, journal, serial, symposium, catalog, etc), date, pages(s), volume-issue number(s), publisher, city and/or country where published.	T5
	1	"Ads and movies on the run," the Gold Coast Bulletin, Southport, Qld, Jan. 29, 2008	
	2	"ASA/PIX: Allow Split Tunneling for VPN Clients on the ASA Configuration Example," Document ID 70917, January 10, 2008	
	3	"Communication Concepts for Mobile Agent Systems," by Joachim Baumann et al.; Inst. Of Parallel and Distributed High-Performance Systems, Univ. of Stuttgart, Germany, pp. 123-135, 1997	
	4	"End to End QoS Solution for Real-time Multimedia Application;" Computer Engineering and Applications, 2007, 43 (4): 155-159, by Tan Zu-guo, Wang Wen-juan; Information and Science School, Zhanjian Normal College, Zhan jiang, Guangdong 524048, China	

INFORMATION DISCLOSURE STATEMENT BY APPLICANT (Not for submission under 37 CFR 1.99)	Application Number	16907887
	Filing Date	2020-06-22
	First Named Inventor	RALEIGH, GREGORY
	Art Unit	2434
	Examiner Name	KAPLAN, BENJAMIN
	Attorney Docket Number	RALEP025C1C1C1C1

	5	"Jentro Technologies launches Zenlet platform to accelerate location-based content delivery to mobile devices," The Mobile Internet, Boston, MA, Feb. 2008	
	6	"The Construction of Intelligent Residential District in Use of Cable Television Network," Shandong Science, Vol. 13, No. 2, June 2000	
	7	3rd Generation Partnership Project, "Technical Specification Group Services and System Aspects; General Packet Radio Service (GPRS) Enhancements for Evolved Universal Terrestrial Radio Access Network (E-UTRAN) Access," Release 8, Document No. 3GPP TS 23.401, V8.4.0, December 2008	
	8	3rd Generation Partnership Project, "Technical Specification Group Services and System Aspects; Policy and Charging Control Architecture," Release 8, Document No. 3GPP TS 23.203, V8.4.0, December 2008	
	9	Accuris Networks, "The Business Value of Mobile Data Offload – a White Paper", 2010	
	10	Ahmed et al., "A Context-Aware Vertical Handover Decision Algorithm for Multimode Mobile Terminals and Its Performance," BenQ Mobile, Munich Germany; University of Klagenfurt, Klagenfurt, Austria; 2006	
	11	ALONISTIOTI et al., "Intelligent Architectures Enabling Flexible Service Provision and Adaptability," 2002	
	12	Amazon Technologies, Inc., "Kindle™ User's Guide," 3rd Edition, Copyright 2004-2009	
	13	Android Cupcake excerpts, The Android Open Source Project, Feb. 10, 2009	
	14	ANTON, B. et al., "Best Current Practices for Wireless Internet Service Provider (WISP) Roaming"; Release Date February 2003, Version 1.0; Wi-Fi Alliance – Wireless ISP Roaming (WISPr)	
	15	Blackberry Mobile Data System, version 4.1, Technical Overview, 2006	

INFORMATION DISCLOSURE STATEMENT BY APPLICANT (Not for submission under 37 CFR 1.99)	Application Number	16907887
	Filing Date	2020-06-22
	First Named Inventor	RALEIGH, GREGORY
	Art Unit	2434
	Examiner Name	KAPLAN, BENJAMIN
	Attorney Docket Number	RALEP025C1C1C1C1

	16	BYRD, "Open Secure Wireless," May 5, 2010	
	17	CHANDRASEKHAR et al., "Femtocell Networks: A Survey," June 28, 2008	
	18	CHAOUCHI et al., "Policy Based Networking in the Integration Effort of 4G Networks and Services," 2004 IEEE	
	19	Cisco Systems, Inc., "Cisco Mobile Exchange (CMX) Solution Guide: Chapter 2 - Overview of GSM, GPRS, and UMTS," November 4, 2008	
	20	Client Guide for Symantec Endpoint Protection and Symantec Network Access Control, 2007	
	21	DIKAIAKOS et al., "A Distributed Middleware Infrastructure for Personalized Services," November 24, 2003	
	22	Dixon et al., "Triple Play Digital Services: Comcast and Verizon (Digital Phone, Television, and Internet), August 2007	
	23	Droid Wall 1.3.7 description 20100428 obtained from https://www.freewarelovers.com/android/apps/droid-wall	
	24	Ehnert, "Small application to monitor IP trafic on a Blackberry - 1.01.03 ", March 27, 2008; http://www.ehnert.net/MiniMoni/	
	25	European Commission, "Data Roaming Tariffs - Transparency Measures," obtained from EUROPA - Europe's Information Society Thematic Portal website, June 24, 2011: "http://ec.europa.eu/information_society/activities/roaming/data/measures/index_en.htm."	
	26	FAROOQ et al., "An IEEE 802.16 WiMax Module for the NS-3 Simulator," March 2-6, 2009	

INFORMATION DISCLOSURE STATEMENT BY APPLICANT (Not for submission under 37 CFR 1.99)	Application Number	16907887
	Filing Date	2020-06-22
	First Named Inventor	RALEIGH, GREGORY
	Art Unit	2434
	Examiner Name	KAPLAN, BENJAMIN
	Attorney Docket Number	RALEP025C1C1C1C1

	27	Fujitsu, "Server Push Technology Survey and Bidirectional Communication in HTTP Browser," January 9, 2008 (JP)	
	28	HAN et al., "Information Collection Services for Qos-Aware Mobile Applications," 2005	
	29	HARTMANN et al., "Agent-Based Banking Transactions & Information Retrieval - What About Performance Issues?" 1999	
	30	Hewlett-Packard Development Company, LP, "IP Multimedia Services Charging," white paper, January 2006	
	31	HOSSAIN et al., "Gain-Based Selection of Ambient Media Services in Pervasive Environments," Mobile Networks and Applications. 03 October 2008	
	32	Jing et al., "Client-Server Computing in Mobile Environments," GTE Labs. Inc., Purdue University, ACM Computing Surveys, Vol. 31, No. 2, June 1999	
	33	Kasper et al., "Subscriber Authentication in mobile cellular Networks with virtual software SIM Credentials using Trusted Computing," Fraunhofer-Institute for Secure Information Technology SIT, Darmstadt, Germany; ICACT 2008	
	34	Kassar et al., "An overview of vertical handover decision strategies in heterogeneous wireless networks," ScienceDirect, University Pierre & Marie Curie, Paris, France, 6/5/2007	
	35	Kim, "Free wireless a high-wire act; MetroFi needs to draw enough ads to make service add profits," San Francisco Chronicle, Aug. 21, 2006	
	36	KNIGHT et al., "Layer 2 and 3 Virtual Private Networks: Taxonomy, Technology, and Standarization Efforts," IEEE Communications Magazine, June 2004	
	37	Koutsopoulou et al., "Charging, Accounting and Billing Management Schemes In Mobile Telecommunication Networks and the Internet," IEEE Communications Surveys & Tutorials, First Quarter 2004, Vol. 6, No. 1	

INFORMATION DISCLOSURE STATEMENT BY APPLICANT (Not for submission under 37 CFR 1.99)	Application Number	16907887
	Filing Date	2020-06-22
	First Named Inventor	RALEIGH, GREGORY
	Art Unit	2434
	Examiner Name	KAPLAN, BENJAMIN
	Attorney Docket Number	RALEP025C1C1C1C1

	38	KOUTSOPOULOU et al., "Middleware Platform for the Support of Charging Reconfiguration Actions," 2005	
	39	Kuntze et al., "Trustworthy content push," Fraunhofer-Institute for Secure Information Technology SIT; Germany; WCNC 2007 proceedings, IEEE	
	40	KYRIAKAKOS et al., "Ubiquitous Service Provision in Next Generation Mobile Networks," Proceedings of the 13th IST Mobile and Wireless Communications Summit, Lyon, France, June 2004	
	41	LI, Yu, "Dedicated E-Reading Device: The State of the Art and The Challenges," Scroll, Vol. 1, No. 1, 2008	
	42	Loopt User Guide, metroPCS, 7/17/2008	
	43	Muntermann et al., "Potentiale und Sicherheitsanforderungen mobiler Finanzinformationsdienste und deren Systeminfrastrukturen," Chair of Mobile Commerce & Multilateral Security, Goethe Univ. Frankfurt, 2004	
	44	NetLimiter Lite 4.0.19.0; http://www.heise.de/download/netlimiter-lite-3617703.html from vol. 14/2007	
	45	NILSSON et al., "A Novel MAC Scheme for Solving the QoS Parameter Adjustment Problem in IEEE802.11e EDCA," February 2006	
	46	Nuzman et al., "A compund model for TCP connection arrivals for LAN and WAN applications," Oct. 22, 2002	
	47	Open Mobile Alliance (OMA), Push Architecture, Candidate Version 2.2; Oct. 2, 2007; OMA-AD-Push-V2_2-20071002-C	
	48	OPPLIGER, Rolf, "Internet Security: Firewalls and Bey," Communications of the ACM, May 1997, Vol. 40. No. 5	

INFORMATION DISCLOSURE STATEMENT BY APPLICANT (Not for submission under 37 CFR 1.99)	Application Number	16907887
	Filing Date	2020-06-22
	First Named Inventor	RALEIGH, GREGORY
	Art Unit	2434
	Examiner Name	KAPLAN, BENJAMIN
	Attorney Docket Number	RALEP025C1C1C1C1

	49	RAO et al., "Evolution of Mobile Location-Based Services," Communication of the ACM, December 2003	
	50	Richtel, "Cellphone consumerism; If even a debit card is too slow, now you have a new way to act on impulse: [National Edition]," National Post, Canada, Oct. 2, 2007	

If you wish to add additional non-patent literature document citation information please click the Add button Add

EXAMINER SIGNATURE

Examiner Signature		Date Considered	

*EXAMINER: Initial if reference considered, whether or not citation is in conformance with MPEP 609. Draw line through a citation if not in conformance and not considered. Include copy of this form with next communication to applicant.

[1] See Kind Codes of USPTO Patent Documents at www.USPTO.GOV or MPEP 901.04. [2] Enter office that issued the document, by the two-letter code (WIPO Standard ST.3). [3] For Japanese patent documents, the indication of the year of the reign of the Emperor must precede the serial number of the patent document. [4] Kind of document by the appropriate symbols as indicated on the document under WIPO Standard ST.16 if possible. [5] Applicant is to place a check mark here if English language translation is attached.

INFORMATION DISCLOSURE STATEMENT BY APPLICANT (Not for submission under 37 CFR 1.99)	Application Number	16907887
	Filing Date	2020-06-22
	First Named Inventor	RALEIGH, GREGORY
	Art Unit	2434
	Examiner Name	KAPLAN, BENJAMIN
	Attorney Docket Number	RALEP025C1C1C1C1

CERTIFICATION STATEMENT

Please see 37 CFR 1.97 and 1.98 to make the appropriate selection(s):

That each item of information contained in the information disclosure statement was first cited in any communication from a foreign patent office in a counterpart foreign application not more than three months prior to the filing of the information disclosure statement. See 37 CFR 1.97(e)(1).

OR

☐ That no item of information contained in the information disclosure statement was cited in a communication from a foreign patent office in a counterpart foreign application, and, to the knowledge of the person signing the certification after making reasonable inquiry, no item of information contained in the information disclosure statement was known to any individual designated in 37 CFR 1.56(c) more than three months prior to the filing of the information disclosure statement. See 37 CFR 1.97(e)(2).

See attached certification statement.

The fee set forth in 37 CFR 1.17 (p) has been submitted herewith.

☒ A certification statement is not submitted herewith.

SIGNATURE

A signature of the applicant or representative is required in accordance with CFR 1.33, 10.18. Please see CFR 1.4(d) for the form of the signature.

Signature	/James E. Harris/	Date (YYYY-MM-DD)	2021-02-03
Name/Print	James E. Harris	Registration Number	40013

This collection of information is required by 37 CFR 1.97 and 1.98. The information is required to obtain or retain a benefit by the public which is to file (and by the USPTO to process) an application. Confidentiality is governed by 35 U.S.C. 122 and 37 CFR 1.14. This collection is estimated to take 1 hour to complete, including gathering, preparing and submitting the completed application form to the USPTO. Time will vary depending upon the individual case. Any comments on the amount of time you require to complete this form and/or suggestions for reducing this burden, should be sent to the Chief Information Officer, U.S. Patent and Trademark Office, U.S. Department of Commerce, P.O. Box 1450, Alexandria, VA 22313-1450. DO NOT SEND FEES OR COMPLETED FORMS TO THIS ADDRESS. **SEND TO: Commissioner for Patents, P.O. Box 1450, Alexandria, VA 22313-1450.**

Privacy Act Statement

The Privacy Act of 1974 (P.L. 93-579) requires that you be given certain information in connection with your submission of the attached form related to a patent application or patent. Accordingly, pursuant to the requirements of the Act, please be advised that: (1) the general authority for the collection of this information is 35 U.S.C. 2(b)(2); (2) furnishing of the information solicited is voluntary; and (3) the principal purpose for which the information is used by the U.S. Patent and Trademark Office is to process and/or examine your submission related to a patent application or patent. If you do not furnish the requested information, the U.S. Patent and Trademark Office may not be able to process and/or examine your submission, which may result in termination of proceedings or abandonment of the application or expiration of the patent.

The information provided by you in this form will be subject to the following routine uses:

1. The information on this form will be treated confidentially to the extent allowed under the Freedom of Information Act (5 U.S.C. 552) and the Privacy Act (5 U.S.C. 552a). Records from this system of records may be disclosed to the Department of Justice to determine whether the Freedom of Information Act requires disclosure of these record s.

2. A record from this system of records may be disclosed, as a routine use, in the course of presenting evidence to a court, magistrate, or administrative tribunal, including disclosures to opposing counsel in the course of settlement negotiations.

3. A record in this system of records may be disclosed, as a routine use, to a Member of Congress submitting a request involving an individual, to whom the record pertains, when the individual has requested assistance from the Member with respect to the subject matter of the record.

4. A record in this system of records may be disclosed, as a routine use, to a contractor of the Agency having need for the information in order to perform a contract. Recipients of information shall be required to comply with the requirements of the Privacy Act of 1974, as amended, pursuant to 5 U.S.C. 552a(m).

5. A record related to an International Application filed under the Patent Cooperation Treaty in this system of records may be disclosed, as a routine use, to the International Bureau of the World Intellectual Property Organization, pursuant to the Patent Cooperation Treaty.

6. A record in this system of records may be disclosed, as a routine use, to another federal agency for purposes of National Security review (35 U.S.C. 181) and for review pursuant to the Atomic Energy Act (42 U.S.C. 218(c)).

7. A record from this system of records may be disclosed, as a routine use, to the Administrator, General Services, or his/her designee, during an inspection of records conducted by GSA as part of that agency's responsibility to recommend improvements in records management practices and programs, under authority of 44 U.S.C. 2904 and 2906. Such disclosure shall be made in accordance with the GSA regulations governing inspection of records for this purpose, and any other relevant (i.e., GSA or Commerce) directive. Such disclosure shall not be used to make determinations about individuals.

8. A record from this system of records may be disclosed, as a routine use, to the public after either publication of the application pursuant to 35 U.S.C. 122(b) or issuance of a patent pursuant to 35 U.S.C. 151. Further, a record may be disclosed, subject to the limitations of 37 CFR 1.14, as a routine use, to the public if the record was filed in an application which became abandoned or in which the proceedings were terminated and which application is referenced by either a published application, an application open to public inspections or an issued patent.

9. A record from this system of records may be disclosed, as a routine use, to a Federal, State, or local law enforcement agency, if the USPTO becomes aware of a violation or potential violation of law or regulation.

Electronic Acknowledgement Receipt

EFS ID:	41822223
Application Number:	16907887
International Application Number:	
Confirmation Number:	2653
Title of Invention:	Security Techniques for Device Assisted Services
First Named Inventor/Applicant Name:	Gregory G. Raleigh
Customer Number:	106963
Filer:	James E. Harris/Jennifer Smith
Filer Authorized By:	James E. Harris
Attorney Docket Number:	RALEP025C1C1C1C1
Receipt Date:	03-FEB-2021
Filing Date:	22-JUN-2020
Time Stamp:	11:32:39
Application Type:	Utility under 35 USC 111(a)

Payment information:

Submitted with Payment	no

File Listing:

Document Number	Document Description	File Name	File Size(Bytes)/ Message Digest	Multi Part /.zip	Pages (if appl.)
1	Transmittal Letter	IDS_Transmittal_Letter.pdf	59396 ca4cf58aaeaa34214f2bcd223353e945d45ef666	no	2

Warnings:

Information:					
2	Information Disclosure Statement (IDS) Form (SB08)	IDS1.pdf	1059598 735082ebe6fbb6bab0018478f9bbb907ec53dd00	no	30
Warnings:					
Information:					
3	Information Disclosure Statement (IDS) Form (SB08)	IDS2.pdf	1060080 984bfa29b957b1058a1a62a209f5e48d05df189f	no	31
Warnings:					
Information:					
4	Information Disclosure Statement (IDS) Form (SB08)	IDS3.pdf	1060304 db1e253c1f021bce8a06bdd35a04facb465fb07e	no	31
Warnings:					
Information:					
5	Information Disclosure Statement (IDS) Form (SB08)	IDS4.pdf	1062819 e02a3fee18e7a1e35c004b3ee5cca17853d45ef3	no	37
Warnings:					
Information:					
6	Information Disclosure Statement (IDS) Form (SB08)	IDS5.pdf	1065534 d863c4a92e10e5d0a7496b175dc69572e002111a	no	40
Warnings:					
Information:					
7	Non Patent Literature	Sharkey_CodingforLife_BatteryLifeThatIs.pdf	5433349 c5841b904074c85de23d471b8f4b53f0ae98966e	no	32
Warnings:					
The page size in the PDF is too large. The pages should be 8.5 x 11 or A4. If this PDF is submitted, the pages will be resized upon entry into the Image File Wrapper and may affect subsequent processing					
Information:					
8	Non Patent Literature	DroidWall_137_description_20100428.pdf	96874 84793850fd98c3c1a0109472d20d3ea11023b3b3	no	2
Warnings:					

Information:					
9	Non Patent Literature	Byrd_Open_Secure_Wireless.pdf	1672989 5ecd2433a4ab6b614636b33a926addcec08dda6b	no	5
Warnings:					
Information:					
			Total Files Size (in bytes):	12570943	

This Acknowledgement Receipt evidences receipt on the noted date by the USPTO of the indicated documents, characterized by the applicant, and including page counts, where applicable. It serves as evidence of receipt similar to a Post Card, as described in MPEP 503.

New Applications Under 35 U.S.C. 111
If a new application is being filed and the application includes the necessary components for a filing date (see 37 CFR 1.53(b)-(d) and MPEP 506), a Filing Receipt (37 CFR 1.54) will be issued in due course and the date shown on this Acknowledgement Receipt will establish the filing date of the application.
National Stage of an International Application under 35 U.S.C. 371
If a timely submission to enter the national stage of an international application is compliant with the conditions of 35 U.S.C. 371 and other applicable requirements a Form PCT/DO/EO/903 indicating acceptance of the application as a national stage submission under 35 U.S.C. 371 will be issued in addition to the Filing Receipt, in due course.
New International Application Filed with the USPTO as a Receiving Office
If a new international application is being filed and the international application includes the necessary components for an international filing date (see PCT Article 11 and MPEP 1810), a Notification of the International Application Number and of the International Filing Date (Form PCT/RO/105) will be issued in due course, subject to prescriptions concerning national security, and the date shown on this Acknowledgement Receipt will establish the international filing date of the application.

IN THE UNITED STATES PATENT AND TRADEMARK OFFICE

In re Application of:	Raleigh et al.	Examiner:	KAPLAN, BENJAMIN
Serial No.:	16/907,887	Art Unit:	2434
Filed:	June 22, 2020	Conf. No.:	2653
Title:	Security Techniques for Device Assisted Services		

Mail Stop Amendment
Commissioner for Patents
P.O. Box 1450
Alexandria, VA 22313-1450

INFORMATION DISCLOSURE STATEMENT

The references cited on attached form PTO/SB/08A are being called to the attention of the Examiner. Copies of the references are not enclosed.

In accordance with 37 CFR §1.98(d), copies of the references can be found in related U.S. Patent Application No. 16/034,362 filed July 13, 2018, of which the instant application is a continuation, or in related U.S. Patent Application No. 14/948,065 filed on November 20, 2015, of which 16/034,362 is a continuation.

It is respectfully requested that the cited references be expressly considered during the prosecution of this application, and the references be made of record therein and appear among the "references cited" on any patent to issue therefrom.

As provided for by 37 CFR § 1.97(g) and (h), no inference should be made that the information and references cited are prior art merely because they are in this statement and no

representation is being made that a search has been conducted or that this statement encompasses all the possible relevant information.

Applicant believes that no fee is required for submission of this statement, but if for any reason an insufficient fee has been paid, please charge the insufficiency to Deposit Account No. **50-5876**.

Respectfully submitted,

Date: February 3, 2021

By: /James E. Harris/

James E. Harris
Reg. No. 40,013
Patent Counsel
Headwater Research LLC
1011 Pruitt Place
Tyler, TX 75703
(903) 201-6212

CERTIFICATE OF ELECTRONIC TRANSMISSION

I hereby certify that this paper (along with any paper referred to as being attached or enclosed) is being filed electronically via EFS-Web addressed to the Commissioner for Patents on:

Date: February 3, 2021

By: /Jennifer Smith/
Jennifer Smith

PTO/SB/08a (02-18)
Approved for use through 11/30/2020. OMB 0651-0031
U.S. Patent and Trademark Office; U.S. DEPARTMENT OF COMMERCE
Under the Paperwork Reduction Act of 1995, no persons are required to respond to a collection of information unless it contains a valid OMB control number.

INFORMATION DISCLOSURE STATEMENT BY APPLICANT

(Not for submission under 37 CFR 1.99)

Application Number	16907887
Filing Date	2020-06-22
First Named Inventor	RALEIGH, GREGORY
Art Unit	2434
Examiner Name	KAPLAN, BENJAMIN
Attorney Docket Number	RALEP025C1C1C1C1

U.S.PATENTS Remove

Examiner Initial*	Cite No	Patent Number	Kind Code[1]	Issue Date	Name of Patentee or Applicant of cited Document	Pages,Columns,Lines where Relevant Passages or Relevant Figures Appear
	1	5131020	A	1992-07-14	Liebesny et al.	
	2	5283904		1994-02-01	CARSON, David G. et al.	
	3	5325532	A	1994-06-28	Crosswy et al.	
	4	5572528	A	1996-11-05	Shuen, Pauline	
	5	5577100	A	1996-11-19	McGregor et al.	
	6	5594777		1997-01-14	Makkonen, Matti et al.	
	7	5617539	A	1997-04-01	Ludwig et al.	
	8	5630159	A	1997-05-13	Zancho, William F.	

INFORMATION DISCLOSURE STATEMENT BY APPLICANT (Not for submission under 37 CFR 1.99)		
	Application Number	16907887
	Filing Date	2020-06-22
	First Named Inventor	RALEIGH, GREGORY
	Art Unit	2434
	Examiner Name	KAPLAN, BENJAMIN
	Attorney Docket Number	RALEP025C1C1C1C1

	9	5633484	A	1997-05-27	Zancho, William F. et al.	
	10	5633868	A	1997-05-27	Baldwin et al.	
	11	5754953	A	1998-05-19	Briancon et al.	
	12	5774532	A	1998-06-30	Gottlieb et al.	
	13	5794142		1998-08-11	VANTTILA et al.	
	14	5814798	A	1998-09-29	Zancho, William F.	
	15	5889477		1999-03-30	Fastenrath, Ulrich	
	16	5892900		1999-04-06	GINTER et al.	
	17	5903845		1999-05-11	BUHRMANN et al.	
	18	5915008	A	1999-06-22	Dulman, Scott	
	19	5915226	A	1999-06-22	Martineau	

INFORMATION DISCLOSURE STATEMENT BY APPLICANT (Not for submission under 37 CFR 1.99)	Application Number	16907887
	Filing Date	2020-06-22
	First Named Inventor	RALEIGH, GREGORY
	Art Unit	2434
	Examiner Name	KAPLAN, BENJAMIN
	Attorney Docket Number	RALEP025C1C1C1C1

	20	5933778		1999-08-03	BUHRMANN et al.	
	21	5940472		1999-08-17	NEWMAN et al.	
	22	5974439	A	1999-10-26	Bollella, Gregory	
	23	5983270	A	1999-11-09	Abraham et al.	
	24	6035281		2000-03-07	Crosskey, James P. et al.	
	25	6038452		2000-03-14	Strawczynski, Leo et al.	
	26	6038540	A	2000-03-14	Krist et al.	
	27	6047268		2000-04-04	BARTOLI et al.	
	28	6058434	A	2000-05-02	Wilt et al.	
	29	6061571	A	2000-05-09	Tamura, Hideo	
	30	6064878		2000-05-16	DENKER, John Stewart et al.	

INFORMATION DISCLOSURE STATEMENT BY APPLICANT (Not for submission under 37 CFR 1.99)	Application Number	16907887
	Filing Date	2020-06-22
	First Named Inventor	RALEIGH, GREGORY
	Art Unit	2434
	Examiner Name	KAPLAN, BENJAMIN
	Attorney Docket Number	RALEP025C1C1C1C1

	31	6078953		2000-06-20	VAID et al.	
	32	6081591		2000-06-27	SKOOG, Frederick H.	
	33	6098878		2000-08-08	DENT et al.	
	34	6104700	A	2000-08-15	Haddock, Stephen R. et al.	
	35	6115823	A	2000-09-05	Velasco et al.	
	36	6119933	A	2000-09-19	Wong et al.	
	37	6125391	A	2000-09-26	Meltzer et al.	
	38	6141565	A	2000-10-31	Feuerstein et al.	
	39	6141686		2000-10-31	JACKOWSKI et al.	
	40	6148336		2000-11-14	THOMAS et al.	
	41	6154738		2000-11-28	CALL, Charles Gainor	

INFORMATION DISCLOSURE STATEMENT BY APPLICANT (Not for submission under 37 CFR 1.99)		
	Application Number	16907887
	Filing Date	2020-06-22
	First Named Inventor	RALEIGH, GREGORY
	Art Unit	2434
	Examiner Name	KAPLAN, BENJAMIN
	Attorney Docket Number	RALEP025C1C1C1C1

	42	6157636	A	2000-12-05	Voit et al.	
	43	6185576	B1	2001-02-06	Mcintosh, Lowrie	
	44	6198915		2001-03-06	McGREGOR et al.	
	45	6219786	B1	2001-04-17	Cunningham et al.	
	46	6226277		2001-05-01	Chuah, Mooi Choo	
	47	6246870	B1	2001-06-12	Dent et al.	
	48	6263055		2001-07-17	GARLAND et al.	
	49	6292828		2001-09-18	Williams, David L.	
	50	6317584		2001-11-13	ABU-AMARA et al.	
	51	6370139	B2	2002-04-09	Redmond	
	52	6381316		2002-04-30	JOYCE, Simon James et al.	

INFORMATION DISCLOSURE STATEMENT BY APPLICANT (Not for submission under 37 CFR 1.99)		
	Application Number	16907887
	Filing Date	2020-06-22
	First Named Inventor	RALEIGH, GREGORY
	Art Unit	2434
	Examiner Name	KAPLAN, BENJAMIN
	Attorney Docket Number	RALEP025C1C1C1C1

	53	6393014	B1	2002-05-21	Daly et al.	
	54	6397259	B1	2002-05-28	Lincke et al.	
	55	6401113	B2	2002-06-04	Lazaridis et al.	
	56	6418147		2002-07-09	WIEDEMAN, Robert A.	
	57	6438575	B1	2002-08-20	Khan et al.	
	58	6445777	B1	2002-09-03	Clark, Curtis	
	59	6449479		2002-09-10	SANCHEZ, Eduardo	
	60	6466984	B1	2002-10-15	Naveh et al.	
	61	6477670		2002-11-05	Ahmadvand, Nima	
	62	6502131		2002-12-31	VAID, Aseem et al.	
	63	6505114		2003-01-07	LUCIANI, Sergio	

INFORMATION DISCLOSURE STATEMENT BY APPLICANT (Not for submission under 37 CFR 1.99)		
	Application Number	16907887
	Filing Date	2020-06-22
	First Named Inventor	RALEIGH, GREGORY
	Art Unit	2434
	Examiner Name	KAPLAN, BENJAMIN
	Attorney Docket Number	RALEP025C1C1C1C1

	64	6510152	B1	2003-01-21	Gerszberg et al.	
	65	6522629	B1	2003-02-18	Anderson, Sr., Ronald D.	
	66	6532235		2003-03-11	BENSON et al.	
	67	6532579		2003-03-11	SATO et al.	
	68	6535855	B1	2003-03-18	Cahill et al.	
	69	6535949	B1	2003-03-18	Parker, Kenneth W.	
	70	6539082		2003-03-25	LOWE et al.	
	71	6542500	B1	2003-04-01	Gerszberg et al.	
	72	6542992		2003-04-01	Peirce, Kenneth L. et al.	
	73	6546016	B1	2003-04-08	Gerszberg et al.	
	74	6563806		2003-05-13	YANO et al.	

INFORMATION DISCLOSURE STATEMENT BY APPLICANT (Not for submission under 37 CFR 1.99)		
	Application Number	16907887
	Filing Date	2020-06-22
	First Named Inventor	RALEIGH, GREGORY
	Art Unit	2434
	Examiner Name	KAPLAN, BENJAMIN
	Attorney Docket Number	RALEP025C1C1C1C1

	75	6570974	B1	2003-05-27	Gerszberg et al.	
	76	6574321		2003-06-03	COX et al.	
	77	6574465		2003-06-03	MARSH et al.	
	78	6578076	B1	2003-06-10	Putzolu, David Matthew	
	79	6581092		2003-06-17	MOTOYAMA, Tetsuro	
	80	6591098	B1	2003-07-08	Shieh et al.	
	81	6598034	B1	2003-07-22	Kloth, Axel K.	
	82	6601040	B1	2003-07-29	Kolls, H. Brock	
	83	6603969		2003-08-05	VUORISTO et al.	
	84	6603975	B1	2003-08-05	Inouchi et al.	
	85	6606744		2003-08-12	MIKURAK, Michael G.	

INFORMATION DISCLOSURE STATEMENT BY APPLICANT (Not for submission under 37 CFR 1.99)		
	Application Number	16907887
	Filing Date	2020-06-22
	First Named Inventor	RALEIGH, GREGORY
	Art Unit	2434
	Examiner Name	KAPLAN, BENJAMIN
	Attorney Docket Number	RALEP025C1C1C1C1

	86	6628934	A	2003-09-30	Rosenberg et al.	
	87	6631122		2003-10-07	ARUNACHALAM, Vaidhyanathan et al.	
	88	6636721	B2	2003-10-21	Threadgill et al.	
	89	6639975	B1	2003-10-28	O'Neal et al.	
	90	6640097		2003-10-28	Corrigan, Louis et al.	
	91	6640334	B	2003-10-28	Rasmussen, John H.	
	92	6650887		2003-11-18	McGREGOR et al.	
	93	6651101		2003-11-18	GAI et al.	
	94	6654786	B1	2003-11-25	Fox et al.	
	95	6654814		2003-11-25	Britton, Kathryn H. et al.	
	96	6658254		2003-12-02	PURDY et al.	

INFORMATION DISCLOSURE STATEMENT BY APPLICANT (Not for submission under 37 CFR 1.99)		
	Application Number	16907887
	Filing Date	2020-06-22
	First Named Inventor	RALEIGH, GREGORY
	Art Unit	2434
	Examiner Name	KAPLAN, BENJAMIN
	Attorney Docket Number	RALEP025C1C1C1C1

	97	6662014	B1	2003-12-09	Walsh, Patrick Jay	
	98	6678516	B2	2004-01-13	Nordman et al.	
	99	6683853		2004-01-27	Kannas, Chris et al.	
	100	6684244		2004-01-27	GOLDMAN et al.	
	101	6690918	B2	2004-02-10	Evans et al.	
	102	6694362	B1	2004-02-17	Secor et al.	
	103	6697821	B2	2004-02-24	Ziff et al.	
	104	6725031		2004-04-20	WATLER et al.	
	105	6725256	B1	2004-04-20	Albal et al.	
	106	6732176	B1	2004-05-04	Stewart et al.	
	107	6735206	B1	2004-05-11	Oki et al.	

INFORMATION DISCLOSURE STATEMENT BY APPLICANT (Not for submission under 37 CFR 1.99)		
	Application Number	16907887
	Filing Date	2020-06-22
	First Named Inventor	RALEIGH, GREGORY
	Art Unit	2434
	Examiner Name	KAPLAN, BENJAMIN
	Attorney Docket Number	RALEP025C1C1C1C1

	108	6748195	B1	2004-06-08	Phillips, W. Garland	
	109	6748437	B1	2004-06-08	Mankude et al.	
	110	6751296	B1	2004-06-15	Albal et al.	
	111	6754470		2004-06-22	Hendrickson, Keith et al.	
	112	6757717	B1	2004-06-29	Goldstein, Leonid	
	113	6760417	B1	2004-07-06	Wallenius, Jukka	
	114	6763000		2004-07-13	WALSH, Peter J.	
	115	6763226	B1	2004-07-13	McZeal Jr., Alfred	
	116	6765864		2004-07-20	NATARAJAN et al.	
	117	6765925		2004-07-20	Sawyer, Wilson et al.	
	118	6782412		2004-08-24	BROPHY, Kevin et al.	

INFORMATION DISCLOSURE STATEMENT BY APPLICANT (Not for submission under 37 CFR 1.99)	Application Number	16907887
	Filing Date	2020-06-22
	First Named Inventor	RALEIGH, GREGORY
	Art Unit	2434
	Examiner Name	KAPLAN, BENJAMIN
	Attorney Docket Number	RALEP025C1C1C1C1

	119	6785889		2004-08-31	WILLIAMS, Peter	
	120	6792461	B1	2004-09-14	Hericourt, Olivier	

If you wish to add additional U.S. Patent citation information please click the Add button. Add

U.S.PATENT APPLICATION PUBLICATIONS Remove

Examiner Initial*	Cite No	Publication Number	Kind Code[1]	Publication Date	Name of Patentee or Applicant of cited Document	Pages,Columns,Lines where Relevant Passages or Relevant Figures Appear
	1	20080164304		2008-07-10	NARASIMHAN et al.	
	2	20080166993	A1	2008-07-10	Gautier et al.	
	3	20080167027		2008-07-10	GAUTIER et al.	
	4	20080167033		2008-07-10	BECKERS, Michel	
	5	20080168275	A1	2008-07-10	DeAtley et al.	
	6	20080168523		2008-07-10	ANSARI et al.	
	7	20080177998		2008-07-24	APSANGI et al.	

INFORMATION DISCLOSURE STATEMENT BY APPLICANT (Not for submission under 37 CFR 1.99)		
	Application Number	16907887
	Filing Date	2020-06-22
	First Named Inventor	RALEIGH, GREGORY
	Art Unit	2434
	Examiner Name	KAPLAN, BENJAMIN
	Attorney Docket Number	RALEP025C1C1C1C1

	8	20080178300	A1	2008-07-24	Brown et al.	
	9	20080181117	A1	2008-07-31	ACKE et al.	
	10	20080183812		2008-07-31	PAUL et al.	
	11	20080184127		2008-07-31	RAFEY et al.	
	12	20080189760		2008-08-07	ROSENBERG et al.	
	13	20080201266	A	2008-08-21	Chua et al.	
	14	20080207167		2008-08-28	BUGENHAGEN, Michael K.	
	15	20080212470		2008-09-04	CASTANEDA et al.	
	16	20080212751	A1	2008-09-04	Chung, Simon	
	17	20080219268		2008-09-11	DENNISON, Larry R.	
	18	20080221951		2008-09-11	STANFORTH et al.	

INFORMATION DISCLOSURE STATEMENT BY APPLICANT (Not for submission under 37 CFR 1.99)		
	Application Number	16907887
	Filing Date	2020-06-22
	First Named Inventor	RALEIGH, GREGORY
	Art Unit	2434
	Examiner Name	KAPLAN, BENJAMIN
	Attorney Docket Number	RALEP025C1C1C1C1

	19	20080222692		2008-09-11	ANDERSSON et al.	
	20	20080225748		2008-09-18	KHEMANI et al.	
	21	20080229385		2008-09-18	FEDER et al.	
	22	20080229388		2008-09-18	MAES, Stephane H.	
	23	20080235511		2008-09-25	O'BRIEN, William G. et al.	
	24	20080240373		2008-10-02	WILHELM, Robert D.	
	25	20080250053	A	2008-10-09	Aaltonen, Janne et al.	
	26	20080256593		2008-10-16	VINBERG et al.	
	27	20080259924	A1	2008-10-23	Gooch et al.	
	28	20080262798		2008-10-23	KIM, Eun Ah et al.	
	29	20080263348	A	2008-10-23	Zaltsman et al.	

INFORMATION DISCLOSURE STATEMENT BY APPLICANT (Not for submission under 37 CFR 1.99)	Application Number	16907887
	Filing Date	2020-06-22
	First Named Inventor	RALEIGH, GREGORY
	Art Unit	2434
	Examiner Name	KAPLAN, BENJAMIN
	Attorney Docket Number	RALEP025C1C1C1C1

	30	20080268813		2008-10-30	MAES, Stephane H.	
	31	20080270212	A	2008-10-30	Blight et al.	
	32	20080279216	A1	2008-11-13	Sharif-Ahmadi et al.	
	33	20080282319	A1	2008-11-13	Fontijn et al.	
	34	20080291872	A1	2008-11-27	Henriksson	
	35	20080293395	A1	2008-11-27	Mathews et al.	
	36	20080298230		2008-12-04	LUFT et al.	
	37	20080305793		2008-12-11	GALLAGHER et al.	
	38	20080311885		2008-12-18	DAWSON et al.	
	39	20080313315	A	2008-12-18	Karaoguz et al.	
	40	20080313730		2008-12-18	Iftimie, Sorin et al.	

INFORMATION DISCLOSURE STATEMENT BY APPLICANT (Not for submission under 37 CFR 1.99)		
	Application Number	16907887
	Filing Date	2020-06-22
	First Named Inventor	RALEIGH, GREGORY
	Art Unit	2434
	Examiner Name	KAPLAN, BENJAMIN
	Attorney Docket Number	RALEP025C1C1C1C1

	41	20080316923		2008-12-25	FEDDERS et al.	
	42	20080318547		2008-12-25	BALLOU et al.	
	43	20080318550		2008-12-25	DeATLEY, Dallas	
	44	20080319879		2008-12-25	CARROLL et al.	
	45	20080320497	A1	2008-12-25	Tarkoma et al.	
	46	20090005000	A	2009-01-01	Baker, Matthew et al.	
	47	20090005005		2009-01-01	FORSTALL et al.	
	48	20090006116	A	2009-01-01	Baker, Matthew et al.	
	49	20090006200	A	2009-01-01	Baker, Matthew et al.	
	50	20090006229	A1	2009-01-01	Sweeney et al.	
	51	20090013157		2009-01-08	BEAULE, Stephane	

INFORMATION DISCLOSURE STATEMENT BY APPLICANT (Not for submission under 37 CFR 1.99)	Application Number	16907887
	Filing Date	2020-06-22
	First Named Inventor	RALEIGH, GREGORY
	Art Unit	2434
	Examiner Name	KAPLAN, BENJAMIN
	Attorney Docket Number	RALEP025C1C1C1C1

	52	20090016310	A1	2009-01-15	Rasal, Digambar L.	
	53	20090017809	A1	2009-01-15	Jethi et al.	
	54	20090036111	A1	2009-02-05	Danford et al.	
	55	20090042536	A1	2009-02-12	Bernard et al.	
	56	20090044185	A1	2009-02-12	Krivopaltsev, Eugene	
	57	20090046707	A1	2009-02-19	Smires et al.	
	58	20090046723		2009-02-19	RAHMAN, Reshad A. et al.	
	59	20090047989	A1	2009-02-19	Harmon et al.	
	60	20090048913	A1	2009-02-19	Shenfield et al.	
	61	20090049156	A1	2009-02-19	Aronsson et al.	
	62	20090049518	A1	2009-02-19	Roman et al.	

INFORMATION DISCLOSURE STATEMENT BY APPLICANT (Not for submission under 37 CFR 1.99)		
	Application Number	16907887
	Filing Date	2020-06-22
	First Named Inventor	RALEIGH, GREGORY
	Art Unit	2434
	Examiner Name	KAPLAN, BENJAMIN
	Attorney Docket Number	RALEP025C1C1C1C1

	63	20090054030		2009-02-26	GOLDS, David	
	64	20090065571	A1	2009-03-12	Jain, Deepak	
	65	20090067372		2009-03-12	SHAH, Keyur C. et al.	
	66	20090068984		2009-03-12	BURNETT, R. Alan	
	67	20090070379	A1	2009-03-12	Rappaport, Theodore R.	
	68	20090077622		2009-03-19	BAUM et al.	
	69	20090079699		2009-03-26	SUN, Jian	
	70	20090113514		2009-04-30	HU, Q. James	
	71	20090125619		2009-05-14	ANTANI, Snehal S.	
	72	20090132860	A1	2009-05-21	LIU et al.	
	73	20090149154	A1	2009-06-11	Bhasin et al.	

INFORMATION DISCLOSURE STATEMENT BY APPLICANT (Not for submission under 37 CFR 1.99)		
	Application Number	16907887
	Filing Date	2020-06-22
	First Named Inventor	RALEIGH, GREGORY
	Art Unit	2434
	Examiner Name	KAPLAN, BENJAMIN
	Attorney Docket Number	RALEP025C1C1C1C1

	74	20090157792	A1	2009-06-18	Fiatal	
	75	20090163173	A1	2009-06-25	Williams, Timothy D.	
	76	20090172077		2009-07-02	ROXBURGH, David et al.	
	77	20090180391		2009-07-16	PETERSEN et al.	
	78	20090181662	A1	2009-07-16	Fleischman et al.	
	79	20090197585		2009-08-06	AARON, Jeffrey A.	
	80	20090197612	A1	2009-08-06	Kiiskinen, Arto	
	81	20090203352	A1	2009-08-13	Fordon et al.	
	82	20090217065	A1	2009-08-27	Araujo JR.	
	83	20090217364	A1	2009-08-27	Salmela et al.	
	84	20090219170		2009-09-03	CLARK, Ryan C. et al.	

INFORMATION DISCLOSURE STATEMENT BY APPLICANT (Not for submission under 37 CFR 1.99)	Application Number	16907887
	Filing Date	2020-06-22
	First Named Inventor	RALEIGH, GREGORY
	Art Unit	2434
	Examiner Name	KAPLAN, BENJAMIN
	Attorney Docket Number	RALEP025C1C1C1C1

	85	20090248883		2009-10-01	SURYANARAYANA et al.	
	86	20090254857	A	2009-10-08	Romine et al.	
	87	20090257379		2009-10-15	ROBINSON et al.	
	88	20090262715	A1	2009-10-22	Juang	
	89	20090271514		2009-10-29	THOMAS et al.	
	90	20090282127	A	2009-11-12	Leblanc et al.	
	91	20090286507		2009-11-19	O'NEIL et al.	
	92	20090287921		2009-11-19	ZHU et al.	
	93	20090288140	A1	2009-11-19	Huber et al.	
	94	20090291665	A1	2009-11-26	Gaskarth et al.	
	95	20090299857		2009-12-03	BRUBAKER, Curtis M.	

INFORMATION DISCLOSURE STATEMENT BY APPLICANT (Not for submission under 37 CFR 1.99)	Application Number	16907887
	Filing Date	2020-06-22
	First Named Inventor	RALEIGH, GREGORY
	Art Unit	2434
	Examiner Name	KAPLAN, BENJAMIN
	Attorney Docket Number	RALEP025C1C1C1C1

	96	20090307696	A1	2009-12-10	Vals et al.	
	97	20090307746	A1	2009-12-10	DI et al.	
	98	20090315735		2009-12-24	BHAVANI, Neeraj S. et al.	
	99	20090320110	A1	2009-12-24	NICOLSON et al.	
	100	20100017506		2010-01-21	FADELL, Anthony	
	101	20100020822		2010-01-28	ZERILLO, Anthony J. et al.	
	102	20100027469	A1	2010-02-04	Gurajala et al.	
	103	20100027559		2010-02-04	LIN, Hung-Ming et al.	
	104	20100030890	A	2010-02-04	Dutta et al.	
	105	20100041364		2010-02-18	LOTT, Robert Wayne et al.	
	106	20100041365	A1	2010-02-18	Lott et al.	

INFORMATION DISCLOSURE STATEMENT BY APPLICANT (Not for submission under 37 CFR 1.99)		
	Application Number	16907887
	Filing Date	2020-06-22
	First Named Inventor	RALEIGH, GREGORY
	Art Unit	2434
	Examiner Name	KAPLAN, BENJAMIN
	Attorney Docket Number	RALEP025C1C1C1C1

	107	20100041391	A1	2010-02-18	Spivey et al.	
	108	20100042675		2010-02-18	FUJII, Hiroshi	
	109	20100043068		2010-02-18	VARADHAN et al.	
	110	20100069074	A1	2010-03-18	Kodialam et al.	
	111	20100071053		2010-03-18	ANSARI et al.	
	112	20100075666	A1	2010-03-25	Garner, Neil Robert	
	113	20100077035	A1	2010-03-25	Li et al.	
	114	20100080202		2010-04-01	Hanson, Mark	
	115	20100082431		2010-04-01	RAMER et al.	
	116	20100088387	A1	2010-04-08	Calamera	
	117	20100103820		2010-04-29	FULLER et al.	

INFORMATION DISCLOSURE STATEMENT BY APPLICANT (Not for submission under 37 CFR 1.99)	Application Number	16907887
	Filing Date	2020-06-22
	First Named Inventor	RALEIGH, GREGORY
	Art Unit	2434
	Examiner Name	KAPLAN, BENJAMIN
	Attorney Docket Number	RALEP025C1C1C1C1

	118	20100113020	A1	2010-05-06	Subramanian et al.	
	119	20100121744	A1	2010-05-13	Belz et al.	
	120	20100131584		2010-05-27	Johnson, William J.	
	121	20100142478	A1	2010-06-10	Forssell et al.	
	122	20100144310		2010-06-10	BEDINGFIELD, James Carlton	
	123	20100151866	A1	2010-06-17	Karpov et al.	
	124	20100153781		2010-06-17	HANNA, Stephen R.	
	125	20100167696	A	2010-07-01	Smith, Christopher David et al.	
	126	20100188975		2010-07-29	RALEIGH, Gregory G.	
	127	20100188990		2010-07-29	RALEIGH, Gregory G.	
	128	20100188992		2010-07-29	RALEIGH, Gregory G.	

INFORMATION DISCLOSURE STATEMENT BY APPLICANT (Not for submission under 37 CFR 1.99)		
	Application Number	16907887
	Filing Date	2020-06-22
	First Named Inventor	RALEIGH, GREGORY
	Art Unit	2434
	Examiner Name	KAPLAN, BENJAMIN
	Attorney Docket Number	RALEP025C1C1C1C1

	129	20100188994		2010-07-29	RALEIGH, Gregory G.	
	130	20100190469	A1	2010-07-29	Vanderveen et al.	
	131	20100191576		2010-07-29	RALEIGH, Gregory G.	
	132	20100191612		2010-07-29	RALEIGH, Gregory G.	
	133	20100191846		2010-07-29	RALEIGH, Gregory G.	
	134	20100192170		2010-07-29	RALEIGH, Gregory G.	
	135	20100192212		2010-07-29	RALEIGH, Gregory G.	
	136	20100195503		2010-08-05	RALEIGH, Gregory G.	
	137	20100197268		2010-08-05	RALEIGH, Gregory G.	
	138	20100198698		2010-08-05	RALEIGH et al.	
	139	20100198939		2010-08-05	RALEIGH, Gregory G.	

INFORMATION DISCLOSURE STATEMENT BY APPLICANT (Not for submission under 37 CFR 1.99)	Application Number	16907887
	Filing Date	2020-06-22
	First Named Inventor	RALEIGH, GREGORY
	Art Unit	2434
	Examiner Name	KAPLAN, BENJAMIN
	Attorney Docket Number	RALEP025C1C1C1C1

	140	20100235329	A	2010-09-16	Koren et al.	
	141	20100241544		2010-09-23	Benson, Dan et al.	
	142	20100248719	A1	2010-09-30	Scholaert, Hugh	
	143	20100284327	A	2010-11-11	Miklos, Gyorgy	
	144	20100284388	A1	2010-11-11	Fantini et al.	
	145	20100287599	A1	2010-11-11	He et al.	
	146	20100311402	A1	2010-12-09	Srinivasan et al.	
	147	20100325420		2010-12-23	KANEKAR, Tushar	
	148	20110004917	A1	2011-01-06	Saisa et al.	
	149	20110013569	A	2011-01-20	Scherzer, Shimon et al.	
	150	20110019574	A	2011-01-27	Malomsoky et al.	

INFORMATION DISCLOSURE STATEMENT BY APPLICANT (Not for submission under 37 CFR 1.99)	Application Number	16907887
	Filing Date	2020-06-22
	First Named Inventor	RALEIGH, GREGORY
	Art Unit	2434
	Examiner Name	KAPLAN, BENJAMIN
	Attorney Docket Number	RALEP025C1C1C1C1

	151	20110081881	A	2011-04-07	Baker, Matthew Donald et al.	
	152	20110082790	A	2011-04-07	Baker, Matthew Donald et al.	
	153	20110110309	A	2011-05-12	Bennett, James D.	
	154	20110126141		2011-05-26	KING et al.	
	155	20110145920	A1	2011-06-16	Mahaffey et al.	
	156	20110159818	A	2011-06-30	Scherzer, Shimon et al.	
	157	20110173678		2011-07-14	KAIPPALLIMALIL, John et al.	
	158	20110177811	A1	2011-07-21	Heckman et al.	
	159	20110182220	A1	2011-07-28	Black et al.	
	160	20110185202	A1	2011-07-28	Black et al.	
	161	20110244837	A1	2011-10-06	MURATA et al.	

INFORMATION DISCLOSURE STATEMENT BY APPLICANT (Not for submission under 37 CFR 1.99)		
	Application Number	16907887
	Filing Date	2020-06-22
	First Named Inventor	RALEIGH, GREGORY
	Art Unit	2434
	Examiner Name	KAPLAN, BENJAMIN
	Attorney Docket Number	RALEP025C1C1C1C1

	162	20110249668	A1	2011-10-13	Milligan et al.	
	163	20110264923	A	2011-10-27	Kocher et al.	
	164	20110277019	A1	2011-11-10	John Russell Pritchard Jr.	
	165	20120020296	A	2012-01-26	Scherzer, Shimon et al.	
	166	20120144025	A1	2012-06-07	Melander et al.	
	167	20120166364	A1	2012-06-28	Ahmad et al.	
	168	20120196644	A	2012-08-02	Scherzer, Shimon et al.	
	169	20120238287	A	2012-09-20	Scherzer, Shimon	
	170	20130029653	A	2013-01-31	Baker, Matthew Donald et al.	
	171	20130058274	A	2013-03-07	Scherzer, Shimon et al.	
	172	20130065555	A	2013-03-14	Baker, Matthew Donald et al.	

INFORMATION DISCLOSURE STATEMENT BY APPLICANT (Not for submission under 37 CFR 1.99)		
	Application Number	16907887
	Filing Date	2020-06-22
	First Named Inventor	RALEIGH, GREGORY
	Art Unit	2434
	Examiner Name	KAPLAN, BENJAMIN
	Attorney Docket Number	RALEP025C1C1C1C1

	173	20130072177	A1	2013-03-21	Ross et al.	
	174	20130084835	A	2013-04-04	Scherzer, Shimon et al.	
	175	20130144789		2013-06-06	Aaltonen, Janne et al.	
	176	20130225151	A1	2013-08-29	King et al.	
	177	20130326356	A9	2013-12-05	Zheng et al.	
	178	20140073291	A1	2014-03-13	Hildner et al.	
	179	20140241342	A1	2014-08-28	Constantinof, Cristian	
	180	20150181628	A1	2015-06-25	Haverinen et al.	

If you wish to add additional U.S. Published Application citation information please click the Add button. Add

FOREIGN PATENT DOCUMENTS Remove

Examiner Initial*	Cite No	Foreign Document Number[3]	Country Code[2] i	Kind Code[4]	Publication Date	Name of Patentee or Applicant of cited Document	Pages,Columns,Lines where Relevant Passages or Relevant Figures Appear	T[5]
	1	1999027723	WO		1999-06-03	Telefonaktiebolaget LM Ericsson		

EFS Web 2.1.18

INFORMATION DISCLOSURE STATEMENT BY APPLICANT (Not for submission under 37 CFR 1.99)		
	Application Number	16907887
	Filing Date	2020-06-22
	First Named Inventor	RALEIGH, GREGORY
	Art Unit	2434
	Examiner Name	KAPLAN, BENJAMIN
	Attorney Docket Number	RALEP025C1C1C1C1

	2	1999065185	WO	A3	2001-05-03	Briscoe et al.		
	3	2002045315	WO	A2	2002-06-06	Micromuse		
	4	2002067616	WO	A1	2002-08-29	Sonera Oyj		
	5	2002093877	WO	A1	2002-11-21	Nokia Corp.		
	6	2003014891	WO		2003-02-20	The Boeing Company		
	7	2003017063	WO	A2	2003-02-27	Apogee Networks		
	8	2003017065	WO	A2	2003-02-27	Apogee Networks		
	9	2003058880	WO	A1	2003-07-17	Eriksson et al.		
	10	2004028070	WO	A1	2004-04-01	Mann et al.		
	11	2004064306	WO	A2	2004-07-29	Wild et al.		
	12	2004077797	WO	A3	2008-02-07	Erskine et al.		

INFORMATION DISCLOSURE STATEMENT BY APPLICANT (Not for submission under 37 CFR 1.99)		
	Application Number	16907887
	Filing Date	2020-06-22
	First Named Inventor	RALEIGH, GREGORY
	Art Unit	2434
	Examiner Name	KAPLAN, BENJAMIN
	Attorney Docket Number	RALEP025C1C1C1C1

	13	2004095753	WO	A3	2005-01-13	Adwankar et al.		
	14	2005008995	WO		2005-01-27	Starhub Ltd.		
	15	2005053335	WO	A1	2005-06-09	Nokia Corp.		
	16	2005083934	WO	A1	2005-09-09	Research In Motion Ltd.		
	17	2006004467	WO	A1	2006-01-12	Skog et al.		
	18	2006004784	WO	A1	2006-01-12	Japan Communications Inc.		
	19	2006012610	WO	A2	2006-02-02	Citrix Systems, Inc.		
	20	2006050758	WO	A1	2006-05-18	Boman		
	21	2006073837	WO	A3	2009-04-02	D'agostino, Anthony		
	22	2006077481	WO	A1	2006-07-27	Chane et al.		
	23	2006093961	WO	A1	2006-09-08	Kyocera Wireless Corp.		

INFORMATION DISCLOSURE STATEMENT BY APPLICANT (Not for submission under 37 CFR 1.99)	Application Number	16907887
	Filing Date	2020-06-22
	First Named Inventor	RALEIGH, GREGORY
	Art Unit	2434
	Examiner Name	KAPLAN, BENJAMIN
	Attorney Docket Number	RALEP025C1C1C1C1

	24	2006120558	WO		2006-11-16	Nokia Corp.		
	25	2006130960	WO	A1	2006-12-14	Sharif-Ahmadi et al.		
	26	2007001833	WO	A2	2007-01-04	Linsley-Hood et al.		
	27	2007014630	WO	A1	2007-02-08	Norrman et al.		
	28	2007018363	WO	A1	2007-02-15	Son		
	29	2007053848	WO	A1	2007-05-10	Germano et al.		
	30	2007068288	WO		2007-06-21	Telefonaktiebolaget LM Ericsson		
	31	2007069245	WO	A3	2009-04-16	Touboul		
	32	2007097786	WO	A	2007-08-30	Sony Ericsson Mobile Communications AB		
	33	2007107701	WO	A2	2007-09-27	Cofta		
	34	2007120310	WO		2007-10-25	Qualcomm Inc.		

INFORMATION DISCLOSURE STATEMENT BY APPLICANT (Not for submission under 37 CFR 1.99)		
	Application Number	16907887
	Filing Date	2020-06-22
	First Named Inventor	RALEIGH, GREGORY
	Art Unit	2434
	Examiner Name	KAPLAN, BENJAMIN
	Attorney Docket Number	RALEP025C1C1C1C1

	35	2007124279	WO		2007-11-01	Cisco Technology, Inc., et al.		
	36	2007126352	WO		2007-11-08	Telefonaktiebolaget LM Ericsson		
	37	2007129180	WO	A2	2007-11-15	Nokia Corp.		
	38	2007133844	WO	A	2007-11-22	Camiant, Inc.		
	39	2008017837	WO	A1	2008-02-14	Spooner		
	40	2008051379	WO	A2	2008-05-02	Balia		
	41	2008066419	WO	A1	2008-06-05	LIDSTRÖM et al.		
	42	2008080139	WO	A1	2008-07-03	Pugh et al.		
	43	2008080430	WO	A1	2008-07-10	Costa et al.		
	44	2008099802	WO	A1	2008-08-21	Awano		
	45	2009008817	WO	A1	2009-01-15	Ericsson		

INFORMATION DISCLOSURE STATEMENT BY APPLICANT (Not for submission under 37 CFR 1.99)	Application Number	16907887
	Filing Date	2020-06-22
	First Named Inventor	RALEIGH, GREGORY
	Art Unit	2434
	Examiner Name	KAPLAN, BENJAMIN
	Attorney Docket Number	RALEP025C1C1C1C1

	46	2009091295	WO	A1	2009-07-23	Telefonaktiebolaget LM Ericsson		
	47	2010088413	WO	A1	2010-08-05	Raleigh		
	48	2010128391	WO	A2	2010-11-11	Bridgewater Systems Corp.		
	49	2010128391	WO	A3	2011-01-20	Momtahan et al.		
	50	2011002450	WO	A1	2011-01-06	Alcatel-Lucent USA Inc.		

If you wish to add additional Foreign Patent Document citation information please click the Add button Add

NON-PATENT LITERATURE DOCUMENTS Remove

Examiner Initials*	Cite No	Include name of the author (in CAPITAL LETTERS), title of the article (when appropriate), title of the item (book, magazine, journal, serial, symposium, catalog, etc), date, pages(s), volume-issue number(s), publisher, city and/or country where published.	T5
	1	Rivadeneyra et al., "A communication architecture to access data services through GSM," San Sebastian, Spain, 1998	
	2	Ruckus Wireless – White Paper; "Smarter Wi-Fi for Mobile Operator Infrastructures" 2010	
	3	Sabat, "The evolving mobile wireless value chain and market structure," Nov. 2002	
	4	Sadeh et al., "Understanding and Capturing People's Privacy Policies in a Mobile Social Networking Application," ISR School of Computer Science, Carnegie Mellon University, 2007	

INFORMATION DISCLOSURE STATEMENT BY APPLICANT (Not for submission under 37 CFR 1.99)	Application Number	16907887
	Filing Date	2020-06-22
	First Named Inventor	RALEIGH, GREGORY
	Art Unit	2434
	Examiner Name	KAPLAN, BENJAMIN
	Attorney Docket Number	RALEP025C1C1C1C1

	5	Schiller et al., "Location-Based Services," The Morgan Kaufmann Series in Data Management Systems, 2004	
	6	SHARKEY, "Coding for Life--Battery Life, That Is," May 27, 2009	
	7	STEGLICH, Stephan, "I-Centric User Interaction," November 21, 2003	
	8	Sun et al., "Towards Connectivity Management Adaptability: Context Awareness in Policy Representation and End-to-end Evaluation Algorithm," Dept. of Electrical and Information Engineering, Univ. of Oulu, Finland, 2004	
	9	VAN EIJK, et al., "GigaMobile, Agent Technology for Designing Personalized Mobile Service Brokerage," July 1, 2002	
	10	VerizonWireless.com news, "Verizon Wireless Adds to Portfolio of Cosumer-Friendly Tools With Introduction of Usage Controls, Usage Controls and Chaperone 2.0 Offer Parents Full Family Security Solution," August 18, 2008	
	11	Windows7 Power Management, published April 2009	
	12	Wireless Broadband Alliance, "WISPr 2.0, 08 April, 2010"; Doc. Ref. No.: WBA/RM/WISPr, Version 01.00	
	13	ZHU et al., "A Survey of Quality of Service in IEEE 802.11 Networks," IEEE Wireless Communications, August 2004	

If you wish to add additional non-patent literature document citation information please click the Add button Add

EXAMINER SIGNATURE

Examiner Signature		Date Considered	

*EXAMINER: Initial if reference considered, whether or not citation is in conformance with MPEP 609. Draw line through a citation if not in conformance and not considered. Include copy of this form with next communication to applicant.

EFS Web 2.1.18

INFORMATION DISCLOSURE STATEMENT BY APPLICANT (Not for submission under 37 CFR 1.99)	Application Number	16907887
	Filing Date	2020-06-22
	First Named Inventor	RALEIGH, GREGORY
	Art Unit	2434
	Examiner Name	KAPLAN, BENJAMIN
	Attorney Docket Number	RALEP025C1C1C1C1

[1] See Kind Codes of USPTO Patent Documents at www.USPTO.GOV or MPEP 901.04. [2] Enter office that issued the document, by the two-letter code (WIPO Standard ST.3). [3] For Japanese patent documents, the indication of the year of the reign of the Emperor must precede the serial number of the patent document. [4] Kind of document by the appropriate symbols as indicated on the document under WIPO Standard ST.16 if possible. [5] Applicant is to place a check mark here if English language translation is attached.

INFORMATION DISCLOSURE STATEMENT BY APPLICANT (Not for submission under 37 CFR 1.99)		
	Application Number	16907887
	Filing Date	2020-06-22
	First Named Inventor	RALEIGH, GREGORY
	Art Unit	2434
	Examiner Name	KAPLAN, BENJAMIN
	Attorney Docket Number	RALEP025C1C1C1C1

CERTIFICATION STATEMENT

Please see 37 CFR 1.97 and 1.98 to make the appropriate selection(s):

That each item of information contained in the information disclosure statement was first cited in any communication from a foreign patent office in a counterpart foreign application not more than three months prior to the filing of the information disclosure statement. See 37 CFR 1.97(e)(1).

OR

☐ That no item of information contained in the information disclosure statement was cited in a communication from a foreign patent office in a counterpart foreign application, and, to the knowledge of the person signing the certification after making reasonable inquiry, no item of information contained in the information disclosure statement was known to any individual designated in 37 CFR 1.56(c) more than three months prior to the filing of the information disclosure statement. See 37 CFR 1.97(e)(2).

See attached certification statement.

The fee set forth in 37 CFR 1.17 (p) has been submitted herewith.

☒ A certification statement is not submitted herewith.

SIGNATURE

A signature of the applicant or representative is required in accordance with CFR 1.33, 10.18. Please see CFR 1.4(d) for the form of the signature.

Signature	/James E. Harris/	Date (YYYY-MM-DD)	2021-02-03
Name/Print	James E. Harris	Registration Number	40013

This collection of information is required by 37 CFR 1.97 and 1.98. The information is required to obtain or retain a benefit by the public which is to file (and by the USPTO to process) an application. Confidentiality is governed by 35 U.S.C. 122 and 37 CFR 1.14. This collection is estimated to take 1 hour to complete, including gathering, preparing and submitting the completed application form to the USPTO. Time will vary depending upon the individual case. Any comments on the amount of time you require to complete this form and/or suggestions for reducing this burden, should be sent to the Chief Information Officer, U.S. Patent and Trademark Office, U.S. Department of Commerce, P.O. Box 1450, Alexandria, VA 22313-1450. DO NOT SEND FEES OR COMPLETED FORMS TO THIS ADDRESS. **SEND TO: Commissioner for Patents, P.O. Box 1450, Alexandria, VA 22313-1450.**

Privacy Act Statement

The Privacy Act of 1974 (P.L. 93-579) requires that you be given certain information in connection with your submission of the attached form related to a patent application or patent. Accordingly, pursuant to the requirements of the Act, please be advised that: (1) the general authority for the collection of this information is 35 U.S.C. 2(b)(2); (2) furnishing of the information solicited is voluntary; and (3) the principal purpose for which the information is used by the U.S. Patent and Trademark Office is to process and/or examine your submission related to a patent application or patent. If you do not furnish the requested information, the U.S. Patent and Trademark Office may not be able to process and/or examine your submission, which may result in termination of proceedings or abandonment of the application or expiration of the patent.

The information provided by you in this form will be subject to the following routine uses:

1. The information on this form will be treated confidentially to the extent allowed under the Freedom of Information Act (5 U.S.C. 552) and the Privacy Act (5 U.S.C. 552a). Records from this system of records may be disclosed to the Department of Justice to determine whether the Freedom of Information Act requires disclosure of these record s.

2. A record from this system of records may be disclosed, as a routine use, in the course of presenting evidence to a court, magistrate, or administrative tribunal, including disclosures to opposing counsel in the course of settlement negotiations.

3. A record in this system of records may be disclosed, as a routine use, to a Member of Congress submitting a request involving an individual, to whom the record pertains, when the individual has requested assistance from the Member with respect to the subject matter of the record.

4. A record in this system of records may be disclosed, as a routine use, to a contractor of the Agency having need for the information in order to perform a contract. Recipients of information shall be required to comply with the requirements of the Privacy Act of 1974, as amended, pursuant to 5 U.S.C. 552a(m).

5. A record related to an International Application filed under the Patent Cooperation Treaty in this system of records may be disclosed, as a routine use, to the International Bureau of the World Intellectual Property Organization, pursuant to the Patent Cooperation Treaty.

6. A record in this system of records may be disclosed, as a routine use, to another federal agency for purposes of National Security review (35 U.S.C. 181) and for review pursuant to the Atomic Energy Act (42 U.S.C. 218(c)).

7. A record from this system of records may be disclosed, as a routine use, to the Administrator, General Services, or his/her designee, during an inspection of records conducted by GSA as part of that agency's responsibility to recommend improvements in records management practices and programs, under authority of 44 U.S.C. 2904 and 2906. Such disclosure shall be made in accordance with the GSA regulations governing inspection of records for this purpose, and any other relevant (i.e., GSA or Commerce) directive. Such disclosure shall not be used to make determinations about individuals.

8. A record from this system of records may be disclosed, as a routine use, to the public after either publication of the application pursuant to 35 U.S.C. 122(b) or issuance of a patent pursuant to 35 U.S.C. 151. Further, a record may be disclosed, subject to the limitations of 37 CFR 1.14, as a routine use, to the public if the record was filed in an application which became abandoned or in which the proceedings were terminated and which application is referenced by either a published application, an application open to public inspections or an issued patent.

9. A record from this system of records may be disclosed, as a routine use, to a Federal, State, or local law enforcement agency, if the USPTO becomes aware of a violation or potential violation of law or regulation.

PTO/SB/08a (02-18)
Approved for use through 11/30/2020. OMB 0651-0031
U.S. Patent and Trademark Office; U.S. DEPARTMENT OF COMMERCE
Under the Paperwork Reduction Act of 1995, no persons are required to respond to a collection of information unless it contains a valid OMB control number.

INFORMATION DISCLOSURE STATEMENT BY APPLICANT

(Not for submission under 37 CFR 1.99)

Application Number	16907887
Filing Date	2020-06-22
First Named Inventor	RALEIGH, GREGORY
Art Unit	2434
Examiner Name	KAPLAN, BENJAMIN
Attorney Docket Number	RALEP025C1C1C1C1

U.S.PATENTS Remove

Examiner Initial*	Cite No	Patent Number	Kind Code[1]	Issue Date	Name of Patentee or Applicant of cited Document	Pages,Columns,Lines where Relevant Passages or Relevant Figures Appear
	1	7778643		2010-08-17	Laroia, Rajiv et al.	
	2	7792257	B1	2010-09-07	Vanier et al.	
	3	7792538		2010-09-07	Kozisek, Steven E.	
	4	7792708		2010-09-07	ALVA, Jessi	
	5	7797019	B2	2010-09-14	Friedmann	
	6	7797060	B2	2010-09-14	Grgic et al.	
	7	7797204		2010-09-14	BALENT, Bruce F.	
	8	7797401		2010-09-14	STEWART et al.	

INFORMATION DISCLOSURE STATEMENT BY APPLICANT (Not for submission under 37 CFR 1.99)		
	Application Number	16907887
	Filing Date	2020-06-22
	First Named Inventor	RALEIGH, GREGORY
	Art Unit	2434
	Examiner Name	KAPLAN, BENJAMIN
	Attorney Docket Number	RALEP025C1C1C1C1

	9	7801523		2010-09-21	Kenderov, Stoyan	
	10	7801783	B2	2010-09-21	Kende et al.	
	11	7801985	B1	2010-09-21	Pitkow, Jim et al.	
	12	7802724		2010-09-28	Nohr, Steven Paul	
	13	7805140	B2	2010-09-28	Friday et al.	
	14	7805522	B2	2010-09-28	Schlüter et al.	
	15	7805606	B2	2010-09-28	Birger et al.	
	16	7809351	B1	2010-10-05	Panda et al.	
	17	7809372	B2	2010-10-05	Rajaniemi, Jaakko	
	18	7813746	B2	2010-10-12	Rajkotia, Purva R.	
	19	7817615	B1	2010-10-19	Breau et al.	

INFORMATION DISCLOSURE STATEMENT BY APPLICANT (Not for submission under 37 CFR 1.99)	Application Number	16907887
	Filing Date	2020-06-22
	First Named Inventor	RALEIGH, GREGORY
	Art Unit	2434
	Examiner Name	KAPLAN, BENJAMIN
	Attorney Docket Number	RALEP025C1C1C1C1

	20	7817983	B2	2010-10-19	Cassett et al.	
	21	7822837		2010-10-26	URBAN et al.	
	22	7822849	B2	2010-10-26	Titus	
	23	7826427	B2	2010-11-02	Sood et al.	
	24	7826607	B1	2010-11-02	De Carvalho Resende et al.	
	25	7835275	B1	2010-11-16	Swan et al.	
	26	7843831	B2	2010-11-30	Morrill et al.	
	27	7843843	B1	2010-11-30	Papp III et al.	
	28	7844034	B1	2010-11-30	Oh et al.	
	29	7844728	B2	2010-11-30	Anderson et al.	
	30	7848768		2010-12-07	OMORI et al.	

INFORMATION DISCLOSURE STATEMENT BY APPLICANT (Not for submission under 37 CFR 1.99)		
	Application Number	16907887
	Filing Date	2020-06-22
	First Named Inventor	RALEIGH, GREGORY
	Art Unit	2434
	Examiner Name	KAPLAN, BENJAMIN
	Attorney Docket Number	RALEP025C1C1C1C1

	31	7849161	B2	2010-12-07	Koch et al.	
	32	7849170	B1	2010-12-07	Hargens et al.	
	33	7849477	B2	2010-12-07	Cristofalo et al.	
	34	7853255	B2	2010-12-14	Karaoguz et al.	
	35	7853656	B2	2010-12-14	Yach et al.	
	36	7856226		2010-12-21	WONG, Ellis L. et al.	
	37	7860088	B2	2010-12-28	Lioy, Marcello	
	38	7865182		2011-01-04	Macaluso, Anthony G.	
	39	7865187	B2	2011-01-04	Ramer et al.	
	40	7868778		2011-01-11	KENWRIGHT, David Norris	
	41	7873001	B2	2011-01-18	Silver, Andrew	

INFORMATION DISCLOSURE STATEMENT BY APPLICANT (Not for submission under 37 CFR 1.99)		
	Application Number	16907887
	Filing Date	2020-06-22
	First Named Inventor	RALEIGH, GREGORY
	Art Unit	2434
	Examiner Name	KAPLAN, BENJAMIN
	Attorney Docket Number	RALEP025C1C1C1C1

	42	7873344		2011-01-18	BOWSER, Robert et al.	
	43	7873346	B2	2011-01-18	Petersson et al.	
	44	7873540	B2	2011-01-18	Arumugam, Avin	
	45	7873705		2011-01-18	KALISH, Dan	
	46	7877090		2011-01-25	Maes, Stephane H.	
	47	7881199		2011-02-01	KRSTULICH, Zlatko	
	48	7881697	B2	2011-02-01	Baker, Matthew Donald et al.	
	49	7882029		2011-02-01	WHITE, Craig R.	
	50	7882247	B2	2011-02-01	Sturniolo et al.	
	51	7882560	B2	2011-02-01	Kraemer et al.	
	52	7886047		2011-02-08	POTLURI, Dora	

INFORMATION DISCLOSURE STATEMENT BY APPLICANT (Not for submission under 37 CFR 1.99)		
	Application Number	16907887
	Filing Date	2020-06-22
	First Named Inventor	RALEIGH, GREGORY
	Art Unit	2434
	Examiner Name	KAPLAN, BENJAMIN
	Attorney Docket Number	RALEP025C1C1C1C1

	53	7889384	B2	2011-02-15	Armentrout et al.	
	54	7890084		2011-02-15	Dudziak, Thaddeus Jude et al.	
	55	7890111		2011-02-15	Bugenhagen, Michael K.	
	56	7894431	B2	2011-02-22	Goring et al.	
	57	7899039	B2	2011-03-01	Andreasen et al.	
	58	7899438	B2	2011-03-01	Baker, Matthew Donald et al.	
	59	7903553		2011-03-08	Liu, Enhui	
	60	7907970		2011-03-15	Park, Vincent D. et al.	
	61	7908358	B1	2011-03-15	Prasad et al.	
	62	7911975		2011-03-22	DROZ, Patrick et al.	
	63	7912025		2011-03-22	Pattenden, Christopher E. S. et al.	

INFORMATION DISCLOSURE STATEMENT BY APPLICANT (Not for submission under 37 CFR 1.99)		
	Application Number	16907887
	Filing Date	2020-06-22
	First Named Inventor	RALEIGH, GREGORY
	Art Unit	2434
	Examiner Name	KAPLAN, BENJAMIN
	Attorney Docket Number	RALEP025C1C1C1C1

	64	7912056		2011-03-22	BRASSEM, Wayne	
	65	7920529		2011-04-05	MAHLER, Roger et al.	
	66	7921463		2011-04-05	Sood, Kapil et al.	
	67	7925740	B2	2011-04-12	Nath et al.	
	68	7925778	B1	2011-04-12	Wijnands et al.	
	69	7929959	B2	2011-04-19	DeAtley, Dallas et al.	
	70	7929960		2011-04-19	MARTIN et al.	
	71	7929973		2011-04-19	Zavalkovsky, Arthur et al.	
	72	7930327	B2	2011-04-19	Craft David et al.	
	73	7930446	B2	2011-04-19	Kesselman, Alex et al.	
	74	7930553	B2	2011-04-19	Satarasinghe et al.	

INFORMATION DISCLOSURE STATEMENT BY APPLICANT (Not for submission under 37 CFR 1.99)		
	Application Number	16907887
	Filing Date	2020-06-22
	First Named Inventor	RALEIGH, GREGORY
	Art Unit	2434
	Examiner Name	KAPLAN, BENJAMIN
	Attorney Docket Number	RALEP025C1C1C1C1

	75	7933274	B2	2011-04-26	Verma et al.	
	76	7936736	B2	2011-05-03	Proctor Jr. et al.	
	77	7937069		2011-05-03	RASSAM, Frederic	
	78	7937450	B2	2011-05-03	Janik, Craig M.	
	79	7940685	B1	2011-05-10	Breslau, Lee et al.	
	80	7940751		2011-05-10	Hansen, Christopher J.	
	81	7941184		2011-05-10	PRENDERGAST et al.	
	82	7944948		2011-05-17	Chow, Albert T. et al.	
	83	7945238	B2	2011-05-17	Baker, Matthew Donald et al.	
	84	7945240		2011-05-17	KLOCK, Jacqueline et al.	
	85	7945945		2011-05-17	Graham, Richard et al.	

INFORMATION DISCLOSURE STATEMENT BY APPLICANT (Not for submission under 37 CFR 1.99)		
	Application Number	16907887
	Filing Date	2020-06-22
	First Named Inventor	RALEIGH, GREGORY
	Art Unit	2434
	Examiner Name	KAPLAN, BENJAMIN
	Attorney Docket Number	RALEP025C1C1C1C1

	86	7948952		2011-05-24	HURTTA, Tuija et al.	
	87	7948953	B2	2011-05-24	Melkote, Keerti G. et al.	
	88	7948968		2011-05-24	Voit, Eric A. et al.	
	89	7949529		2011-05-24	WEIDER et al.	
	90	7953808		2011-05-31	SHARP et al.	
	91	7953877	B2	2011-05-31	Vemula et al.	
	92	7957020		2011-06-07	MINE, Ryuta et al.	
	93	7957381	B2	2011-06-07	Clermidy et al.	
	94	7957511		2011-06-07	DRUDIS et al.	
	95	7958029	B1	2011-06-07	Bobich et al.	
	96	7962622		2011-06-14	Friend, John et al.	

INFORMATION DISCLOSURE STATEMENT BY APPLICANT (Not for submission under 37 CFR 1.99)		
	Application Number	16907887
	Filing Date	2020-06-22
	First Named Inventor	RALEIGH, GREGORY
	Art Unit	2434
	Examiner Name	KAPLAN, BENJAMIN
	Attorney Docket Number	RALEP025C1C1C1C1

	97	7965983		2011-06-21	SWAN, Tim et al.	
	98	7966405	B2	2011-06-21	Sundaresan et al.	
	99	7969950	B2	2011-06-28	Iyer, Pradeep J. et al.	
	100	7970350		2011-06-28	SHEYNMAN, Arnold	
	101	7970426		2011-06-28	Poe, Brian R. et al.	
	102	7974624		2011-07-05	Gallagher, Michael D. et al.	
	103	7975184		2011-07-05	GOFF et al.	
	104	7978627		2011-07-12	TAYLOR, William Scott et al.	
	105	7978686	B2	2011-07-12	Goyal et al.	
	106	7979069	B2	2011-07-12	Hupp et al.	
	107	7979889	B2	2011-07-12	Gladstone et al.	

INFORMATION DISCLOSURE STATEMENT BY APPLICANT (Not for submission under 37 CFR 1.99)		
	Application Number	16907887
	Filing Date	2020-06-22
	First Named Inventor	RALEIGH, GREGORY
	Art Unit	2434
	Examiner Name	KAPLAN, BENJAMIN
	Attorney Docket Number	RALEP025C1C1C1C1

	108	7979896	B2	2011-07-12	McMurtry et al.	
	109	7984130		2011-07-19	BOGINENI et al.	
	110	7984511	B2	2011-07-19	Kocher Paul et al.	
	111	7986935		2011-07-26	D'SOUZA et al.	
	112	7987496	B2	2011-07-26	Bryce et al.	
	113	7987510	B2	2011-07-26	Kocher et al.	
	114	7990049	B2	2011-08-02	Shioya, Shunsuke	
	115	8000276	B2	2011-08-16	Scherzer, Shimon et al.	
	116	8000318		2011-08-16	Wiley, William L. et al.	
	117	8005009		2011-08-23	McKee, Neil et al.	
	118	8005459		2011-08-23	BALSILLIE, Jim	

INFORMATION DISCLOSURE STATEMENT BY APPLICANT (Not for submission under 37 CFR 1.99)		
	Application Number	16907887
	Filing Date	2020-06-22
	First Named Inventor	RALEIGH, GREGORY
	Art Unit	2434
	Examiner Name	KAPLAN, BENJAMIN
	Attorney Docket Number	RALEP025C1C1C1C1

	119	8005726	B1	2011-08-23	Bao, Yulin	
	120	8005913	B1	2011-08-23	Carlander, Carrie	
	121	8005988		2011-08-23	MAES, Stephane H.	
	122	8010080		2011-08-30	THENTHIRUPERAI et al.	
	123	8010081		2011-08-30	ROSKOWSKI, Steve	
	124	8010082	B2	2011-08-30	Sutaria et al.	
	125	8010990	B2	2011-08-30	Ferguson et al.	
	126	8015133		2011-09-06	WU et al.	
	127	8015234		2011-09-06	LUM et al.	
	128	8015249	B2	2011-09-06	Nayak et al.	
	129	8019687		2011-09-13	WANG et al.	

INFORMATION DISCLOSURE STATEMENT BY APPLICANT (Not for submission under 37 CFR 1.99)		
	Application Number	16907887
	Filing Date	2020-06-22
	First Named Inventor	RALEIGH, GREGORY
	Art Unit	2434
	Examiner Name	KAPLAN, BENJAMIN
	Attorney Docket Number	RALEP025C1C1C1C1

	130	8019820		2011-09-13	Son, Giyeong et al.	
	131	8019846	B2	2011-09-13	Roelens et al.	
	132	8019868		2011-09-13	RAO, Goutham et al.	
	133	8019886	B2	2011-09-13	Harrang, Jeffrey Paul et al.	
	134	8023425	B2	2011-09-20	Raleigh	
	135	8024397		2011-09-20	ERICKSON, Richard R. et al.	
	136	8024424	B2	2011-09-20	Freimuth et al.	
	137	8027339	B2	2011-09-27	Short, Joel E. et al.	
	138	8031601	B2	2011-10-04	Feroz et al.	
	139	8032168	B2	2011-10-04	Ikaheimo, Jorma	
	140	8032409	B1	2011-10-04	Mikurak	

INFORMATION DISCLOSURE STATEMENT BY APPLICANT (Not for submission under 37 CFR 1.99)		
	Application Number	16907887
	Filing Date	2020-06-22
	First Named Inventor	RALEIGH, GREGORY
	Art Unit	2434
	Examiner Name	KAPLAN, BENJAMIN
	Attorney Docket Number	RALEP025C1C1C1C1

	141	8032899	B2	2011-10-04	Archer, Charles J. et al.	
	142	8036387	B2	2011-10-11	Kudelski et al.	
	143	8036600		2011-10-11	Garrett, Darrin et al.	
	144	8044792	B2	2011-10-25	Orr et al.	
	145	8045973	B2	2011-10-25	Chambers, Michael D.	
	146	8046449	B2	2011-10-25	Yoshiuchi, Hideya	
	147	8050275		2011-11-01	IYER, Jayaraman R.	
	148	8050690	B2	2011-11-01	Neeraj, Chawla	
	149	8050705	B2	2011-11-01	Sicher et al.	
	150	8059530		2011-11-15	Cole, Terry L.	
	151	8060017	B2	2011-11-15	Schlicht et al.	

INFORMATION DISCLOSURE STATEMENT BY APPLICANT (Not for submission under 37 CFR 1.99)		
	Application Number	16907887
	Filing Date	2020-06-22
	First Named Inventor	RALEIGH, GREGORY
	Art Unit	2434
	Examiner Name	KAPLAN, BENJAMIN
	Attorney Docket Number	RALEP025C1C1C1C1

	152	8060463		2011-11-15	Spiegel, Joel R.	
	153	8060603	B2	2011-11-15	CAUNTER et al.	
	154	8064418	B2	2011-11-22	Maki, Lasse	
	155	8064896		2011-11-22	BELL, Kris M. et al.	
	156	8065365	B2	2011-11-22	Saxena et al.	
	157	8068824		2011-11-29	SHAN, Xueshan et al.	
	158	8068829	B2	2011-11-29	Lemond, Eric et al.	
	159	8073427	B2	2011-12-06	Koch et al.	
	160	8073721		2011-12-06	Lewis, Lundy	
	161	8078140	B2	2011-12-13	Baker, Matthew Donald et al.	
	162	8078163	B2	2011-12-13	Lemond, Eric et al.	

INFORMATION DISCLOSURE STATEMENT BY APPLICANT (Not for submission under 37 CFR 1.99)		
	Application Number	16907887
	Filing Date	2020-06-22
	First Named Inventor	RALEIGH, GREGORY
	Art Unit	2434
	Examiner Name	KAPLAN, BENJAMIN
	Attorney Docket Number	RALEP025C1C1C1C1

	163	8085808	B2	2011-12-27	Brusca et al.	
	164	8086398	B2	2011-12-27	Sanchez et al.	
	165	8086497	B1	2011-12-27	Oakes III, Charles Lee	
	166	8086791	B2	2011-12-27	Caulkins, Jason	
	167	8090359		2012-01-03	Proctor Jr., James Arthur et al.	
	168	8090361	B2	2012-01-03	Hagan, Guy R.	
	169	8090616		2012-01-03	Proctor Jr., James Arthur et al.	
	170	8091087	B2	2012-01-03	Ali et al.	
	171	8094551		2012-01-10	HUBER, Kurt Donald et al.	
	172	8095112	B2	2012-01-10	Chow, Richard et al.	
	173	8095124	B2	2012-01-10	Balia, HInal K.	

INFORMATION DISCLOSURE STATEMENT BY APPLICANT (Not for submission under 37 CFR 1.99)	Application Number	16907887
	Filing Date	2020-06-22
	First Named Inventor	RALEIGH, GREGORY
	Art Unit	2434
	Examiner Name	KAPLAN, BENJAMIN
	Attorney Docket Number	RALEP025C1C1C1C1

	174	8095640	B2	2012-01-10	Guingo et al.	
	175	8095666		2012-01-10	SCHMIDT et al.	
	176	8098579		2012-01-17	Ray, Amar N. et al.	
	177	8099077		2012-01-17	CHOWDHURY et al.	
	178	8099517		2012-01-17	JIA et al.	
	179	8102814		2012-01-24	RAHMAN, Shahriar I. et al.	
	180	8103285	B2	2012-01-24	Kalhan, Amit	
	181	8104080	B2	2012-01-24	Burns et al.	
	182	8107953	B2	2012-01-31	Zimmerman et al.	
	183	8108520		2012-01-31	Ruutu, Jussi et al.	
	184	8108680	B2	2012-01-31	Murray	

INFORMATION DISCLOSURE STATEMENT BY APPLICANT (Not for submission under 37 CFR 1.99)		
	Application Number	16907887
	Filing Date	2020-06-22
	First Named Inventor	RALEIGH, GREGORY
	Art Unit	2434
	Examiner Name	KAPLAN, BENJAMIN
	Attorney Docket Number	RALEP025C1C1C1C1

	185	8112435	B2	2012-02-07	Epstein et al.	
	186	8116223		2012-02-14	TIAN, Dan et al.	
	187	8116749		2012-02-14	Proctor Jr., James Arthur et al.	
	188	8116781	B2	2012-02-14	Chen, Xixian et al.	
	189	8122128		2012-02-21	Burke, II, Robert M. et al.	
	190	8122249		2012-02-21	Falk, Rainer et al.	
	191	8125897	B2	2012-02-28	Ray et al.	
	192	8126123		2012-02-28	Cai, Yigang et al.	
	193	8126396	B2	2012-02-28	Bennett, James D.	
	194	8126476	B2	2012-02-28	Vardi, Yosef et al.	
	195	8126722		2010-02-28	ROBB, Terence Alan et al.	

INFORMATION DISCLOSURE STATEMENT BY APPLICANT (Not for submission under 37 CFR 1.99)		
	Application Number	16907887
	Filing Date	2020-06-22
	First Named Inventor	RALEIGH, GREGORY
	Art Unit	2434
	Examiner Name	KAPLAN, BENJAMIN
	Attorney Docket Number	RALEP025C1C1C1C1

	196	8130793	B2	2012-03-06	Edwards, Stephen K. et al.	
	197	8131256		2012-03-06	MARTTI, Jyrki et al.	
	198	8131281	B1	2012-03-06	Hildner et al.	
	199	8131840	B1	2012-03-06	Denker, Richard E.	
	200	8131858	B2	2012-03-06	Agulnik et al.	
	201	8132256	B2	2012-03-06	Bari, Farooq	
	202	8134954	B2	2012-03-13	Godfrey, James A. et al.	
	203	8135388		2012-03-13	Gailloux, Michael A. et al.	
	204	8135392		2012-03-13	MARCELLINO et al.	
	205	8135657		2012-03-13	Kapoor, Harsh et al.	
	206	8140690	B2	2012-03-20	Ly et al.	

INFORMATION DISCLOSURE STATEMENT BY APPLICANT (Not for submission under 37 CFR 1.99)	Application Number	16907887
	Filing Date	2020-06-22
	First Named Inventor	RALEIGH, GREGORY
	Art Unit	2434
	Examiner Name	KAPLAN, BENJAMIN
	Attorney Docket Number	RALEP025C1C1C1C1

	207	8144591		2012-03-27	GHAI et al.	
	208	8145194	B2	2012-03-27	Yoshikawa et al.	
	209	8146142	B2	2012-03-27	Lortz et al.	
	210	8149748	B2	2012-04-03	Bata et al.	
	211	8149823		2012-04-03	Turcan, Diane Brown et al.	
	212	8150394	B2	2012-04-03	Bianconi et al.	
	213	8150431		2012-04-03	Wolovitz, Lionel et al.	
	214	8151205	B2	2012-04-03	Follmann et al.	
	215	8155155		2012-04-10	Chow, Albert T. et al.	
	216	8155620		2012-04-10	Wang, Jun et al.	
	217	8155666	B2	2012-04-10	Alizadeh-Shabdiz, Farshid	

INFORMATION DISCLOSURE STATEMENT BY APPLICANT (Not for submission under 37 CFR 1.99)		
	Application Number	16907887
	Filing Date	2020-06-22
	First Named Inventor	RALEIGH, GREGORY
	Art Unit	2434
	Examiner Name	KAPLAN, BENJAMIN
	Attorney Docket Number	RALEP025C1C1C1C1

	218	8155670		2012-04-10	Fullam, Scott et al.	
	219	8156206		2012-04-10	KILEY, Kevin J. et al.	
	220	8159520	B1	2012-04-17	Dhanoa et al.	
	221	8160015		2012-04-17	RASHID, Mohammed H. et al.	
	222	8160056	B2	2012-04-17	Van der Merwe et al.	
	223	8160598	B2	2012-04-17	Savoor, Raghvendra	
	224	8165576		2012-04-24	Raju, Vishwanath et al.	
	225	8166040	B2	2012-04-24	Brindisi, Richard G. et al.	
	226	8166554	B2	2012-04-24	John, Pramod	
	227	8170553		2012-05-01	BENNETT, James D.	
	228	8174378	B2	2012-05-08	Richman et al.	

INFORMATION DISCLOSURE STATEMENT BY APPLICANT (Not for submission under 37 CFR 1.99)		
	Application Number	16907887
	Filing Date	2020-06-22
	First Named Inventor	RALEIGH, GREGORY
	Art Unit	2434
	Examiner Name	KAPLAN, BENJAMIN
	Attorney Docket Number	RALEP025C1C1C1C1

	229	8174970	B2	2012-05-12	Adamczyk, Maria et al.	
	230	8175574	B1	2012-05-08	Panda et al.	
	231	8180333	B1	2012-05-15	Wells et al.	
	232	8180881	B2	2012-05-15	Seo et al.	
	233	8180886	B2	2012-05-15	Overcash et al.	
	234	8184530		2012-05-22	SWAN, Tim L. et al.	
	235	8184590		2012-05-22	Rosenblatt, Ariel	
	236	8185088	B2	2012-05-22	Klein et al.	
	237	8185093		2012-05-22	Jheng, Yu-Syuan et al.	
	238	8185127	B1	2012-05-22	Cai et al.	
	239	8185152		2012-05-22	GOLDNER, Alla	

INFORMATION DISCLOSURE STATEMENT BY APPLICANT (Not for submission under 37 CFR 1.99)		
	Application Number	16907887
	Filing Date	2020-06-22
	First Named Inventor	RALEIGH, GREGORY
	Art Unit	2434
	Examiner Name	KAPLAN, BENJAMIN
	Attorney Docket Number	RALEP025C1C1C1C1

	240	8185158		2012-05-22	Tamura, Motoshi et al.	
	241	8190087	B2	2012-05-29	Fisher et al.	
	242	8190122	B1	2012-05-29	Alexander et al.	
	243	8190675		2012-05-29	TRIBBETT, David	
	244	8191106	B2	2012-05-29	Choyi et al.	
	245	8191116		2012-05-29	Gazzard, Daryl	
	246	8191124	B2	2012-05-29	Wynn et al.	
	247	8194549	B2	2012-06-05	Huber et al.	
	248	8194553		2012-06-05	LIANG, Zhi Yong et al.	
	249	8194572	B2	2012-06-05	Horvath et al.	
	250	8194581	B1	2012-06-05	Schroeder et al.	

INFORMATION DISCLOSURE STATEMENT BY APPLICANT (Not for submission under 37 CFR 1.99)		
	Application Number	16907887
	Filing Date	2020-06-22
	First Named Inventor	RALEIGH, GREGORY
	Art Unit	2434
	Examiner Name	KAPLAN, BENJAMIN
	Attorney Docket Number	RALEP025C1C1C1C1

	251	8195093	B2	2012-06-05	Garrett et al.	
	252	8195153	B1	2012-06-05	Frencel et al.	
	253	8195163	B2	2012-06-05	Gisby, Doug et al.	
	254	8195661	B2	2012-06-05	Kalavade, Asawaree	
	255	8196199	B2	2012-06-05	Hrastar et al.	
	256	8200163	B2	2012-06-12	Hoffman, George E.	
	257	8200200	B1	2012-06-12	Belser et al.	
	258	8200509	B2	2012-06-12	Kenedy, Andrew Alexander et al.	
	259	8200775		2012-06-12	MOORE, James F.	
	260	8200818	B2	2012-06-12	Freund et al.	
	261	8204190	B2	2012-06-19	Bang et al.	

INFORMATION DISCLOSURE STATEMENT BY APPLICANT (Not for submission under 37 CFR 1.99)		
	Application Number	16907887
	Filing Date	2020-06-22
	First Named Inventor	RALEIGH, GREGORY
	Art Unit	2434
	Examiner Name	KAPLAN, BENJAMIN
	Attorney Docket Number	RALEP025C1C1C1C1

	262	8204505	B2	2012-06-19	Jin et al.	
	263	8208788	B2	2012-06-26	Ando et al.	
	264	8208919		2012-06-26	KOTECHA, Lalit Ratilal	
	265	8213296		2012-07-03	SHANNON, Frank M. et al.	
	266	8213363		2012-07-03	Ying, Wen-Ping et al.	
	267	8214536		2012-07-03	ZHAO, Wen	
	268	8214890	B2	2012-07-03	Kirovski et al.	
	269	8219134	B2	2012-07-10	Maharajh et al.	
	270	8223655	B2	2012-07-17	Heinz et al.	
	271	8223741	B	2012-07-17	Bartlett et al.	
	272	8224382		2012-07-17	Bultman, Michael J.	

INFORMATION DISCLOSURE STATEMENT BY APPLICANT (Not for submission under 37 CFR 1.99)		
	Application Number	16907887
	Filing Date	2020-06-22
	First Named Inventor	RALEIGH, GREGORY
	Art Unit	2434
	Examiner Name	KAPLAN, BENJAMIN
	Attorney Docket Number	RALEP025C1C1C1C1

	273	8224773		2012-07-17	Spiegel, Joel R.	
	274	8228818	B2	2012-07-24	Chase et al.	
	275	8229394	B2	2012-07-24	Karlberg, Johan	
	276	8229914	B2	2012-07-24	Ramer et al.	
	277	8233433	B2	2012-07-31	Kalhan, Amit	
	278	8233883		2012-07-31	De Froment, Eric	
	279	8233895		2012-07-31	Tysowski, Piotr Konrad	
	280	8234583	B2	2012-07-31	Sloo et al.	
	281	8238287		2012-08-07	Gopi, Paramesh et al.	
	282	8238913	B1	2012-08-07	Bhattacharyya et al.	
	283	8239520		2012-08-07	GRAH, Adrian	

INFORMATION DISCLOSURE STATEMENT BY APPLICANT (Not for submission under 37 CFR 1.99)		
	Application Number	16907887
	Filing Date	2020-06-22
	First Named Inventor	RALEIGH, GREGORY
	Art Unit	2434
	Examiner Name	KAPLAN, BENJAMIN
	Attorney Docket Number	RALEP025C1C1C1C1

	284	8242959	B2	2012-08-14	Mia, Rashidus S. et al.	
	285	8244241		2012-08-14	Montemurro, Michael	
	286	8249601	B2	2012-08-21	Emberson et al.	
	287	8254880	B2	2012-08-28	Aaltonen et al.	
	288	8254915		2012-08-28	Kozisek, Steven E.	
	289	8255515		2012-08-28	MELMAN, David et al.	
	290	8255534	B2	2012-08-28	Assadzadeh, Alireza	
	291	8255689		2012-08-28	KIM, Eun Ah et al.	
	292	8259692	B2	2012-09-04	Bajko, Gabor	
	293	8260252	B2	2012-09-04	Agarwal	
	294	8264965	B2	2012-09-11	Dolganow et al.	

INFORMATION DISCLOSURE STATEMENT BY APPLICANT (Not for submission under 37 CFR 1.99)	Application Number	16907887
	Filing Date	2020-06-22
	First Named Inventor	RALEIGH, GREGORY
	Art Unit	2434
	Examiner Name	KAPLAN, BENJAMIN
	Attorney Docket Number	RALEP025C1C1C1C1

	295	8265004		2012-09-11	Toutonghi, Michael J.	
	296	8266249	B2	2012-09-11	Hu	
	297	8266681		2012-09-11	Deshpande, Sumit B. et al.	
	298	8270955	B2	2012-09-18	Ramer et al.	
	299	8270972	B2	2012-09-18	Otting, Marcia J. et al.	
	300	8271025	B2	2012-09-18	Brisebois et al.	

If you wish to add additional U.S. Patent citation information please click the Add button. Add

U.S.PATENT APPLICATION PUBLICATIONS Remove

Examiner Initial*	Cite No	Publication Number	Kind Code[1]	Publication Date	Name of Patentee or Applicant of cited Document	Pages,Columns,Lines where Relevant Passages or Relevant Figures Appear
	1					

If you wish to add additional U.S. Published Application citation information please click the Add button. Add

FOREIGN PATENT DOCUMENTS Remove

Examiner Initial*	Cite No	Foreign Document Number[3]	Country Code[2]	Kind Code[4]	Publication Date	Name of Patentee or Applicant of cited Document	Pages,Columns,Lines where Relevant Passages or Relevant Figures Appear	T[5]

EFS Web 2.1.18

INFORMATION DISCLOSURE STATEMENT BY APPLICANT (Not for submission under 37 CFR 1.99)	Application Number	16907887
	Filing Date	2020-06-22
	First Named Inventor	RALEIGH, GREGORY
	Art Unit	2434
	Examiner Name	KAPLAN, BENJAMIN
	Attorney Docket Number	RALEP025C1C1C1C1

	1							

If you wish to add additional Foreign Patent Document citation information please click the Add button Add

NON-PATENT LITERATURE DOCUMENTS Remove

Examiner Initials*	Cite No	Include name of the author (in CAPITAL LETTERS), title of the article (when appropriate), title of the item (book, magazine, journal, serial, symposium, catalog, etc), date, pages(s), volume-issue number(s), publisher, city and/or country where published.	T[5]
	1		

If you wish to add additional non-patent literature document citation information please click the Add button Add

EXAMINER SIGNATURE

Examiner Signature		Date Considered	

*EXAMINER: Initial if reference considered, whether or not citation is in conformance with MPEP 609. Draw line through a citation if not in conformance and not considered. Include copy of this form with next communication to applicant.

[1] See Kind Codes of USPTO Patent Documents at www.USPTO.GOV or MPEP 901.04. [2] Enter office that issued the document, by the two-letter code (WIPO Standard ST.3). [3] For Japanese patent documents, the indication of the year of the reign of the Emperor must precede the serial number of the patent document. [4] Kind of document by the appropriate symbols as indicated on the document under WIPO Standard ST.16 if possible. [5] Applicant is to place a check mark here if English language translation is attached.

INFORMATION DISCLOSURE STATEMENT BY APPLICANT (Not for submission under 37 CFR 1.99)	Application Number	16907887
	Filing Date	2020-06-22
	First Named Inventor	RALEIGH, GREGORY
	Art Unit	2434
	Examiner Name	KAPLAN, BENJAMIN
	Attorney Docket Number	RALEP025C1C1C1C1

CERTIFICATION STATEMENT

Please see 37 CFR 1.97 and 1.98 to make the appropriate selection(s):

That each item of information contained in the information disclosure statement was first cited in any communication from a foreign patent office in a counterpart foreign application not more than three months prior to the filing of the information disclosure statement. See 37 CFR 1.97(e)(1).

OR

☐ That no item of information contained in the information disclosure statement was cited in a communication from a foreign patent office in a counterpart foreign application, and, to the knowledge of the person signing the certification after making reasonable inquiry, no item of information contained in the information disclosure statement was known to any individual designated in 37 CFR 1.56(c) more than three months prior to the filing of the information disclosure statement. See 37 CFR 1.97(e)(2).

See attached certification statement.

The fee set forth in 37 CFR 1.17 (p) has been submitted herewith.

☒ A certification statement is not submitted herewith.

SIGNATURE

A signature of the applicant or representative is required in accordance with CFR 1.33, 10.18. Please see CFR 1.4(d) for the form of the signature.

Signature	/James E. Harris/	Date (YYYY-MM-DD)	2021-02-03
Name/Print	James E. Harris	Registration Number	40013

This collection of information is required by 37 CFR 1.97 and 1.98. The information is required to obtain or retain a benefit by the public which is to file (and by the USPTO to process) an application. Confidentiality is governed by 35 U.S.C. 122 and 37 CFR 1.14. This collection is estimated to take 1 hour to complete, including gathering, preparing and submitting the completed application form to the USPTO. Time will vary depending upon the individual case. Any comments on the amount of time you require to complete this form and/or suggestions for reducing this burden, should be sent to the Chief Information Officer, U.S. Patent and Trademark Office, U.S. Department of Commerce, P.O. Box 1450, Alexandria, VA 22313-1450. DO NOT SEND FEES OR COMPLETED FORMS TO THIS ADDRESS. **SEND TO: Commissioner for Patents, P.O. Box 1450, Alexandria, VA 22313-1450.**

Privacy Act Statement

The Privacy Act of 1974 (P.L. 93-579) requires that you be given certain information in connection with your submission of the attached form related to a patent application or patent. Accordingly, pursuant to the requirements of the Act, please be advised that: (1) the general authority for the collection of this information is 35 U.S.C. 2(b)(2); (2) furnishing of the information solicited is voluntary; and (3) the principal purpose for which the information is used by the U.S. Patent and Trademark Office is to process and/or examine your submission related to a patent application or patent. If you do not furnish the requested information, the U.S. Patent and Trademark Office may not be able to process and/or examine your submission, which may result in termination of proceedings or abandonment of the application or expiration of the patent.

The information provided by you in this form will be subject to the following routine uses:

1. The information on this form will be treated confidentially to the extent allowed under the Freedom of Information Act (5 U.S.C. 552) and the Privacy Act (5 U.S.C. 552a). Records from this system of records may be disclosed to the Department of Justice to determine whether the Freedom of Information Act requires disclosure of these record s.

2. A record from this system of records may be disclosed, as a routine use, in the course of presenting evidence to a court, magistrate, or administrative tribunal, including disclosures to opposing counsel in the course of settlement negotiations.

3. A record in this system of records may be disclosed, as a routine use, to a Member of Congress submitting a request involving an individual, to whom the record pertains, when the individual has requested assistance from the Member with respect to the subject matter of the record.

4. A record in this system of records may be disclosed, as a routine use, to a contractor of the Agency having need for the information in order to perform a contract. Recipients of information shall be required to comply with the requirements of the Privacy Act of 1974, as amended, pursuant to 5 U.S.C. 552a(m).

5. A record related to an International Application filed under the Patent Cooperation Treaty in this system of records may be disclosed, as a routine use, to the International Bureau of the World Intellectual Property Organization, pursuant to the Patent Cooperation Treaty.

6. A record in this system of records may be disclosed, as a routine use, to another federal agency for purposes of National Security review (35 U.S.C. 181) and for review pursuant to the Atomic Energy Act (42 U.S.C. 218(c)).

7. A record from this system of records may be disclosed, as a routine use, to the Administrator, General Services, or his/her designee, during an inspection of records conducted by GSA as part of that agency's responsibility to recommend improvements in records management practices and programs, under authority of 44 U.S.C. 2904 and 2906. Such disclosure shall be made in accordance with the GSA regulations governing inspection of records for this purpose, and any other relevant (i.e., GSA or Commerce) directive. Such disclosure shall not be used to make determinations about individuals.

8. A record from this system of records may be disclosed, as a routine use, to the public after either publication of the application pursuant to 35 U.S.C. 122(b) or issuance of a patent pursuant to 35 U.S.C. 151. Further, a record may be disclosed, subject to the limitations of 37 CFR 1.14, as a routine use, to the public if the record was filed in an application which became abandoned or in which the proceedings were terminated and which application is referenced by either a published application, an application open to public inspections or an issued patent.

9. A record from this system of records may be disclosed, as a routine use, to a Federal, State, or local law enforcement agency, if the USPTO becomes aware of a violation or potential violation of law or regulation.

PTO/SB/08a (02-18)
Approved for use through 11/30/2020. OMB 0651-0031
U.S. Patent and Trademark Office; U.S. DEPARTMENT OF COMMERCE
Under the Paperwork Reduction Act of 1995, no persons are required to respond to a collection of information unless it contains a valid OMB control number.

INFORMATION DISCLOSURE STATEMENT BY APPLICANT

(Not for submission under 37 CFR 1.99)

Application Number	16907887
Filing Date	2020-06-22
First Named Inventor	RALEIGH, GREGORY
Art Unit	2434
Examiner Name	KAPLAN, BENJAMIN
Attorney Docket Number	RALEP025C1C1C1C1

U.S.PATENTS Remove

Examiner Initial*	Cite No	Patent Number	Kind Code[1]	Issue Date	Name of Patentee or Applicant of cited Document	Pages,Columns,Lines where Relevant Passages or Relevant Figures Appear
	1	6829596		2004-12-07	FRAZEE, Steve	
	2	6829696		2004-12-07	BALMER et al.	
	3	6839340		2005-01-04	Voit, Eric A. et al.	
	4	6842628	B1	2005-01-11	Arnold et al.	
	5	6873988	B2	2005-03-29	Herrmann et al.	
	6	6876653		2005-04-05	AMBE, Shekhar et al.	
	7	6879825	B1	2005-04-12	Daly, Brian Kevin	
	8	6882718	B1	2005-04-19	Smith, Benjamin V.	

INFORMATION DISCLOSURE STATEMENT BY APPLICANT (Not for submission under 37 CFR 1.99)		
	Application Number	16907887
	Filing Date	2020-06-22
	First Named Inventor	RALEIGH, GREGORY
	Art Unit	2434
	Examiner Name	KAPLAN, BENJAMIN
	Attorney Docket Number	RALEP025C1C1C1C1

	9	6885997	B1	2005-04-26	Roberts, David T.	
	10	6901440	B1	2005-05-31	Bimm et al.	
	11	6920455		2005-07-19	WESCHLER, Paul	
	12	6922562		2005-07-26	Ward, Stephen L. et al.	
	13	6928280		2005-08-09	Xanthos, James et al.	
	14	6934249	B1	2005-08-23	Bertin, Olivier et al.	
	15	6934751	B2	2005-08-23	Jayapalan et al.	
	16	6947723		2005-09-20	Gurnani, Roger et al.	
	17	6947985	B2	2005-09-20	Hegli et al.	
	18	6952428		2005-10-04	NECKA et al.	
	19	6957067		2005-10-18	Iyer, Pradeep J. et al.	

INFORMATION DISCLOSURE STATEMENT BY APPLICANT (Not for submission under 37 CFR 1.99)		
	Application Number	16907887
	Filing Date	2020-06-22
	First Named Inventor	RALEIGH, GREGORY
	Art Unit	2434
	Examiner Name	KAPLAN, BENJAMIN
	Attorney Docket Number	RALEP025C1C1C1C1

	20	6959202	B2	2005-10-25	Heinonen et al.	
	21	6959393	B2	2005-10-25	Hollis et al.	
	22	6965667		2005-11-15	TRABANDT et al.	
	23	6965872		2005-11-15	Grdina, Jerome M.	
	24	6967958		2005-11-22	ONO, Yoshiyuki et al.	
	25	6970692	B2	2005-11-29	Tysor, Arthur James	
	26	6970927	B1	2005-11-29	Stewart et al.	
	27	6982733	B1	2006-01-03	McNally et al.	
	28	6983370	B2	2006-01-03	Eaton et al.	
	29	6996062	B1	2006-02-07	Freed et al.	
	30	6996076		2006-02-07	FORBES et al.	

INFORMATION DISCLOSURE STATEMENT BY APPLICANT (Not for submission under 37 CFR 1.99)		
	Application Number	16907887
	Filing Date	2020-06-22
	First Named Inventor	RALEIGH, GREGORY
	Art Unit	2434
	Examiner Name	KAPLAN, BENJAMIN
	Attorney Docket Number	RALEP025C1C1C1C1

	31	6996393		2006-02-07	Pyhalammi, Seppo et al.	
	32	6998985		2006-02-14	REISMAN et al.	
	33	7002920		2006-02-21	Ayyagari, Deepak et al.	
	34	7007295	B1	2006-02-28	Rose et al.	
	35	7013469	B2	2006-03-14	Smith et al.	
	36	7017189	B1	2006-03-21	DeMello et al.	
	37	7024200		2006-04-04	McKENNA et al.	
	38	7024460	B2	2006-04-04	Koopmas et al.	
	39	7027055	B2	2006-04-11	Anderson et al.	
	40	7027408		2006-04-11	NABKEL et al.	
	41	7031733	B2	2006-04-18	Alminana et al.	

INFORMATION DISCLOSURE STATEMENT BY APPLICANT (Not for submission under 37 CFR 1.99)		
	Application Number	16907887
	Filing Date	2020-06-22
	First Named Inventor	RALEIGH, GREGORY
	Art Unit	2434
	Examiner Name	KAPLAN, BENJAMIN
	Attorney Docket Number	RALEP025C1C1C1C1

	42	7032072	B1	2006-04-18	Quinn et al.	
	43	7039027	B2	2006-05-02	Bridgelall, Raj	
	44	7039037		2006-05-02	Wang, Jiwei R. et al.	
	45	7039403		2006-05-02	Wong, Gregory A.	
	46	7039713	B1	2006-05-02	Van Gunter, David et al.	
	47	7042988		2006-05-09	JUITT et al.	
	48	7043225	B1	2006-05-09	Patel et al.	
	49	7043226		2006-05-09	Yamauchi, Toshiaki	
	50	7043268	B2	2006-05-09	Yukie et al.	
	51	7047276	B2	2006-05-16	Liu et al.	
	52	7058022	B1	2006-06-06	Carolan et al.	

INFORMATION DISCLOSURE STATEMENT BY APPLICANT (Not for submission under 37 CFR 1.99)		
	Application Number	16907887
	Filing Date	2020-06-22
	First Named Inventor	RALEIGH, GREGORY
	Art Unit	2434
	Examiner Name	KAPLAN, BENJAMIN
	Attorney Docket Number	RALEP025C1C1C1C1

	53	7058968		2006-06-06	ROWLAND et al.	
	54	7068600		2006-06-27	CAIN, Joseph Bibb	
	55	7069248		2006-06-27	HUBER, Adriano	
	56	7082422	B1	2006-07-25	Zirngibl et al.	
	57	7084775	B1	2006-08-01	Smith, Michael R.	
	58	7092696		2006-08-15	HOSAIN et al.	
	59	7095754	B2	2006-08-22	Benveniste, Mathilde	
	60	7102620	B2	2006-09-05	Harries, Andrew Stanely Guy et al.	
	61	7110753	B2	2006-09-19	Campen, Kenneth Brian	
	62	7113780	B2	2006-09-26	Mckenna Daniel et al.	
	63	7113997		2012-09-26	Jayapalan, Jay et al.	

INFORMATION DISCLOSURE STATEMENT BY APPLICANT (Not for submission under 37 CFR 1.99)	Application Number	16907887
	Filing Date	2020-06-22
	First Named Inventor	RALEIGH, GREGORY
	Art Unit	2434
	Examiner Name	KAPLAN, BENJAMIN
	Attorney Docket Number	RALEP025C1C1C1C1

	64	7120133	B1	2006-10-10	Joo et al.	
	65	7133386	B2	2006-11-07	Holur et al.	
	66	7133695	B2	2006-11-07	Beyda, William J.	
	67	7136361	B2	2006-11-14	Benveniste, Mathilde	
	68	7139569	B2	2006-11-21	Kato, Akira	
	69	7142876		2006-11-28	TROSSEN et al.	
	70	7149229	B1	2006-12-12	Leung, Kent K.	
	71	7149521	B2	2006-12-12	Sundar et al.	
	72	7151764	B1	2006-12-19	Heinonen et al.	
	73	7158792		2007-01-02	COOK et al.	
	74	7162237	B1	2007-01-09	Silver et al.	

INFORMATION DISCLOSURE STATEMENT BY APPLICANT (Not for submission under 37 CFR 1.99)		
	Application Number	16907887
	Filing Date	2020-06-22
	First Named Inventor	RALEIGH, GREGORY
	Art Unit	2434
	Examiner Name	KAPLAN, BENJAMIN
	Attorney Docket Number	RALEP025C1C1C1C1

	75	7165040	B2	2007-01-16	Ehrman et al.	
	76	7167078		2007-01-23	POURCHOT, Shawn C.	
	77	7174156	B1	2007-02-06	Mangal, Manish	
	78	7174174		2007-02-06	BORIS et al.	
	79	7177919	B1	2007-02-13	Truong et al.	
	80	7180855		2007-02-20	LIN , Wei	
	81	7181017		2007-02-20	Nagel, Robert H. et al.	
	82	7191248	B2	2007-03-13	Chattopadhyay et al.	
	83	7197321		2007-03-27	ERSKINE et al.	
	84	7200112	B2	2007-04-03	Sundar et al.	
	85	7200551	B1	2007-04-03	Senez	

INFORMATION DISCLOSURE STATEMENT BY APPLICANT (Not for submission under 37 CFR 1.99)		
	Application Number	16907887
	Filing Date	2020-06-22
	First Named Inventor	RALEIGH, GREGORY
	Art Unit	2434
	Examiner Name	KAPLAN, BENJAMIN
	Attorney Docket Number	RALEP025C1C1C1C1

	86	7203169	B1	2007-04-10	Okholm, Jon et al.	
	87	7203721	B1	2007-04-10	Ben-Efraim et al.	
	88	7203752	B2	2007-04-10	Rice et al.	
	89	7212491		2007-05-01	Koga, Takahiro	
	90	7219123	B1	2007-05-15	Fiechter et al.	
	91	7222190	B2	2007-05-22	Klinker et al.	
	92	7222304	B2	2007-05-22	Beaton et al.	
	93	7224968	B2	2007-05-29	Dobson et al.	
	94	7228354		2007-06-05	CHAMBLISS, David Darden et al.	
	95	7236780		2007-06-26	Benco, David S.	
	96	7242668	B2	2007-07-10	Kan et al.	

INFORMATION DISCLOSURE STATEMENT BY APPLICANT (Not for submission under 37 CFR 1.99)		
	Application Number	16907887
	Filing Date	2020-06-22
	First Named Inventor	RALEIGH, GREGORY
	Art Unit	2434
	Examiner Name	KAPLAN, BENJAMIN
	Attorney Docket Number	RALEP025C1C1C1C1

	97	7242920		2007-07-10	MORRIS, Robert P.	
	98	7245901		2007-07-17	McGREGOR et al.	
	99	7248570	B2	2007-07-24	Bahl et al.	
	100	7251218		2007-07-31	Jorgensen, Jacob W.	
	101	7260382	B1	2007-08-21	Lamb et al.	
	102	7266371	B1	2007-09-04	Amin et al.	
	103	7269157	B2	2007-09-11	Klinker et al.	
	104	7271765	B2	2007-09-18	Stilp et al.	
	105	7272660	B1	2007-09-18	Powers et al.	
	106	7280816		2007-10-09	FRATTI et al.	
	107	7280818		2007-10-09	CLAYTON, Steve	

INFORMATION DISCLOSURE STATEMENT BY APPLICANT (Not for submission under 37 CFR 1.99)		
	Application Number	16907887
	Filing Date	2020-06-22
	First Named Inventor	RALEIGH, GREGORY
	Art Unit	2434
	Examiner Name	KAPLAN, BENJAMIN
	Attorney Docket Number	RALEP025C1C1C1C1

	108	7283561		2007-10-16	Picher-Dempsey, Heidi	
	109	7283963		2007-10-16	FITZPATRICK, John E. et al.	
	110	7286834	B2	2007-10-23	Walter	
	111	7286848	B2	2007-10-23	Vireday, Richard P. et al.	
	112	7289489		2007-10-30	KUNG et al.	
	113	7290283		2007-10-30	COPELAND III, John A.	
	114	7310424		2007-12-18	Gehring, Stephan Walter et al.	
	115	7313237	B2	2007-12-25	Bahl, Paramvir et al.	
	116	7315892	B2	2008-01-01	Freimuth et al.	
	117	7317699		2008-01-08	GODFREY et al.	
	118	7318111	B2	2008-01-08	Zhao, Wen	

INFORMATION DISCLOSURE STATEMENT BY APPLICANT (Not for submission under 37 CFR 1.99)		
	Application Number	16907887
	Filing Date	2020-06-22
	First Named Inventor	RALEIGH, GREGORY
	Art Unit	2434
	Examiner Name	KAPLAN, BENJAMIN
	Attorney Docket Number	RALEP025C1C1C1C1

	119	7320029	B2	2008-01-15	Rinne et al.	
	120	7322044		2008-01-22	HRASTAR, Scott E.	
	121	7324447		2008-01-29	MORFORD, Michael Robert	
	122	7325037		2008-01-29	LAWSON, Karen L.	
	123	7336960		2008-02-26	ZAVALKOVSKY et al.	
	124	7340772	B2	2008-03-04	Panasyuk et al.	
	125	7346410		2008-03-18	UCHIYAMA, Kenji	
	126	7349695		2008-03-25	OOMMEN et al.	
	127	7353533	B2	2008-04-01	Wright et al.	
	128	7356011		2008-04-08	Waters, Christopher J.F. et al.	
	129	7356337		2008-04-08	FLORENCE, Shahar	

INFORMATION DISCLOSURE STATEMENT BY APPLICANT (Not for submission under 37 CFR 1.99)		
	Application Number	16907887
	Filing Date	2020-06-22
	First Named Inventor	RALEIGH, GREGORY
	Art Unit	2434
	Examiner Name	KAPLAN, BENJAMIN
	Attorney Docket Number	RALEP025C1C1C1C1

	130	7366497		2008-04-29	NAGATA, Hideaki	
	131	7366654	B2	2008-04-29	Moore, Robert C.	
	132	7366934	B1	2008-04-29	Narayan et al.	
	133	7369848	B2	2008-05-06	Jiang, Yue Jun	
	134	7369856	B2	2008-05-06	Ovadia, Shlomo	
	135	7373136		2008-05-13	WATLER et al.	
	136	7373179		2008-05-13	Stine, Ted et al.	
	137	7379731	B2	2008-05-27	Natsuno et al.	
	138	7388950		2008-06-17	ELSEY et al.	
	139	7389412	B2	2008-06-17	Sharma et al.	
	140	7391724	B2	2008-06-24	Alakoski et al.	

INFORMATION DISCLOSURE STATEMENT BY APPLICANT (Not for submission under 37 CFR 1.99)		
	Application Number	16907887
	Filing Date	2020-06-22
	First Named Inventor	RALEIGH, GREGORY
	Art Unit	2434
	Examiner Name	KAPLAN, BENJAMIN
	Attorney Docket Number	RALEP025C1C1C1C1

	141	7395056	B2	2008-07-01	Petermann	
	142	7395244	B1	2008-07-01	Kingsford, Bryan	
	143	7401338		2008-07-15	BOWEN et al.	
	144	7403763		2008-07-22	MAES, Stephane H.	
	145	7409447	B	2008-08-05	Assadzadeh, Alireza	
	146	7409569	B2	2008-08-05	Illowsky et al.	
	147	7411930	B2	2008-08-12	Montojo et al.	
	148	7418253		2008-08-26	KAVANAH, Alan	
	149	7418257		2008-08-26	Kim, Myong-Ju	
	150	7421004		2008-09-02	FEHER, Kamilo	
	151	7423971	B1	2008-09-09	Mohaban et al.	

INFORMATION DISCLOSURE STATEMENT BY APPLICANT (Not for submission under 37 CFR 1.99)		
	Application Number	16907887
	Filing Date	2020-06-22
	First Named Inventor	RALEIGH, GREGORY
	Art Unit	2434
	Examiner Name	KAPLAN, BENJAMIN
	Attorney Docket Number	RALEP025C1C1C1C1

	152	7428750	B1	2008-09-23	Dunn et al.	
	153	7433362	B2	2008-10-07	Mallya et al.	
	154	7436816	B2	2008-10-14	Mehta et al.	
	155	7440433	B2	2008-10-21	Rink et al.	
	156	7444669	B1	2008-10-28	Bahl, Paramvir et al.	
	157	7450591		2008-11-11	KORLING et al.	
	158	7450927		2008-11-11	CRESWELL et al.	
	159	7454191	B2	2008-11-18	Dawson et al.	
	160	7457265		2008-11-25	Julka, Vibhor et al.	
	161	7457870	B1	2008-11-25	Lownsbrough et al.	
	162	7460837	B2	2008-12-02	Diener, Neil R.	

INFORMATION DISCLOSURE STATEMENT BY APPLICANT (Not for submission under 37 CFR 1.99)		
	Application Number	16907887
	Filing Date	2020-06-22
	First Named Inventor	RALEIGH, GREGORY
	Art Unit	2434
	Examiner Name	KAPLAN, BENJAMIN
	Attorney Docket Number	RALEP025C1C1C1C1

	163	7466652	B2	2008-12-16	Lau et al.	
	164	7467160	B2	2008-12-16	McIntyre	
	165	7472189		2008-12-30	Mallya, Arvind R. et al.	
	166	7478420	B2	2009-01-13	Wright, Michael et al.	
	167	7486185		2009-02-03	CULPEPPER et al.	
	168	7486658	B2	2009-02-03	Kumar, Rajneesh	
	169	7493659	B1	2009-02-17	Wu, Handong et al.	
	170	7496652		2009-02-24	Pezzutti, David	
	171	7499438		2009-03-03	Hinman, Brian L. et al.	
	172	7499537		2009-03-03	ELSEY et al.	
	173	7502672	B1	2009-03-10	Kolls, H. Brock	

INFORMATION DISCLOSURE STATEMENT BY APPLICANT (Not for submission under 37 CFR 1.99)	Application Number	16907887
	Filing Date	2020-06-22
	First Named Inventor	RALEIGH, GREGORY
	Art Unit	2434
	Examiner Name	KAPLAN, BENJAMIN
	Attorney Docket Number	RALEP025C1C1C1C1

	174	7505756	B2	2009-03-17	Bahl	
	175	7505795	B1	2009-03-17	Lim et al.	
	176	7508799	B2	2009-03-24	Sumner et al.	
	177	7512128	B2	2009-03-31	DiMambro et al.	
	178	7512131	B2	2009-03-31	Svensson et al.	
	179	7515608		2009-04-07	Yuan, Yuan et al.	
	180	7515926	B2	2009-04-07	Bu et al.	
	181	7516219		2009-04-07	MOGHADDAM et al.	
	182	7522549	B2	2009-04-21	Karaoguz et al.	
	183	7522576	B2	2009-04-21	Du et al.	
	184	7526541	B2	2009-04-28	Roese et al.	

INFORMATION DISCLOSURE STATEMENT BY APPLICANT (Not for submission under 37 CFR 1.99)		
	Application Number	16907887
	Filing Date	2020-06-22
	First Named Inventor	RALEIGH, GREGORY
	Art Unit	2434
	Examiner Name	KAPLAN, BENJAMIN
	Attorney Docket Number	RALEP025C1C1C1C1

	185	7529204	B2	2009-05-05	Bourlas, Yair et al.	
	186	7535880		2009-05-19	Hinman, Brian L. et al.	
	187	7536695	B2	2009-05-19	Alam et al.	
	188	7539132	B2	2009-05-26	Werner et al.	
	189	7539862	B2	2009-05-26	Edgett et al.	
	190	7540408	B2	2009-06-02	Levine et al.	
	191	7545782		2009-06-09	Rayment, Stephen G. et al.	
	192	7546460		2009-06-09	Maes, Stephane H.	
	193	7546629		2009-06-09	ALBERT, Anthony et al.	
	194	7548875	B2	2009-06-16	Mikkelsen et al.	
	195	7548976	B2	2009-06-16	Bahl, Paramvir et al.	

INFORMATION DISCLOSURE STATEMENT BY APPLICANT (Not for submission under 37 CFR 1.99)		
	Application Number	16907887
	Filing Date	2020-06-22
	First Named Inventor	RALEIGH, GREGORY
	Art Unit	2434
	Examiner Name	KAPLAN, BENJAMIN
	Attorney Docket Number	RALEP025C1C1C1C1

	196	7551921	B2	2009-06-23	Petermann	
	197	7551922		2009-06-23	Roskowski, Steve et al.	
	198	7554983	B1	2009-06-30	Muppala, Suresh	
	199	7555757	B2	2009-06-30	Smith et al.	
	200	7561899	B2	2009-07-14	Lee, Changseok	
	201	7562213	B1	2009-07-14	Timms, Natalie	
	202	7564799	B2	2009-07-21	Holland et al.	
	203	7565141		2009-07-21	Macaluso, Anthony G.	
	204	7574509	B2	2009-08-11	Nixon et al.	
	205	7574731		2009-08-11	FASCENDA, Anthony C.	
	206	7577431	B2	2009-08-18	Jiang, Yue Jun	

INFORMATION DISCLOSURE STATEMENT BY APPLICANT (Not for submission under 37 CFR 1.99)		
	Application Number	16907887
	Filing Date	2020-06-22
	First Named Inventor	RALEIGH, GREGORY
	Art Unit	2434
	Examiner Name	KAPLAN, BENJAMIN
	Attorney Docket Number	RALEP025C1C1C1C1

	207	7580356	B1	2009-08-25	Mishra et al.	
	208	7580857		2009-08-25	VanFLEET et al.	
	209	7583964	B2	2009-09-01	Wong, Gregory A.	
	210	7584298	B2	2009-09-01	Klinker et al.	
	211	7585217	B2	2009-09-08	Lutnick et al.	
	212	7586871	B2	2009-09-08	Hamilton et al.	
	213	7593417		2009-09-22	Wang, James et al.	
	214	7593730	B2	2009-09-22	Khandelwal, Deepak et al.	
	215	7596373	B2	2009-09-29	Mcgregor, Christopher et al.	
	216	7599288		2009-10-06	COLE, Raymond E. et al.	
	217	7599714	B2	2009-10-06	Kuzminskiy, Alexandr	

INFORMATION DISCLOSURE STATEMENT BY APPLICANT (Not for submission under 37 CFR 1.99)		
	Application Number	16907887
	Filing Date	2020-06-22
	First Named Inventor	RALEIGH, GREGORY
	Art Unit	2434
	Examiner Name	KAPLAN, BENJAMIN
	Attorney Docket Number	RALEP025C1C1C1C1

	218	7602746	B2	2009-10-13	Calhoun et al.	
	219	7606918	B2	2009-10-20	Holzman et al.	
	220	7607041	B2	2009-10-20	Kraemer et al.	
	221	7609650		2009-10-27	ROSKOWSKI, Steve et al.	
	222	7609700		2009-10-27	Ying, Wen-Ping et al.	
	223	7610047	B2	2009-10-27	Hicks III et al.	
	224	7610057	B2	2009-10-27	Bahl et al.	
	225	7610328		2009-10-27	HAASE et al.	
	226	7610396	B2	2009-10-27	Taglienti et al.	
	227	7614051	B	2009-11-03	Glaum et al.	
	228	7616962	B2	2009-11-10	Oswal, Anand K. et al.	

INFORMATION DISCLOSURE STATEMENT BY APPLICANT (Not for submission under 37 CFR 1.99)		
	Application Number	16907887
	Filing Date	2020-06-22
	First Named Inventor	RALEIGH, GREGORY
	Art Unit	2434
	Examiner Name	KAPLAN, BENJAMIN
	Attorney Docket Number	RALEP025C1C1C1C1

	229	7617516		2009-11-10	HUSLAK et al.	
	230	7620041		2009-11-17	Dunn, Jeffrey H. et al.	
	231	7620065		2009-11-17	FALARDEAU, Eric	
	232	7620162		2009-11-17	AARON et al.	
	233	7620383	B2	2009-11-17	Taglienti et al.	
	234	7627314		2009-12-01	Carlson, Steven I. et al.	
	235	7627600	B2	2009-12-01	Citron et al.	
	236	7627767	B2	2009-12-01	Sherman et al.	
	237	7627872	B2	2009-12-01	Hebeler et al.	
	238	7633438		2009-12-15	Tysowski, Piotr Konrad	
	239	7634388		2009-12-15	Archer, Charles J. et al.	Entire Document

INFORMATION DISCLOSURE STATEMENT BY APPLICANT (Not for submission under 37 CFR 1.99)		
	Application Number	16907887
	Filing Date	2020-06-22
	First Named Inventor	RALEIGH, GREGORY
	Art Unit	2434
	Examiner Name	KAPLAN, BENJAMIN
	Attorney Docket Number	RALEP025C1C1C1C1

	240	7636574		2009-12-22	Poosala, Viswanath	
	241	7636626	B2	2009-12-22	Oesterling et al.	
	242	7643411	B2	2010-01-05	Andreasen et al.	
	243	7644151		2010-01-05	JERRIM, John et al.	
	244	7644267		2010-01-05	YLIKOSKI, Martti et al.	
	245	7644414	B2	2010-01-05	Smith et al.	
	246	7647047		2010-01-12	MOGHADDAM et al.	
	247	7650137		2010-01-19	JOBS et al.	
	248	7653394	B2	2010-01-26	McMillin, Brian K.	
	249	7656271	B2	2010-02-02	Ehrman et al.	
	250	7657920	B2	2010-02-02	Arseneau et al.	

INFORMATION DISCLOSURE STATEMENT BY APPLICANT (Not for submission under 37 CFR 1.99)		
	Application Number	16907887
	Filing Date	2020-06-22
	First Named Inventor	RALEIGH, GREGORY
	Art Unit	2434
	Examiner Name	KAPLAN, BENJAMIN
	Attorney Docket Number	RALEP025C1C1C1C1

	251	7660419	B1	2010-02-09	Ho, Jin-Meng	
	252	7661124	B2	2010-02-09	Ramanathan et al.	
	253	7664494	B2	2010-02-16	Jiang, Yue Jun	
	254	7668176		2010-02-23	Chuah, Mooi Choo	
	255	7668612	B	2010-02-23	Okkonen, Harri	
	256	7668903		2010-02-23	EDWARDS et al.	
	257	7668966	B2	2010-02-23	Klinker et al.	
	258	7676673	B2	2010-03-09	Weller et al.	
	259	7680086	B2	2010-03-16	Eglin	
	260	7681226	B2	2010-03-16	Kraemer et al.	
	261	7684370	B2	2010-03-23	Kezys, Vytautas Robertas	

INFORMATION DISCLOSURE STATEMENT BY APPLICANT (Not for submission under 37 CFR 1.99)		
	Application Number	16907887
	Filing Date	2020-06-22
	First Named Inventor	RALEIGH, GREGORY
	Art Unit	2434
	Examiner Name	KAPLAN, BENJAMIN
	Attorney Docket Number	RALEP025C1C1C1C1

	262	7685131		2010-03-23	Batra, Vishal Singh et al.	
	263	7685254		2010-03-23	Pandya, Ashish A.	
	264	7685530	B2	2010-03-23	Sherrard et al.	
	265	7688792	B2	2010-03-30	Babbar et al.	
	266	7693107	B2	2010-04-06	De Froment, Eric	
	267	7693720		2010-04-06	KENNEWICK et al.	
	268	7697540	B2	2010-04-13	Haddad et al.	
	269	7710932		2010-05-04	MUTHUSWAMY, Sivakumar et al.	
	270	7711848		2010-05-04	MAES, Stephane H.	
	271	7719966	B2	2010-05-18	Luft et al.	
	272	7720206	B2	2010-05-18	Devolites et al.	

INFORMATION DISCLOSURE STATEMENT BY APPLICANT (Not for submission under 37 CFR 1.99)		
	Application Number	16907887
	Filing Date	2020-06-22
	First Named Inventor	RALEIGH, GREGORY
	Art Unit	2434
	Examiner Name	KAPLAN, BENJAMIN
	Attorney Docket Number	RALEP025C1C1C1C1

	273	7720464	B2	2010-05-18	Batta, Puneet	
	274	7720505		2010-05-18	GOPI et al.	
	275	7720960	B2	2010-05-18	Pruss, Richard Manfred et al.	
	276	7721296	B2	2010-05-18	Ricagni, Giuseppe	
	277	7724716	B2	2010-05-25	Fadell, Anthony M.	
	278	7725570		2010-05-25	Lewis, Lundy	
	279	7729326		2010-06-01	Sekhar, Ramesh	
	280	7730123		2010-06-01	ERICKSON, Richard R. et al.	
	281	7734784		2010-06-08	ARAUJO et al.	
	282	7742406	B1	2010-06-22	Muppala, Suresh	
	283	7746854		2010-06-29	AMBE, Shekhar et al.	

INFORMATION DISCLOSURE STATEMENT BY APPLICANT (Not for submission under 37 CFR 1.99)		
	Application Number	16907887
	Filing Date	2020-06-22
	First Named Inventor	RALEIGH, GREGORY
	Art Unit	2434
	Examiner Name	KAPLAN, BENJAMIN
	Attorney Docket Number	RALEP025C1C1C1C1

	284	7747240		2010-06-29	BRISCOE et al.	
	285	7747699		2010-06-29	PRUEITT et al.	
	286	7747730		2010-06-29	HARLOW, James D.	
	287	7752330	B2	2010-07-06	Olsen et al.	
	288	7756056	B2	2010-07-13	Kim et al.	
	289	7756534		2010-07-13	Anupam, Vinod et al.	
	290	7756757	B1	2010-07-13	Oakes III, Charles Lee	
	291	7760137	B2	2010-07-20	Martucci et al.	
	292	7760711	B1	2010-07-20	Kung et al.	
	293	7760861		2010-07-20	Croak, Marian et al.	
	294	7765294	B2	2010-07-27	Edwards et al.	

INFORMATION DISCLOSURE STATEMENT BY APPLICANT (Not for submission under 37 CFR 1.99)	Application Number	16907887
	Filing Date	2020-06-22
	First Named Inventor	RALEIGH, GREGORY
	Art Unit	2434
	Examiner Name	KAPLAN, BENJAMIN
	Attorney Docket Number	RALEP025C1C1C1C1

	295	7769397	B2	2010-08-03	Funato et al.	
	296	7770785	B2	2010-08-10	Jha et al.	
	297	7774323	B2	2010-08-10	Helfman, Nadav	
	298	7774412	B1	2010-08-10	Schnepel, Soenke	
	299	7774456	B1	2010-08-10	Lownsbrough, Derek Leigh et al.	
	300	7778176		2010-08-17	Morford, Michael Robert	

If you wish to add additional U.S. Patent citation information please click the Add button. Add

U.S.PATENT APPLICATION PUBLICATIONS Remove

Examiner Initial*	Cite No	Publication Number	Kind Code[1]	Publication Date	Name of Patentee or Applicant of cited Document	Pages,Columns,Lines where Relevant Passages or Relevant Figures Appear
	1					

If you wish to add additional U.S. Published Application citation information please click the Add button. Add

FOREIGN PATENT DOCUMENTS Remove

Examiner Initial*	Cite No	Foreign Document Number[3]	Country Code[2]	Kind Code[4]	Publication Date	Name of Patentee or Applicant of cited Document	Pages,Columns,Lines where Relevant Passages or Relevant Figures Appear	T[5]

EFS Web 2.1.18

INFORMATION DISCLOSURE STATEMENT BY APPLICANT (Not for submission under 37 CFR 1.99)	Application Number	16907887
	Filing Date	2020-06-22
	First Named Inventor	RALEIGH, GREGORY
	Art Unit	2434
	Examiner Name	KAPLAN, BENJAMIN
	Attorney Docket Number	RALEP025C1C1C1C1

	1							

If you wish to add additional Foreign Patent Document citation information please click the Add button Add

NON-PATENT LITERATURE DOCUMENTS Remove

Examiner Initials*	Cite No	Include name of the author (in CAPITAL LETTERS), title of the article (when appropriate), title of the item (book, magazine, journal, serial, symposium, catalog, etc), date, pages(s), volume-issue number(s), publisher, city and/or country where published.	T[5]
	1		

If you wish to add additional non-patent literature document citation information please click the Add button Add

EXAMINER SIGNATURE

Examiner Signature		Date Considered	

*EXAMINER: Initial if reference considered, whether or not citation is in conformance with MPEP 609. Draw line through a citation if not in conformance and not considered. Include copy of this form with next communication to applicant.

[1] See Kind Codes of USPTO Patent Documents at www.USPTO.GOV or MPEP 901.04. [2] Enter office that issued the document, by the two-letter code (WIPO Standard ST.3). [3] For Japanese patent documents, the indication of the year of the reign of the Emperor must precede the serial number of the patent document. [4] Kind of document by the appropriate symbols as indicated on the document under WIPO Standard ST.16 if possible. [5] Applicant is to place a check mark here if English language translation is attached.

INFORMATION DISCLOSURE STATEMENT BY APPLICANT (Not for submission under 37 CFR 1.99)	Application Number	16907887
	Filing Date	2020-06-22
	First Named Inventor	RALEIGH, GREGORY
	Art Unit	2434
	Examiner Name	KAPLAN, BENJAMIN
	Attorney Docket Number	RALEP025C1C1C1C1

CERTIFICATION STATEMENT

Please see 37 CFR 1.97 and 1.98 to make the appropriate selection(s):

That each item of information contained in the information disclosure statement was first cited in any communication from a foreign patent office in a counterpart foreign application not more than three months prior to the filing of the information disclosure statement. See 37 CFR 1.97(e)(1).

OR

☐ That no item of information contained in the information disclosure statement was cited in a communication from a foreign patent office in a counterpart foreign application, and, to the knowledge of the person signing the certification after making reasonable inquiry, no item of information contained in the information disclosure statement was known to any individual designated in 37 CFR 1.56(c) more than three months prior to the filing of the information disclosure statement. See 37 CFR 1.97(e)(2).

See attached certification statement.

The fee set forth in 37 CFR 1.17 (p) has been submitted herewith.

☒ A certification statement is not submitted herewith.

SIGNATURE

A signature of the applicant or representative is required in accordance with CFR 1.33, 10.18. Please see CFR 1.4(d) for the form of the signature.

Signature	/James E. Harris/	Date (YYYY-MM-DD)	2021-02-03
Name/Print	James E. Harris	Registration Number	40013

This collection of information is required by 37 CFR 1.97 and 1.98. The information is required to obtain or retain a benefit by the public which is to file (and by the USPTO to process) an application. Confidentiality is governed by 35 U.S.C. 122 and 37 CFR 1.14. This collection is estimated to take 1 hour to complete, including gathering, preparing and submitting the completed application form to the USPTO. Time will vary depending upon the individual case. Any comments on the amount of time you require to complete this form and/or suggestions for reducing this burden, should be sent to the Chief Information Officer, U.S. Patent and Trademark Office, U.S. Department of Commerce, P.O. Box 1450, Alexandria, VA 22313-1450. DO NOT SEND FEES OR COMPLETED FORMS TO THIS ADDRESS. **SEND TO: Commissioner for Patents, P.O. Box 1450, Alexandria, VA 22313-1450.**

Privacy Act Statement

The Privacy Act of 1974 (P.L. 93-579) requires that you be given certain information in connection with your submission of the attached form related to a patent application or patent. Accordingly, pursuant to the requirements of the Act, please be advised that: (1) the general authority for the collection of this information is 35 U.S.C. 2(b)(2); (2) furnishing of the information solicited is voluntary; and (3) the principal purpose for which the information is used by the U.S. Patent and Trademark Office is to process and/or examine your submission related to a patent application or patent. If you do not furnish the requested information, the U.S. Patent and Trademark Office may not be able to process and/or examine your submission, which may result in termination of proceedings or abandonment of the application or expiration of the patent.

The information provided by you in this form will be subject to the following routine uses:

1. The information on this form will be treated confidentially to the extent allowed under the Freedom of Information Act (5 U.S.C. 552) and the Privacy Act (5 U.S.C. 552a). Records from this system of records may be disclosed to the Department of Justice to determine whether the Freedom of Information Act requires disclosure of these record s.

2. A record from this system of records may be disclosed, as a routine use, in the course of presenting evidence to a court, magistrate, or administrative tribunal, including disclosures to opposing counsel in the course of settlement negotiations.

3. A record in this system of records may be disclosed, as a routine use, to a Member of Congress submitting a request involving an individual, to whom the record pertains, when the individual has requested assistance from the Member with respect to the subject matter of the record.

4. A record in this system of records may be disclosed, as a routine use, to a contractor of the Agency having need for the information in order to perform a contract. Recipients of information shall be required to comply with the requirements of the Privacy Act of 1974, as amended, pursuant to 5 U.S.C. 552a(m).

5. A record related to an International Application filed under the Patent Cooperation Treaty in this system of records may be disclosed, as a routine use, to the International Bureau of the World Intellectual Property Organization, pursuant to the Patent Cooperation Treaty.

6. A record in this system of records may be disclosed, as a routine use, to another federal agency for purposes of National Security review (35 U.S.C. 181) and for review pursuant to the Atomic Energy Act (42 U.S.C. 218(c)).

7. A record from this system of records may be disclosed, as a routine use, to the Administrator, General Services, or his/her designee, during an inspection of records conducted by GSA as part of that agency's responsibility to recommend improvements in records management practices and programs, under authority of 44 U.S.C. 2904 and 2906. Such disclosure shall be made in accordance with the GSA regulations governing inspection of records for this purpose, and any other relevant (i.e., GSA or Commerce) directive. Such disclosure shall not be used to make determinations about individuals.

8. A record from this system of records may be disclosed, as a routine use, to the public after either publication of the application pursuant to 35 U.S.C. 122(b) or issuance of a patent pursuant to 35 U.S.C. 151. Further, a record may be disclosed, subject to the limitations of 37 CFR 1.14, as a routine use, to the public if the record was filed in an application which became abandoned or in which the proceedings were terminated and which application is referenced by either a published application, an application open to public inspections or an issued patent.

9. A record from this system of records may be disclosed, as a routine use, to a Federal, State, or local law enforcement agency, if the USPTO becomes aware of a violation or potential violation of law or regulation.

PTO/SB/08a (02-18)
Approved for use through 11/30/2020. OMB 0651-0031
U.S. Patent and Trademark Office; U.S. DEPARTMENT OF COMMERCE
Under the Paperwork Reduction Act of 1995, no persons are required to respond to a collection of information unless it contains a valid OMB control number.

INFORMATION DISCLOSURE STATEMENT BY APPLICANT

(Not for submission under 37 CFR 1.99)

Application Number	16907887
Filing Date	2020-06-22
First Named Inventor	RALEIGH, GREGORY
Art Unit	2434
Examiner Name	KAPLAN, BENJAMIN
Attorney Docket Number	RALEP025C1C1C1C1

U.S.PATENTS Remove

Examiner Initial*	Cite No	Patent Number	Kind Code[1]	Issue Date	Name of Patentee or Applicant of cited Document	Pages,Columns,Lines where Relevant Passages or Relevant Figures Appear
	1	8271045		2012-09-18	Parolkar, Satish et al.	
	2	8271049		2012-09-18	SILVER, Andrew et al.	
	3	8271992	B2	2012-09-18	Chatley, Scott P. et al.	
	4	8275415	B2	2012-09-25	Huslak, Nicholas S.	
	5	8275830	B2	2012-09-25	Raleigh	
	6	8279067		2012-10-02	BERGER, Thomas R. et al.	
	7	8279864		2012-10-02	Wood, Daniel M.	
	8	8280354		2012-10-02	Smith, Christopher et al.	

INFORMATION DISCLOSURE STATEMENT BY APPLICANT (Not for submission under 37 CFR 1.99)		
	Application Number	16907887
	Filing Date	2020-06-22
	First Named Inventor	RALEIGH, GREGORY
	Art Unit	2434
	Examiner Name	KAPLAN, BENJAMIN
	Attorney Docket Number	RALEP025C1C1C1C1

	9	8284740		2012-10-09	O'CONNOR, Dennis M.	
	10	8285249	B2	2012-10-09	Baker, Matthew Donald et al.	
	11	8285992	B2	2012-10-09	Mathur et al.	
	12	8290820	B2	2012-10-16	Plastina et al.	
	13	8291238		2012-10-16	GINTER, Karl L. et al.	
	14	8291439	B2	2012-10-16	Jethi et al.	
	15	8296404		2012-10-23	McDysan, Dave et al.	
	16	8300575	B2	2012-10-30	Willars, Per	
	17	8306518		2012-11-06	GAILLOUX, Michael A.	
	18	8306741	B2	2012-11-06	Tu, Ihung	
	19	8307067	B2	2012-11-06	Ryan, Nicholas M.	

INFORMATION DISCLOSURE STATEMENT BY APPLICANT (Not for submission under 37 CFR 1.99)		
	Application Number	16907887
	Filing Date	2020-06-22
	First Named Inventor	RALEIGH, GREGORY
	Art Unit	2434
	Examiner Name	KAPLAN, BENJAMIN
	Attorney Docket Number	RALEP025C1C1C1C1

	20	8310943	B2	2012-11-13	Mehta et al.	
	21	8315198	B2	2012-11-20	Corneille et al.	
	22	8315593	B2	2012-11-20	Gallant et al.	
	23	8315594		2012-11-20	Mauser, Edward Ronald et al.	
	24	8315718		2012-11-20	Caffrey, Paul Oliver et al.	
	25	8315999	B2	2012-11-20	Chatley, Scott P. et al.	
	26	8320244	B2	2012-11-27	Muqattash et al.	
	27	8320949		2012-11-27	Matta, Sudheer Poorna Chandra	
	28	8325638		2012-12-04	Jin, Haipeng et al.	
	29	8325906	B2	2012-12-04	Fullarton et al.	
	30	8326319	B2	2012-12-04	Davis, Richard W.	

INFORMATION DISCLOSURE STATEMENT BY APPLICANT (Not for submission under 37 CFR 1.99)		
	Application Number	16907887
	Filing Date	2020-06-22
	First Named Inventor	RALEIGH, GREGORY
	Art Unit	2434
	Examiner Name	KAPLAN, BENJAMIN
	Attorney Docket Number	RALEP025C1C1C1C1

	31	8326828	B2	2012-12-04	Zhou et al.	
	32	8331223	B2	2012-12-11	Hill et al.	
	33	8331293		2012-12-11	Sood, Kapil	
	34	8332375		2012-12-11	Chatley, Scott P. et al.	
	35	8339991	B2	2012-12-25	Biswas et al.	
	36	8340625	B1	2012-12-25	Johnson et al.	
	37	8340628	B2	2012-12-25	Taylor et al.	
	38	8340678	B1	2012-12-25	Pandey, Vinod	
	39	8340718		2012-12-25	Colonna, Massimo et al.	
	40	8346210	B2	2013-01-01	Balsan et al.	
	41	8346225	B2	2013-01-01	Raleigh	

INFORMATION DISCLOSURE STATEMENT BY APPLICANT (Not for submission under 37 CFR 1.99)		
	Application Number	16907887
	Filing Date	2020-06-22
	First Named Inventor	RALEIGH, GREGORY
	Art Unit	2434
	Examiner Name	KAPLAN, BENJAMIN
	Attorney Docket Number	RALEP025C1C1C1C1

	42	8346923	B2	2013-01-01	Rowles et al.	
	43	8347104	B2	2013-01-01	Pathiyal, Krishna K.	
	44	8347362		2013-01-01	Cai, Yigang et al.	
	45	8347378	B2	2013-01-01	Merkin et al.	
	46	8350700		2013-01-08	Fast, Raymond D. et al.	
	47	8351592	B2	2013-01-08	Freeny Jr et al.	
	48	8351898	B2	2013-01-08	Raleigh	
	49	8352360	B2	2013-01-08	De Judicibus et al.	
	50	8352980		2013-01-08	Howcroft, Jerald Robert	
	51	8353001		2013-01-08	Herrod, Allan	
	52	8355570	B2	2013-01-15	Karsanbhai et al.	

INFORMATION DISCLOSURE STATEMENT BY APPLICANT (Not for submission under 37 CFR 1.99)		
	Application Number	16907887
	Filing Date	2020-06-22
	First Named Inventor	RALEIGH, GREGORY
	Art Unit	2434
	Examiner Name	KAPLAN, BENJAMIN
	Attorney Docket Number	RALEP025C1C1C1C1

	53	8355696	B1	2013-01-15	Olding et al.	
	54	8356336	B2	2013-01-15	Johnston, Keith et al.	
	55	8358638	B2	2013-01-22	Scherzer, Tamir et al.	
	56	8358975	B2	2013-01-22	Bahl et al.	
	57	8363658		2013-01-29	Delker, Jason R. et al.	
	58	8363799	B2	2013-01-29	Gruchala et al.	
	59	8364089		2013-01-29	PHILLIPS, Derek	
	60	8364806		2013-01-29	Short, Joel E. et al.	
	61	8369274	B2	2013-02-05	Sawai, Ryo	
	62	8370477		2013-02-05	Short, Joel E. et al.	
	63	8370483	B	2013-02-05	Choong Jason et al.	

INFORMATION DISCLOSURE STATEMENT BY APPLICANT (Not for submission under 37 CFR 1.99)		
	Application Number	16907887
	Filing Date	2020-06-22
	First Named Inventor	RALEIGH, GREGORY
	Art Unit	2434
	Examiner Name	KAPLAN, BENJAMIN
	Attorney Docket Number	RALEP025C1C1C1C1

	64	8374090		2013-02-12	Morrill, Robert J. et al.	
	65	8374592		2013-02-12	Proctor, Jr. James A. et al.	
	66	8375128	B2	2013-02-12	Tofighbakhsh et al.	
	67	8375136	B2	2013-02-12	Roman et al.	
	68	8380247	B2	2013-02-19	Engstrom	
	69	8385199	B1	2013-02-26	Coward et al.	
	70	8385896		2013-02-26	Proctor Jr., James A. et al.	
	71	8385964	B2	2013-02-26	Haney, Richard D.	
	72	8385975	B2	2013-02-26	Forutanpour et al.	
	73	8386386		2013-02-26	Zhu, Kevin	
	74	8391262	B2	2013-03-05	Maki et al.	

INFORMATION DISCLOSURE STATEMENT BY APPLICANT (Not for submission under 37 CFR 1.99)		
	Application Number	16907887
	Filing Date	2020-06-22
	First Named Inventor	RALEIGH, GREGORY
	Art Unit	2434
	Examiner Name	KAPLAN, BENJAMIN
	Attorney Docket Number	RALEP025C1C1C1C1

	75	8391834	B2	2013-03-05	Raleigh	
	76	8392982	B2	2013-03-05	Harris et al.	
	77	8396458	B	2013-03-12	Raleigh, Gregory G.	
	78	8396929		2013-03-12	Helfman, Nadav et al.	
	79	8401968	B1	2013-03-19	Schattauer et al.	
	80	8402165	B2	2013-03-19	Deu-Ngoc et al.	
	81	8402540		2013-03-19	Kapoor, Harsh et al.	
	82	8406427		2013-03-26	Chand, Naresh et al.	
	83	8406736	B2	2013-03-26	Das et al.	
	84	8407763	B2	2013-03-26	Weller et al.	
	85	8411587		2013-04-02	Curtis, William et al.	

INFORMATION DISCLOSURE STATEMENT BY APPLICANT (Not for submission under 37 CFR 1.99)		
	Application Number	16907887
	Filing Date	2020-06-22
	First Named Inventor	RALEIGH, GREGORY
	Art Unit	2434
	Examiner Name	KAPLAN, BENJAMIN
	Attorney Docket Number	RALEP025C1C1C1C1

	86	8411691	B2	2013-04-02	Aggarwal	
	87	8412798	B1	2013-04-02	Wang, Frank C.	
	88	8413245	B2	2013-04-02	Kraemer et al.	
	89	8418168	B2	2013-04-09	Tyhurst et al.	
	90	8422988		2013-04-16	KESHAV, Srinivasan	
	91	8423016		2013-04-16	BUCKLEY, Adrian et al.	
	92	8429403		2013-04-23	Moret, Eric et al.	
	93	8437734		2013-05-07	Ray, Amar N. et al.	
	94	8442015	B2	2013-05-14	Behzad et al.	
	95	8446831	B2	2013-05-21	Kwan et al.	
	96	8447324		2013-05-21	Shuman, Mohammed Ataur et al.	

INFORMATION DISCLOSURE STATEMENT BY APPLICANT (Not for submission under 37 CFR 1.99)		
	Application Number	16907887
	Filing Date	2020-06-22
	First Named Inventor	RALEIGH, GREGORY
	Art Unit	2434
	Examiner Name	KAPLAN, BENJAMIN
	Attorney Docket Number	RALEP025C1C1C1C1

	97	8447607	B2	2013-05-21	Weider, Chris et al.	
	98	8447980		2013-05-21	Godfrey, James A. et al.	
	99	8448015	B2	2013-05-21	Gerhart, David	
	100	8452858	B2	2013-05-28	Wu et al.	
	101	8457603	B2	2013-06-04	EL-KADRI et al.	
	102	8461958	B2	2013-06-11	Saenz et al.	
	103	8463194	B2	2013-06-11	Erlenback et al.	
	104	8463232	B2	2013-06-11	Tuli et al.	
	105	8468337	B2	2013-06-18	Gaur, Santosh P. et al.	
	106	8472371		2013-06-25	Bari, Farooq et al.	
	107	8477778		2013-07-02	Lehmann Jr., L. Curtis et al.	

INFORMATION DISCLOSURE STATEMENT BY APPLICANT (Not for submission under 37 CFR 1.99)		
	Application Number	16907887
	Filing Date	2020-06-22
	First Named Inventor	RALEIGH, GREGORY
	Art Unit	2434
	Examiner Name	KAPLAN, BENJAMIN
	Attorney Docket Number	RALEP025C1C1C1C1

	108	8478840	B2	2013-07-02	Skutela et al.	
	109	8483057	B2	2013-07-09	Cuervo	
	110	8483135		2013-07-09	Cai, Yigang et al.	
	111	8483694	B2	2013-07-09	Lewis et al.	
	112	8484327	B2	2013-07-09	Werner et al.	
	113	8488597	B2	2013-07-16	Nie et al.	
	114	8489110	B2	2013-07-16	Frank et al.	
	115	8489720	B1	2013-07-16	Morford, Michael et al.	
	116	8494559	B1	2013-07-23	Malmi	
	117	8495181	B2	2013-07-23	Venkatraman et al.	
	118	8495207	B2	2013-07-23	Lee	

INFORMATION DISCLOSURE STATEMENT BY APPLICANT (Not for submission under 37 CFR 1.99)		
	Application Number	16907887
	Filing Date	2020-06-22
	First Named Inventor	RALEIGH, GREGORY
	Art Unit	2434
	Examiner Name	KAPLAN, BENJAMIN
	Attorney Docket Number	RALEP025C1C1C1C1

	119	8495227		2013-07-23	Kaminsky, David L. et al.	
	120	8495360		2013-07-23	Falk, Rainer et al.	
	121	8495700	B2	2013-07-23	Shahbazi	
	122	8495743	B2	2013-07-23	Kraemer et al.	
	123	8499087	B2	2013-07-30	Hu, Qingmin	
	124	8500533	B2	2013-08-06	Lutnick et al.	
	125	8503358	B2	2013-08-06	Hanson et al.	
	126	8503455	B2	2013-08-06	Heikens, Heico	
	127	8504032	B2	2013-08-06	Lott et al.	
	128	8504574	B2	2013-08-06	Dvorak et al.	
	129	8504687	B2	2013-08-06	Maffione et al.	

INFORMATION DISCLOSURE STATEMENT BY APPLICANT (Not for submission under 37 CFR 1.99)		
	Application Number	16907887
	Filing Date	2020-06-22
	First Named Inventor	RALEIGH, GREGORY
	Art Unit	2434
	Examiner Name	KAPLAN, BENJAMIN
	Attorney Docket Number	RALEP025C1C1C1C1

	130	8504690	B2	2013-08-06	Shah et al.	
	131	8504729		2013-08-06	Pezzutti, David A.	
	132	8505073	B2	2013-08-06	Taglienti et al.	
	133	8509082	B2	2013-08-13	Heinz, John M. et al.	
	134	8514927	B2	2013-08-20	Sundararajan et al.	
	135	8516552	B2	2013-08-20	Raleigh	
	136	8520589		2013-08-27	Bhatt, Yogesh et al.	
	137	8520595	B2	2013-08-27	Yadav et al.	
	138	8521110		2013-08-27	Rofougaran, Ahmadreza	
	139	8521775	B1	2013-08-27	Poh et al.	
	140	8522039	B2	2013-08-27	Hyndman et al.	

INFORMATION DISCLOSURE STATEMENT BY APPLICANT (Not for submission under 37 CFR 1.99)		
	Application Number	16907887
	Filing Date	2020-06-22
	First Named Inventor	RALEIGH, GREGORY
	Art Unit	2434
	Examiner Name	KAPLAN, BENJAMIN
	Attorney Docket Number	RALEP025C1C1C1C1

	141	8522249	B2	2013-08-27	Beaule, Stephane	
	142	8522337	B2	2013-08-27	Adusumilli et al.	
	143	8523547	B2	2013-09-03	Pekrul, Merton W.	
	144	8526329	B2	2013-09-03	Mahany, Ronald L. et al.	
	145	8526350	B2	2013-09-03	Xue, Qi et al.	
	146	8527013	B2	2013-09-03	Guba et al.	
	147	8527410	B2	2013-09-03	Markki et al.	
	148	8527662	B2	2013-09-03	Biswas et al.	
	149	8528068	B1	2013-09-03	Weglein et al.	
	150	8531954	B2	2013-09-10	McNaughton et al.	
	151	8531995	B2	2013-09-10	Khan et al.	

INFORMATION DISCLOSURE STATEMENT BY APPLICANT (Not for submission under 37 CFR 1.99)	Application Number	16907887
	Filing Date	2020-06-22
	First Named Inventor	RALEIGH, GREGORY
	Art Unit	2434
	Examiner Name	KAPLAN, BENJAMIN
	Attorney Docket Number	RALEP025C1C1C1C1

	152	8532610	B2	2013-09-10	Manning Cassett et al.	
	153	8533775	B2	2013-09-10	Alcorn et al.	
	154	8535160	B2	2013-09-17	Lutnick et al.	
	155	8538394	B2	2013-09-17	Zimmerman et al.	
	156	8538421	B2	2013-09-17	Brisebois et al.	
	157	8538458	B2	2013-09-17	Haney, Richard D.	
	158	8539544	B2	2013-09-17	Garimella et al.	
	159	8543265	B2	2013-09-24	Ekhaguere et al.	
	160	8543814	B2	2013-09-24	Laitinen et al.	
	161	8544105	B2	2013-09-24	Mclean et al.	
	162	8548427	B2	2013-10-01	Chow et al.	

INFORMATION DISCLOSURE STATEMENT BY APPLICANT (Not for submission under 37 CFR 1.99)		
	Application Number	16907887
	Filing Date	2020-06-22
	First Named Inventor	RALEIGH, GREGORY
	Art Unit	2434
	Examiner Name	KAPLAN, BENJAMIN
	Attorney Docket Number	RALEP025C1C1C1C1

	163	8549173	B1	2013-10-01	Wu et al.	
	164	8554876	B2	2013-10-08	Winsor, Gerald W.	
	165	8559369	B2	2013-10-15	Barkan	
	166	8561138	B2	2013-10-15	Rothman, Michael M. et al.	
	167	8565746	B2	2013-10-22	Hoffman, George E.	
	168	8566236	B2	2013-10-22	Busch, James David	
	169	8571474	B2	2013-10-29	Chavez et al.	
	170	8571501	B2	2013-10-29	Miller et al.	
	171	8571598	B2	2013-10-29	Valavi, John J.	
	172	8571993	B2	2013-10-29	Kocher et al.	
	173	8572117	B2	2013-10-29	Rappaport, Theodore S.	

INFORMATION DISCLOSURE STATEMENT BY APPLICANT (Not for submission under 37 CFR 1.99)		
	Application Number	16907887
	Filing Date	2020-06-22
	First Named Inventor	RALEIGH, GREGORY
	Art Unit	2434
	Examiner Name	KAPLAN, BENJAMIN
	Attorney Docket Number	RALEP025C1C1C1C1

	174	8572256	B2	2013-10-29	Babbar, Uppinder Singh	
	175	8583499		2013-11-12	De Judicibus, Dario et al.	
	176	8588240	B2	2013-11-19	Ramankutty et al.	
	177	8589955	B2	2013-11-19	Roundtree et al.	
	178	8594665	B2	2013-11-26	Anschutz, Thomas	
	179	8595186	B1	2013-11-26	Mandyam et al.	
	180	8600895	B2	2013-12-03	Felsher, David Paul	
	181	8601125	B2	2013-12-03	Huang et al.	
	182	8605691	B2	2013-12-10	Soomro et al.	
	183	8615507	B2	2013-12-24	VARADARAJULU et al.	
	184	8619735	B2	2013-12-31	Montemurro et al.	

INFORMATION DISCLOSURE STATEMENT BY APPLICANT (Not for submission under 37 CFR 1.99)		
	Application Number	16907887
	Filing Date	2020-06-22
	First Named Inventor	RALEIGH, GREGORY
	Art Unit	2434
	Examiner Name	KAPLAN, BENJAMIN
	Attorney Docket Number	RALEP025C1C1C1C1

	185	8620257	B2	2013-12-31	Qiu et al.	
	186	8630925	B2	2014-01-14	Bystrom et al.	
	187	8631428	B2	2014-01-14	Scott et al.	
	188	8634425	B2	2014-01-21	Gorti et al.	
	189	8635164	B2	2014-01-21	Rosenhaft et al.	
	190	8639215	B2	2014-01-28	McGregor et al.	
	191	8644702	B1	2014-02-04	Kalajan, Kevin E.	
	192	8644813	B1	2014-02-04	Gailloux et al.	
	193	8645518	B	2014-02-04	David, Scott L.	
	194	8655357	B1	2014-02-18	Gazzard et al.	
	195	8656472	B2	2014-02-18	McMurtry et al.	

INFORMATION DISCLOSURE STATEMENT BY APPLICANT (Not for submission under 37 CFR 1.99)		
	Application Number	16907887
	Filing Date	2020-06-22
	First Named Inventor	RALEIGH, GREGORY
	Art Unit	2434
	Examiner Name	KAPLAN, BENJAMIN
	Attorney Docket Number	RALEP025C1C1C1C1

	196	8660853	B2	2014-02-25	Robb et al.	
	197	8666395	B2	2014-03-04	Silver, Andrew	
	198	8667542	B1	2014-03-04	Bertz et al.	
	199	8670334	B	2014-03-11	Keohane et al.	
	200	8675852	B2	2014-03-18	Maes, Stephane H.	
	201	8676682	B2	2014-03-18	Kalliola, Janne	
	202	8676925	B	2014-03-18	Liu et al.	
	203	8693323		2014-04-08	McDysan, David E.	
	204	8694772	B2	2014-04-08	Kao et al.	
	205	8700729	B2	2014-04-15	Dua, Robin	
	206	8701015	B2	2014-04-15	Bonnat, Pierre	

INFORMATION DISCLOSURE STATEMENT BY APPLICANT (Not for submission under 37 CFR 1.99)		
	Application Number	16907887
	Filing Date	2020-06-22
	First Named Inventor	RALEIGH, GREGORY
	Art Unit	2434
	Examiner Name	KAPLAN, BENJAMIN
	Attorney Docket Number	RALEP025C1C1C1C1

	207	8705361	B2	2014-04-22	Venkataraman et al.	
	208	8706863		2014-04-22	Fadell, Anthony	
	209	8713535	B2	2014-04-29	Malhotra et al.	
	210	8713641	B1	2014-04-29	Pagan et al.	
	211	8719397	B2	2014-05-06	Levi et al.	
	212	8719423	B2	2014-05-06	Wyld	
	213	8724486	B2	2014-05-13	Seto et al.	
	214	8725899	B	2014-05-13	Short et al.	
	215	8730842	B2	2014-05-20	Collins et al.	
	216	8731519	B2	2014-05-20	Flynn et al.	
	217	8732808	B2	2014-05-20	Sewall et al.	

INFORMATION DISCLOSURE STATEMENT BY APPLICANT (Not for submission under 37 CFR 1.99)		
	Application Number	16907887
	Filing Date	2020-06-22
	First Named Inventor	RALEIGH, GREGORY
	Art Unit	2434
	Examiner Name	KAPLAN, BENJAMIN
	Attorney Docket Number	RALEP025C1C1C1C1

	218	8739035	B2	2014-05-27	Trethewey, Jim	
	219	8744339	B2	2014-06-03	Halfmann et al.	
	220	8761711	B2	2014-06-24	Grignani et al.	
	221	8780857	B2	2014-07-15	Balasubramanian et al.	
	222	8787249	B2	2014-07-22	Giaretta et al.	
	223	8792857	B2	2014-07-29	Cai et al.	
	224	8793304	B2	2014-07-29	Lu et al.	
	225	8798610	B2	2014-08-05	Prakash et al.	
	226	8799440	B2	2014-08-05	Zhou et al.	
	227	8804695	B2	2014-08-12	Branam	
	228	8811338	B2	2014-08-19	Jin et al.	

INFORMATION DISCLOSURE STATEMENT BY APPLICANT (Not for submission under 37 CFR 1.99)		
	Application Number	16907887
	Filing Date	2020-06-22
	First Named Inventor	RALEIGH, GREGORY
	Art Unit	2434
	Examiner Name	KAPLAN, BENJAMIN
	Attorney Docket Number	RALEP025C1C1C1C1

	229	8811991	B2	2014-08-19	Jain et al.	
	230	8818394	B2	2014-08-26	Bienas et al.	
	231	8819253	B2	2014-08-26	Simeloff et al.	
	232	8825109	B2	2014-09-02	Montemurro et al.	
	233	8826411	B2	2014-09-02	Moen et al.	
	234	8831561	B2	2014-09-09	Sutaria et al.	
	235	8838752	B2	2014-09-16	Lor et al.	
	236	8843849	B2	2014-09-23	Neil et al.	
	237	8845415	B2	2014-09-30	Lutnick et al.	
	238	8849297	B2	2014-09-30	Balasubramanian	
	239	8855620	B2	2014-10-07	Sievers et al.	

INFORMATION DISCLOSURE STATEMENT BY APPLICANT (Not for submission under 37 CFR 1.99)	Application Number	16907887
	Filing Date	2020-06-22
	First Named Inventor	RALEIGH, GREGORY
	Art Unit	2434
	Examiner Name	KAPLAN, BENJAMIN
	Attorney Docket Number	RALEP025C1C1C1C1

	240	8862751	B2	2014-10-14	Faccin et al.	
	241	8863111	B2	2014-10-14	Selitser et al.	
	242	8875042	B2	2014-10-28	LeJeune et al.	
	243	8880047	B2	2014-11-04	Konicek et al.	
	244	8891483	B2	2014-11-18	Connelly et al.	
	245	8898748	B2	2014-11-25	Burks et al.	
	246	8908516	B2	2014-12-09	Tzamaloukas et al.	
	247	8929374	B2	2015-01-06	Tönsing et al.	
	248	8930238	B2	2015-01-06	Coffman et al.	
	249	8930551	B2	2015-01-06	Pandya et al.	
	250	8943551	B2	2015-01-27	Ganapathy et al.	

INFORMATION DISCLOSURE STATEMENT BY APPLICANT (Not for submission under 37 CFR 1.99)		
	Application Number	16907887
	Filing Date	2020-06-22
	First Named Inventor	RALEIGH, GREGORY
	Art Unit	2434
	Examiner Name	KAPLAN, BENJAMIN
	Attorney Docket Number	RALEP025C1C1C1C1

	251	8948726	B2	2015-02-03	Smith et al.	
	252	8949382	B2	2015-02-03	Cornett et al.	
	253	8949597	B1	2015-02-03	Reeves et al.	
	254	8955038	B2	2015-02-10	Nicodemus et al.	
	255	8966018	B2	2015-02-24	Bugwadia et al.	
	256	8971912	B2	2015-03-03	Chou et al.	
	257	8977284	B2	2015-03-10	Reed, Mark J.	
	258	8995952	B1	2015-03-31	Baker et al.	
	259	9002342	B2	2015-04-07	Tenhunen et al.	
	260	9014973	B2	2015-04-21	Ruckart, John	
	261	9015331	B2	2015-04-21	Lai et al.	

INFORMATION DISCLOSURE STATEMENT BY APPLICANT (Not for submission under 37 CFR 1.99)		
	Application Number	16907887
	Filing Date	2020-06-22
	First Named Inventor	RALEIGH, GREGORY
	Art Unit	2434
	Examiner Name	KAPLAN, BENJAMIN
	Attorney Docket Number	RALEP025C1C1C1C1

	262	9026100	B2	2015-05-05	Castro et al.	
	263	9030934	B2	2015-05-12	Shah et al.	
	264	9049010		2015-06-02	Jueneman et al.	
	265	9064275	B1	2015-06-23	Lu et al.	
	266	9105031	B2	2015-08-11	Shen et al.	
	267	9111088	B2	2015-08-18	Ghai et al.	
	268	9137286	B1	2015-09-15	Yuan	
	269	9172553	B2	2015-10-27	Dawes et al.	
	270	9177455	B2	2015-11-03	Remer, David M.	
	271	9282460	B2	2016-03-08	Souissi, Slim Salah	
	272	9286469	B2	2016-03-15	Kraemer et al.	

INFORMATION DISCLOSURE STATEMENT BY APPLICANT (Not for submission under 37 CFR 1.99)		
	Application Number	16907887
	Filing Date	2020-06-22
	First Named Inventor	RALEIGH, GREGORY
	Art Unit	2434
	Examiner Name	KAPLAN, BENJAMIN
	Attorney Docket Number	RALEP025C1C1C1C1

	273	9286604	B2	2016-03-15	Aabye et al.	
	274	9313708	B2	2016-04-12	Nam et al.	
	275	9325737	B2	2016-04-26	Gutowski et al.	
	276	9326173	B2	2016-04-26	Luft, Achim	
	277	9344557	B2	2016-05-17	Gruchala et al.	
	278	9363285	B2	2016-06-07	Kitamura	
	279	9367680	B2	2016-06-14	Mahaffey et al.	
	280	9413546	B2	2016-08-09	Meier et al.	
	281	9418381	B2	2016-08-16	Ahuja et al.	
	282	9459767	B2	2016-10-04	Cockcroft et al.	
	283	9501803	B2	2016-11-22	Bilac et al.	

INFORMATION DISCLOSURE STATEMENT BY APPLICANT (Not for submission under 37 CFR 1.99)	Application Number	16907887
	Filing Date	2020-06-22
	First Named Inventor	RALEIGH, GREGORY
	Art Unit	2434
	Examiner Name	KAPLAN, BENJAMIN
	Attorney Docket Number	RALEP025C1C1C1C1

	284	9544397	B2	2017-01-10	Raleigh et al.	
	285	9589117	B2	2017-03-07	Ali et al.	
	286	9609459	B2	2017-03-28	Raleigh, Gregory G.	
	287	9712476	B2	2017-07-18	Boynton et al.	
	288	9942796	B2	2018-04-10	Raleigh	
	289	9986413	B2	2018-05-29	Raleigh	
	290	RE44412		2013-08-06	Naqvi et al.	

If you wish to add additional U.S. Patent citation information please click the Add button. Add

U.S.PATENT APPLICATION PUBLICATIONS Remove

Examiner Initial*	Cite No	Publication Number	Kind Code[1]	Publication Date	Name of Patentee or Applicant of cited Document	Pages,Columns,Lines where Relevant Passages or Relevant Figures Appear
	1					

If you wish to add additional U.S. Published Application citation information please click the Add button. Add

FOREIGN PATENT DOCUMENTS Remove

INFORMATION DISCLOSURE STATEMENT BY APPLICANT (Not for submission under 37 CFR 1.99)		
	Application Number	16907887
	Filing Date	2020-06-22
	First Named Inventor	RALEIGH, GREGORY
	Art Unit	2434
	Examiner Name	KAPLAN, BENJAMIN
	Attorney Docket Number	RALEP025C1C1C1C1

Examiner Initial*	Cite No	Foreign Document Number[3]	Country Code[2]	Kind Code[4]	Publication Date	Name of Patentee or Applicant of cited Document	Pages,Columns,Lines where Relevant Passages or Relevant Figures Appear	T[5]
	1							

If you wish to add additional Foreign Patent Document citation information please click the Add button Add

NON-PATENT LITERATURE DOCUMENTS Remove

Examiner Initials*	Cite No	Include name of the author (in CAPITAL LETTERS), title of the article (when appropriate), title of the item (book, magazine, journal, serial, symposium, catalog, etc), date, pages(s), volume-issue number(s), publisher, city and/or country where published.	T[5]
	1		

If you wish to add additional non-patent literature document citation information please click the Add button Add

EXAMINER SIGNATURE

Examiner Signature		Date Considered	

*EXAMINER: Initial if reference considered, whether or not citation is in conformance with MPEP 609. Draw line through a citation if not in conformance and not considered. Include copy of this form with next communication to applicant.

[1] See Kind Codes of USPTO Patent Documents at www.USPTO.GOV or MPEP 901.04. [2] Enter office that issued the document, by the two-letter code (WIPO Standard ST.3). [3] For Japanese patent documents, the indication of the year of the reign of the Emperor must precede the serial number of the patent document. [4] Kind of document by the appropriate symbols as indicated on the document under WIPO Standard ST.16 if possible. [5] Applicant is to place a check mark here if English language translation is attached.

INFORMATION DISCLOSURE STATEMENT BY APPLICANT (Not for submission under 37 CFR 1.99)	Application Number	16907887
	Filing Date	2020-06-22
	First Named Inventor	RALEIGH, GREGORY
	Art Unit	2434
	Examiner Name	KAPLAN, BENJAMIN
	Attorney Docket Number	RALEP025C1C1C1C1

CERTIFICATION STATEMENT

Please see 37 CFR 1.97 and 1.98 to make the appropriate selection(s):

That each item of information contained in the information disclosure statement was first cited in any communication from a foreign patent office in a counterpart foreign application not more than three months prior to the filing of the information disclosure statement. See 37 CFR 1.97(e)(1).

OR

☐ That no item of information contained in the information disclosure statement was cited in a communication from a foreign patent office in a counterpart foreign application, and, to the knowledge of the person signing the certification after making reasonable inquiry, no item of information contained in the information disclosure statement was known to any individual designated in 37 CFR 1.56(c) more than three months prior to the filing of the information disclosure statement. See 37 CFR 1.97(e)(2).

See attached certification statement.

The fee set forth in 37 CFR 1.17 (p) has been submitted herewith.

☒ A certification statement is not submitted herewith.

SIGNATURE

A signature of the applicant or representative is required in accordance with CFR 1.33, 10.18. Please see CFR 1.4(d) for the form of the signature.

Signature	/James E. Harris/	Date (YYYY-MM-DD)	2021-02-03
Name/Print	James E. Harris	Registration Number	40013

This collection of information is required by 37 CFR 1.97 and 1.98. The information is required to obtain or retain a benefit by the public which is to file (and by the USPTO to process) an application. Confidentiality is governed by 35 U.S.C. 122 and 37 CFR 1.14. This collection is estimated to take 1 hour to complete, including gathering, preparing and submitting the completed application form to the USPTO. Time will vary depending upon the individual case. Any comments on the amount of time you require to complete this form and/or suggestions for reducing this burden, should be sent to the Chief Information Officer, U.S. Patent and Trademark Office, U.S. Department of Commerce, P.O. Box 1450, Alexandria, VA 22313-1450. DO NOT SEND FEES OR COMPLETED FORMS TO THIS ADDRESS. **SEND TO: Commissioner for Patents, P.O. Box 1450, Alexandria, VA 22313-1450.**

Privacy Act Statement

The Privacy Act of 1974 (P.L. 93-579) requires that you be given certain information in connection with your submission of the attached form related to a patent application or patent. Accordingly, pursuant to the requirements of the Act, please be advised that: (1) the general authority for the collection of this information is 35 U.S.C. 2(b)(2); (2) furnishing of the information solicited is voluntary; and (3) the principal purpose for which the information is used by the U.S. Patent and Trademark Office is to process and/or examine your submission related to a patent application or patent. If you do not furnish the requested information, the U.S. Patent and Trademark Office may not be able to process and/or examine your submission, which may result in termination of proceedings or abandonment of the application or expiration of the patent.

The information provided by you in this form will be subject to the following routine uses:

1. The information on this form will be treated confidentially to the extent allowed under the Freedom of Information Act (5 U.S.C. 552) and the Privacy Act (5 U.S.C. 552a). Records from this system of records may be disclosed to the Department of Justice to determine whether the Freedom of Information Act requires disclosure of these record s.

2. A record from this system of records may be disclosed, as a routine use, in the course of presenting evidence to a court, magistrate, or administrative tribunal, including disclosures to opposing counsel in the course of settlement negotiations.

3. A record in this system of records may be disclosed, as a routine use, to a Member of Congress submitting a request involving an individual, to whom the record pertains, when the individual has requested assistance from the Member with respect to the subject matter of the record.

4. A record in this system of records may be disclosed, as a routine use, to a contractor of the Agency having need for the information in order to perform a contract. Recipients of information shall be required to comply with the requirements of the Privacy Act of 1974, as amended, pursuant to 5 U.S.C. 552a(m).

5. A record related to an International Application filed under the Patent Cooperation Treaty in this system of records may be disclosed, as a routine use, to the International Bureau of the World Intellectual Property Organization, pursuant to the Patent Cooperation Treaty.

6. A record in this system of records may be disclosed, as a routine use, to another federal agency for purposes of National Security review (35 U.S.C. 181) and for review pursuant to the Atomic Energy Act (42 U.S.C. 218(c)).

7. A record from this system of records may be disclosed, as a routine use, to the Administrator, General Services, or his/her designee, during an inspection of records conducted by GSA as part of that agency's responsibility to recommend improvements in records management practices and programs, under authority of 44 U.S.C. 2904 and 2906. Such disclosure shall be made in accordance with the GSA regulations governing inspection of records for this purpose, and any other relevant (i.e., GSA or Commerce) directive. Such disclosure shall not be used to make determinations about individuals.

8. A record from this system of records may be disclosed, as a routine use, to the public after either publication of the application pursuant to 35 U.S.C. 122(b) or issuance of a patent pursuant to 35 U.S.C. 151. Further, a record may be disclosed, subject to the limitations of 37 CFR 1.14, as a routine use, to the public if the record was filed in an application which became abandoned or in which the proceedings were terminated and which application is referenced by either a published application, an application open to public inspections or an issued patent.

9. A record from this system of records may be disclosed, as a routine use, to a Federal, State, or local law enforcement agency, if the USPTO becomes aware of a violation or potential violation of law or regulation.

UNITED STATES PATENT AND TRADEMARK OFFICE

UNITED STATES DEPARTMENT OF COMMERCE
United States Patent and Trademark Office
Address: COMMISSIONER FOR PATENTS
P.O. Box 1450
Alexandria, Virginia 22313-1450
www.uspto.gov

APPLICATION NUMBER	FILING OR 371(C) DATE	FIRST NAMED APPLICANT	ATTY. DOCKET NO./TITLE
16/907,887	06/22/2020	Gregory G. Raleigh	RALEP025C1C1C1C1

CONFIRMATION NO. 2653

106963
Headwater Research LLC
1011 Pruitt Place
Tyler, TX 75703

PUBLICATION NOTICE

OC000000120516271

Title: Security Techniques for Device Assisted Services

Publication No.US-2020-0322802-A1
Publication Date:10/08/2020

NOTICE OF PUBLICATION OF APPLICATION

The above-identified application will be electronically published as a patent application publication pursuant to 37 CFR 1.211, et seq. The patent application publication number and publication date are set forth above.

The publication may be accessed through the USPTO's publically available Searchable Databases via the Internet at www.uspto.gov. The direct link to access the publication is currently http://www.uspto.gov/patft/.

The publication process established by the Office does not provide for mailing a copy of the publication to applicant. A copy of the publication may be obtained from the Office upon payment of the appropriate fee set forth in 37 CFR 1.19(a)(1). Orders for copies of patent application publications are handled by the USPTO's Public Records Division. The Public Records Division can be reached by telephone at (571) 272-3150 or (800) 972-6382, by facsimile at (571) 273-3250, by mail addressed to the United States Patent and Trademark Office, Public Records Division, Alexandria, VA 22313-1450 or via the Internet.

In addition, information on the status of the application, including the mailing date of Office actions and the dates of receipt of correspondence filed in the Office, may also be accessed via the Internet through the Patent Electronic Business Center at www.uspto.gov using the public side of the Patent Application Information and Retrieval (PAIR) system. The direct link to access this status information is currently https://portal.uspto.gov/pair/PublicPair. Prior to publication, such status information is confidential and may only be obtained by applicant using the private side of PAIR.

Further assistance in electronically accessing the publication, or about PAIR, is available by calling the Patent Electronic Business Center at 1-866-217-9197.

Office of Data Managment, Application Assistance Unit (571) 272-4000, or (571) 272-4200, or 1-888-786-0101

UNITED STATES PATENT AND TRADEMARK OFFICE

UNITED STATES DEPARTMENT OF COMMERCE
United States Patent and Trademark Office
Address: COMMISSIONER FOR PATENTS
P.O. Box 1450
Alexandria, Virginia 22313-1450
www.uspto.gov

APPLICATION NUMBER	FILING or 371(c) DATE	GRP ART UNIT	FIL FEE REC'D	ATTY.DOCKET.NO	TOT CLAIMS	IND CLAIMS
16/907,887	06/22/2020		865	RALEP025C1C1C1C1	12	1

CONFIRMATION NO. 2653

106963
Headwater Research LLC
1011 Pruitt Place
Tyler, TX 75703

FILING RECEIPT

OC000000118138153

Date Mailed: 07/02/2020

Receipt is acknowledged of this non-provisional utility patent application. The application will be taken up for examination in due course. Applicant will be notified as to the results of the examination. Any correspondence concerning the application must include the following identification information: the U.S. APPLICATION NUMBER, FILING DATE, NAME OF FIRST INVENTOR, and TITLE OF INVENTION. Fees transmitted by check or draft are subject to collection.

Please verify the accuracy of the data presented on this receipt. If an error is noted on this Filing Receipt, please submit a written request for a corrected Filing Receipt, including a properly marked-up ADS showing the changes with strike-through for deletions and underlining for additions. If you received a "Notice to File Missing Parts" or other Notice requiring a response for this application, please submit any request for correction to this Filing Receipt with your reply to the Notice. When the USPTO processes the reply to the Notice, the USPTO will generate another Filing Receipt incorporating the requested corrections provided that the request is grantable.

Inventor(s)

Gregory G. Raleigh, Woodside, CA;

Applicant(s)

Headwater Research LLC, Tyler, TX;

Assignment For Published Patent Application

Headwater Research LLC, Tyler, TX

Power of Attorney: None

Domestic Priority data as claimed by applicant

This application is a CON of 16/034,362 07/13/2018 PAT 10694385
which is a CON of 14/948,065 11/20/2015 PAT 10028144
which is a CON of 13/737,748 01/09/2013 PAT 9198042
which is a CON of 12/694,445 01/27/2010 PAT 8391834
which is a CIP of 12/380,780 03/02/2009 PAT 8839388
and claims benefit of 61/252,151 10/15/2009
and said 12/380,780 03/02/2009
claims benefit of 61/206,354 01/28/2009
and claims benefit of 61/206,944 02/04/2009
and claims benefit of 61/207,393 02/10/2009
and claims benefit of 61/207,739 02/13/2009

Foreign Applications for which priority is claimed (You may be eligible to benefit from the **Patent Prosecution Highway** program at the USPTO. Please see http://www.uspto.gov for more information.) - None.

Foreign application information must be provided in an Application Data Sheet in order to constitute a claim to foreign priority. See 37 CFR 1.55 and 1.76.

Permission to Access Application via Priority Document Exchange: Yes

Permission to Access Search Results: Yes

Applicant may provide or rescind an authorization for access using Form PTO/SB/39 or Form PTO/SB/69 as appropriate.

If Required, Foreign Filing License Granted: 06/30/2020

The country code and number of your priority application, to be used for filing abroad under the Paris Convention, is **US 16/907,887**

Projected Publication Date: 10/08/2020

Non-Publication Request: No

Early Publication Request: No
**** SMALL ENTITY ****
Title

Security Techniques for Device Assisted Services

Preliminary Class

Statement under 37 CFR 1.55 or 1.78 for AIA (First Inventor to File) Transition Applications: No

PROTECTING YOUR INVENTION OUTSIDE THE UNITED STATES

Since the rights granted by a U.S. patent extend only throughout the territory of the United States and have no effect in a foreign country, an inventor who wishes patent protection in another country must apply for a patent in a specific country or in regional patent offices. Applicants may wish to consider the filing of an international application under the Patent Cooperation Treaty (PCT). An international (PCT) application generally has the same effect as a regular national patent application in each PCT-member country. The PCT process **simplifies** the filing of patent applications on the same invention in member countries, but **does not result** in a grant of "an international patent" and does not eliminate the need of applicants to file additional documents and fees in countries where patent protection is desired.

Almost every country has its own patent law, and a person desiring a patent in a particular country must make an application for patent in that country in accordance with its particular laws. Since the laws of many countries differ in various respects from the patent law of the United States, applicants are advised to seek guidance from specific foreign countries to ensure that patent rights are not lost prematurely.

Applicants also are advised that in the case of inventions made in the United States, the Director of the USPTO must issue a license before applicants can apply for a patent in a foreign country. The filing of a U.S. patent application serves as a request for a foreign filing license. The application's filing receipt contains further information and guidance as to the status of applicant's license for foreign filing.

Applicants may wish to consult the USPTO booklet, "General Information Concerning Patents" (specifically, the section entitled "Treaties and Foreign Patents") for more information on timeframes and deadlines for filing foreign

patent applications. The guide is available either by contacting the USPTO Contact Center at 800-786-9199, or it can be viewed on the USPTO website at http://www.uspto.gov/web/offices/pac/doc/general/index.html.

For information on preventing theft of your intellectual property (patents, trademarks and copyrights), you may wish to consult the U.S. Government website, http://www.stopfakes.gov. Part of a Department of Commerce initiative, this website includes self-help "toolkits" giving innovators guidance on how to protect intellectual property in specific countries such as China, Korea and Mexico. For questions regarding patent enforcement issues, applicants may call the U.S. Government hotline at 1-866-999-HALT (1-866-999-4258).

LICENSE FOR FOREIGN FILING UNDER

Title 35, United States Code, Section 184

Title 37, Code of Federal Regulations, 5.11 & 5.15

GRANTED

The applicant has been granted a license under 35 U.S.C. 184, if the phrase "IF REQUIRED, FOREIGN FILING LICENSE GRANTED" followed by a date appears on this form. Such licenses are issued in all applications where the conditions for issuance of a license have been met, regardless of whether or not a license may be required as set forth in 37 CFR 5.15. The scope and limitations of this license are set forth in 37 CFR 5.15(a) unless an earlier license has been issued under 37 CFR 5.15(b). The license is subject to revocation upon written notification. The date indicated is the effective date of the license, unless an earlier license of similar scope has been granted under 37 CFR 5.13 or 5.14.

This license is to be retained by the licensee and may be used at any time on or after the effective date thereof unless it is revoked. This license is automatically transferred to any related applications(s) filed under 37 CFR 1.53(d). This license is not retroactive.

The grant of a license does not in any way lessen the responsibility of a licensee for the security of the subject matter as imposed by any Government contract or the provisions of existing laws relating to espionage and the national security or the export of technical data. Licensees should apprise themselves of current regulations especially with respect to certain countries, of other agencies, particularly the Office of Defense Trade Controls, Department of State (with respect to Arms, Munitions and Implements of War (22 CFR 121-128)); the Bureau of Industry and Security, Department of Commerce (15 CFR parts 730-774); the Office of Foreign AssetsControl, Department of Treasury (31 CFR Parts 500+) and the Department of Energy.

NOT GRANTED

No license under 35 U.S.C. 184 has been granted at this time, if the phrase "IF REQUIRED, FOREIGN FILING LICENSE GRANTED" DOES NOT appear on this form. Applicant may still petition for a license under 37 CFR 5.12, if a license is desired before the expiration of 6 months from the filing date of the application. If 6 months has lapsed from the filing date of this application and the licensee has not received any indication of a secrecy order under 35 U.S.C. 181, the licensee may foreign file the application pursuant to 37 CFR 5.15(b).

SelectUSA

The United States represents the largest, most dynamic marketplace in the world and is an unparalleled location for business investment, innovation, and commercialization of new technologies. The U.S. offers tremendous resources and advantages for those who invest and manufacture goods here. Through SelectUSA, our nation works to promote and facilitate business investment. SelectUSA provides information assistance to the international investor community; serves as an ombudsman for existing and potential investors; advocates on behalf of U.S. cities, states, and regions competing for global investment; and counsels U.S. economic development organizations on investment attraction best practices. To learn more about why the United States is the best country in the world to develop technology, manufacture products, deliver services, and grow your business, visit http://www.SelectUSA.gov or call +1-202-482-6800.

PATENT APPLICATION FEE DETERMINATION RECORD

Substitute for Form PTO-875

Application or Docket Number
16/907,887

APPLICATION AS FILED - PART I

FOR	(Column 1) NUMBER FILED	(Column 2) NUMBER EXTRA	SMALL ENTITY RATE($)	SMALL ENTITY FEE($)	OR	OTHER THAN SMALL ENTITY RATE($)	OTHER THAN SMALL ENTITY FEE($)
BASIC FEE (37 CFR 1.16(a), (b), or (c))	N/A	N/A	N/A	75		N/A	
SEARCH FEE (37 CFR 1.16(k), (i), or (m))	N/A	N/A	N/A	330		N/A	
EXAMINATION FEE (37 CFR 1.16(o), (p), or (q))	N/A	N/A	N/A	380		N/A	
TOTAL CLAIMS (37 CFR 1.16(i))	12 minus 20 =	*	x 50 =	0.00	OR		
INDEPENDENT CLAIMS (37 CFR 1.16(h))	1 minus 3 =	*	x 230 =	0.00			
APPLICATION SIZE FEE (37 CFR 1.16(s))	If the specification and drawings exceed 100 sheets of paper, the application size fee due is $310 ($155 for small entity) for each additional 50 sheets or fraction thereof. See 35 U.S.C. 41(a)(1)(G) and 37 CFR 1.16(s).			0.00			
MULTIPLE DEPENDENT CLAIM PRESENT (37 CFR 1.16(j))				0.00			
* If the difference in column 1 is less than zero, enter "0" in column 2.			TOTAL	785		TOTAL	

APPLICATION AS AMENDED - PART II

		(Column 1) CLAIMS REMAINING AFTER AMENDMENT		(Column 2) HIGHEST NUMBER PREVIOUSLY PAID FOR	(Column 3) PRESENT EXTRA	SMALL ENTITY RATE($)	SMALL ENTITY ADDITIONAL FEE($)	OR	OTHER THAN SMALL ENTITY RATE($)	OTHER THAN SMALL ENTITY ADDITIONAL FEE($)
AMENDMENT A	Total (37 CFR 1.16(i))	*	Minus	**	=	x =		OR	x =	
AMENDMENT A	Independent (37 CFR 1.16(h))	*	Minus	***	=	x =		OR	x =	
AMENDMENT A	Application Size Fee (37 CFR 1.16(s))									
AMENDMENT A	FIRST PRESENTATION OF MULTIPLE DEPENDENT CLAIM (37 CFR 1.16(j))							OR		
						TOTAL ADD'L FEE		OR	TOTAL ADD'L FEE	

		(Column 1) CLAIMS REMAINING AFTER AMENDMENT		(Column 2) HIGHEST NUMBER PREVIOUSLY PAID FOR	(Column 3) PRESENT EXTRA	RATE($)	ADDITIONAL FEE($)		RATE($)	ADDITIONAL FEE($)
AMENDMENT B	Total (37 CFR 1.16(i))	*	Minus	**	=	x =		OR	x =	
AMENDMENT B	Independent (37 CFR 1.16(h))	*	Minus	***	=	x =		OR	x =	
AMENDMENT B	Application Size Fee (37 CFR 1.16(s))									
AMENDMENT B	FIRST PRESENTATION OF MULTIPLE DEPENDENT CLAIM (37 CFR 1.16(j))							OR		
						TOTAL ADD'L FEE		OR	TOTAL ADD'L FEE	

* If the entry in column 1 is less than the entry in column 2, write "0" in column 3.
** If the "Highest Number Previously Paid For" IN THIS SPACE is less than 20, enter "20".
*** If the "Highest Number Previously Paid For" IN THIS SPACE is less than 3, enter "3".
The "Highest Number Previously Paid For" (Total or Independent) is the highest found in the appropriate box in column 1.

United States Patent and Trademark Office

Office of the Chief Financial Officer

Document Code:WFEE

User :C43106

Sale Accounting Date:07/01/2020

Sale Item Reference Number	Effective Date
16907887	06/23/2020

Document Number	Fee Code	Fee Code Description	Amount Paid	Payment Method
I202071058551809	4011	UTILITY FILING FEE (ELECTRONIC FILING)	$75.00	Deposit Account
I202071058551809	2111	UTILITY SEARCH FEE	$330.00	Deposit Account
I202071058551809	2311	UTILITY EXAMINATION FEE	$380.00	Deposit Account
I202071058551809	2051	LATE FILING FEE FOR OATH OR DECLARATION	$80.00	Deposit Account

Electronic Acknowledgement Receipt

EFS ID:	39800333
Application Number:	16907887
International Application Number:	
Confirmation Number:	2653
Title of Invention:	Security Techniques for Device Assisted Services
First Named Inventor/Applicant Name:	Gregory G. Raleigh
Customer Number:	106963
Filer:	James E. Harris/Jennifer Smith
Filer Authorized By:	James E. Harris
Attorney Docket Number:	RALEP025C1C1C1C1
Receipt Date:	23-JUN-2020
Filing Date:	
Time Stamp:	13:34:54
Application Type:	Utility under 35 USC 111(a)

Payment information:

Submitted with Payment	no

File Listing:

Document Number	Document Description	File Name	File Size(Bytes)/ Message Digest	Multi Part /.zip	Pages (if appl.)
1	Preliminary Amendment	P025_PA.pdf	92396 b0bbd4f4b3cebc9a9be4fb73348c950bca34dead	no	4

Warnings:

Information:	
Total Files Size (in bytes):	92396

This Acknowledgement Receipt evidences receipt on the noted date by the USPTO of the indicated documents, characterized by the applicant, and including page counts, where applicable. It serves as evidence of receipt similar to a Post Card, as described in MPEP 503.

<u>New Applications Under 35 U.S.C. 111</u>
If a new application is being filed and the application includes the necessary components for a filing date (see 37 CFR 1.53(b)-(d) and MPEP 506), a Filing Receipt (37 CFR 1.54) will be issued in due course and the date shown on this Acknowledgement Receipt will establish the filing date of the application.
<u>National Stage of an International Application under 35 U.S.C. 371</u>
If a timely submission to enter the national stage of an international application is compliant with the conditions of 35 U.S.C. 371 and other applicable requirements a Form PCT/DO/EO/903 indicating acceptance of the application as a national stage submission under 35 U.S.C. 371 will be issued in addition to the Filing Receipt, in due course.
<u>New International Application Filed with the USPTO as a Receiving Office</u>
If a new international application is being filed and the international application includes the necessary components for an international filing date (see PCT Article 11 and MPEP 1810), a Notification of the International Application Number and of the International Filing Date (Form PCT/RO/105) will be issued in due course, subject to prescriptions concerning national security, and the date shown on this Acknowledgement Receipt will establish the international filing date of the application.

IN THE UNITED STATES PATENT AND TRADEMARK OFFICE

In re Application of:	Raleigh, Gregory	Examiner:	not yet assigned
Serial No.:	16/907,887	Art Unit:	
Filed:	June 22, 2020	Conf. No.:	2653
Title:	Security Techniques for Device Assisted Services		

Mail Stop Amendment
Commissioner for Patents
P.O. Box 1450
Alexandria, VA 22313-1450

PRELIMINARY AMENDMENT

Before examination in this case, please enter the following amendments and remarks:

Amendments to the Claims begins on page 2.

Remarks begin on page 4.

AMENDMENTS TO THE CLAIMS

1. (Canceled).

2. (New) A method of operating a wireless end-user device, the method comprising:

connecting from a secure modem subsystem to a wireless cellular network;

connecting a first secure control channel from the secure modem subsystem through the wireless cellular network to a network service controller;

connecting a second secure control channel from a secure execution environment, separately secure from the secure modem subsystem, through the secure modem subsystem and the wireless cellular network to the network service controller;

receiving at the secure execution environment via the second control channel one or more messages from the network service controller, the one or more messages comprising one or more service policy settings;

storing the one or more service policy settings in a secure memory partition accessible only from the secure execution environment; and

enforcing, at least in part from the secure execution environment, a network service profile comprising the one or more service policy settings, to control the wireless end-user device use of a service on the wireless cellular network.

3. (New) The method of claim 2, wherein the network service profile is associated with a service plan that provides for access to the service on the wireless network

4. (New) The method of claim 2, wherein the secure modem subsystem comprises a modem control link and a modem local channel, and the first secure control channel connects the modem control link to the network service controller through the modem local channel, and wherein the secure execution environment comprises a host service control link, the second secure control channel coupled to the host service control link, the modem local channel providing secure communication between the modem control link and the host service control link.

5. (New) The method of claim 2, wherein the secure modem subsystem further comprises a modem agent accessible only by the network service controller through the first control channel.

6. (New) The method of claim 5, wherein the modem agent comprises a service measurement point for use of the service.

7. (New) The method of claim 6, further comprising the modem agent communicating a report of the use of the service to the network service controller through the first control channel.

8. (New) The method of claim 7, further comprising the secure execution environment separately communicating a report of the monitored use of the service through the second control channel.

9. (New) The method of claim 2, wherein the one or more service policy settings include an access control setting, a traffic control setting, and/or an admission control setting.

10. (New) The method of claim 2, wherein the one or more service policy settings include a network or device management communication setting.

11. (New) The method of claim 2, wherein the secure execution environment is implemented at least in part as a hardware partition.

12. (New) The method of claim 2, wherein the secure execution environment is implemented at least in part as a software partition.

13. (New) The method of claim 2, wherein the secure execution environment is implemented at least in part in a virtual machine executed on a processor.

REMARKS

Applicant respectfully requests the entry of the amendments herein.

The Commissioner is authorized to charge any fee deficiency or credit any overpayment to Deposit Account 50-5876.

Respectfully submitted,

Date: June 23, 2020

By: /James E. Harris/

James E. Harris
Reg. No. 40,013
Patent Counsel
Headwater Research LLC
1011 Pruitt Place
Tyler, TX 75703
(903) 201-6212

CERTIFICATE OF ELECTRONIC TRANSMISSION

I hereby certify that this paper (along with any paper referred to as being attached or enclosed) is being filed electronically via EFS-Web addressed to the Commissioner for Patents on:

Date: June 23, 2020 By: /Jennifer Smith/
Jennifer Smith

SECURITY TECHNIQUES FOR DEVICE ASSISTED SERVICES

BACKGROUND OF THE INVENTION

[0001] With the advent of mass market digital communications, applications and content distribution, many access networks such as wireless networks, cable networks and DSL (Digital Subscriber Line) networks are pressed for user capacity, with, for example, EVDO (Evolution-Data Optimized), HSPA (High Speed Packet Access), LTE (Long Term Evolution), WiMax (Worldwide Interoperability for Microwave Access), DOCSIS, DSL, and Wi-Fi (Wireless Fidelity) becoming user capacity constrained. In the wireless case, although network capacity will increase with new higher capacity wireless radio access technologies, such as MIMO (Multiple-Input Multiple-Output), and with more frequency spectrum and cell splitting being deployed in the future, these capacity gains are likely to be less than what is required to meet growing digital networking demand.

[0002] Similarly, although wire line access networks, such as cable and DSL, can have higher average capacity per user compared to wireless, wire line user service consumption habits are trending toward very high bandwidth applications and content that can quickly consume the available capacity and degrade overall network service experience. Because some components of service provider costs go up with increasing bandwidth, this trend will also negatively impact service provider profits.

BRIEF DESCRIPTION OF THE DRAWINGS

[0003] Various embodiments of the invention are disclosed in the following detailed description and the accompanying drawings.

[0004] FIG. 1 illustrates a secure execution environment for device assisted services in accordance with some embodiments.

[0005] FIG. 2 illustrates another secure execution environment for device assisted services in accordance with some embodiments.

[0006] FIG. 3 illustrates another secure execution environment for device assisted services in accordance with some embodiments.

[0007] FIG. 4 illustrates another secure execution environment for device assisted services in accordance with some embodiments.

[0008] FIG. 5 illustrates another secure execution environment for device assisted services in accordance with some embodiments.

[0009] FIG. 6 illustrates another secure execution environment for device assisted services in accordance with some embodiments.

[0010] FIG. 7 illustrates another secure execution environment for device assisted services in accordance with some embodiments.

[0011] FIG. 8 illustrates another secure execution environment for device assisted services in accordance with some embodiments.

[0012] FIG. 9 illustrates another secure execution environment for device assisted services in accordance with some embodiments.

[0013] FIG. 10 illustrates another secure execution environment for device assisted services in accordance with some embodiments.

[0014] FIG. 11 illustrates another secure execution environment for device assisted services in accordance with some embodiments.

DETAILED DESCRIPTION

[0015] The invention can be implemented in numerous ways, including as a process; an apparatus; a system; a composition of matter; a computer program product embodied on a computer readable storage medium; and/or a processor, such as a processor configured to execute instructions stored on and/or provided by a memory coupled to the processor. In this specification, these implementations, or any other form that the invention may take, may be referred to as techniques. In general, the order of the steps of disclosed processes may be altered within the scope of the invention. Unless stated otherwise, a component such as a processor or a memory described as being configured to perform a task may be implemented as a general component that is temporarily configured to perform the task at a given time or a specific component that is manufactured to perform the task. As used herein, the term 'processor' refers to one or more devices, circuits, and/or processing cores configured to process data, such as computer program instructions.

[0016] A detailed description of one or more embodiments of the invention is provided below along with accompanying figures that illustrate the principles of the invention. The invention is described in connection with such embodiments, but the invention is not limited to any embodiment. The scope of the invention is limited only by the claims and the invention encompasses numerous alternatives, modifications and equivalents. Numerous specific details are set forth in the following description in order to provide a thorough understanding of the invention. These details are provided for the purpose of example and the invention may be practiced according to the claims without some or all of these specific details. For the purpose of clarity, technical material that is known in the technical fields related to the invention has not been described in detail so that the invention is not unnecessarily obscured.

[0017] In some embodiments, security techniques for device assisted services are provided. In some embodiments, secure service measurement and/or control execution partition techniques for device assisted services are provided. In some embodiments, a secure execution environment for device assisted services is provided. In some embodiments, a secure stack for device assisted services is provided. In some embodiments, a secure memory for device assisted services is provided. In some embodiments, a secure modem for device assisted services is

provided (e.g., providing a secure communication link between the modem/modem driver and a service processor and/or agent on the device, such as a communications device or an intermediate networking device). In some embodiments, one or more secure monitoring points for device assisted services are provided. In some embodiments, one or more secure monitoring points with verification for device assisted services are provided (e.g., a secured monitoring point can be provided in a modem, which communicates securely to a secured execution environment in a CPU/processor, which can then verify such service usage measures). In some embodiments, a secure bus for device assisted services is provided. In some embodiments, a secure execution environment in the CPU/processor for device assisted services is provided. In some embodiments, secure access to a secure execution environment(s) for device assisted services is provided (e.g., securing communication from a bottom of the stack, such as modem drivers, which require credentials to access the bus as controlled by a service processor or secure agent on the device, and in which the traffic on the bus is encrypted). In some embodiments, various secure execution environments for device assisted services are provided using various hardware partition techniques (e.g., secure memory, secure modems, secure memory partition(s) in the CPU/processor), as described herein.

[0018] In some embodiments, device assisted services (DAS) provide for one or more of device based service usage measurements, service usage policy implementation, service usage accounting, service usage control, and any of the other functions described in various embodiments that assist, replace, and/or augment network based functions. For example, various DAS embodiments perform one or more of the following: facilitate and control activation to one or more access service networks; measure access and/or service usage on one or more access networks; control access and/or service usage on one or more access networks; account for different types of service usage on one or more access networks; implement quality of service (QOS) controls, collect and report QOS traffic demand, aggregate multiple device QOS demand reports to asses a measure of overall network QOS demand, and/or facilitate QOS resource allocation; and/or facilitate roaming between access networks. There are many more functions and embodiments for DAS as described with respect to various embodiments.

[0019] In some embodiments, various program/functional elements that perform the functions to implement various DAS embodiments are referred to herein as DAS agents or

device assisted service agents, or in some embodiments, more specific terms are used to be more descriptive in specific examples. In some embodiments, device assisted service agent functions include service measurements and/or service measure recording and/or service measure reporting (e.g., to the service controller, the device, the user, or other device agents) and/or service measure synchronization (e.g., between device and network). In some embodiments, device assisted service agent functions include service usage controls and/or service usage control policy settings. In some embodiments, service usage controls include one or more of network authorization, network authentication, network admission, access control, service usage activity classification, allowing or disallowing one or more service usage activity and traffic shaping for one or more service usage activity.

[0020] In some embodiments, device assisted service agent functions include one or more of the following: reporting service usage to QOS control elements in the network, receiving QOS assignment from the network, reporting QOS assignments to the network, and/or communicating with QOS service reservation elements in the network. In some embodiments, device assisted service agent functions include one or more of implementing QOS service controls on the device based on one or more of the following criteria: fair queuing of service usage activities, differentiated QOS based on an assigned QOS hierarchy of service usage activities, service usage activity QOS assignments from the network for one or more service usage activities, service usage activity policy directives from the network for one or more service usage activities.

[0021] In some embodiments, a service control link is used for communication between the device assisted service agents and the service controller. In some embodiments, the service control link is a secure link (e.g., an encrypted communication link).

[0022] In some embodiments, the device assisted service agent functions include device assisted service system communication, measuring and/or recording and/or reporting and/or synchronizing service measures, observing communicating information for service control integrity, communicating information for service control policy instructions and/or settings, or updating device assisted software and/or agent settings.

[0023] In some embodiments, device assisted service on the device includes the following: service measurements, service controls, user interface and usage reporting, user policy options, accept policy instructions, protected execution partition provided to prevent hacking, malware, errors, and other security techniques. In some embodiments, device assisted service on the server includes one or more of the following: set policy, set configurations, install/update agents, check usage versus policy, check proper operation of agents, synchronize usage from network to device, and other verification techniques. For example, when errors in policy enforcement are detected, servers can perform actions to either further observe, quarantine, or suspend the device.

[0024] In some embodiments, a control server/control service network element receives service measures from the device. In some embodiments, the control server/control service network element receives service measures from the network. In some embodiments, the control server/control service network element sets policies and manages service across multiple networks (e.g., while one modem is shown in various figures, multiple modems can be employed for multiple networks with consistent service usage measures, service controls, QOS controls, UI (User Interface), user preferences, user usage reporting, and/or other settings/controls across different networks).

[0025] In some embodiments, traffic type refers to one or more of the following: best effort network traffic, real-time traffic (e.g., live voice such as VOIP, live video, etc.), streaming traffic, multi-cast traffic, uni-cast traffic, point to point traffic, file types, traffic associated with an application, real time traffic, traffic with an assigned priority, traffic without an assigned priority, and traffic for a certain network.

[0026] In some embodiments, service usage activity refers to a usage of service by a device. In some embodiments, service usage activity can be one or more of connection to an access network, connection to certain destinations, URLs or addresses on a network, connection to the network by one or more applications, transmission of certain types of traffic, a type of transaction based service, a type of advertising based services, or a combination of one or more of the following: an application type, a network destination/address/URL, a traffic type, and a transaction type.

[0027] In some embodiments, protection of the device assisted service agents/functional elements to protect the functions that perform the device assisted functions is provided with a protected execution partition on the CPU (Central Processor Unit), APU (Auxiliary Processor Unit), or another hardware based processor. For example, such hardware protected execution capabilities in the CPU, APU, or other processor can be combined in some embodiments with either OS software functions or other native mode software functions to create secure program execution partitions as described herein. In some embodiments, the term host is used to refer to the hardware and firmware and/or software system that executes the device applications and networking stack. In some embodiments, some of the device assisted service agents/functions are implemented in a modem execution partition environment.

[0028] FIG. 1 illustrates a secure execution environment 100 (e.g., for a communications device) for device assisted services in accordance with some embodiments. As shown in FIG. 1, the device execution environments include program/functional elements for a communications (e.g., a communications device can be an intermediate networking device, such as 3G/4G WWAN to WLAN bridges/routers/gateways, femto cells, DOCSIS modems, DSL modems, remote access/backup routers, and other intermediate network devices, or a mobile communications device, such as a mobile phone, a PDA, an eBook reader, a music device, an entertainment/gaming device, a computer, laptop, a netbook, a tablet, a home networking system, and/or any other mobile communications device) device that utilizes the modem subsystems #1 (125) through #N (127) to connect to one or more of the access networks #1 (136) through #N (138). In some embodiments, a communications device includes multiple program execution partitions. As shown in FIG. 1, four execution partitions are provided: an application execution partition 102 in which, for example, application programs execute, a kernel execution partition 112 in which, for example, the lower level drivers and basic low level OS programs execute, a protected device assisted service (DAS) execution partition 114 (also referred to as protected DAS partition) in which, in some embodiments, some or all of the device assisted service agents and/or functions execute, and a modem execution partition 124 in which, for example, the modem program elements execute and, in some embodiments, some or all of the device assisted service agents and/or functions execute. In some embodiments, each of these execution partitions are optimized for different software functions, each providing programs with the basic physical memory, data memory, CPU or APU or modem processor execution resources, high

level and/or low level OS, memory management, file storage, I/O device resources (e.g., user interface (UI), peripherals, etc.), network communications stack, other device resources, and/or other resources that are required or used for operation of the programs. The collection of these hardware and software resources for the CPU or APU is sometimes referred to herein with the term host.

[0029] As shown, FIG. 1 illustrates an application execution partition 102 and a kernel execution partition 112, which are shown as separate partitions within the device execution environments. For example, this separation is based on the manner in which "kernel programs" (e.g., drivers and network stack, etc.) are commonly supported as compared to "application programs" (e.g., browsers, word processors, user interfaces, etc.) within the context of several different popular operating systems (OS) (e.g., Windows, UNIX, Linux, MAC OS, certain mobile device OSs, certain embedded device OSs, etc.). In some embodiments, this functional separation is not required, and, in some embodiments, other functional separations are supported.

[0030] As shown in FIG. 1, protected device assisted service agents, such as the protected DAS partition device assisted service agents 110, execute in the protected DAS partition 114 while unprotected device assisted service agents and/or OS networking stack elements and applications (e.g., applications 106A through 106C) execute outside of the secure device assisted service execution partition 114, such as the application partition device assisted service agents 104 and the OS networking stack and/or kernel partition device assisted service agents 108. For example, the protected DAS partition 114 can make it more difficult for a hacker, malware or system errors to compromise, attack or modify the device assisted service measurements, service policy implementation or service usage control operations on the device (e.g., communications device). In some embodiments, the protected DAS partition 114 need not support open access to all programs and OS elements so that it can be easier to protect. Also, as shown, a bus driver 116 in the application execution partition 102 provides for communication with a modem bus 120, which is in communication with a bus driver 121 in the modem execution partition 124. The protected DAS partition also includes a host service control link 118, which facilitates communication with a host secure channel 150 as shown.

[0031] In some embodiments, the protected DAS partition 114 is a protected execution partition on the main device that is supported by certain configurations in the host (e.g., a secure virtual execution environment or a separate hardware security function). For example, this protected execution partition can be used to provide added service measurement integrity and/or service control integrity for a device assisted service enabled device. In some embodiments, as described herein, the operating system (OS) also performs a role in establishing the protected execution partition for secure operation of device assisted services, and, in some embodiments, this role is performed by native software or firmware operating on secure hardware elements.

[0032] In some embodiments, the DAS agents responsible for maintaining service control integrity execute in the protected DAS partition 114. For example, the protected DAS partition device assisted service agents 110 can include one or more of the following: one or more service usage measurement functions; some or all of the device networking stack functions that are monitored and/or controlled by the device assisted services system; device drivers that interface to an OS networking stack to observe or manipulate stack traffic; access control integrity functions; service policy control functions; service UI functions; application identification functions, and/or functions to classify service usage activities by combinations of application, address/URL and/or traffic type; modem bus driver functions; and/or modem data encryption functions to prevent other unauthorized programs from bypassing the device assisted service measurements and/or controls by directly accessing the modem around the stack. In some embodiments, the system designer or a given set of design criteria determine which of the various described device assisted agent functions should be executed in protected DAS partition 114 to strengthen the service control integrity for the system.

[0033] In some embodiments, the device operating system provides for the protected DAS partition 114 in addition to conventional security features available in the operating system. In some embodiments, the protected DAS partition 114 provides an execution partition with increased program execution protection in which, for example, service measurement and/or service control programs (agents) can execute in a mode that provides for higher access control integrity (e.g., proper service usage reporting and/or service measurement and/or service control system operation with increased protection from attacks, errors, malware, etc.). In some

embodiments, a hardware assisted secure execution partition provides for increased program execution protection for device assisted service agent functions.

[0034] In some embodiments, a service control link (e.g., host service control link 118 via host secure channel 150 to network service control link 152) is used for communication between the device assisted service agents and a service controller 122. In some embodiments, the service control link is a secure link (e.g., an encrypted communications link). In some embodiments, an encrypted secure control link can be implemented over the higher layers of the network stack (e.g., TCP, HTTP, TLS, etc.), and, in some embodiments, the encrypted link can be implemented over lower layers in the network stack, such as the IP layer or the access network layers (e.g., the WWAN device management channels or signaling layers). In some embodiments, service control link security is provided at least in part by encrypting link traffic between the device and the service controller 122. In some embodiments, service control link security is provided at least in part by running the service control link device side program agents in the protected DAS partition 114. In some embodiments, service control link security is achieved at least in part by restricting access to the service control link to certain device assisted service agents that are allowed to communicate with the service controller 122. In some embodiments, the agents that are allowed to communicate with the service control link perform such communications using encrypted communications. In some embodiments, the encrypted communications is accomplished with a secure inter-agent communication bus on the device. In some embodiments, the only mechanism for modifying the configuration of the operation, execution code, execution instructions and/or settings of certain device assisted service processor agents executing in the protected DAS partition 114 is through the service control link. In some embodiments, the only mechanism for modifying any program elements executing inside the protected DAS partition 114 is through the service control link so that only the service controller 122 may modify the operation or service policy settings for the agents located in the service measurement and/or service control execution partition.

[0035] As shown in FIG. 1, various server functions within the service controller 122 are provided. In some embodiments, a service history server 158 collects service usage measures from one or more of the device DAS agents and/or from various sources of potential network based service usage databases, such as the access network service usage 142 (e.g., carrier

charging data record (CDR) systems), private network service usage 144 (e.g., MVNO or enterprise network service usage accounting system), and/or billing, mediation service usage log, reconciliation 148 (e.g., service provider billing or mediation system). In some embodiments, an access control integrity server 156 is used to compare various access control verification checks to ensure that the device assisted service agents have not been compromised. The various embodiments used in the access control integrity server 156 to perform these integrity checks are described with respect to various embodiments. Some embodiments include comparing device based service usage measures versus the service usage that should result if the desired service policy were properly implemented, comparing device based service usage measures versus the service usage that should result if the desired service policy were properly implemented with device based service usage measures that are executing in the protected DAS partition 114 and/or the modem execution partition 124, comparing network based service usage measures versus the service usage that should result if the desired service policy were properly implemented, and comparing network based service usage measures with device based service usage measures. In some embodiments, a policy control server 154 stores policy settings for the various service plans that can be implemented on the device, and communicates the appropriate policy settings to the appropriate device DAS agents.

[0036] In some embodiments, the service controller 122 has secure access to service measures, service control settings, software images, software security state(s), and/or other settings/functions, for example, by virtue of the hardware enhanced execution partition and the secure channel into the protected DAS partition 114. For example, the host secure channel 150 can be encrypted employing keys that are public/private or point to point private. Also, other link security, for example, can be implemented as described herein. For example, servers can ensure that the link remains authenticated and information is validated. For example, the service controller can perform one or more of the following verification techniques: compare the monitored service usage versus the policy, compare the monitored service usage versus other service usage measures and/or combined with various other network service usage measures.

[0037] In some embodiments, the protected DAS partition 114 includes a host service control link 118 as shown in FIG. 1 that works in combination, that is, in communication with a network service control link 152 to send and receive secure messages between the service

controller and the host via a host secure channel 150. In some embodiments, the protected DAS partition 114 only accepts new program images from the service controller 122 and not from local programs or disks. In some embodiments, the protected DAS partition 114 cannot communicate with other applications and/or kernel programs. In some embodiments, the protected DAS partition 114 can also communicate with other applications and/or kernel programs but only to gather information or to set settings. In some embodiments, the protected DAS partition 114 can also communicate with other applications and/or kernel programs but only through a restricted encrypted communication bus that restricts outside program access to protected programs or agent functions, and can also restrict the agents inside of the protected partition from accepting unauthorized information or code modifications from programs outside the protected partition. Various other security techniques can be provided for the DAS execution environments as will be apparent to one of ordinary skill in the art in view of the embodiments described herein.

[0038] In some embodiments, the protected DAS partition 114 is created by employing CPU or APU hardware security features in addition to or in alternative to other software security features (e.g., virtual execution partitions) that can be provided by the operating system and/or other software. In some embodiments, the host hardware security features are provided with the operating system secure kernel operating modes. In some embodiments, the host hardware security features used for secure device assisted service execution partition operation are independent of the operating system kernel (e.g., implemented in secure program partitions in a separate secure program area not directly controlled by the OS and/or software that does not have access to the partitions).

[0039] In some embodiments, the hardware security features that support the protected DAS partition 114 include preventing other elements on the device from writing and/or reading certain memory areas reserved for device assisted service agents and/or control link functions. In some embodiments, this memory protection function is accomplished by locating the memory in a secure hardware partition that cannot be accessed by unauthorized device program elements (e.g., a separate bank of isolated memory space within the host CPU). In some embodiments, this memory protection function includes encrypting traffic to and from memory so that only authorized device program elements posses the counterpart encryption capability to access the

memory. In some embodiments, the mechanism to access device assisted service agent memory and/or certain data elements is restricted to authorized device assisted service agents and/or the service controller via the service control link so that unauthorized program elements on the device cannot alter the device assisted service agent code and/or operation.

[0040] In some embodiments, the hardware security features that support the protected DAS partition 114 includes preventing unauthorized elements on the device from accessing the protected storage and/or file storage (e.g., "protected storage," such as disk storage, non-volatile memory, embedded non-volatile memory, such as NVRAM, flash or NVROM, securely embedded non-volatile memory, and/or other types of storage) that is used to store the device assisted service agent programs. In some embodiments, this protected storage is maintained within the secure hardware partitions that also execute one or more of the device assisted service agents so that only authorized device assisted service agents have access to the storage locations. In some embodiments, the images that are stored in such protected file storage must be properly encrypted and signed for a boot loader to authorize loading the device assisted service agent programs into execution memory, and in some embodiments, if the images are not properly signed then an access control integrity error is generated and/or the program is not loaded. In some embodiments, such properly signed DAS images can only be obtained from the service controller. In some embodiments, such DAS images can only be loaded into protected file storage by the service controller. In some embodiments, the hardware security features that prevent unauthorized elements on the device from accessing the protected file storage include encrypting all traffic to and from the secure storage so that only authorized device program elements possess the counterpart encryption capability to access the storage. In some embodiments, access or access rights to re-program a device assisted service agent program store is restricted to the service controller via the service control link so that unauthorized program elements on the device are not authorized to alter the device assisted service agent code and/or operation.

[0041] In some embodiments, the hardware security features that protect device assisted service agent storage include a protected DAS partition in which an access control integrity agent function is isolated from other device program elements, and a secure service control link is also isolated in a similar manner, and the access control integrity agent scans the execution memory,

data memory and/or file storage used by one or more device assisted services agents to measure and/or control services. In some embodiments, the purpose of the scan is to detect changes to the device assisted service agent code and/or data. In some embodiments, the purpose of the scan is to detect other unauthorized program elements or data that may be present in reserved or protected areas used for device assisted service agent execution. In some embodiments, reports of such scan audits are reported over the service control link to the service controller for further processing by use of cloud based resources to identify access control integrity violations. In some embodiments, the access control integrity agent functions include one or more of hashing other device assisted security agents, querying other device assisted security agents, observing the operation of other device assisted security agents or monitoring service measures and then either evaluating the results locally on the device to determine if they are within pre-defined allowable parameters or sending at least some of the results to the service controller for further analysis via the service control link. In some embodiments, the scan audits are compared with earlier versions of the scans to compare code configuration or operational characteristics. In some embodiments, the scan audits are compared against known databases for the code or operational characteristics that should be present in the DAS agents.

[0042] In some embodiments, an access control integrity agent, or a new version of the access control integrity agent can be downloaded by the service controller over the secure service control link. For example, this technique provides for a real time assessment of device service control security state as described above in the event that corruption or compromise of the secure device assisted service agent(s) has occurred. In some embodiments, the access control integrity agent that is downloaded can have a different configuration and/or operation than any agent previously loaded onto the device so that it is difficult or impossible for a hacker or malware to spoof the operation of the agent in a short period of time. For example, by requiring the agent to report security assessments back to the server in a period of time that is typically less than what is required to spoof the agent, the agent will either report back an accurate assessment of device status or will be blocked by a hacker or malware, and both of these conditions can provide the information required to take action if the device assisted services system has been corrupted or compromised.

[0043] In some embodiments, the protected DAS partition and/or the modem execution partition can be used to securely store some or all of the device credentials that are used for one or more of device group association, activation, authorization to the access network and/or the DAS network, service level, and service usage accounting and/or billing.

[0044] In some embodiments, the modem subsystem also includes DAS elements that strengthen the access control integrity of the DAS system. As shown in FIG. 1, one or more modems can include, in some embodiments, DAS agent functions labeled modem partition DAS agents 126. The modem execution partition 124 of the modem sub system #1 (125) of the modem execution partition 124 includes modem partition DAS agents 126 in communication (e.g., secure communication, such as using encrypted communications) with a modem 128 and a modem service control link 130, which is in communication with the network service control link 152 via the modem secure channel #1 (132), as shown. Also, the modem 128 is in communication (e.g., secure communication, such as using encrypted communications) with the access network #1 (136), which is in communication with the access network service usage 142 and the Internet 140, which is in communication with a private network 146, which is in communication with the private network service usage 144, as shown.

[0045] Example embodiments for DAS agent functions that execute in the modem execution partition include modem encryption and modem service usage measures. In other embodiments, the modem execution partition can also include higher level DAS agent functions, such as stack traffic classification, stack manipulation, access control, and/or traffic control. For example, the modem execution partition can also include a full service processor that is fully capable of managing all aspects of service usage measurement and/or service control. It will now be apparent to one of ordinary skill in the art that the modem execution partition can employ a number of the service security embodiments described in the context of the protected DAS partition, for example, to enhance the service integrity of the DAS system. For example, the DAS agents on the modem can be stored in an encrypted and signed format on non-volatile (NV) memory on the modem that is only accessible by the network service control link or by a local secure control link from the protected DAS partition to the modem execution partition. As shown in FIG. 1, a separate secure modem control channel (e.g., modem secure channel #1 (132) through modem secure channel #N (134)) that is distinct from the host secure control channel

150 is provided. This separate modem control channel can either be implemented over the higher network layers of the device or over the lower access network layer so that special access to access network resources is required to even connect to the modem DAS agents 126 thereby further enhancing service control related security.

[0046] In some embodiments, the protected DAS partition provides for performing the DAS agent functions required for parental controls, enterprise WWAN management controls or roaming controls, and/or usage reporting in the protected execution space. In view of the DAS embodiments described herein, it will now be apparent to one of ordinary skill in the art how to implement such protected controls for these various and other application scenarios.

[0047] In some embodiments, a protected DAS partition provides for performing a virtual machine (VM) on top of a secure machine. The device application OS that is accessible by software that can be installed without special permissions can be isolated from the secure hardware and/or OS that is running under the VM. Using these techniques, malware can be "cocooned in" on the VM OS rather than "walled out" as discussed with respect to various embodiments described herein.

[0048] In some embodiments, communication between program/functional elements outside of the protected DAS partition to DAS agents inside the protected DAS partition is controlled by a secure encrypted channel. In some embodiments, only programs/functions that have access to communicate with DAS agents are allowed to do so, and, in some embodiments, even these outside programs are not allowed to modify the DAS agent configuration, only to report information and/or receive information.

[0049] For example, various embodiments can be used to connect to multiple access networks through multiple modems, with each modem potentially being associated with a different set of DAS service policies corresponding to the different types of access networks supported. In some embodiments, such as for 3G/4G modems, WWAN/WLAN modems, and various other multiple modem embodiments, the multiple modems can also be provided on the same multi-mode modem subsystem rather than on different modem subsystems.

[0050] In some embodiments, the various techniques and embodiments described herein can be readily applied to intermediate networking devices as will now be apparent to one of ordinary skill in the art. For example, an intermediate networking device can includes some or all of the DAS agents for managing, controlling, and/or measuring service usage for one or more devices in communication with a wireless network via the intermediate networking device, in which the DAS agents can be executed in secure execution environments or secure execution partitions using the various techniques described herein. In some embodiments, intermediate networking devices include, for example, WWAN/WLAN bridges, routers and gateways, cell phones with WWAN/WLAN or WWAN/Bluetooth, WWAN/LAN or WWAN/WPAN capabilities, femto cells, back up cards for wired access routers, and other forms/types of intermediate networking devices.

[0051] FIG. 2 illustrates another secure execution environment 200 for device assisted services in accordance with some embodiments. In particular, FIG. 2 illustrates an embodiment in which DAS agents do not actually replace the OS network stack elements, but instead one or more DAS agents include device driver programs that interface into the network stack and pass (e.g., securely communicate) traffic information or actual traffic back and forth with the stack. These device driver interface constructs are labeled OS driver framework and interface 208 as shown in FIG. 2. Example OS system constructs that provide for this type of architecture for DAS agents include Windows NDIS and/or TDI drivers, Windows Filter Platform (WFP), Berkeley Packet Filter, ipfw (e.g., a BSD packet filter that can be used for various OSs, such as Unix, Linux, MAC OS), and/or other platforms/programs performing these or similar functions. While these OS stack options are not secure in themselves, if the drivers that interface with them are secured as illustrated in FIG. 2 by executing the drivers in the protected DAS partition 214, then higher overall access control integrity/security levels can be achieved.

[0052] As shown in FIG. 2, the service measurement and/or policy control drivers 210 executed in the protected DAS partition 214 represent the DAS drivers that interface to the OS stack device driver interface constructs labeled OS driver framework and interface 208 executed in the kernel execution partition 212, which are in communication with/interface with OS Stack API(s) 207. As also shown, applications, such as applications 106A through 106C execute in the application execution partition 202. In some embodiments, service access control integrity is

further enhanced by placing additional measurement points outside of the network stack, so that, for example, if the network stack service usage reporting is hacked, corrupted, and/or compromised, there is a secure additional or back-up service measure located on the device and/or in the network (e.g., modem agent 226 as shown in FIG. 2, which provides a service measurement point in the modem for measuring service usage by the device, and as shown also provides for secure communication with the modem agent 226 using modem encryption 225). For example, the service measure provided by the modem agent 226, modem encryption 225, and/or modem bus 120 functions shown in FIG. 2 can be executed in a protected partition (e.g., modem execution partition 124 as shown in FIG. 2 can be implemented as a secure or protected partition using the various techniques described herein).

[0053] FIG. 3 illustrates another secure execution environment 300 for device assisted services in accordance with some embodiments. As shown, some stack elements are executed in the kernel execution partition 312 and some stack elements are executed in the protected DAS execution partition 314. In some embodiments, the DAS agents 104 executed in the application execution partition 302 are directly monitoring and/or controlling stack traffic by intercepting it and imposing additional traffic measurement and/or filtering. Examples of such techniques are described herein with respect to various embodiments. As shown in FIG. 3, the network stack elements 308 are the OS stack elements that reside in the kernel execution partition 312 and the protected DAS network stack elements 310 are the stack elements that reside in protected DAS execution partition 314. For example, as some or potentially all of the stack network traffic processing resides in the protected DAS execution partition 314, a high level of service control integrity can be maintained using these techniques. For example, the modem bus driver 121 can be executed in a secure execution partition, such as modem execution partition 324, which can be implemented as a secure execution partition using the various techniques described herein, or the modem bus driver 121 can be executed in the protected DAS execution partition 314, so that unauthorized programs can be blocked from accessing the access network through the modem.

[0054] In some embodiments, the entire stack is executed in the protected DAS execution partition 314 with only a stack API executing in kernel execution partition 312. Various other embodiments involve implementing a minimum (e.g., in terms of a number of agents and/or functionality) in the protected DAS execution partition 314 required to secure a service measure

that can be used to confirm the integrity of the service policy implementation (e.g., as described with respect to various other embodiments disclosed herein). As will now be apparent to one of ordinary skill in the art, various combinations of stack processing functions can be implemented in a secure host execution partition to strengthen the service measurement and/or service control integrity of the DAS system using the techniques and/or similar techniques to the various techniques described herein.

[0055] In some embodiments, the stack elements implemented in the protected DAS execution partition can include stack API, sockets layer, TCP, UDP, service measurements at one or more points in the stack, IP layer processing, VPN/IPSEC, PPP, access control, traffic classification, traffic queuing, traffic routing, traffic QOS, traffic demand reporting to QOS allocation servers, traffic statistics reporting to the QOS servers, traffic QOS reservation requests including by traffic type or app type or service priority to the servers, traffic throttling, traffic statistics gathering, traffic QOS priority identification, modem drivers, modem data encryption, and/or other stack element functionality or features.

[0056] In some embodiments, the above discussed service control mechanisms are controlled by policy commands received over the service control link from the servers or other authorized network elements. In some embodiments, the device also reports usage measures to servers or other authorized network elements. In some embodiments, the device also reports QOS demand to the servers or other authorized network elements and/or accepts QOS instructions from the servers or other authorized network elements. In some embodiments, the device reports traffic statistics, projected traffic demand, application usage, projected QOS demand can all be reported to the servers or other authorized network elements for the purpose of provisioning the right amount of data bandwidth and traffic priority to the device, and the servers or other authorized network elements aggregate such reports from many different devices to project needed allocations across the entire network and make global bearer channel level or base station level decisions bearer channel allocation and bearer channel QOS allocation decisions, which can also be tied into a bearer channel provisioning, or bearer channel QOS provisioning apparatus or other authorized network elements located in the access network.

[0057] For example, as will now be apparent to one of ordinary skill in the art in view of the various embodiments described herein, additional security measures, can be added in some embodiments to augment the secure service partitioning, including, for example, access control integrity checks. For example, in addition to the service control policy instructions that can be received from the servers or other authorized network elements, an intermediate policy control agent can be present to make additional higher level decisions on how instantaneous policy should be implemented.

[0058] As shown in FIG. 3, the modem control link, shown as modem local channel 330, provides a link from local connection to the host service control link 118, which in turn connects through the host secure channel 150 to the service controller 152. This communication channel can also be implemented or configured to provide for encrypted communication and, in some embodiments, can be used as an alternative to the direct connection from the modem service control link to the network service control link as disclosed with respect to other figures and various embodiments as described herein.

[0059] As shown in FIG. 3, the final stack elements that feed or communicate with the modem bus driver 121 are the protected DAS network stack elements 310 located in the protected DAS execution partition 314 (illustrated as a solid line in FIG. 3), or, in some embodiments, can be the network stack elements 308 located in the kernel execution partition 312 (illustrated as a dashed line in FIG. 3). In some embodiments, these final stack elements feed or communicate with the modem subsystem 125. In some embodiments, the modem subsystem 125 includes an encrypted link so that the stack elements 310 in the protected DAS execution partition 314 can communicate with the modem 128 but other software programs or hardware elements cannot, for example, thereby preventing the service measures and/or controls from being inappropriately bypassed or otherwise comprised. For example and as similarly discussed above, the modem subsystem 125, for example, can include its own the protected execution partition using various techniques described herein. The modem protected execution partition, for example, can also include a service measure (e.g., modem agent 226 can provide such a service measurement point in the modem subsystem 125, as similarly described above with respect to FIG. 2) to increase service control integrity verification as depicted by service measure. The modem service measure can be included in protected execution partition that can

only be accessed by the service controller 122 by way of the modem local channel 330, or the modem service measure can only be accessed by another DAS agent 310 in protected execution partition 314. In some embodiments, the modem local channel 330 is implemented as a secure channel (e.g., an encrypted communication channel between the modem service control link 130 and the host service control link 118). As described herein, the modem driver can reside in protected service execution environment, or the modem traffic can be encrypted within service execution environment. For example, the encryption settings can be controlled by various secure control servers.

[0060] FIG. 4 illustrates another secure execution environment 400 for device assisted services in accordance with some embodiments. In particular, FIG. 4 illustrates a direct stack manipulation option performed by the DAS agents executed in the protected DAS execution partition 414, including, as shown, an app(lication) identify agent 420, an access control integrity agent 422, a policy control agent 424, a policy implementation agent 426, a service measure/service monitoring agent 428, a modem encryption agent 430, and a bus driver 432. For example, the policy implementation agent 426 performs access control and/or traffic shaping according a set of service control policies. The service control policies, for example, can be set by the service controller 122 or by the service controller 122 in coordination with the policy control agent 422. As shown the app identify agent 420 is in communication with the various applications 106A through 106C executed in the application execution partition 402. As also shown, the various applications 106A through 106C executed in the application execution partition 402 are in communication with the OS stack and/or stack API(s) 408 executed in the kernel execution partition 412.

[0061] In some embodiments, the protected service measure agent 428, the modem encryption agent 430, the modem driver agent 432, the application identifier agent 420, the access control integrity agent 422, and the policy control agent 424 are all implemented in protected DAS partition 414, as shown. In some embodiments, as will now be apparent to one of ordinary skill in the art, a subset of these functions can be implemented in a protected execution partition, such as the protected DAS partition, in various circumstances.

[0062] FIG. 4 also similarly shows various embodiments that are available for network based service usage measures and interfacing to the mediation and billing systems, and it should be understood that any or all of the embodiments and figures can be employed in the context of carrier networks, MVNOs, private networks, or open networks supporting enterprise IT manger controls, parental controls, multi-network controls, and/or roaming controls.

[0063] FIG. 5 illustrates another secure execution environment 500 for device assisted services in accordance with some embodiments. In particular, FIG. 5 is similar to that FIG. 4 except that FIG. 5 illustrates a modem service control link 132 that is connected directly to the service controller 122 via the network service control link 152 (e.g., via a modem secure channel). In some embodiments, a modem control link for DAS is established locally on the device or through an entirely different control channel, which, in some embodiments, provides enhanced security as discussed herein (e.g., it is very difficult to hack a service usage measure or service control that cannot be accessed on the device).

[0064] FIG. 6 illustrates another secure execution environment 600 for device assisted services in accordance with some embodiments. In particular, FIG. 6 illustrates a policy implementation agent 616 that includes the entire networking stack running in protected execution partition 614 and an OS stack API 608 that includes an application identifying function 620 in the kernel execution partition 612.

[0065] FIG. 7 illustrates another secure execution environment 700 for device assisted services in accordance with some embodiments. In particular, FIG. 7 illustrates DAS agents that do not replace the OS network stack elements, but instead one or more DAS agents are comprised of device driver programs that interface into the network stack and pass traffic information or actual traffic back and forth with the stack. These device driver interface constructs are labeled OS driver framework and interface 722 in FIG. 7 as similarly shown in and described with respect to FIG. 2, along with OS stack API 708, which includes application identifier function 720 as similarly discussed above with respect to FIG. 6, and are executed in kernel execution partition 712. Also, as shown, application partition DAS agents 104 are executed in application execution partition 702. The main difference between the embodiment in FIG. 7 and that shown in and described with respect to FIG. 2 is that the service measure agent

428, modem encryption agent 430, and modem driver agent 432 are executed in the protected DAS partition 714, as shown in FIG. 7. For example, this provides for enhanced service control security as described herein with respect to various embodiments.

[0066] FIG. 8 illustrates another secure execution environment 800 for device assisted services in accordance with some embodiments. In particular, FIG. 8 illustrates a more simplified embodiment that is similar to that of FIG. 7. In FIG. 8, only an access control integrity agent 422 and a service measure 428 are executed in protected DAS partition 814, and the bus driver 432 and the service measurement and/or policy control drivers 210 are executed in the kernel execution partition 712. This embodiment illustrates that provided that at least one protected service measure is provided on the device, then the DAS service control integrity can be very high. For example, if it is not possible to access the program code or control traffic for the service measure agent 428, and the host service control link 118 except through the encrypted control channel from the service controller 122, then this simplified configuration can be almost as secure as that possible with network based service measures. It will now be apparent to one of ordinary skill in the art that this technique similarly applies to a service measure and control link similarly implemented in a protected modem execution partition 324. In some embodiments, the access control integrity agent 422 provides additional security, for example, in the event that the protected DAS partition 814 is breached or compromised.

[0067] FIG. 9 illustrates another secure execution environment 900 for device assisted services in accordance with some embodiments. In particular, FIG. 9 illustrates an embodiment similar to that of FIG. 8 except that, in particular, in addition to the service measure being executed in protected DAS partition 914, the modem encryption agent 430 is also implemented in/executed in the protected DAS partition 914. For example, this prevents unauthorized software from defeating the service measurements and/or service controls by going around the network stack directly to the modem.

[0068] FIG. 10 illustrates another secure execution environment 1000 for device assisted services in accordance with some embodiments. In particular, FIG. 10 illustrates an embodiment similar to that of FIG. 9 except that, in particular, there are additional app partition DAS agents 104 executing in the application execution partition 702. For example, this illustrates that some

DAS agents can be implemented in application space (e.g., UI agent, policy control agent, and various other DAS agents as described herein) while still maintaining a high level of service measurement and/or control security as long as there are a few key measures and/or controls implemented in protected execution partitions using the various techniques described herein.

[0069] FIG. 11 illustrates another secure execution environment 1100 for device assisted services in accordance with some embodiments. In particular, FIG. 11 illustrates how the server cloud can be assisted by the on board access control integrity agent to detect tampering with other service measurement(s) and/or control agent(s), or to protect the service measurement and/or control system from being attacked by malware and/or otherwise comprised. As shown, the access control integrity agent 422 executes inside the protected DAS partition 1114 and is in communication with file storage 1130 (e.g., for persistently maintaining device status and/or other settings or status or monitoring information). The access control integrity agent 422 performs the various access control integrity check functions as, for example, described herein with respect to various embodiments, and, in some embodiments, in coordination with the servers over the secure control channel (e.g., host secure channel 150). In some embodiments, the access control integrity agent 422 can send the service controller 122 information about the other service measurements and/or control agents so that the service controller 122 can determine if the agents are working properly or have been tampered with or otherwise compromised. For example, such information can include sections of code, hashes, code segments, code variations from a previous image, code variations from a historical image, responses to queries, checksums, observations of operating behavior or patterns, service usage, policy implementation behavior, and/or other information that may be indicative of tampering, corruption, and/or a compromise of any of the device agents/measures. In some embodiments, the access control integrity agent 422 checks the operating environment for signs of malware signatures, or sends application and/or driver information or other information about the operating environments to the servers for further processing to detect malware. In some embodiments, the access control integrity agent 422 performs basic operations on protected DAS partition memory, kernel execution partition memory areas, application execution partition memory areas, on disk storage areas or on other file storage areas to detect known malware hashes or signatures, etc., or the access control integrity agent 422 can send the hashes to the

servers for comparison against malware databases (e.g., to compare against signatures for known malware or for further behavioral based or other security/malware detection techniques).

[0070] In some embodiments, the DAS system is implemented in a manner that is robust to losses in service control link (e.g., coverage outages on a WWAN link or loss of connection on a wired link). In some embodiments, the DAS system to be implemented in a manner that is robust to one or more server elements in the service controller going offline or failing for any reason. The following embodiments facilitate these techniques, as described below.

[0071] In some embodiments, it is advantageous for one or more of the device assisted service agents to maintain a record of the service usage reports and/or other reporting that is provided to the service controller regarding device service control state (e.g., present service plan settings, current service usage policy settings, current user preference settings, current DAS settings, current encrypted control channel and/or local encrypted communication channel key information, current DAS agent status reports, current DAS agent security state reports, current ambient service usage and/or transaction records, current service control integrity threat reports, user status information, device status information, application status information, device location, device QOS state, and/or other state and/or settings information). In addition to such information that exists on the device and is reported to the service controller, additional service information can be derived and recorded in the service controller, such as information received from outside the device and/or analysis of the device reported information (e.g., network based service usage measures, analysis of device service usage, comparison of device reports with other information, analysis of access control integrity agent reports, information received from roaming networks, information input to the service controller from parental control terminals, enterprise control terminals, virtual service provider control terminals, access network authorization information, service integrity violation level, and many other types of information used to properly measure and/or control the device services). For example, the information reported from the device and received or derived outside the device that is required to adequately define the actions needed from the service controller to maintain proper DAS system operation is sometimes referred to herein as the "device service state."

[0072] In some embodiments, the service controller functions are highly scalable and can be executed on a number of hardware and software platforms (e.g., different virtual machines in a server, different servers in a data center, or different servers located in different data centers). For example, in such embodiments the service controller can be designed so that the programs that execute the various service controller server functions can derive all of the information necessary to properly manage the device at any moment in time by knowing past device service state and current service state that adequately define the next set of actions the service controller needs to implement to properly maintain the DAS system operation. By designing the system in this way, if the server that is running the service controller server functions for any given device in question were to go down or become disconnected from the device, then another server could later resume proper operation of the DAS system by assigning another service controller server function to the device and recovering or restoring the necessary past device service state and the necessary current device service state.

[0073] For example, this can be accomplished in some embodiments as described below. The service controller saves the current device service state into a common database (e.g., which can be centralized or distributed) that is available to all service controller server functions. The device service state is saved each time the device communicates with the service controller, or at regular time intervals, or a combination of both. The device retains its current and past service state reports even after they are reported at least until the service controller sends the device a message confirming that the service controller has saved a given device service state. Once the device receives this save confirmation for a given device state report then it is no longer required to retain that particular device state report once the device has no further use for it. In this manner, if a service controller server function goes down then a save confirmation for one or more reported device states is not transmitted to the device by the service controller, and the device can retain that report. A server load balancer detects that a given service controller server function has gone down, looks up the devices that were being controlled by that service controller server function, finds that the device in question was one of those devices and re-assigns a new service controller server function (either in the same data center or in another data center) to control the device in question. The newly assigned service controller server function then recovers all past device states that were recorded in the service controller database and are required to properly manage the DAS system, and then asks the device to transmit or re-transmit

all device state reports that were not saved in the service controller database. Once the device transmits or re-transmits the requested information, the newly assigned service controller function then has the information it needs to properly manage the DAS system, it saves all the reported device state information, and then sends save confirmations to the device so that the device need no longer retain the older service state reports. The newly assigned service controller server function can then resume the DAS system operation with a set of actions that are identical or very similar to the actions that would have been taken by the original service controller server function if it had not gone down. One of ordinary skill in the art will now appreciate that the above techniques can also be used to accommodate temporary losses in the connection between the device and the service controller. For example, such techniques provide for a highly scalable and robust approach to implement a distributed service controller across multiple data centers for reliable service redundancy. In some embodiments, the past device service state information is saved in the protected DAS execution partition and/or the modem execution partition, for example, so that it is protected from corruption.

[0074] Although the foregoing embodiments have been described in some detail for purposes of clarity of understanding, the invention is not limited to the details provided. There are many alternative ways of implementing the invention. The disclosed embodiments are illustrative and not restrictive.

INCORPORATION BY REFERENCE

[0075] This application incorporates the following provisional and nonprovisional U.S. patent applications by reference: Application No. 12/694,445, filed January 27, 2010, entitled SECURITY TECHNIQUES FOR DEVICE ASSISTED SERVICES; Application No. 12/380,780, filed March 2, 2009, entitled AUTOMATED DEVICE PROVISIONING AND ACTIVATION; Application No. 61/206,354, filed January 28, 2009, entitled SERVICES POLICY COMMUNICATION SYSTEM AND METHOD; provisional Application No. 61/206,944, filed February 4, 2009, entitled SERVICES POLICY COMMUNICATION SYSTEM AND METHOD; provisional Application No. 61/207,393, filed February 10, 2009, entitled SERVICES POLICY COMMUNICATION SYSTEM AND METHOD; provisional Application No. 61/207,739, filed February 13, 2009, entitled SERVICES POLICY

COMMUNICATION SYSTEM AND METHOD; and provisional Application No. 61/252,151, filed on October 15, 2009, entitled SECURITY TECHNIQUES FOR DEVICE ASSISTED SERVICES.

[0076] WHAT IS CLAIMED IS:

CLAIMS

1. A system, comprising:

a processor of a communications device configured to:

implement a service profile executed at least in part in a secure execution environment for assisting control of the communications device use of a service on a wireless network, wherein the service profile includes a plurality of service policy settings, and wherein the service profile is associated with a service plan that provides for access to the service on the wireless network;

monitor use of the service based on the service profile; and

verify the use of the service based on the monitored use of the service;

a memory of the communications device coupled to the processor and configured to provide the processor with instructions.

ABSTRACT

Security techniques for device assisted services are provided. In some embodiments, secure service measurement and/or control execution partition is provided. In some embodiments, implementing a service profile executed at least in part in a secure execution environment of a processor of a communications device for assisting control of the communications device use of a service on a wireless network, in which the service profile includes a plurality of service policy settings, and wherein the service profile is associated with a service plan that provides for access to the service on the wireless network; monitoring use of the service based on the service profile; and verifying the use of the service based on the monitored use of the service.

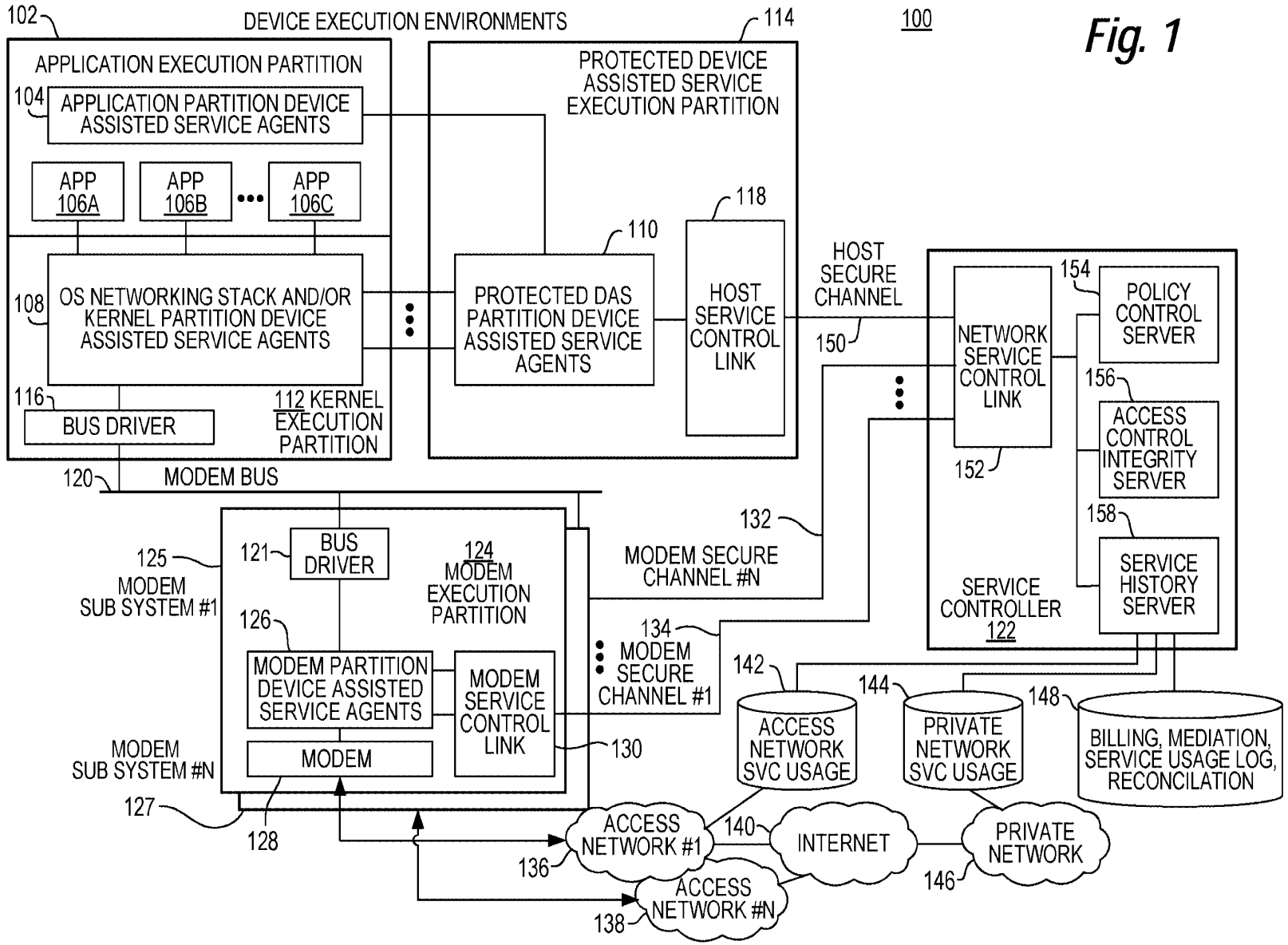
100
DEVICE EXECUTION ENVIRONMENTS
102
APPLICATION EXECUTION PARTITION
104
APPLICATION PARTITION DEVICE ASSISTED SERVICE AGENTS
APP 106A
APP 106B
APP 106C
108
OS NETWORKING STACK AND/OR KERNEL PARTITION DEVICE ASSISTED SERVICE AGENTS
116
BUS DRIVER
112 KERNEL EXECUTION PARTITION
114
PROTECTED DEVICE ASSISTED SERVICE EXECUTION PARTITION
110
PROTECTED DAS PARTITION DEVICE ASSISTED SERVICE AGENTS
118
HOST SERVICE CONTROL LINK
HOST SECURE CHANNEL
150
154
POLICY CONTROL SERVER
NETWORK SERVICE CONTROL LINK
156
ACCESS CONTROL INTEGRITY SERVER
152
158
SERVICE HISTORY SERVER
SERVICE CONTROLLER 122
120
MODEM BUS
132
MODEM SECURE CHANNEL #N
125
MODEM SUB SYSTEM #1
121
BUS DRIVER
124 MODEM EXECUTION PARTITION
126
MODEM PARTITION DEVICE ASSISTED SERVICE AGENTS
MODEM SERVICE CONTROL LINK
130
MODEM
MODEM SUB SYSTEM #N
127
128
134
MODEM SECURE CHANNEL #1
142
ACCESS NETWORK SVC USAGE
144
PRIVATE NETWORK SVC USAGE
148
BILLING, MEDIATION, SERVICE USAGE LOG, RECONCILATION
ACCESS NETWORK #1
136
140
INTERNET
PRIVATE NETWORK
146
ACCESS NETWORK #N
138

Fig. 1

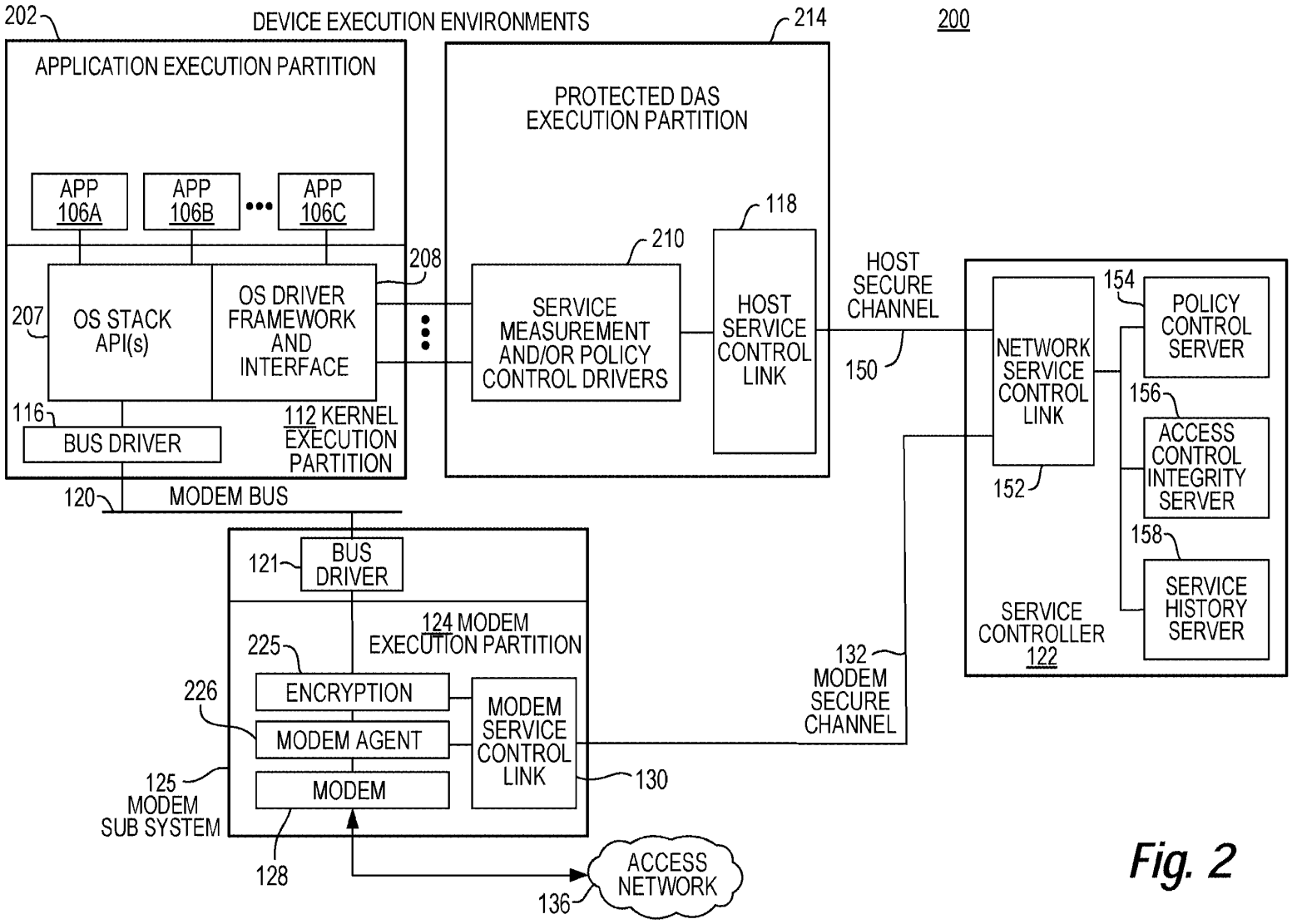
202
DEVICE EXECUTION ENVIRONMENTS
214
200
APPLICATION EXECUTION PARTITION
PROTECTED DAS EXECUTION PARTITION
APP 106A
APP 106B
APP 106C
118
210
208
207
OS STACK API(s)
OS DRIVER FRAMEWORK AND INTERFACE
SERVICE MEASUREMENT AND/OR POLICY CONTROL DRIVERS
HOST SERVICE CONTROL LINK
HOST SECURE CHANNEL
150
154
POLICY CONTROL SERVER
NETWORK SERVICE CONTROL LINK
156
ACCESS CONTROL INTEGRITY SERVER
116
BUS DRIVER
112 KERNEL EXECUTION PARTITION
152
158
SERVICE HISTORY SERVER
120
MODEM BUS
121
BUS DRIVER
124 MODEM EXECUTION PARTITION
SERVICE CONTROLLER 122
225
132 MODEM SECURE CHANNEL
226
ENCRYPTION
MODEM AGENT
MODEM SERVICE CONTROL LINK
130
125 MODEM SUB SYSTEM
MODEM
128
ACCESS NETWORK
136

Fig. 2

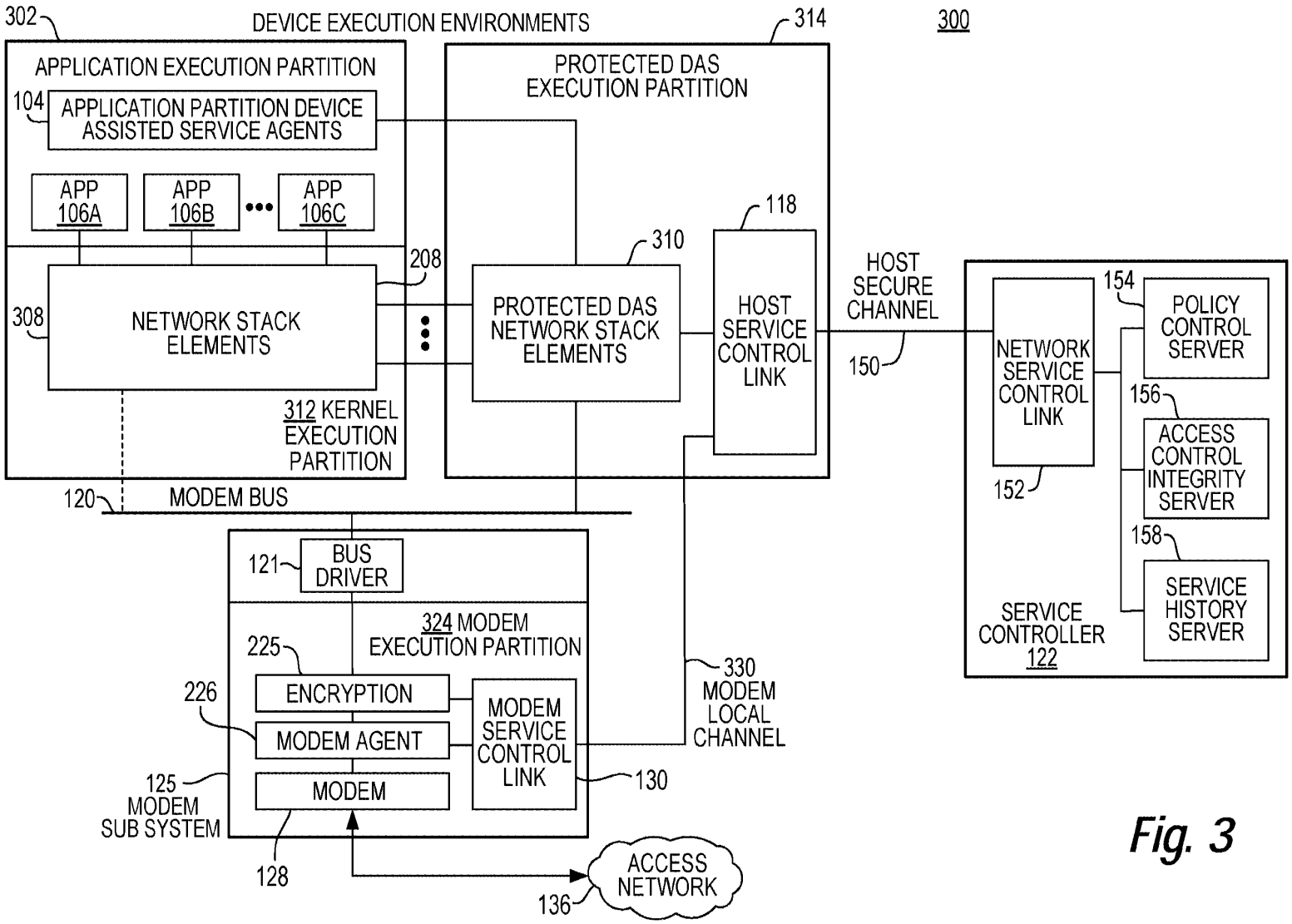
300
302
DEVICE EXECUTION ENVIRONMENTS
314
APPLICATION EXECUTION PARTITION
104
APPLICATION PARTITION DEVICE ASSISTED SERVICE AGENTS
APP 106A
APP 106B
APP 106C
308
NETWORK STACK ELEMENTS
208
312 KERNEL EXECUTION PARTITION
PROTECTED DAS EXECUTION PARTITION
310
PROTECTED DAS NETWORK STACK ELEMENTS
118
HOST SERVICE CONTROL LINK
HOST SECURE CHANNEL
150
NETWORK SERVICE CONTROL LINK
152
154
POLICY CONTROL SERVER
156
ACCESS CONTROL INTEGRITY SERVER
158
SERVICE HISTORY SERVER
SERVICE CONTROLLER 122
120
MODEM BUS
121
BUS DRIVER
324 MODEM EXECUTION PARTITION
225
ENCRYPTION
226
MODEM AGENT
MODEM
MODEM SERVICE CONTROL LINK
130
330 MODEM LOCAL CHANNEL
125 MODEM SUB SYSTEM
128
ACCESS NETWORK
136

Fig. 3

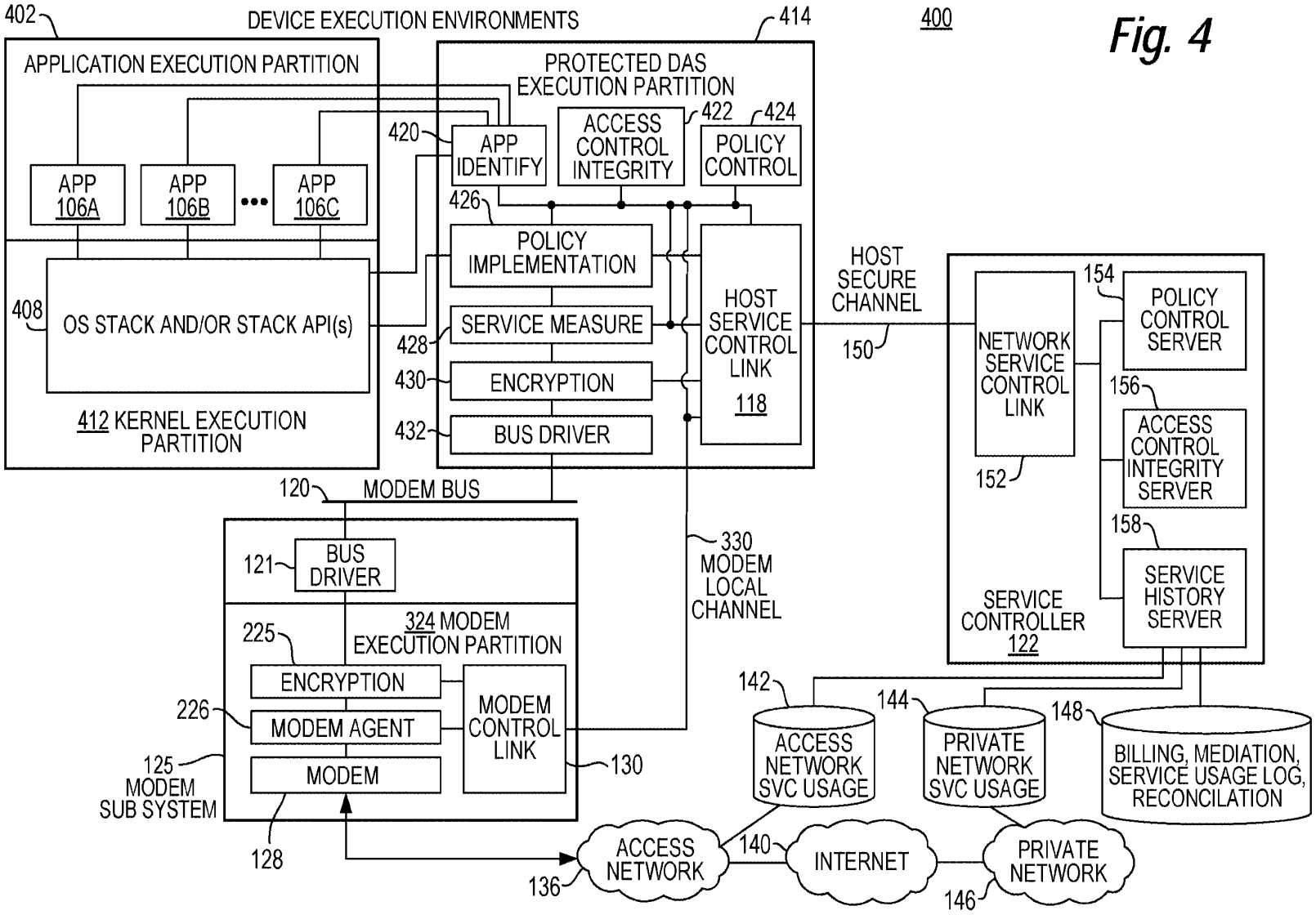
402
DEVICE EXECUTION ENVIRONMENTS
414
400
APPLICATION EXECUTION PARTITION
PROTECTED DAS EXECUTION PARTITION
420
APP IDENTIFY
ACCESS CONTROL INTEGRITY
422
424
POLICY CONTROL
APP 106A
APP 106B
APP 106C
426
POLICY IMPLEMENTATION
408
OS STACK AND/OR STACK API(s)
428
SERVICE MEASURE
430
ENCRYPTION
432
BUS DRIVER
412 KERNEL EXECUTION PARTITION
HOST SERVICE CONTROL LINK
118
HOST SECURE CHANNEL
150
154
POLICY CONTROL SERVER
NETWORK SERVICE CONTROL LINK
156
ACCESS CONTROL INTEGRITY SERVER
152
158
SERVICE HISTORY SERVER
SERVICE CONTROLLER
122
120
MODEM BUS
121
BUS DRIVER
330
MODEM LOCAL CHANNEL
324 MODEM EXECUTION PARTITION
225
ENCRYPTION
226
MODEM AGENT
MODEM CONTROL LINK
130
125
MODEM SUB SYSTEM
MODEM
128
142
ACCESS NETWORK SVC USAGE
144
PRIVATE NETWORK SVC USAGE
148
BILLING, MEDIATION, SERVICE USAGE LOG, RECONCILATION
ACCESS NETWORK
136
140
INTERNET
PRIVATE NETWORK
146

Fig. 4

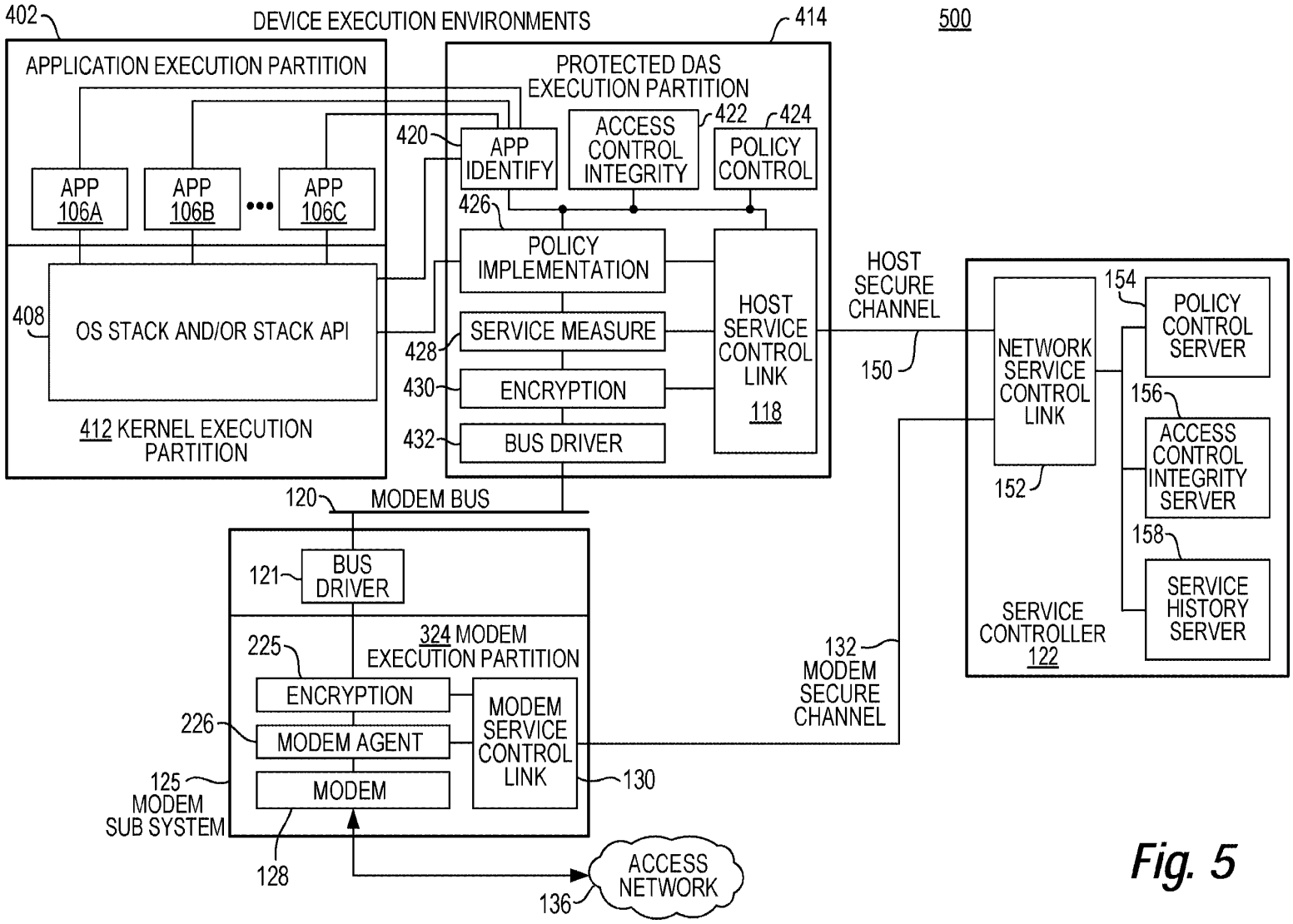
402
DEVICE EXECUTION ENVIRONMENTS
414
500
APPLICATION EXECUTION PARTITION
PROTECTED DAS EXECUTION PARTITION
420
APP IDENTIFY
ACCESS CONTROL INTEGRITY
422
424
POLICY CONTROL
APP 106A
APP 106B
APP 106C
426
POLICY IMPLEMENTATION
408
OS STACK AND/OR STACK API
428
SERVICE MEASURE
430
ENCRYPTION
432
BUS DRIVER
HOST SERVICE CONTROL LINK 118
412 KERNEL EXECUTION PARTITION
HOST SECURE CHANNEL
150
154
POLICY CONTROL SERVER
NETWORK SERVICE CONTROL LINK
156
ACCESS CONTROL INTEGRITY SERVER
152
158
SERVICE HISTORY SERVER
SERVICE CONTROLLER 122
120
MODEM BUS
121
BUS DRIVER
225
324 MODEM EXECUTION PARTITION
ENCRYPTION
226
MODEM AGENT
MODEM SERVICE CONTROL LINK
130
132
MODEM SECURE CHANNEL
125
MODEM SUB SYSTEM
MODEM
128
136
ACCESS NETWORK

Fig. 5

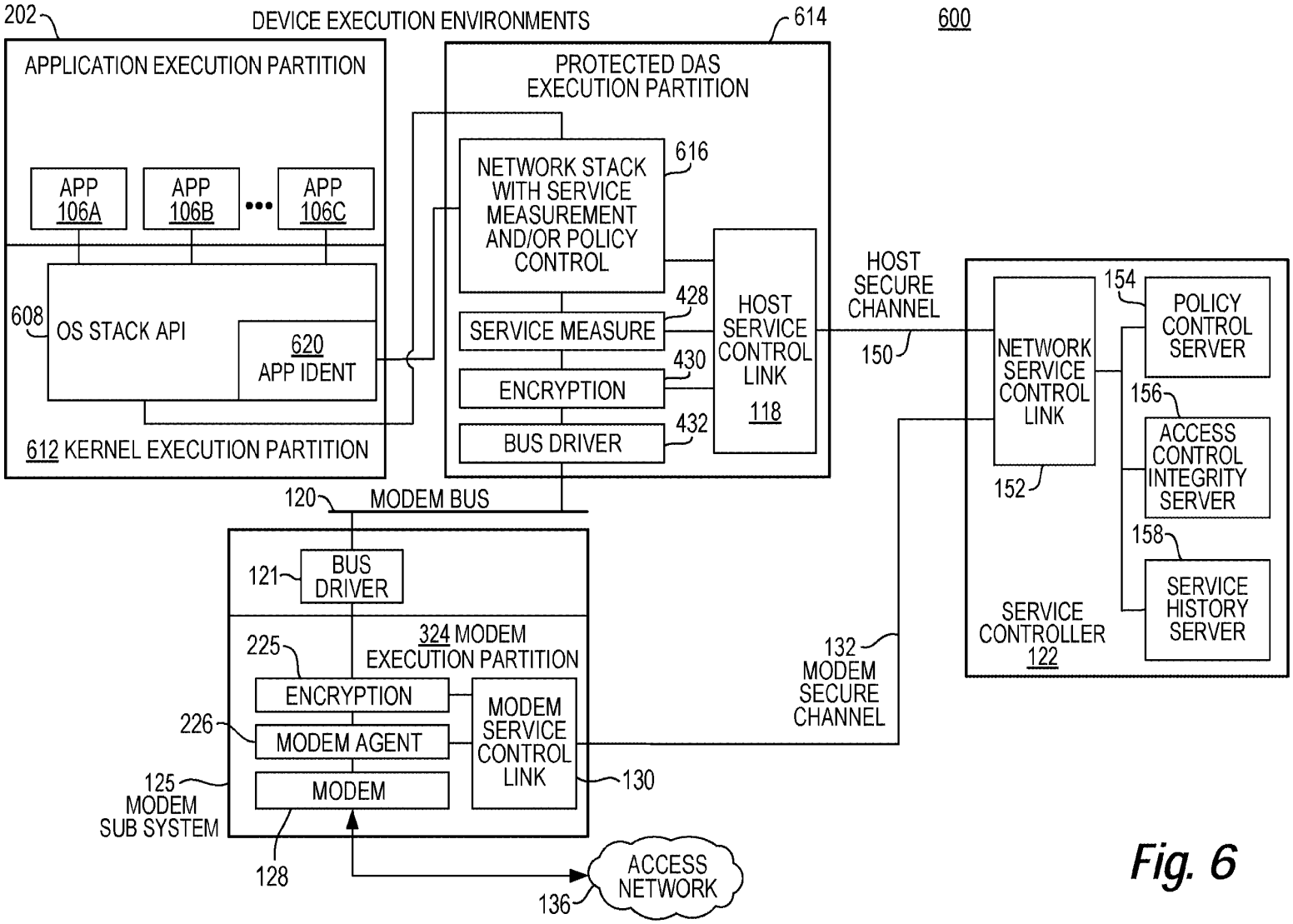
202
DEVICE EXECUTION ENVIRONMENTS
614
600
APPLICATION EXECUTION PARTITION
APP 106A
APP 106B
APP 106C
608
OS STACK API
620 APP IDENT
612 KERNEL EXECUTION PARTITION
PROTECTED DAS EXECUTION PARTITION
NETWORK STACK WITH SERVICE MEASUREMENT AND/OR POLICY CONTROL
616
SERVICE MEASURE
428
ENCRYPTION
430
BUS DRIVER
432
HOST SERVICE CONTROL LINK 118
HOST SECURE CHANNEL
150
NETWORK SERVICE CONTROL LINK
152
154
POLICY CONTROL SERVER
156
ACCESS CONTROL INTEGRITY SERVER
158
SERVICE HISTORY SERVER
SERVICE CONTROLLER 122
120
MODEM BUS
121
BUS DRIVER
324 MODEM EXECUTION PARTITION
225
ENCRYPTION
226
MODEM AGENT
MODEM SERVICE CONTROL LINK
130
125 MODEM SUB SYSTEM
MODEM
128
132 MODEM SECURE CHANNEL
ACCESS NETWORK
136

Fig. 6

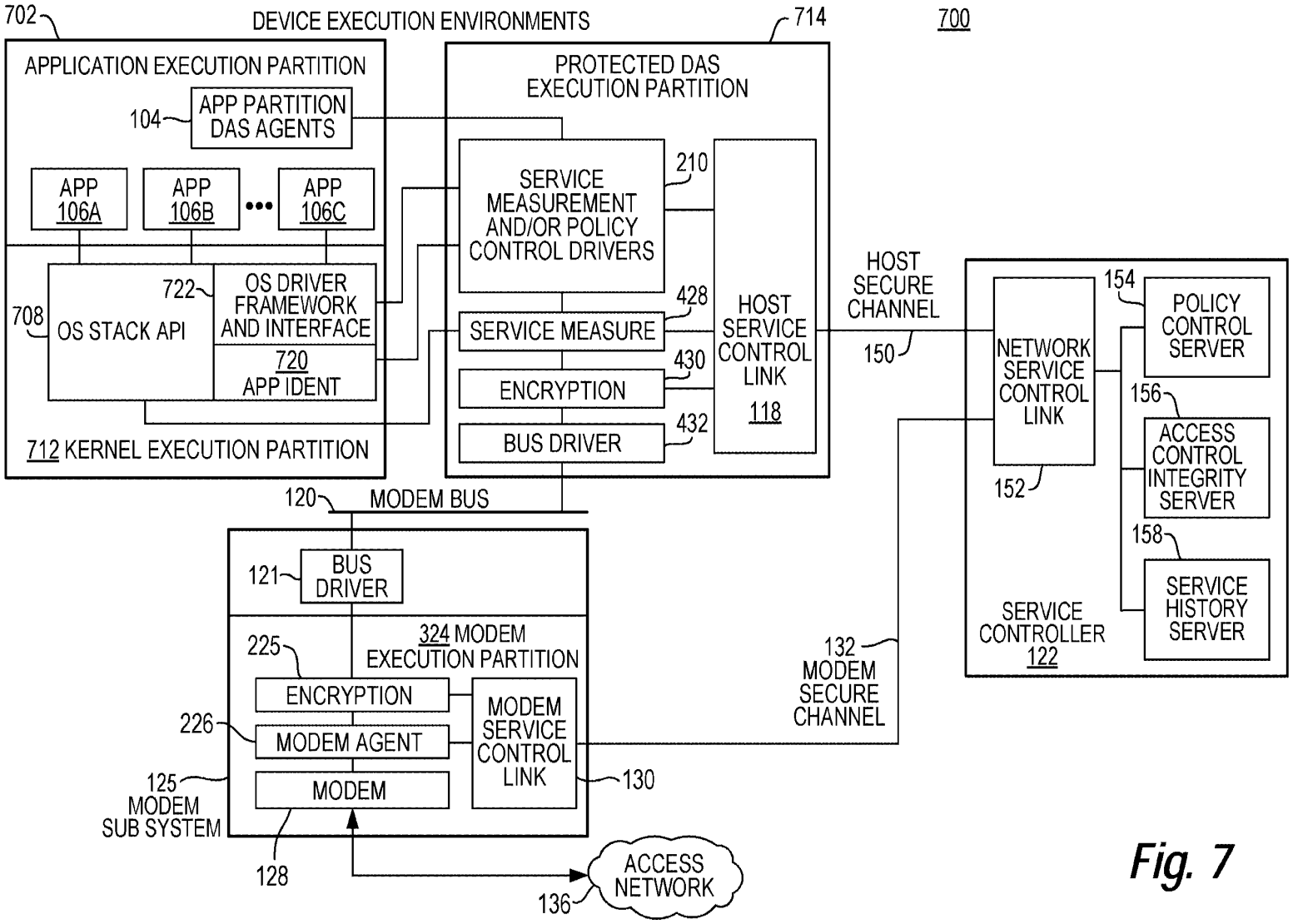
702
DEVICE EXECUTION ENVIRONMENTS
714
700
APPLICATION EXECUTION PARTITION
104
APP PARTITION DAS AGENTS
APP 106A
APP 106B
APP 106C
708
OS STACK API
722
OS DRIVER FRAMEWORK AND INTERFACE
720 APP IDENT
712 KERNEL EXECUTION PARTITION
PROTECTED DAS EXECUTION PARTITION
SERVICE MEASUREMENT AND/OR POLICY CONTROL DRIVERS
210
SERVICE MEASURE
428
ENCRYPTION
430
BUS DRIVER
432
HOST SERVICE CONTROL LINK 118
HOST SECURE CHANNEL
150
NETWORK SERVICE CONTROL LINK
152
154
POLICY CONTROL SERVER
156
ACCESS CONTROL INTEGRITY SERVER
158
SERVICE HISTORY SERVER
SERVICE CONTROLLER 122
120
MODEM BUS
121
BUS DRIVER
324 MODEM EXECUTION PARTITION
225
ENCRYPTION
226
MODEM AGENT
MODEM SERVICE CONTROL LINK
130
125 MODEM SUB SYSTEM
MODEM
128
132 MODEM SECURE CHANNEL
ACCESS NETWORK
136

Fig. 7

7/11

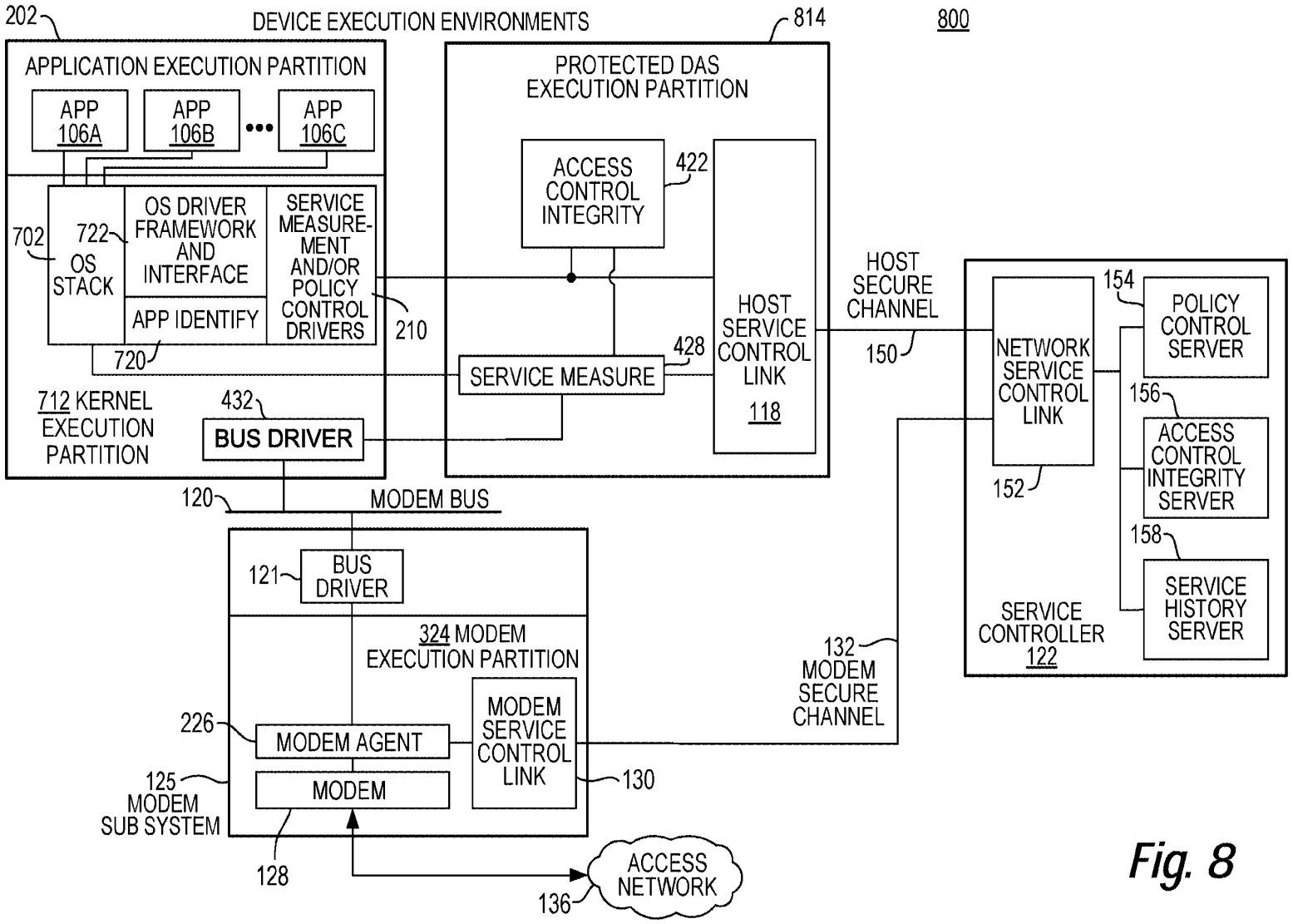
202
DEVICE EXECUTION ENVIRONMENTS
814
800
APPLICATION EXECUTION PARTITION
APP 106A
APP 106B
APP 106C
702
722
OS STACK
OS DRIVER FRAMEWORK AND INTERFACE
APP IDENTIFY
SERVICE MEASUREMENT AND/OR POLICY CONTROL DRIVERS
210
720
712 KERNEL EXECUTION PARTITION
432
BUS DRIVER
PROTECTED DAS EXECUTION PARTITION
ACCESS CONTROL INTEGRITY
422
SERVICE MEASURE
428
HOST SERVICE CONTROL LINK
118
HOST SECURE CHANNEL
150
NETWORK SERVICE CONTROL LINK
152
154
POLICY CONTROL SERVER
156
ACCESS CONTROL INTEGRITY SERVER
158
SERVICE HISTORY SERVER
SERVICE CONTROLLER 122
120
MODEM BUS
121
BUS DRIVER
324 MODEM EXECUTION PARTITION
226
MODEM AGENT
MODEM SERVICE CONTROL LINK
130
125 MODEM SUB SYSTEM
MODEM
128
132 MODEM SECURE CHANNEL
ACCESS NETWORK
136

Fig. 8

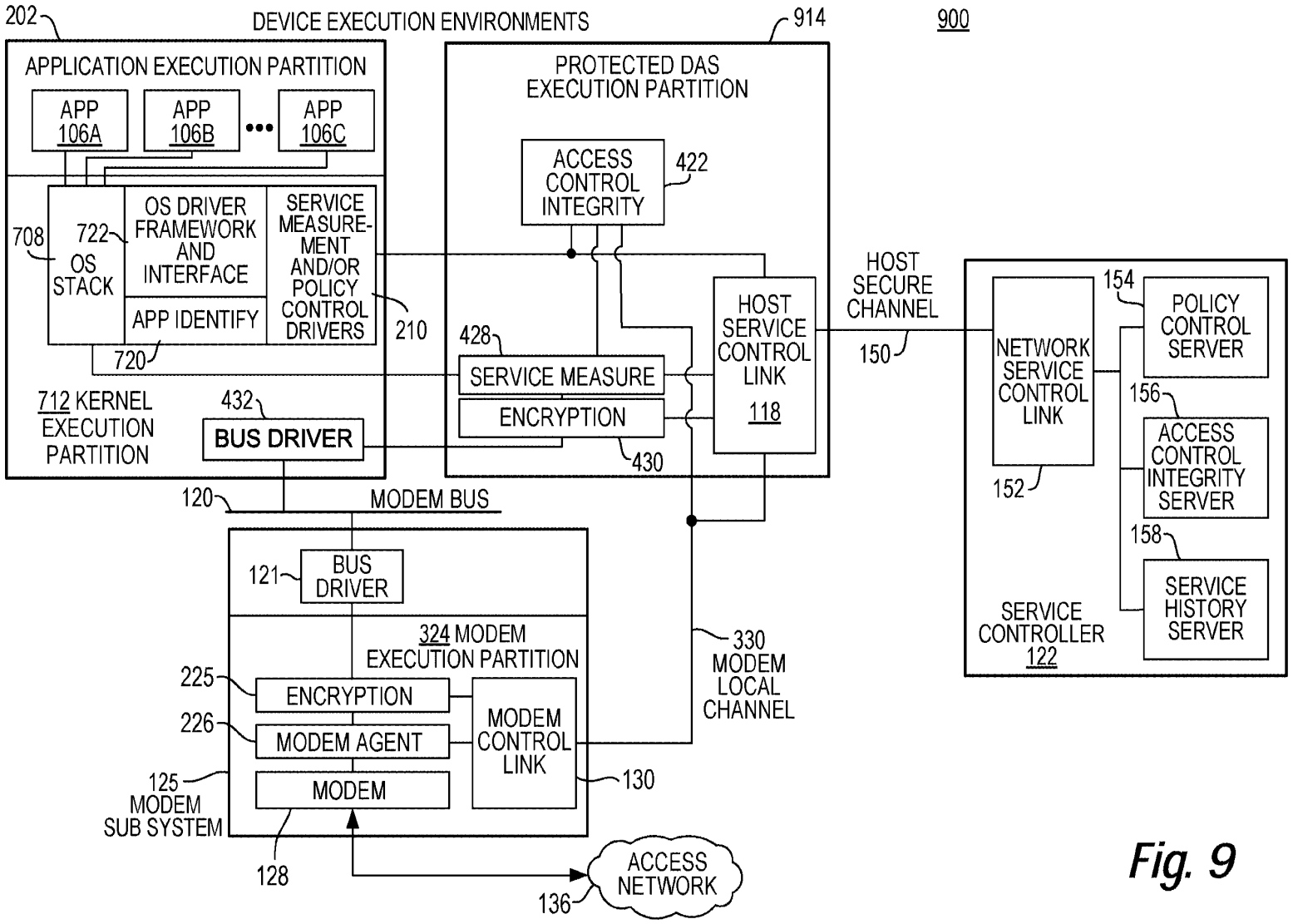
202
DEVICE EXECUTION ENVIRONMENTS
914
900
APPLICATION EXECUTION PARTITION
APP 106A
APP 106B
APP 106C
708
722
OS STACK
OS DRIVER FRAMEWORK AND INTERFACE
APP IDENTIFY
SERVICE MEASUREMENT AND/OR POLICY CONTROL DRIVERS
210
720
712 KERNEL EXECUTION PARTITION
432
BUS DRIVER
PROTECTED DAS EXECUTION PARTITION
ACCESS CONTROL INTEGRITY
422
428
SERVICE MEASURE
ENCRYPTION
430
HOST SERVICE CONTROL LINK
118
HOST SECURE CHANNEL
150
NETWORK SERVICE CONTROL LINK
152
154
POLICY CONTROL SERVER
156
ACCESS CONTROL INTEGRITY SERVER
158
SERVICE HISTORY SERVER
SERVICE CONTROLLER
122
120
MODEM BUS
121
BUS DRIVER
324 MODEM EXECUTION PARTITION
225
ENCRYPTION
226
MODEM AGENT
MODEM
MODEM CONTROL LINK
130
330
MODEM LOCAL CHANNEL
125
MODEM SUB SYSTEM
128
ACCESS NETWORK
136

Fig. 9

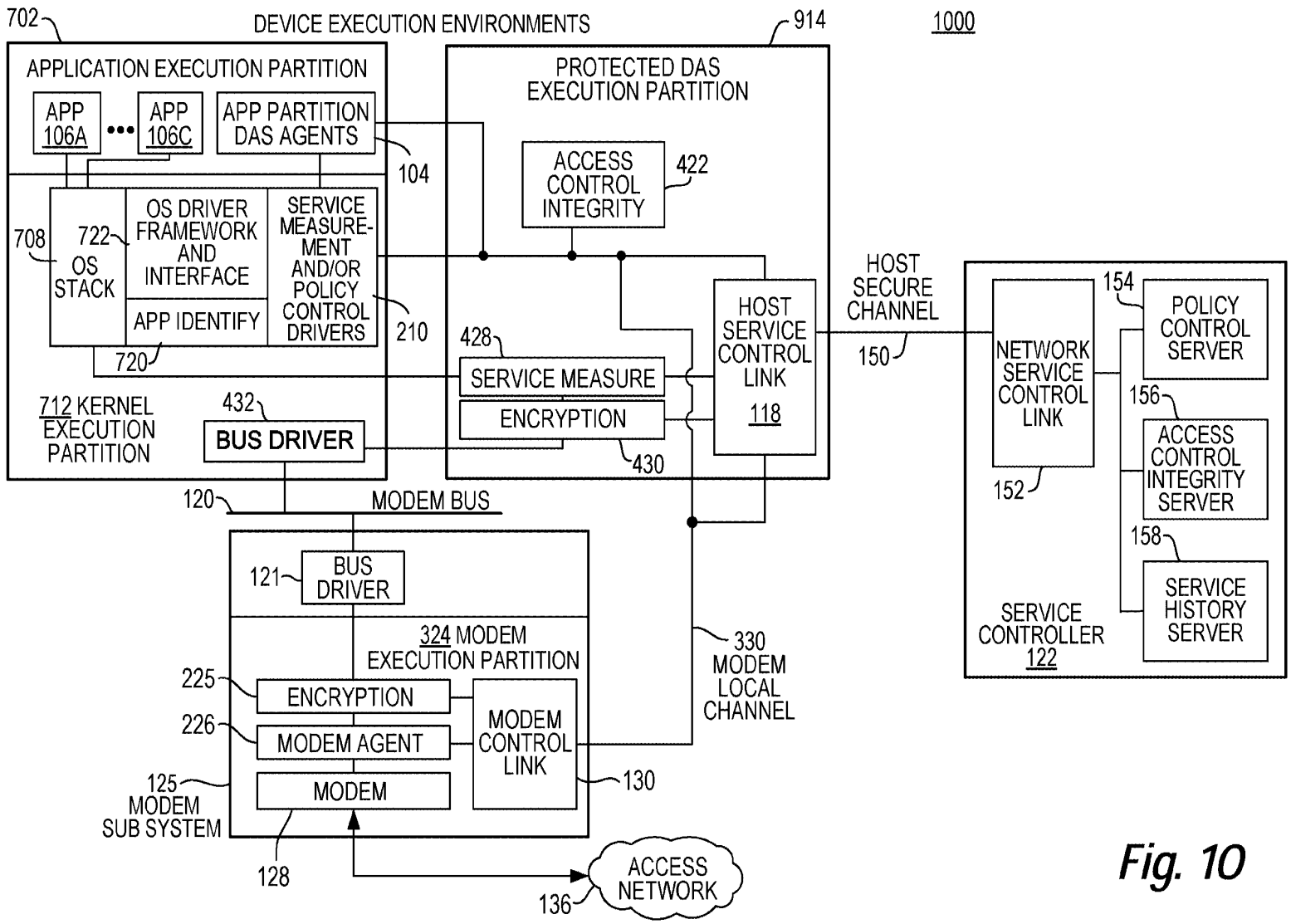
1000
DEVICE EXECUTION ENVIRONMENTS
702
APPLICATION EXECUTION PARTITION
APP 106A
APP 106C
APP PARTITION DAS AGENTS
104
708
722
OS STACK
OS DRIVER FRAMEWORK AND INTERFACE
APP IDENTIFY
720
SERVICE MEASURE-MENT AND/OR POLICY CONTROL DRIVERS
210
712 KERNEL EXECUTION PARTITION
432
BUS DRIVER
914
PROTECTED DAS EXECUTION PARTITION
ACCESS CONTROL INTEGRITY
422
428
SERVICE MEASURE
ENCRYPTION
430
HOST SERVICE CONTROL LINK
118
HOST SECURE CHANNEL
150
NETWORK SERVICE CONTROL LINK
152
154
POLICY CONTROL SERVER
156
ACCESS CONTROL INTEGRITY SERVER
158
SERVICE HISTORY SERVER
SERVICE CONTROLLER 122
120
MODEM BUS
121
BUS DRIVER
324 MODEM EXECUTION PARTITION
225
ENCRYPTION
226
MODEM AGENT
MODEM
MODEM CONTROL LINK
130
125 MODEM SUB SYSTEM
128
330 MODEM LOCAL CHANNEL
ACCESS NETWORK
136

Fig. 10

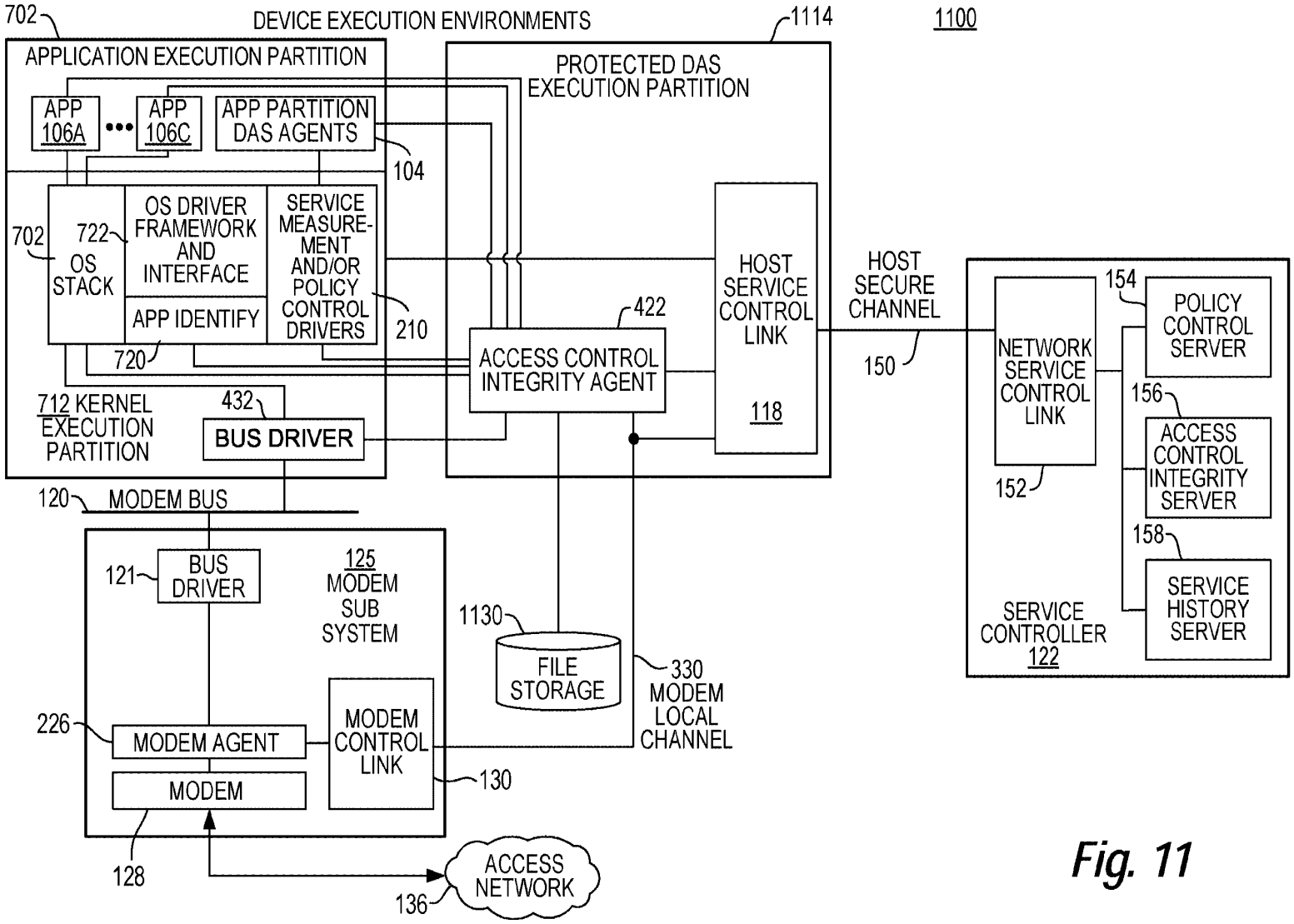
702
DEVICE EXECUTION ENVIRONMENTS
1114
1100
APPLICATION EXECUTION PARTITION
PROTECTED DAS EXECUTION PARTITION
APP 106A
APP 106C
APP PARTITION DAS AGENTS
104
702
722
OS STACK
OS DRIVER FRAMEWORK AND INTERFACE
APP IDENTIFY
SERVICE MEASURE-MENT AND/OR POLICY CONTROL DRIVERS
210
720
422
ACCESS CONTROL INTEGRITY AGENT
HOST SERVICE CONTROL LINK
118
HOST SECURE CHANNEL
150
712 KERNEL EXECUTION PARTITION
432
BUS DRIVER
120
MODEM BUS
121
BUS DRIVER
125 MODEM SUB SYSTEM
1130
FILE STORAGE
330 MODEM LOCAL CHANNEL
226
MODEM AGENT
MODEM CONTROL LINK
130
MODEM
128
ACCESS NETWORK
136
NETWORK SERVICE CONTROL LINK
152
154
POLICY CONTROL SERVER
156
ACCESS CONTROL INTEGRITY SERVER
158
SERVICE HISTORY SERVER
SERVICE CONTROLLER 122

Fig. 11

PTO/AIA/01 (06-12)
Approved for use through 01/31/2014. OMB 0651-0032
U.S. Patent and Trademark Office; U.S. DEPARTMENT OF COMMERCE
Under the Paperwork Reduction Act of 1995, no persons are required to respond to a collection of information unless it displays a valid OMB control number.

DECLARATION (37 CFR 1.63) FOR UTILITY OR DESIGN APPLICATION USING AN APPLICATION DATA SHEET (37 CFR 1.76)

Title of Invention	SECURITY TECHNIQUES FOR DEVICE ASSISTED SERVICES

As the below named inventor, I hereby declare that:

This declaration is directed to:

- [x] The attached application, or
- [ ] United States application or PCT international application number _____

  filed on _____.

The above-identified application was made or authorized to be made by me.

I believe that I am the original inventor or an original joint inventor of a claimed invention in the application.

I hereby acknowledge that any willful false statement made in this declaration is punishable under 18 U.S.C. 1001 by fine or imprisonment of not more than five (5) years, or both.

WARNING:

Petitioner/applicant is cautioned to avoid submitting personal information in documents filed in a patent application that may contribute to identity theft. Personal information such as social security numbers, bank account numbers, or credit card numbers (other than a check or credit card authorization form PTO-2038 submitted for payment purposes) is never required by the USPTO to support a petition or an application. If this type of personal information is included in documents submitted to the USPTO, petitioners/applicants should consider redacting such personal information from the documents before submitting them to the USPTO. Petitioner/applicant is advised that the record of a patent application is available to the public after publication of the application (unless a non-publication request in compliance with 37 CFR 1.213(a) is made in the application) or issuance of a patent. Furthermore, the record from an abandoned application may also be available to the public if the application is referenced in a published application or an issued patent (see 37 CFR 1.14). Checks and credit card authorization forms PTO-2038 submitted for payment purposes are not retained in the application file and therefore are not publicly available.

LEGAL NAME OF INVENTOR

Inventor: Gregory G. Raleigh Date (Optional) :_____

Signature: _____

Note: An application data sheet (PTO/SB/14 or equivalent), including naming the entire inventive entity, must accompany this form or must have been previously filed. Use an additional PTO/AIA/01 form for each additional inventor.

This collection of information is required by 35 U.S.C. 115 and 37 CFR 1.63. The information is required to obtain or retain a benefit by the public which is to file (and by the USPTO to process) an application. Confidentiality is governed by 35 U.S.C. 122 and 37 CFR 1.11 and 1.14. This collection is estimated to take 1 minute to complete, including gathering, preparing, and submitting the completed application form to the USPTO. Time will vary depending upon the individual case. Any comments on the amount of time you require to complete this form and/or suggestions for reducing this burden, should be sent to the Chief Information Officer, U.S. Patent and Trademark Office, U.S. Department of Commerce, P.O. Box 1450, Alexandria, VA 22313-1450. DO NOT SEND FEES OR COMPLETED FORMS TO THIS ADDRESS. **SEND TO: Commissioner for Patents, P.O. Box 1450, Alexandria, VA 22313-1450.**

If you need assistance in completing the form, call 1-800-PTO-9199 and select option 2.

PTO/AIA/14 (11-15)
Approved for use through 04/30/2017. OMB 0651-0032
U.S. Patent and Trademark Office; U.S. DEPARTMENT OF COMMERCE
Under the Paperwork Reduction Act of 1995, no persons are required to respond to a collection of information unless it contains a valid OMB control number.

Application Data Sheet 37 CFR 1.76	Attorney Docket Number	RALEP025C1C1C1C1
	Application Number	
Title of Invention	Security Techniques for Device Assisted Services	

The application data sheet is part of the provisional or nonprovisional application for which it is being submitted. The following form contains the bibliographic data arranged in a format specified by the United States Patent and Trademark Office as outlined in 37 CFR 1.76.
This document may be completed electronically and submitted to the Office in electronic format using the Electronic Filing System (EFS) or the document may be printed and included in a paper filed application.

Secrecy Order 37 CFR 5.2:

☐ Portions or all of the application associated with this Application Data Sheet may fall under a Secrecy Order pursuant to 37 CFR 5.2 (Paper filers only. Applications that fall under Secrecy Order may not be filed electronically.)

Inventor Information:

Inventor 1 Remove

Legal Name

Prefix	Given Name	Middle Name	Family Name	Suffix
	Gregory	G.	Raleigh	

Residence Information (Select One) ● US Residency Non US Residency Active US Military Service

City	Woodside	State/Province	CA	Country of Residence i	US

Mailing Address of Inventor:

Address 1	1011 Pruitt Place		
Address 2			
City	Tyler	State/Province	TX
Postal Code	75703	Country i	US

All Inventors Must Be Listed - Additional Inventor Information blocks may be generated within this form by selecting the **Add** button. Add

Correspondence Information:

Enter either Customer Number or complete the Correspondence Information section below.
For further information see 37 CFR 1.33(a).

☐ **An Address is being provided for the correspondence Information of this application.**

Customer Number	106963		
Email Address	patent@headwaterllc.com	Add Email	Remove Email

Application Information:

Title of the Invention	Security Techniques for Device Assisted Services		
Attorney Docket Number	RALEP025C1C1C1C1	Small Entity Status Claimed	☒
Application Type	Nonprovisional		
Subject Matter	Utility		
Total Number of Drawing Sheets (if any)	11	Suggested Figure for Publication (if any)	

Under the Paperwork Reduction Act of 1995, no persons are required to respond to a collection of information unless it contains a valid OMB control number.

Application Data Sheet 37 CFR 1.76	Attorney Docket Number	RALEP025C1C1C1C1
	Application Number	
Title of Invention	Security Techniques for Device Assisted Services	

Filing By Reference:

Only complete this section when filing an application by reference under 35 U.S.C. 111(c) and 37 CFR 1.57(a). Do not complete this section if application papers including a specification and any drawings are being filed. Any domestic benefit or foreign priority information must be provided in the appropriate section(s) below (i.e., "Domestic Benefit/National Stage Information" and "Foreign Priority Information").

For the purposes of a filing date under 37 CFR 1.53(b), the description and any drawings of the present application are replaced by this reference to the previously filed application, subject to conditions and requirements of 37 CFR 1.57(a).

Application number of the previously filed application	Filing date (YYYY-MM-DD)	Intellectual Property Authority or Country

Publication Information:

☐ Request Early Publication (Fee required at time of Request 37 CFR 1.219)

☐ **Request Not to Publish.** I hereby request that the attached application not be published under 35 U.S.C. 122(b) and certify that the invention disclosed in the attached application **has not and will not** be the subject of an application filed in another country, or under a multilateral international agreement, that requires publication at eighteen months after filing.

Representative Information:

Representative information should be provided for all practitioners having a power of attorney in the application. Providing this information in the Application Data Sheet does not constitute a power of attorney in the application (see 37 CFR 1.32).
Either enter Customer Number or complete the Representative Name section below. If both sections are completed the customer Number will be used for the Representative Information during processing.

Please Select One:	● Customer Number	US Patent Practitioner	◯ Limited Recognition (37 CFR 11.9)
Customer Number	106963		

Domestic Benefit/National Stage Information:

This section allows for the applicant to either claim benefit under 35 U.S.C. 119(e), 120, 121, 365(c), or 386(c) or indicate National Stage entry from a PCT application. Providing benefit claim information in the Application Data Sheet constitutes the specific reference required by 35 U.S.C. 119(e) or 120, and 37 CFR 1.78.
When referring to the current application, please leave the "Application Number" field blank.

Prior Application Status	Pending		Remove
Application Number	Continuity Type	Prior Application Number	Filing or 371(c) Date (YYYY-MM-DD)
thisapplication	Continuation of	16034362	2018-07-13

Under the Paperwork Reduction Act of 1995, no persons are required to respond to a collection of information unless it contains a valid OMB control number.

Application Data Sheet 37 CFR 1.76	Attorney Docket Number	RALEP025C1C1C1C1
	Application Number	
Title of Invention	Security Techniques for Device Assisted Services	

Prior Application Status	Patented				Remove
Application Number	Continuity Type	Prior Application Number	Filing Date (YYYY-MM-DD)	Patent Number	Issue Date (YYYY-MM-DD)
16034362	Continuation of	14948065	2015-11-20	10028144	2018-07-17
Prior Application Status	Patented				Remove
Application Number	Continuity Type	Prior Application Number	Filing Date (YYYY-MM-DD)	Patent Number	Issue Date (YYYY-MM-DD)
14948065	Continuation of	13737748	2013-01-09	9198042	2015-11-24
Prior Application Status	Patented				Remove
Application Number	Continuity Type	Prior Application Number	Filing Date (YYYY-MM-DD)	Patent Number	Issue Date (YYYY-MM-DD)
13737748	Continuation of	12694445	2010-01-27	8391834	2013-03-05
Prior Application Status	Patented				Remove
Application Number	Continuity Type	Prior Application Number	Filing Date (YYYY-MM-DD)	Patent Number	Issue Date (YYYY-MM-DD)
12694445	Continuation in part of	12380780	2009-03-02	8839388	2014-09-16
Prior Application Status	Expired				Remove
Application Number	Continuity Type	Prior Application Number	Filing or 371(c) Date (YYYY-MM-DD)		
12694445	Claims benefit of provisional	61252151	2009-10-15		
Prior Application Status	Expired				Remove
Application Number	Continuity Type	Prior Application Number	Filing or 371(c) Date (YYYY-MM-DD)		
12380780	Claims benefit of provisional	61206354	2009-01-28		
Prior Application Status	Expired				Remove
Application Number	Continuity Type	Prior Application Number	Filing or 371(c) Date (YYYY-MM-DD)		
12380780	Claims benefit of provisional	61206944	2009-02-04		
Prior Application Status	Expired				Remove
Application Number	Continuity Type	Prior Application Number	Filing or 371(c) Date (YYYY-MM-DD)		
12380780	Claims benefit of provisional	61207393	2009-02-10		
Prior Application Status	Expired				Remove
Application Number	Continuity Type	Prior Application Number	Filing or 371(c) Date (YYYY-MM-DD)		
12380780	Claims benefit of provisional	61207739	2009-02-13		

Additional Domestic Benefit/National Stage Data may be generated within this form by selecting the **Add** button. Add

Application Data Sheet 37 CFR 1.76	Attorney Docket Number	RALEP025C1C1C1C1
	Application Number	
Title of Invention	Security Techniques for Device Assisted Services	

Foreign Priority Information:

This section allows for the applicant to claim priority to a foreign application. Providing this information in the application data sheet constitutes the claim for priority as required by 35 U.S.C. 119(b) and 37 CFR 1.55. When priority is claimed to a foreign application that is eligible for retrieval under the priority document exchange program (PDX)[i] the information will be used by the Office to automatically attempt retrieval pursuant to 37 CFR 1.55(i)(1) and (2). Under the PDX program, applicant bears the ultimate responsibility for ensuring that a copy of the foreign application is received by the Office from the participating foreign intellectual property office, or a certified copy of the foreign priority application is filed, within the time period specified in 37 CFR 1.55(g)(1).

Remove

Application Number	Country[i]	Filing Date (YYYY-MM-DD)	Access Code[j] (if applicable)

Additional Foreign Priority Data may be generated within this form by selecting the **Add** button. Add

Statement under 37 CFR 1.55 or 1.78 for AIA (First Inventor to File) Transition Applications

☐ This application (1) claims priority to or the benefit of an application filed before March 16, 2013 and (2) also contains, or contained at any time, a claim to a claimed invention that has an effective filing date on or after March 16, 2013.
NOTE: By providing this statement under 37 CFR 1.55 or 1.78, this application, with a filing date on or after March 16, 2013, will be examined under the first inventor to file provisions of the AIA.

Application Data Sheet 37 CFR 1.76	Attorney Docket Number	RALEP025C1C1C1C1
	Application Number	
Title of Invention	Security Techniques for Device Assisted Services	

Authorization or Opt-Out of Authorization to Permit Access:

When this Application Data Sheet is properly signed and filed with the application, applicant has provided written authority to permit a participating foreign intellectual property (IP) office access to the instant application-as-filed (see paragraph A in subsection 1 below) and the European Patent Office (EPO) access to any search results from the instant application (see paragraph B in subsection 1 below).

Should applicant choose not to provide an authorization identified in subsection 1 below, applicant **must opt-out** of the authorization by checking the corresponding box A or B or both in subsection 2 below.

NOTE: This section of the Application Data Sheet is **ONLY** reviewed and processed with the **INITIAL** filing of an application. After the initial filing of an application, an Application Data Sheet cannot be used to provide or rescind authorization for access by a foreign IP office(s). Instead, Form PTO/SB/39 or PTO/SB/69 must be used as appropriate.

1. Authorization to Permit Access by a Foreign Intellectual Property Office(s)

A. Priority Document Exchange (PDX) - Unless box A in subsection 2 (opt-out of authorization) is checked, the undersigned hereby **grants the USPTO authority** to provide the European Patent Office (EPO), the Japan Patent Office (JPO), the Korean Intellectual Property Office (KIPO), the State Intellectual Property Office of the People's Republic of China (SIPO), the World Intellectual Property Organization (WIPO), and any other foreign intellectual property office participating with the USPTO in a bilateral or multilateral priority document exchange agreement in which a foreign application claiming priority to the instant patent application is filed, access to: (1) the instant patent application-as-filed and its related bibliographic data, (2) any foreign or domestic application to which priority or benefit is claimed by the instant application and its related bibliographic data, and (3) the date of filing of this Authorization. See 37 CFR 1.14(h)(1).

B. Search Results from U.S. Application to EPO - Unless box B in subsection 2 (opt-out of authorization) is checked, the undersigned hereby **grants the USPTO authority** to provide the EPO access to the bibliographic data and search results from the instant patent application when a European patent application claiming priority to the instant patent application is filed. See 37 CFR 1.14(h)(2).

The applicant is reminded that the EPO's Rule 141(1) EPC (European Patent Convention) requires applicants to submit a copy of search results from the instant application without delay in a European patent application that claims priority to the instant application.

2. Opt-Out of Authorizations to Permit Access by a Foreign Intellectual Property Office(s)

☐ A. Applicant **DOES NOT** authorize the USPTO to permit a participating foreign IP office access to the instant application-as-filed. If this box is checked, the USPTO will not be providing a participating foreign IP office with any documents and information identified in subsection 1A above.

☐ B. Applicant **DOES NOT** authorize the USPTO to transmit to the EPO any search results from the instant patent application. If this box is checked, the USPTO will not be providing the EPO with search results from the instant application.

NOTE: Once the application has published or is otherwise publicly available, the USPTO may provide access to the application in accordance with 37 CFR 1.14.

Under the Paperwork Reduction Act of 1995, no persons are required to respond to a collection of information unless it contains a valid OMB control number.

Application Data Sheet 37 CFR 1.76	Attorney Docket Number	RALEP025C1C1C1C1
	Application Number	
Title of Invention	Security Techniques for Device Assisted Services	

Applicant Information:

Providing assignment information in this section does not substitute for compliance with any requirement of part 3 of Title 37 of CFR to have an assignment recorded by the Office.

Applicant 1 Remove

If the applicant is the inventor (or the remaining joint inventor or inventors under 37 CFR 1.45), this section should not be completed. The information to be provided in this section is the name and address of the legal representative who is the applicant under 37 CFR 1.43; or the name and address of the assignee, person to whom the inventor is under an obligation to assign the invention, or person who otherwise shows sufficient proprietary interest in the matter who is the applicant under 37 CFR 1.46. If the applicant is an applicant under 37 CFR 1.46 (assignee, person to whom the inventor is obligated to assign, or person who otherwise shows sufficient proprietary interest) together with one or more joint inventors, then the joint inventor or inventors who are also the applicant should be identified in this section.

Clear

● Assignee	Legal Representative under 35 U.S.C. 117	Joint Inventor
Person to whom the inventor is obligated to assign.	Person who shows sufficient proprietary interest	

If applicant is the legal representative, indicate the authority to file the patent application, the inventor is:

Name of the Deceased or Legally Incapacitated Inventor:

If the Applicant is an Organization check here. ☒

Organization Name	Headwater Research LLC		
Mailing Address Information For Applicant:			
Address 1	1011 Pruitt Place		
Address 2			
City	Tyler	**State/Province**	TX
Country	US	Postal Code	75703
Phone Number	903-201-6212	Fax Number	
Email Address	patent@headwaterllc.com		

Additional Applicant Data may be generated within this form by selecting the Add button. Add

Assignee Information including Non-Applicant Assignee Information:

Providing assignment information in this section does not substitute for compliance with any requirement of part 3 of Title 37 of CFR to have an assignment recorded by the Office.

Under the Paperwork Reduction Act of 1995, no persons are required to respond to a collection of information unless it contains a valid OMB control number.

Application Data Sheet 37 CFR 1.76	Attorney Docket Number	RALEP025C1C1C1C1
	Application Number	
Title of Invention	Security Techniques for Device Assisted Services	

Assignee 1

Complete this section if assignee information, including non-applicant assignee information, is desired to be included on the patent application publication. An assignee-applicant identified in the "Applicant Information" section will appear on the patent application publication as an applicant. For an assignee-applicant, complete this section only if identification as an assignee is also desired on the patent application publication.

Remove

If the Assignee or Non-Applicant Assignee is an Organization check here. ☒

Organization Name	Headwater Research LLC

Mailing Address Information For Assignee including Non-Applicant Assignee:

Address 1	1011 Pruitt Place		
Address 2			
City	Tyler	**State/Province**	TX
Country i	US	Postal Code	75703
Phone Number	903-201-6212	Fax Number	
Email Address	patent@headwaterllc.com		

Additional Assignee or Non-Applicant Assignee Data may be generated within this form by selecting the Add button. Add

Signature:

Remove

NOTE: This Application Data Sheet must be signed in accordance with 37 CFR 1.33(b). **However, if this Application Data Sheet is submitted with the INITIAL filing of the application and either box A or B is not checked in subsection 2 of the "Authorization or Opt-Out of Authorization to Permit Access" section, then this form must also be signed in accordance with 37 CFR 1.14(c).**

This Application Data Sheet **must** be signed by a patent practitioner if one or more of the applicants is a **juristic entity** (e.g., corporation or association). If the applicant is two or more joint inventors, this form must be signed by a patent practitioner, **all** joint inventors who are the applicant, or one or more joint inventor-applicants who have been given power of attorney (e.g., see USPTO Form PTO/AIA/81) on behalf of **all** joint inventor-applicants.

See 37 CFR 1.4(d) for the manner of making signatures and certifications.

Signature	/James E. Harris/			Date (YYYY-MM-DD)	2020-06-22
First Name	James E.	Last Name	Harris	Registration Number	40013

Additional Signature may be generated within this form by selecting the Add button. Add

Application Data Sheet 37 CFR 1.76	Attorney Docket Number	RALEP025C1C1C1C1
	Application Number	
Title of Invention	Security Techniques for Device Assisted Services	

This collection of information is required by 37 CFR 1.76. The information is required to obtain or retain a benefit by the public which is to file (and by the USPTO to process) an application. Confidentiality is governed by 35 U.S.C. 122 and 37 CFR 1.14. This collection is estimated to take 23 minutes to complete, including gathering, preparing, and submitting the completed application data sheet form to the USPTO. Time will vary depending upon the individual case. Any comments on the amount of time you require to complete this form and/or suggestions for reducing this burden, should be sent to the Chief Information Officer, U.S. Patent and Trademark Office, U.S. Department of Commerce, P.O. Box 1450, Alexandria, VA 22313-1450. DO NOT SEND FEES OR COMPLETED FORMS TO THIS ADDRESS. **SEND TO: Commissioner for Patents, P.O. Box 1450, Alexandria, VA 22313-1450.**

Privacy Act Statement

The Privacy Act of 1974 (P.L. 93-579) requires that you be given certain information in connection with your submission of the attached form related to a patent application or patent. Accordingly, pursuant to the requirements of the Act, please be advised that: (1) the general authority for the collection of this information is 35 U.S.C. 2(b)(2); (2) furnishing of the information solicited is voluntary; and (3) the principal purpose for which the information is used by the U.S. Patent and Trademark Office is to process and/or examine your submission related to a patent application or patent. If you do not furnish the requested information, the U.S. Patent and Trademark Office may not be able to process and/or examine your submission, which may result in termination of proceedings or abandonment of the application or expiration of the patent.

The information provided by you in this form will be subject to the following routine uses:

1 The information on this form will be treated confidentially to the extent allowed under the Freedom of Information Act (5 U.S.C. 552) and the Privacy Act (5 U.S.C. 552a). Records from this system of records may be disclosed to the Department of Justice to determine whether the Freedom of Information Act requires disclosure of these records.

2. A record from this system of records may be disclosed, as a routine use, in the course of presenting evidence to a court, magistrate, or administrative tribunal, including disclosures to opposing counsel in the course of settlement negotiations.

3 A record in this system of records may be disclosed, as a routine use, to a Member of Congress submitting a request involving an individual, to whom the record pertains, when the individual has requested assistance from the Member with respect to the subject matter of the record.

4. A record in this system of records may be disclosed, as a routine use, to a contractor of the Agency having need for the information in order to perform a contract. Recipients of information shall be required to comply with the requirements of the Privacy Act of 1974, as amended, pursuant to 5 U.S.C. 552a(m).

5. A record related to an International Application filed under the Patent Cooperation Treaty in this system of records may be disclosed, as a routine use, to the International Bureau of the World Intellectual Property Organization, pursuant to the Patent CooperationTreaty.

6. A record in this system of records may be disclosed, as a routine use, to another federal agency for purposes of National Security review (35 U.S.C. 181) and for review pursuant to the Atomic Energy Act (42 U.S.C. 218(c)).

7. A record from this system of records may be disclosed, as a routine use, to the Administrator, General Services, or his/her designee, during an inspection of records conducted by GSA as part of that agency's responsibility to recommend improvements in records management practices and programs, under authority of 44 U.S.C. 2904 and 2906. Such disclosure shall be made in accordance with the GSA regulations governing inspection of records for this purpose, and any other relevant (i.e., GSA or Commerce) directive. Such disclosure shall not be used to make determinations about individuals.

8. A record from this system of records may be disclosed, as a routine use, to the public after either publication of the application pursuant to 35 U.S.C. 122(b) or issuance of a patent pursuant to 35 U.S.C. 151. Further, a record may be disclosed, subject to the limitations of 37 CFR 1.14, as a routine use, to the public if the record was filed in an application which became abandoned or in which the proceedings were terminated and which application is referenced by either a published application, an application open to public inspections or an issued patent.

9. A record from this system of records may be disclosed, as a routine use, to a Federal, State, or local law enforcement agency, if the USPTO becomes aware of a violation or potential violation of law or regulation.

Electronic Acknowledgement Receipt

EFS ID:	39789030
Application Number:	16907887
International Application Number:	
Confirmation Number:	2653
Title of Invention:	Security Techniques for Device Assisted Services
First Named Inventor/Applicant Name:	GREGORY G RALEIGH
Customer Number:	106963
Filer:	James E. Harris/Jennifer Smith
Filer Authorized By:	James E. Harris
Attorney Docket Number:	RALEP025C1C1C1C1
Receipt Date:	22-JUN-2020
Filing Date:	
Time Stamp:	15:27:16
Application Type:	Utility under 35 USC 111(a)

Payment information:

Submitted with Payment	no

File Listing:

Document Number	Document Description	File Name	File Size(Bytes)/ Message Digest	Multi Part /.zip	Pages (if appl.)
1	Specification	SPEC.pdf	206931 f197f76f414c7289fc858c347cf47a5ac4645f97	no	29

Warnings:

Information:					
2	Claims	CLAIMS.pdf	53827 fafbe02ce4165e354fbbb7047c561bebaf558367	no	1
Warnings:					
Information:					
3	Abstract	Abstract.pdf	52451 27277c4677dd3e078ff11bcc6ab67e3fc855d283	no	1
Warnings:					
Information:					
4	Drawings-only black and white line drawings	P025C1C1C1C1_Drawings.pdf	139181 059b1bf90f5aef63d09fa0fc167714568f6c3b25	no	11
Warnings:					
Information:					
5	Oath or Declaration filed	P025C1C1C1C1_Declaration.pdf	65215 deb1ab4905ac0cf174d8ccc9415212e633d1e15a	no	1
Warnings:					
Information:					
6	Application Data Sheet	P025C1C1C1C1_ADS.pdf	1823535 815724d82b55f8cb15310c65942e015b0a9be356	no	9
Warnings:					
Information:					
		Total Files Size (in bytes):	2341140		

This Acknowledgement Receipt evidences receipt on the noted date by the USPTO of the indicated documents, characterized by the applicant, and including page counts, where applicable. It serves as evidence of receipt similar to a Post Card, as described in MPEP 503.

New Applications Under 35 U.S.C. 111
If a new application is being filed and the application includes the necessary components for a filing date (see 37 CFR 1.53(b)-(d) and MPEP 506), a Filing Receipt (37 CFR 1.54) will be issued in due course and the date shown on this Acknowledgement Receipt will establish the filing date of the application.
National Stage of an International Application under 35 U.S.C. 371
If a timely submission to enter the national stage of an international application is compliant with the conditions of 35 U.S.C. 371 and other applicable requirements a Form PCT/DO/EO/903 indicating acceptance of the application as a national stage submission under 35 U.S.C. 371 will be issued in addition to the Filing Receipt, in due course.
New International Application Filed with the USPTO as a Receiving Office
If a new international application is being filed and the international application includes the necessary components for an international filing date (see PCT Article 11 and MPEP 1810), a Notification of the International Application Number and of the International Filing Date (Form PCT/RO/105) will be issued in due course, subject to prescriptions concerning national security, and the date shown on this Acknowledgement Receipt will establish the international filing date of the application.