US 20110314287A1

(19) United States

(12) Patent Application Publication

ESCOTT et al.

(10) Pub. No.: US 2011/0314287 A1

(43) Pub. Date: Dec. 22, 2011

(54) **METHOD AND APPARATUS FOR BINDING SUBSCRIBER AUTHENTICATION AND DEVICE AUTHENTICATION IN COMMUNICATION SYSTEMS**

(75) Inventors: **Adrian Edward ESCOTT**, Reading (GB); **Anand PALANIGOUNDER**, San Diego, CA (US)

(73) Assignee: **QUALCOMM Incorporated**, San Diego, CA (US)

(21) Appl. No.: **13/161,336**

(22) Filed: **Jun. 15, 2011**

Related U.S. Application Data

(60) Provisional application No. 61/355,423, filed on Jun. 16, 2010.

Publication Classification

(51) **Int. Cl.**
H04W 12/06 (2009.01)
H04W 12/04 (2009.01)

(52) **U.S. Cl.** **713/171**

(57) **ABSTRACT**

An authentication method is provided between a device (e.g., a client device or access terminal) and a network entity. A removable storage device may be coupled to the device and stores a subscriber-specific key that may be used for subscriber authentication. A secure storage device may be coupled to the device and stores a device-specific key used for device authentication. Subscriber authentication may be performed between the device and a network entity. Device authentication may also be performed of the device with the network entity. A security key may then be generated that binds the subscriber authentication and the device authentication. The security key may be used to secure communications between the device and a serving network.

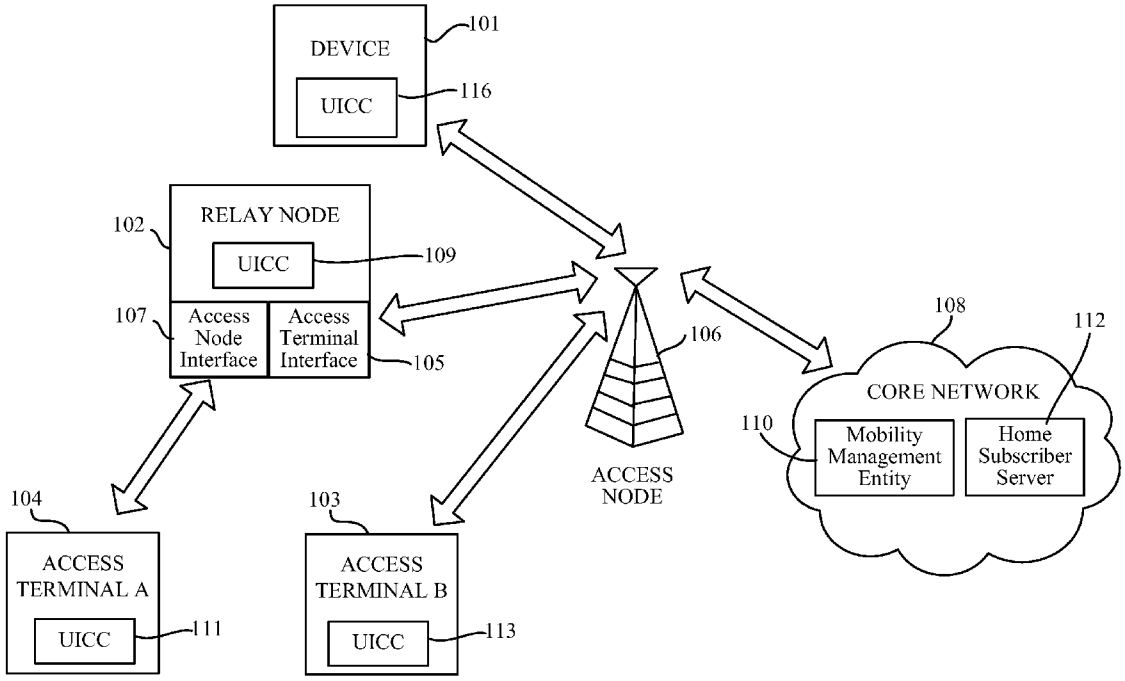

Salesforce EX1045
Salesforce, Inc. v. IQX Corp.
IPR2026-00477

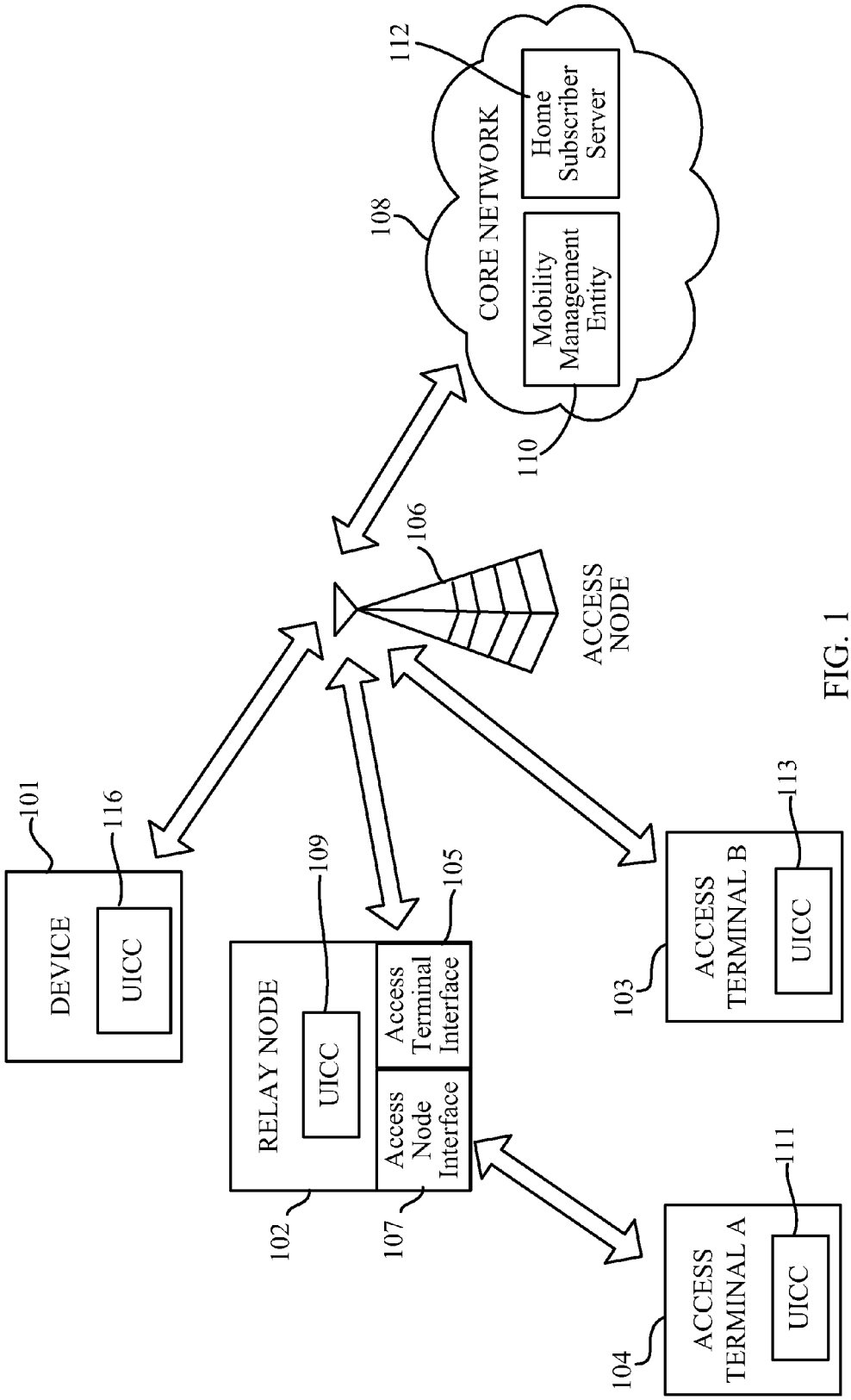
CORE NETWORK
Home Subscriber Server
Mobility Management Entity
112
108
110
106
ACCESS NODE
101
DEVICE
116
UICC
RELAY NODE
UICC
109
Access Terminal Interface
105
Access Node Interface
102
107
ACCESS TERMINAL B
UICC
113
103
ACCESS TERMINAL A
UICC
111
104

FIG. 1

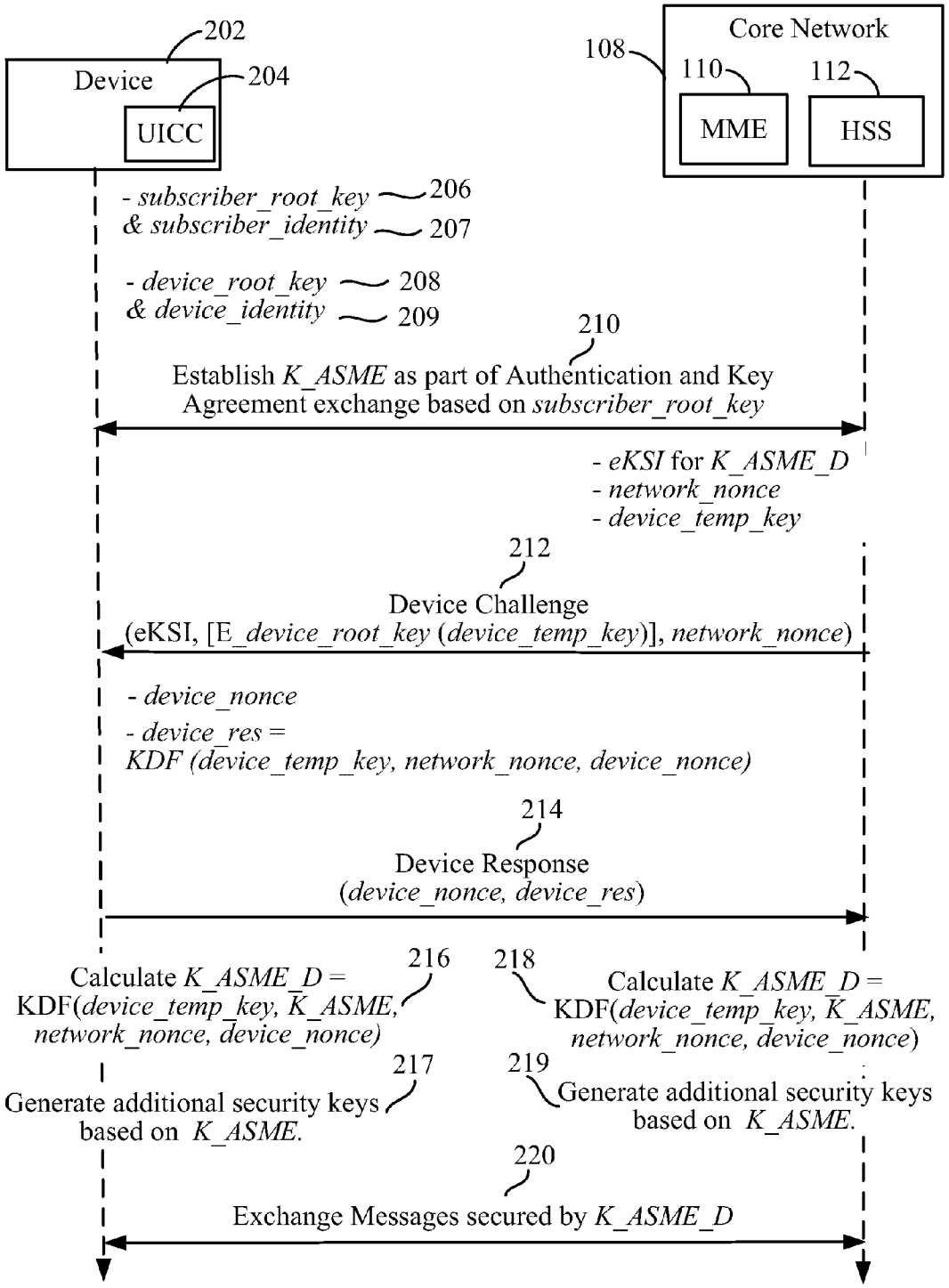
202
Device
204
UICC
Core Network
108
110
112
MME
HSS
- subscriber_root_key 206
& subscriber_identity 207
- device_root_key 208
& device_identity 209
210
Establish K_ASME as part of Authentication and Key Agreement exchange based on subscriber_root_key
- eKSI for K_ASME_D
- network_nonce
- device_temp_key
212
Device Challenge
(eKSI, [E_device_root_key (device_temp_key)], network_nonce)
- device_nonce
- device_res =
KDF (device_temp_key, network_nonce, device_nonce)
214
Device Response
(device_nonce, device_res)
216
Calculate K_ASME_D = KDF(device_temp_key, K_ASME, network_nonce, device_nonce)
218
Calculate K_ASME_D = KDF(device_temp_key, K_ASME, network_nonce, device_nonce)
217
Generate additional security keys based on K_ASME.
219
Generate additional security keys based on K_ASME.
220
Exchange Messages secured by K_ASME_D

FIG. 2

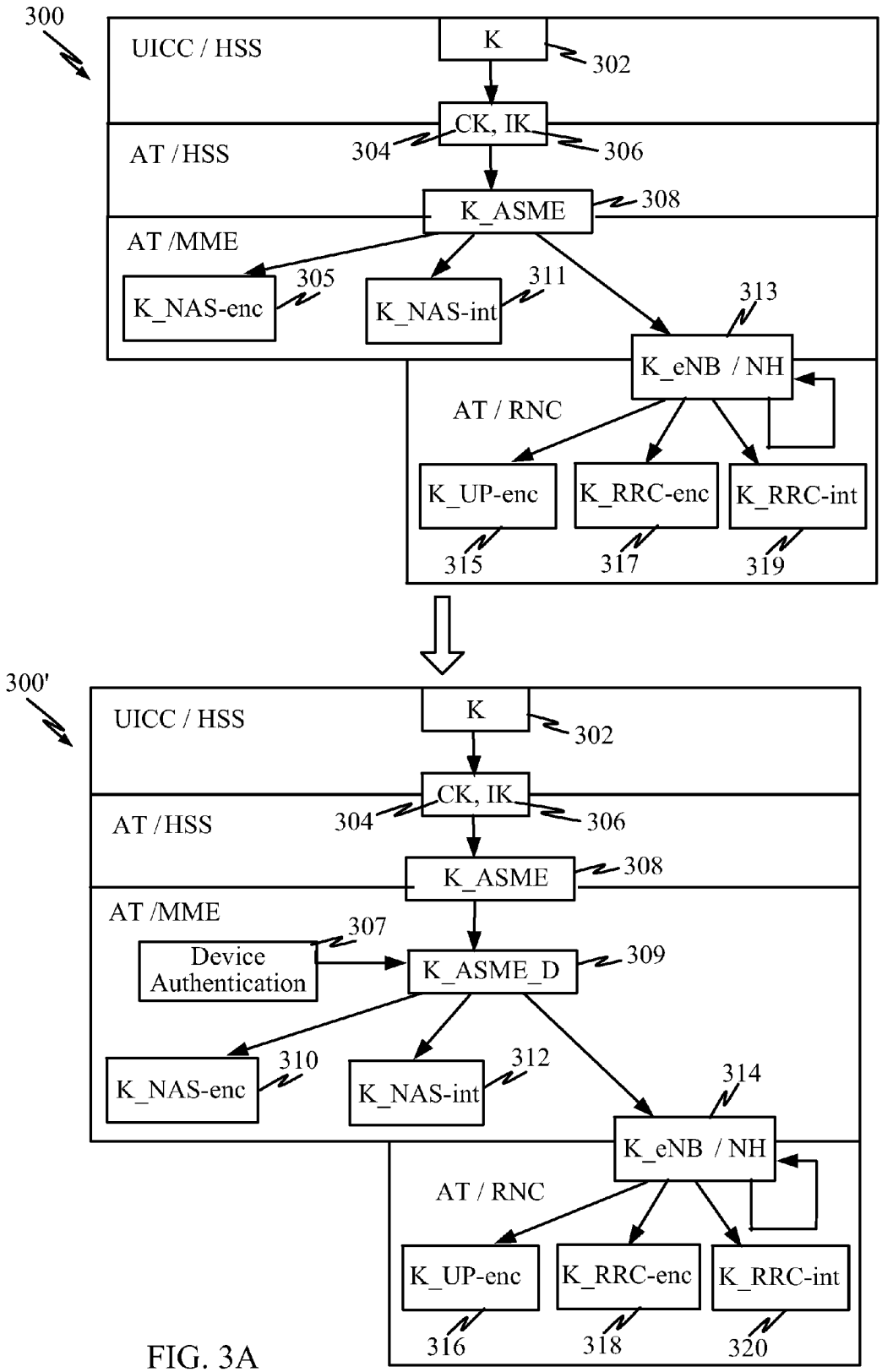
300
UICC / HSS
K
302
CK, IK
304
306
AT / HSS
K_ASME
308
AT /MME
K_NAS-enc
305
K_NAS-int
311
313
K_eNB / NH
AT / RNC
K_UP-enc
K_RRC-enc
K_RRC-int
315
317
319
300'
UICC / HSS
K
302
CK, IK
304
306
AT / HSS
K_ASME
308
AT /MME
Device Authentication
307
K_ASME_D
309
K_NAS-enc
310
K_NAS-int
312
314
K_eNB / NH
AT / RNC
K_UP-enc
K_RRC-enc
K_RRC-int
316
318
320

FIG. 3A

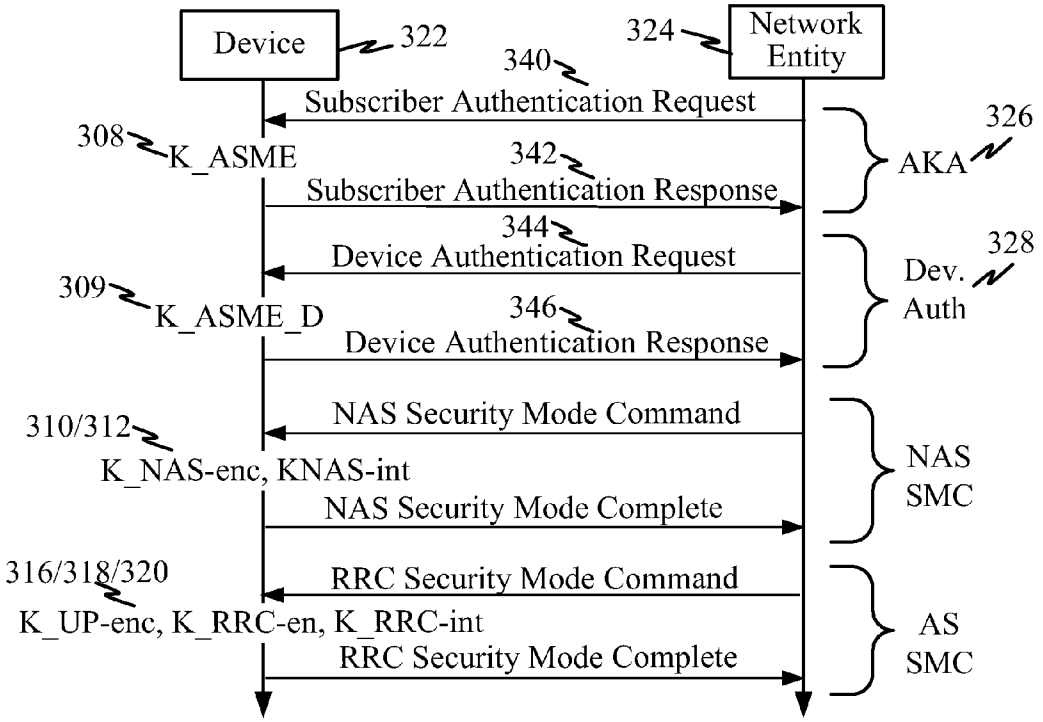
Device
322
324
Network Entity
340
Subscriber Authentication Request
308
K_ASME
342
Subscriber Authentication Response
326
AKA
344
Device Authentication Request
328
Dev. Auth
309
K_ASME_D
346
Device Authentication Response
NAS Security Mode Command
310/312
K_NAS-enc, KNAS-int
NAS Security Mode Complete
NAS SMC
316/318/320
RRC Security Mode Command
K_UP-enc, K_RRC-en, K_RRC-int
RRC Security Mode Complete
AS SMC

FIG. 3B

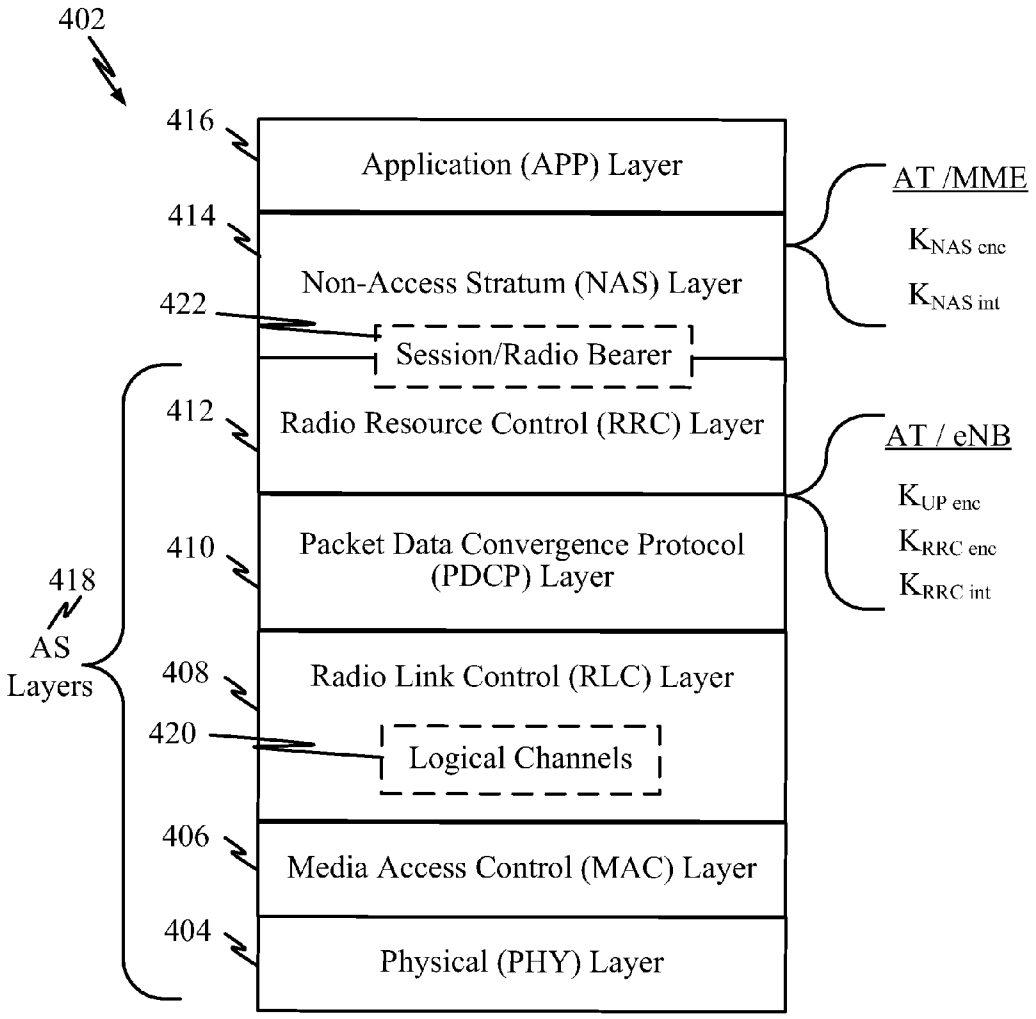
402
416
Application (APP) Layer
414
Non-Access Stratum (NAS) Layer
422
Session/Radio Bearer
412
Radio Resource Control (RRC) Layer
410
Packet Data Convergence Protocol (PDCP) Layer
408
Radio Link Control (RLC) Layer
420
Logical Channels
406
Media Access Control (MAC) Layer
404
Physical (PHY) Layer
418
AS Layers
AT /MME
$K_{NAS\ enc}$
$K_{NAS\ int}$
AT / eNB
$K_{UP\ enc}$
$K_{RRC\ enc}$
$K_{RRC\ int}$

FIG. 4

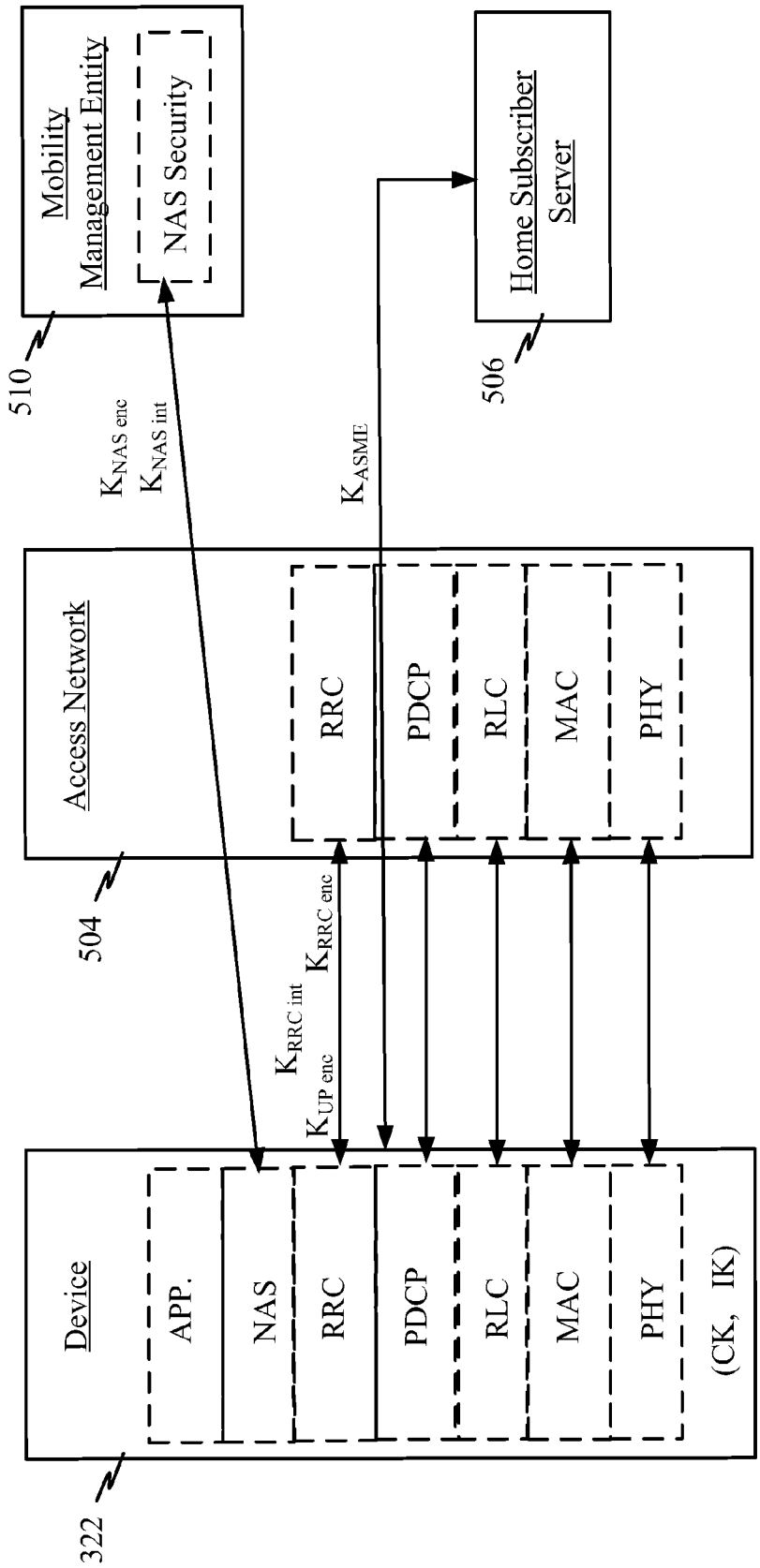
Mobility Management Entity
NAS Security
510
Home Subscriber Server
506
$K_{NAS\ enc}$
$K_{NAS\ int}$
K_{ASME}
Access Network
RRC
PDCP
RLC
MAC
PHY
504
$K_{RRC\ int}$
$K_{RRC\ enc}$
$K_{UP\ enc}$
Device
APP.
NAS
RRC
PDCP
RLC
MAC
PHY
(CK, IK)
322

FIG. 5

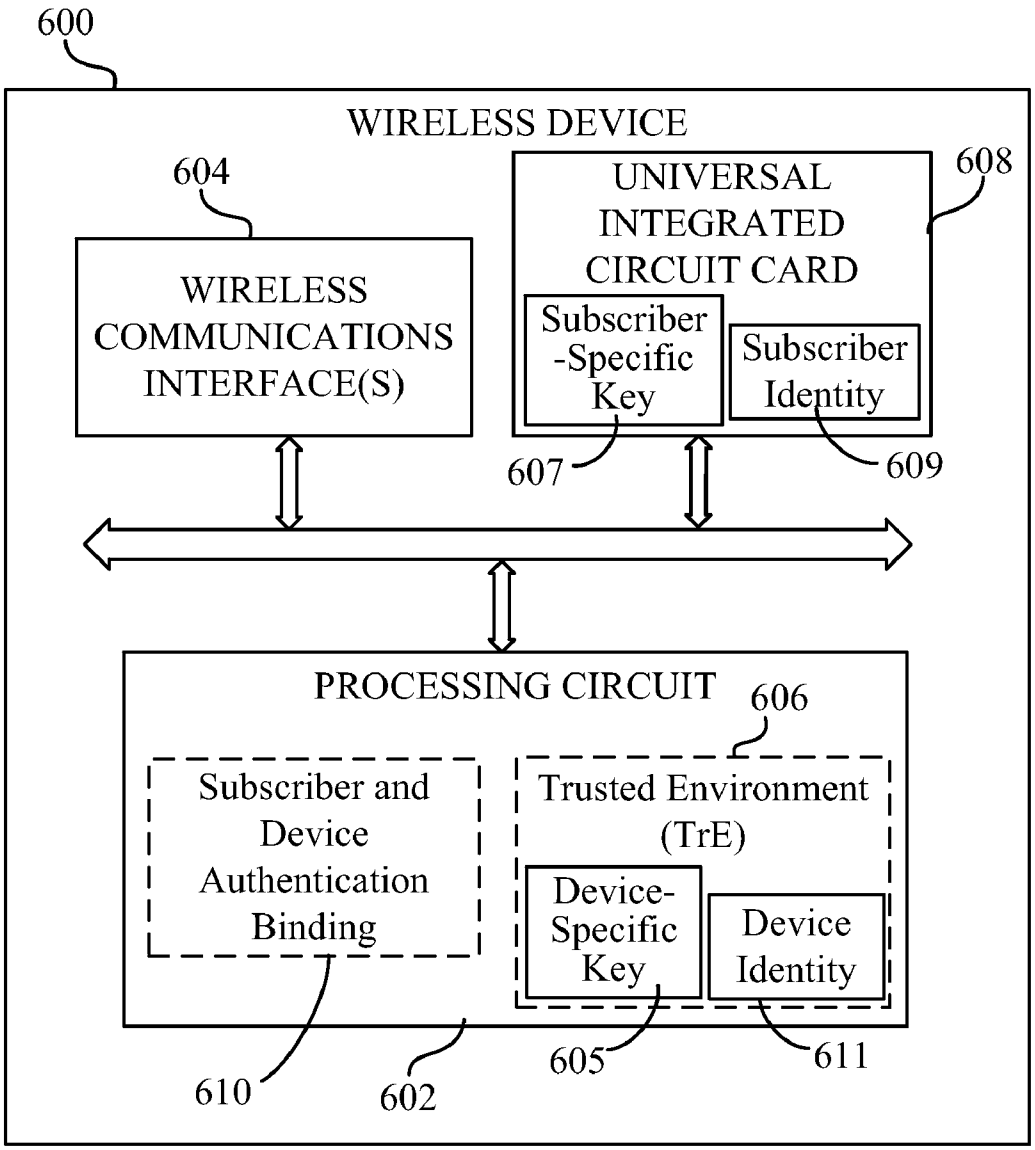
600
WIRELESS DEVICE
604
WIRELESS COMMUNICATIONS INTERFACE(S)
UNIVERSAL INTEGRATED CIRCUIT CARD
608
Subscriber -Specific Key
Subscriber Identity
607
609
PROCESSING CIRCUIT
606
Subscriber and Device Authentication Binding
Trusted Environment (TrE)
Device-Specific Key
Device Identity
610
602
605
611

FIG. 6

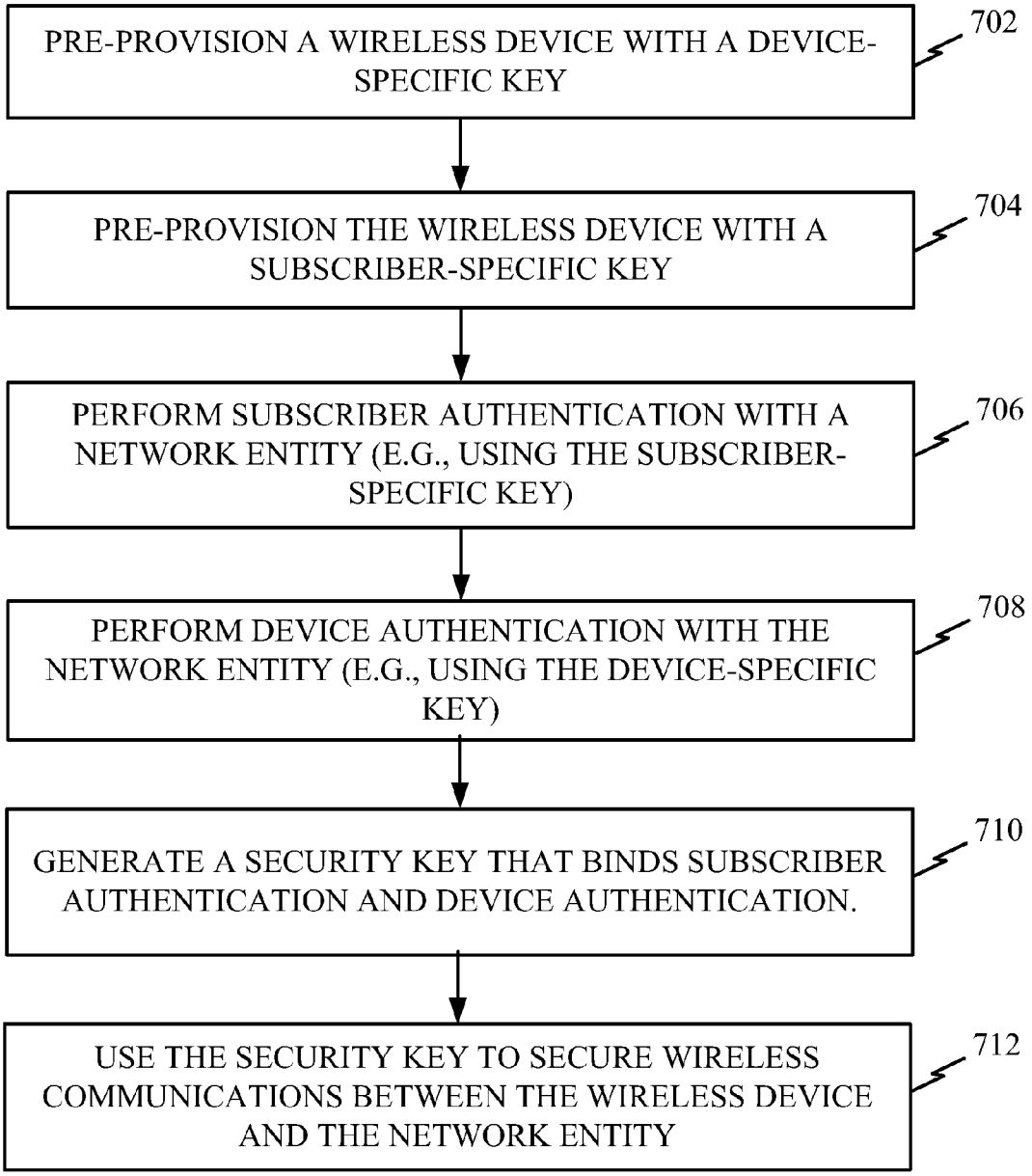
PRE-PROVISION A WIRELESS DEVICE WITH A DEVICE-SPECIFIC KEY
702
PRE-PROVISION THE WIRELESS DEVICE WITH A SUBSCRIBER-SPECIFIC KEY
704
PERFORM SUBSCRIBER AUTHENTICATION WITH A NETWORK ENTITY (E.G., USING THE SUBSCRIBER-SPECIFIC KEY)
706
PERFORM DEVICE AUTHENTICATION WITH THE NETWORK ENTITY (E.G., USING THE DEVICE-SPECIFIC KEY)
708
GENERATE A SECURITY KEY THAT BINDS SUBSCRIBER AUTHENTICATION AND DEVICE AUTHENTICATION.
710
USE THE SECURITY KEY TO SECURE WIRELESS COMMUNICATIONS BETWEEN THE WIRELESS DEVICE AND THE NETWORK ENTITY
712

FIG. 7

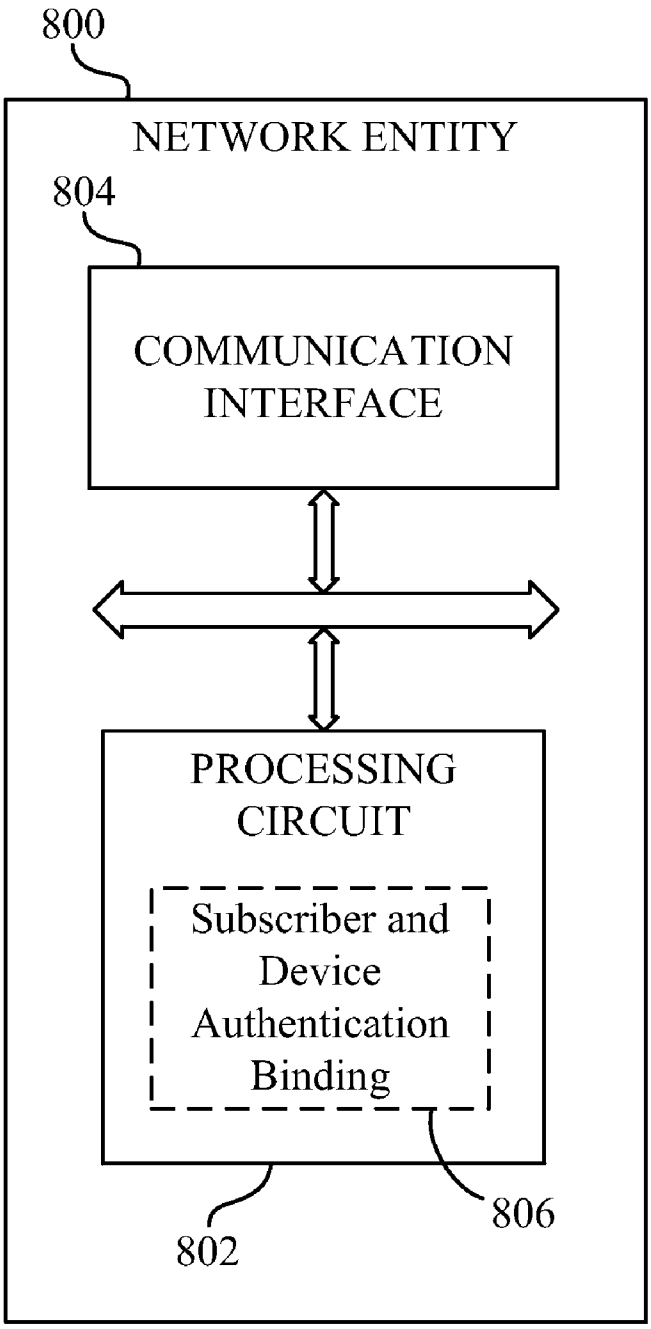
800
NETWORK ENTITY
804
COMMUNICATION INTERFACE
PROCESSING CIRCUIT
Subscriber and Device Authentication Binding
802
806

FIG. 8

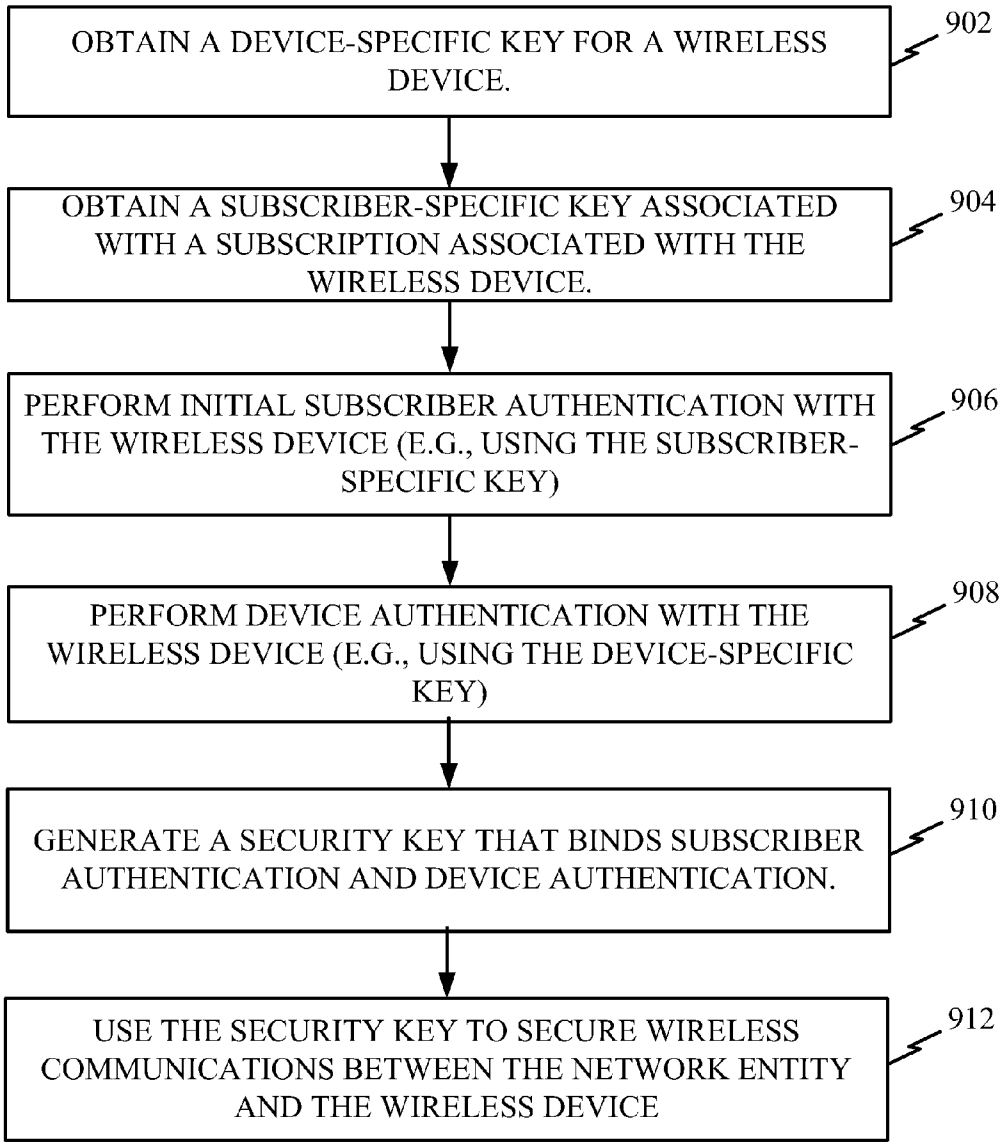
OBTAIN A DEVICE-SPECIFIC KEY FOR A WIRELESS DEVICE.
902
OBTAIN A SUBSCRIBER-SPECIFIC KEY ASSOCIATED WITH A SUBSCRIPTION ASSOCIATED WITH THE WIRELESS DEVICE.
904
PERFORM INITIAL SUBSCRIBER AUTHENTICATION WITH THE WIRELESS DEVICE (E.G., USING THE SUBSCRIBER-SPECIFIC KEY)
906
PERFORM DEVICE AUTHENTICATION WITH THE WIRELESS DEVICE (E.G., USING THE DEVICE-SPECIFIC KEY)
908
GENERATE A SECURITY KEY THAT BINDS SUBSCRIBER AUTHENTICATION AND DEVICE AUTHENTICATION.
910
USE THE SECURITY KEY TO SECURE WIRELESS COMMUNICATIONS BETWEEN THE NETWORK ENTITY AND THE WIRELESS DEVICE
912

FIG. 9

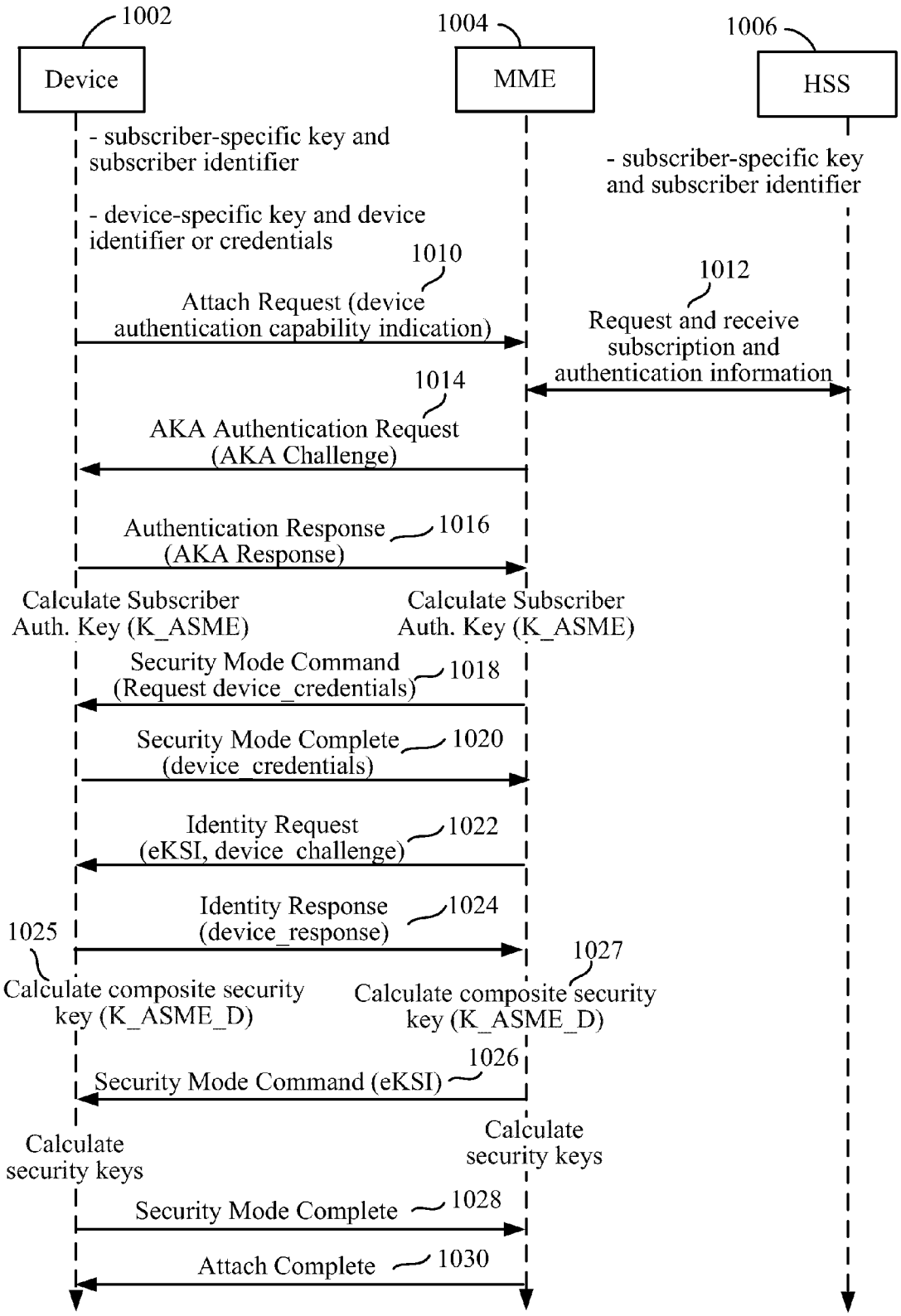
1002
Device
1004
MME
1006
HSS
- subscriber-specific key and subscriber identifier
- device-specific key and device identifier or credentials
- subscriber-specific key and subscriber identifier
1010
Attach Request (device authentication capability indication)
1012
Request and receive subscription and authentication information
1014
AKA Authentication Request (AKA Challenge)
Authentication Response (AKA Response)
1016
Calculate Subscriber Auth. Key (K_ASME)
Calculate Subscriber Auth. Key (K_ASME)
Security Mode Command (Request device_credentials)
1018
Security Mode Complete (device_credentials)
1020
Identity Request (eKSI, device_challenge)
1022
Identity Response (device_response)
1024
1025
Calculate composite security key (K_ASME_D)
1027
Calculate composite security key (K_ASME_D)
1026
Security Mode Command (eKSI)
Calculate security keys
Calculate security keys
Security Mode Complete
1028
Attach Complete
1030

FIG. 10

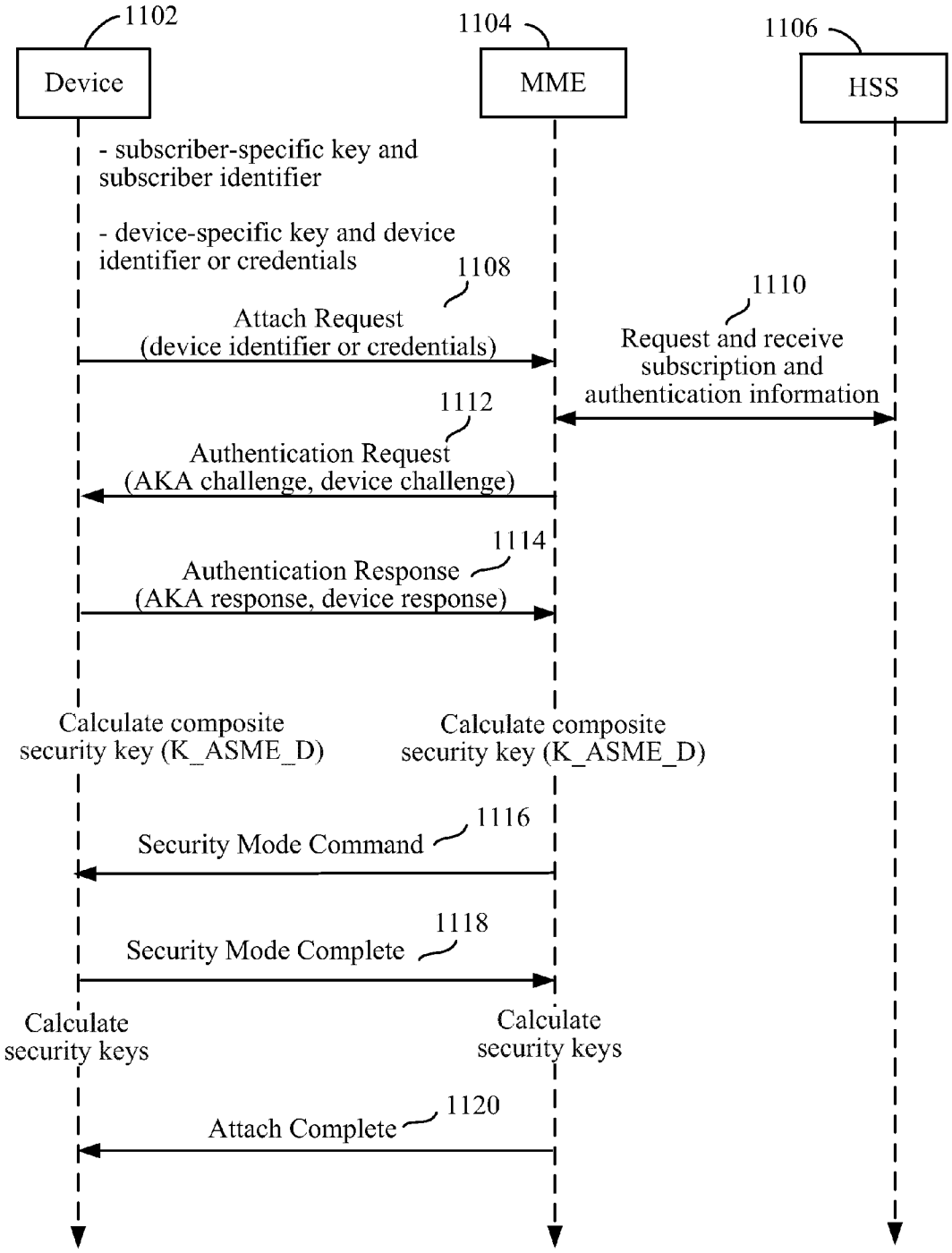
1102
Device
1104
MME
1106
HSS
- subscriber-specific key and subscriber identifier
- device-specific key and device identifier or credentials
1108
Attach Request
(device identifier or credentials)
1110
Request and receive subscription and authentication information
1112
Authentication Request
(AKA challenge, device challenge)
1114
Authentication Response
(AKA response, device response)
Calculate composite security key (K_ASME_D)
Calculate composite security key (K_ASME_D)
1116
Security Mode Command
1118
Security Mode Complete
Calculate security keys
Calculate security keys
1120
Attach Complete

FIG. 11

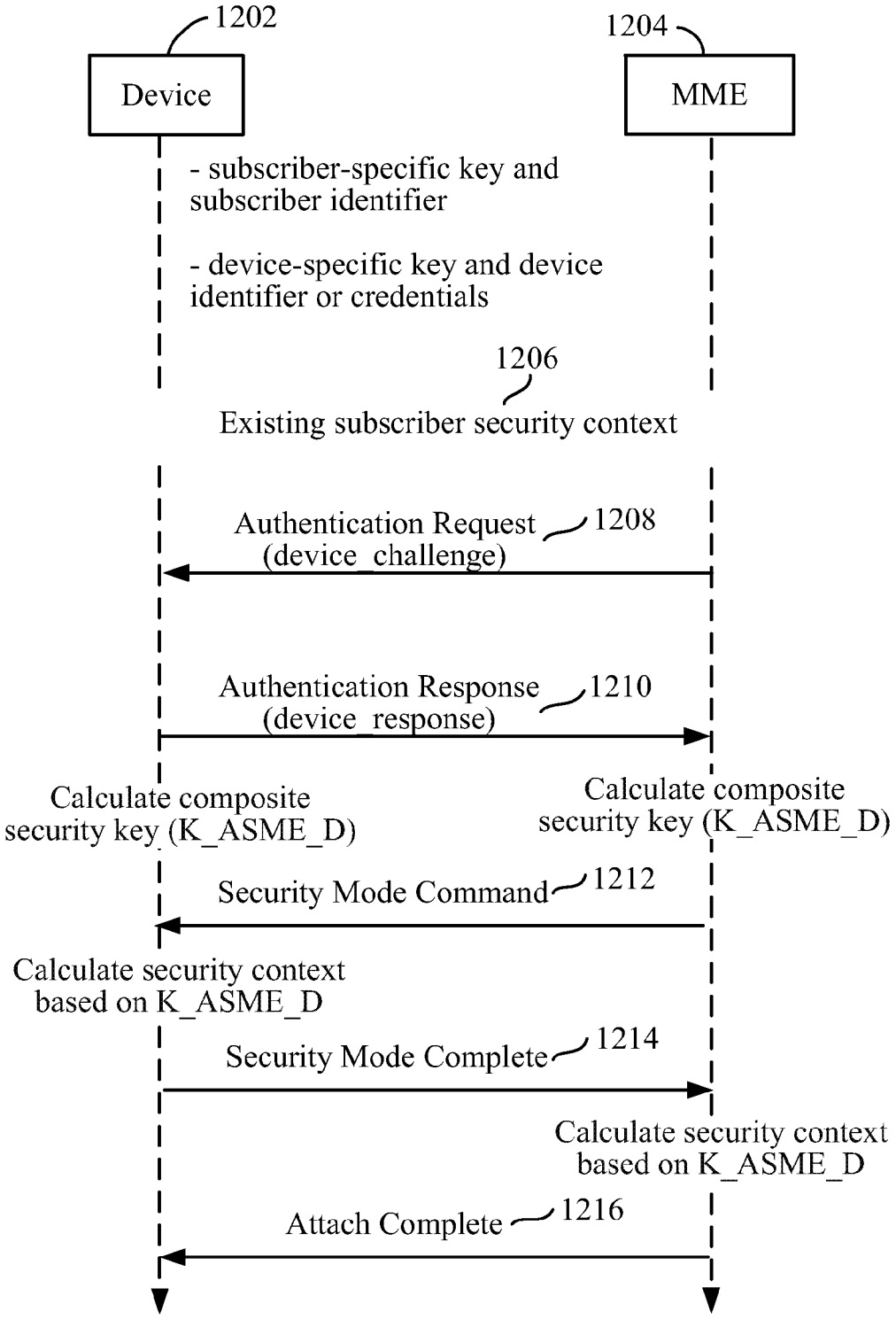
1202
Device
1204
MME
- subscriber-specific key and subscriber identifier
- device-specific key and device identifier or credentials
1206
Existing subscriber security context
Authentication Request (device_challenge)
1208
Authentication Response (device_response)
1210
Calculate composite security key (K_ASME_D)
Calculate composite security key (K_ASME_D)
Security Mode Command
1212
Calculate security context based on K_ASME_D
Security Mode Complete
1214
Calculate security context based on K_ASME_D
Attach Complete
1216

FIG. 12

METHOD AND APPARATUS FOR BINDING SUBSCRIBER AUTHENTICATION AND DEVICE AUTHENTICATION IN COMMUNICATION SYSTEMS

CLAIM OF PRIORITY UNDER 35 U.S.C. §119

[0001] The present application for patent claims priority to U.S. Provisional Application No. 61/355,423 entitled "Apparatus and Method for Device Authentication in 3GPP Systems" filed Jun. 16, 2010, and assigned to the assignee hereof and hereby expressly incorporated by reference herein.

BACKGROUND

[0002] 1. Field

[0003] Various features relate to communications systems and, more particularly, to the authentication of devices, such as relay nodes and machine-to-machine devices, employed in a wired and/or wireless communications system.

[0004] 2. Background

[0005] Modern wireless networks may include relay nodes and/or access terminals, cumulatively referred to here as devices. In order for such a device to function properly, the device is often provisioned/configured with operational and subscriber security credentials before the device is put into operation. Such subscriber security credentials may be used to, for example, authenticate the device prior providing wireless service or access and, in some cases, may be stored in a module that irremovably couples to its host device. A risk exists that subscriber security credentials may be removed from an authenticated device and placed in an unauthorized device. In the case of a relay node, this may allow an unauthorized relay node to surreptitiously access transmissions, for example, between an access node and one or more access terminals and/or to obtain free access to network services. This risk or vulnerability also exists in the case of machine-to-machine (M2M) devices in that valid subscriber credentials (e.g., authentication and key agreement—(AKA) parameters in a removable Universal Integrated Circuit Card (UICC)) in a M2M device could be transferred to another device in order to gain free network access. A related vulnerability exists in that it is not necessary to have physical access to the M2M device itself. Access to the data (e.g., the security keys resulting from authentication) that is going across a M2M device interface (e.g., host device to UICC interface) is sufficient to gain access to security keys and expose data secured by said keys.

[0006] A similar issue exists if an operator wishes to control which devices are allowed to access their network.

[0007] Consequently, there is a need to provide additional security for devices to address these and other vulnerabilities and risks.

SUMMARY

[0008] A method and apparatus are provided for securing a device by binding subscriber authentication and device authentication to generate a security key.

[0009] According to a first aspect, a method operational in a device is provided that binds subscriber and device authentication. The device may start by sending an attach request to the network entity, the attach request including an indication of device authentication capabilities of the device. Subscriber authentication may be performed by the device with a network entity. For instance, subscriber authentication may be based on an authentication key agreement exchange between the device and the network entity. The device may also perform device authentication with the network entity. For instance, device authentication may be based on a challenge-response exchange between the device and the network entity.

[0010] A security key may then be generated that binds the subscriber authentication and the device authentication. The security key may be generated as a function of at least a first key obtained from subscriber authentication and a second key obtained from device authentication. Additionally, the security key may also be a function of a network nonce and a device nonce. The security key may then be used to secure communications between the device and a serving network. Note that the security key may be separately generated by the device and the network entity, so it is not transmitted over the air.

[0011] According to one implementation, subscriber authentication may be performed by a first authentication server that is part of the network entity, while device authentication may be performed by a second authentication server that is part of the network entity.

[0012] In one example, device authentication may be performed by using a shared secret key to encrypt/decrypt certain exchanges between the device and the network entity. In another example, device authentication may be performed by: (a) receiving data from the network entity that is encrypted with a public key of the device; (b) using a corresponding private key to decrypt the encrypted data; and/or (c) subsequently proving to the network entity that the device has knowledge of the data.

[0013] According to one aspect, device authentication may be secured by at least one key generated during the subscriber authentication.

[0014] In various implementations, subscriber authentication and device authentication may be concurrently performed in combined message exchanges or subscriber authentication may be performed in an earlier and separate security exchange from the device authentication.

[0015] According to one feature, a subscriber-specific key may be provisioned on the device as part of a service agreement, where the subscriber-specific key is used for the subscriber authentication. Similarly, a device-specific key may be provisioned in the device during manufacturing, where the device-specific key is used for the device authentication.

[0016] In one implementation, device may be a relay node that appears as an access terminal to the network entity and appears as a network device to one or more access terminals. In another implementation, the device may be an access terminal.

[0017] According to one example, the device may include a communication interface coupled to a processing circuit. The processing circuit may be adapted to: (a) perform subscriber authentication with a network entity; (b) perform device authentication of the device with the network entity; (c) generate a security key that binds the subscriber authentication and the device authentication; and/or (d) use the security key to secure communications between the device and a serving network.

[0018] According to yet another example, a processor-readable medium comprising instructions operational on a device may be provided. When executed by a processor, these instructions may causes the processor to: (a) perform subscriber authentication with a network entity; (b) perform device authentication of the device with the network entity;

(c) generate a security key that binds the subscriber authentication and the device authentication; and/or (d) use the security key to secure communications between the device and a serving network.

[0019] According to another aspect, method operational in a network entity is provided. The network entity may receive an attach request from the device, the attach request including an indication of device authentication capabilities of the device. The network entity may perform subscriber authentication with a device. Likewise, the network entity may perform device authentication of the device. A security key may then be generated by the network entity that binds the subscriber authentication and the device authentication. The security key may then be used to secure communications between the network entity and the device. Note that, to prevent over the air transmission of the security key, the security key may be separately generated by the device and the network entity.

[0020] In one example, subscriber authentication may be based on an authentication key agreement exchange between the network entity and the device. Device authentication may be based on a challenge-response exchange between the network entity and the device.

[0021] In one implementation, device authentication may include: (a) receiving a certificate from the device; and (b) verifying the certificate associated with the device has not been revoked.

[0022] In one implementation, so as to prevent snooping during the device authentication process, device authentication may be secured by at least one key generated during an earlier subscriber authentication.

[0023] According to various examples, subscriber authentication and device authentication may be concurrently performed in combined message exchanges or authentication is performed in an earlier and separate security exchange from the device authentication.

[0024] In another example, the security key may be generated as a function of at least a first key obtained from subscriber authentication and a second key obtained from device authentication.

[0025] In one implementation, the network entity may obtain a subscriber-specific as part of a service agreement, the subscriber-specific key used for the subscriber authentication. Similarly, the network entity may obtain a device-specific key for the device, the device-specific key used for the device authentication.

[0026] In one implementation, the network entity may comprise a communication interface coupled to a processing circuit. The processing circuit may be adapted to: (a) perform subscriber authentication with a device; (b) perform device authentication of the device; (c) generate a security key that binds the subscriber authentication and the device authentication; and/or (d) use the security key to secure communications between the network entity and the device.

[0027] In one implementation, a processor-readable medium comprising instructions operational on a network entity is provided. When executed by a processor, these instructions may cause the processor to: (a) perform subscriber authentication with a device; (b) perform device authentication of the device; (c) generate a security key that binds the subscriber authentication and the device authentication; and/or (d) use the security key to secure communications between the network entity and the device.

BRIEF DESCRIPTION OF THE DRAWINGS

[0028] FIG. **1** is a block diagram illustrating a wireless communication system in which various types of wireless devices may be authenticated by a core network to obtain service.

[0029] FIG. **2** illustrates a general approach to binding a device authentication and subscriber authentication.

[0030] FIG. **3** (comprising FIG. **3**A and FIG. **3**B) illustrates an example of how a key hierarchy based on subscriber authentication may be modified to add device authentication.

[0031] FIG. **4** illustrates an exemplary protocol stack that may be implemented in a device operating in a packet-switched network.

[0032] FIG. **5** is a block diagram illustrating a network system in which the various authentication and/or security keys illustrated in FIGS. **3** and **4** may be generated.

[0033] FIG. **6** is a block diagram illustrating select components of a wireless device that may be adapted to bind subscriber authentication and device authentication.

[0034] FIG. **7** is a flow diagram illustrating an example of a method operational in a wireless device to generate a security key that binds subscriber authentication and device authentication.

[0035] FIG. **8** is a block diagram illustrating select components of a network entity that may be adapted to bind subscriber authentication and device authentication.

[0036] FIG. **9** is a flow diagram illustrating an example of a method operational in a network entity to generate a security key that binds subscriber authentication and device authentication.

[0037] FIG. **10** illustrates a first exemplary method for generating a security key by binding subscriber and device authentication.

[0038] FIG. **11** illustrates a second exemplary method for generating a security key by binding subscriber and device authentication.

[0039] FIG. **12** illustrates a third exemplary method for generating a security key by binding subscriber and device authentication.

DETAILED DESCRIPTION

[0040] In the following description, specific details are given to provide a thorough understanding of the described implementations. However, it will be understood by one of ordinary skill in the art that various implementations may be practiced without these specific details. For example, circuits may be shown in block diagrams in order not to obscure the implementations in unnecessary detail. In other instances, well-known circuits, structures and techniques may be shown in detail in order not to obscure the described implementations.

[0041] The word "exemplary" is used herein to mean "serving as an example, instance, or illustration." Any implementation or embodiment described herein as "exemplary" is not necessarily to be construed as preferred or advantageous over other embodiments or implementations. Likewise, the term

"embodiments" does not require that all embodiments include the discussed feature, advantage or mode of operation.

Overview

[0042] An authentication method is provided between a device (e.g., a client device or access terminal) and a network entity. A removable storage device may be coupled to the device and stores a subscriber-specific key that may be used for subscriber authentication. A secure storage device may be coupled to the device and stores a device-specific key used for device authentication. Subscriber authentication may be performed between the device and a network entity. Device authentication may also be performed of the device with the network entity. A security key may then be generated that binds the subscriber authentication and the device authentication. That is, a key, data, and/or information from the subscriber authentication process and a key, data, and/or information from the device authentication process may be combined to generate the (composite) security key. The security key may be used to secure communications between the device and a serving network.

Exemplary Network Environment

[0043] FIG. **1** is a block diagram illustrating a wireless communication system in which various types of wireless devices may be authenticated by a core network to obtain service. This wireless communication system may be, for example, a Universal Mobile Telecommunications System (UMTS) compliant network or a compatible network or a Global System for Mobile communication (GSM)-compatible network or a Global System for Mobile communication (GSM)-compatible network. While some of the examples described herein may pertain to a Long Term Evolution (LTE) network, the various features described herein may be implemented in other networks as well.

[0044] The system may include one or more devices **101**, such as access terminals **103**/**104** and relay node **102**, that communicate with an access node **106**. The relay node **102** may facilitate wireless transmissions between a wireless communication network **106**/**108** and one or more access terminals **104**. The wireless communications system (e.g., a Long Term Evolution (LTE) network, LTE-Advanced network, etc.) may comprise a core network **108** and one or more access nodes **106**. The access node **106** can be coupled to the core network **108** via a backhaul link (e.g., a wired connection). The core network **108** may include, for example, a mobile management entities (MME) **110**, a home subscriber server (HSS) **112** and/or other components.

[0045] In one example, a mobile management entity (MME) **110** may be involved in bearer activation/deactivation for the device **101**, relay node **102**, and/or access terminals **103**/**104** (hereinafter generically called "device") and assisting with authentication by interacting with the Home Subscriber Server (HSS) **112**. The MME **110** may also generate and/or allocate temporary identities to the devices (e.g., device **101**, relay node **102**, access terminals **103**/**104**, etc.). It may check the authorization of the device to camp on (e.g., obtain service from, connect to, setup a communication link with) a service provider's Public Land Mobile Network (PLMN) and may enforce the device's roaming restrictions. The MME **110** may be the termination point in the network for ciphering/integrity protection for Non Access Stratum (NAS) signaling and handles security key management. The MME **110** may also perform track and/or paging procedures (including retransmissions) for the devices coupled to the core network **108**.

[0046] The Home Subscriber Server (HSS) **112**, is a master subscriber database that supports the network entities that actually handle devices. It may contain the subscription-related information (subscriber profiles), help perform authentication and authorization of the subscription, and can provide information about the subscriber's location. It is similar to the GSM Home Location Register (HLR) and Authentication Centre (AuC). The Home Location Register (HLR) may be a database that contains details of each subscriber that is authorized to use the core network. The HLR may assist the AuC in authenticating the subscribers (i.e., using the user terminals).

[0047] The relay node **102** may be adapted to amplify and/or repeat a signal between the access terminal **104** and the access node **106**. In general, the relay node **102** can appear to the access terminal **104** as an access node (AN) and can appear to the access node **106** as an access terminal (AT). For instance, the relay node **102** may include an access terminal interface **105** with which it communicates with the access node **106** and may also include an access node interface **107** with which it communicates with the access terminal **104**. That is, the access terminal interface **105** may make the relay node appear as an access terminal to the access node **106**. Similarly, the access node interface **107** may make the relay node **102** appear as an access node to the access terminal **104**. In some implementations, the relay node **102** may translate signals from a first format to a second format between the access terminal interface **105** and the access node interface **107**. The relay node **102** might be placed near the edges of a cell so that the access terminal **104** can communicate with the relay node **102** rather than communicating directly with the access node **106**.

[0048] In radio systems, a cell is a geographical area of reception and transmission coverage. Cells can overlap with each other. In the typical example, there is one access node associated with each cell. The size of a cell is determined by factors such as frequency band, power level, and channel conditions. Relay nodes, such as relay node **102**, can be used to enhance coverage within or near a cell, or to extend the size of coverage of a cell. Additionally, the use of a relay node **102** can enhance throughput of a signal within a cell because the access terminal **104** can access the relay node **102** at a higher data rate or a lower transmission power than the access terminal **104** might use when communicating directly with the access node **106** for that cell. Transmission at a higher data rate creates higher spectrum efficiency, and lower power benefits the access terminal **104** by consuming less battery power, for example.

[0049] In some examples, the relay node **102** may be implemented as one of three relay types: a layer one relay node, a layer two relay node, and/or a layer three relay node. A layer one relay node is essentially a repeater that can retransmit a transmission without any modification other than amplification and slight delay. A layer two relay node can decode a transmission that it receives, re-encode the result of the decoding, and then transmit the re-encoded data. A layer three relay node can have full radio resource control capabilities and can thus function similarly to an access node. The radio resource control protocols used by a relay node may be the same as those used by an access node, and the relay node may have a unique cell identity typically used by an access node.

For the purpose of this disclosure, a relay node **102** is distinguished from an access node **106** by the fact that the relay node **102** may rely on the presence of at least one access node **106** (and the cell associated with that access node) or other relay node to access other components in a telecommunications system (e.g., the network **108**). That is, the relay node **102** may appear as a subscriber device, client device, or access terminal to the network, therefore it connects to an access node to communicate over the network **108**. However, to other subscriber devices, user devices, and/or access terminals **104**, the relay node **102** may appear as a network device (e.g., an access node). Consequently, the relay node **102** may implement one or more communication interfaces to communicate with an access node and/or one or more access/subscriber/user terminals. In one example, the same transmitter/receiver (e.g., in one or more wireless channels) may be used by the relay node **102** to communicate with its access node and/or one or more access terminals. In another example, the relay node **102** may utilize two or more different transmitters/receivers to communicate with the access node and/or the one or more access terminals.

[0050] To mitigate misuse of a subscription to access network services, the devices may bind device authentication with subscriber authentication. Device authentication may work in conjunction with, for example, a standard 3GPP AKA (authentication and key agreement) access authentication based on credentials (such as a subscriber root key K) that are stored in a Universal Integrated Circuit Card (UICC) **109**, **111**, **113**, and **116** or universal subscriber identification module (e.g., USIM) removably coupled to the device. In some embodiments, device authentication may be carried out in the same Non-Access Stratum (NAS) messages that are used for AKA authentication. In this manner, the device (e.g., the relay node **102**, access terminals **103**/**104**, etc.) may be bound to its subscription (i.e., service subscription with the core network **108**) so as to prevent others from using its subscriber credentials (i.e., for a subscription service) in an unauthorized device.

[0051] One solution to the risk of unauthorized use of subscriber credentials is for the device (e.g., device **101**, relay node **102** or access terminals **103**/**104**) and UICC **109** to mutually authenticate each other (e.g., using secure channel between the host device and UICC), but that may require pre-provisioning a UICC **109**, **111**, **113**, and **116** and/or the host device (e.g., device **101**, relay node **102** or access terminals **103**/**104**) with information to perform such mutual authentication.

[0052] Another solution may be to require that the keys used for network access (e.g., keys used to protect the traffic between the device and the network) depend on both credentials stored on the UICC **109**, **111**, **113**, and **116** as well as the credentials stored on the device (e.g., device **101** relay node **102** or access terminals **103**/**104**). This may be accomplished by binding the AKA authentication keys with the device authentication in some way. This solution is also useful in the case of International Mobile Equipment Identity (IMEI) authentication (which for example may allow an operator to stop unauthorized devices from attaching to their network). This is because, by binding the key(s) resulting from the AKA authentication used for network access with the keys used for the device authentication, it is assured that all the messages originating from the device to the network **108** indeed originate from the device that was authenticated. Under the assumption that the bound keys (and all other subsequent keys derived from the bound key) are stored securely on the device (e.g., device **101**, relay node **102**, or access terminals **103**/**104**), binding of the keys from AKA authentication with device authentication provides a stronger security than using challenge/response based mechanism alone for the device authentication. Using a challenge/response mechanism alone for device authentication only proves that the device was present to generate the authentication response, but not that it remains present at a subsequent time.

[0053] FIG. **2** illustrates a general approach to binding a device authentication and subscriber authentication. The device **202** (e.g., device **101**, relay node **102** or access terminals **103**/**104**) may be provisioned with a subscriber_root_key **206** and/or a subscriber_identity **207** that can be used to authenticate a subscription with the core network **108** and/or generate security keys used to access encrypted traffic sent to the device **202**. The subscriber_root_key **206** may be uniquely associated with the subscriber_identity **207**. In one example, the subscriber_root_key **206** and/or a subscriber_identity **207** may be stored in the UICC **204** and/or subscriber authentication may be processed by the UICC **204**. Similarly, device **202** may be provisioned with (or stores) a device_root_key **208** and/or a device_identity **209** that can be used to authenticate the device with the core network **108**. The device_root_key **208** may be uniquely associated with the device_identity **209**.

[0054] In one example, the device_identity **209** may be an International Mobile Equipment Identity (IMEI) of the device **202** (e.g., device **101**, relay node **102** or access terminals **103**/**104**), but other forms of identity associated with the device (e.g., IEEE Hardware address such as EUI-48 or EUI-64) may also be used.

[0055] In some implementations, the device_root_key **208** may be a secret key shared by the device **202** only with the core network **108** but not transmitted over the air. The device_identity **209** may be transmitted by the device **202** to the core network **108** so that it can obtain the correct device_root_key to be used in device authentication. Alternatively, the device_root_key **208** may be a public key of a public/private key pair, where certificates are used for device authentication. For example, device may receive some data from the network, where the data is encrypted with the public key. The device may then use its private key to decrypt the encrypted data and subsequently prove to the network that it has knowledge of the data. The certificate (e.g., device_credentials) may be verified by the core network **108**. The associated private key of the device **202** may be stored securely in the device **202**. The device_credentials may refer to either the device certificate or a pointer to it. These device_credentials may allow the relevant network entity to form the device_challenge and to check the revocation status of the device **202** (e.g., check whether the credentials such as the private key or the shared key associated with the device is compromised). It is further assumed that a secure part of the device (such as a Trusted Environment or TrE as defined in 3GPP Technical Specification 33.320) stores the sensitive device keys, such as the device_root_key and/or the private key associated with the certificate. Furthermore, it is assumed that the TrE performs all cryptographic operations that make use of these keys.

[0056] Initially, subscriber authentication may take place between the device **202** and the network **108**. For instance, an authentication and key agreement (AKA) exchange **210** between the device **202** and network **108** may result in establishing a key K_ASME. Such AKA exchange **210** may be

based, for example, on the subscriber_root key **206** and/or the subscriber_identity **207** to authenticate a subscriber associated with the device **202**. For instance, such subscription information or credentials may be securely stored in the UICC **204** which is removably coupled to the host device **202**.

[0057] The network **108** may also perform device authentication on the device **202**. The device_identity **209** may be provided to the core network **108** by the device **202** so that the core network **108** can look-up or obtain the correct corresponding device_root_key **208**. The network **108** may create a device_challenge **212** and sends it to the device **202** (e.g., as part of a relevant NAS message). In response, the device **202** computes the device_response **214** (e.g., based on the device_challenge and device_root_key **208** or derivative thereof) and returns it to the network **108**. The device **202** may use the data in device_challenge and device_response to calculate a composite security key K_ASME_D **216**. Note that, in the case of the device **202**, the composite security key K_ASME_D **216** may be generated either before or after the device_response **214** is sent. In one example, the composite security key K_ASME_D may be the equivalent key to security key K_ASME defined in Evolved Universal Terrestrial Radio Access Network E-UTRAN (E-UTRAN) defined in 3GPP Technical Specification 33.401, except that the key K_ASME_D is bound to the device_identity **209** as well to a key resulting from AKA authentication, such as the K_ASME key. If the network **108** receives a valid device_response, the network **108** also calculates the composite security key K_ASME_D **218**.

[0058] The calculation of device_challenge **212**, device_response **214** and the composite security key K_ASME_D may be as follows. The device_challenge **212** may be calculated as:

device_challenge=eKSI, [E_device_root_key (device_temp_key)], network_nonce,

where eKSI is an evolved/extended key set identifier that will be associated with K_ASME_D, [. . .] denotes an optional parameter, E_k (data) means data encrypted with key k, and network_nonce is a suitable size random number (e.g., 128-bits) chosen by the network. The encryption algorithm can be either asymmetric (in the case the device_root_key is a public key associated with a device certificate) or symmetric (in the case the device_root_key is a shared key). The device_temp_key may be a key that is obtained or generated as part of device authentication. In one example, the device_temp_key may be chosen (e.g., randomly) by the network **108**, is sent to the device **202** in an encrypted form, and is of appropriate length (e.g., 256 or 128-bit value).

[0059] Both the device **202** and the network **108** may keep the device_temp_key between network accesses for optimization purposes. If this is not the case, the second parameter ([E_device_root_key (device_temp_key)]) in the device challenge **212** is not optional.

[0060] The device_response **214** may be calculated as:

device_response=device_nonce, device_res,

where device_nonce is a suitable size random number (e.g., 128-bits) chosen by the device and

device_res=KDF(device_temp_key, network_nonce, device_nonce)

where KDF is a cryptographic function suitable for generating the response device_res.

[0061] Having previously obtained an authentication key K_ASME (e.g., as part of AKA exchange **210**), the calculation of a composite security key K_ASME_D **216** and **218** (i.e., binding device authentication and subscriber authentication), may be done as follows:

K_ASME_D=KDF(device_temp_key, K_ASME, network_nonce, device_nonce)

where K_ASME may be a key or value obtained during subscriber authentication between the device and the network (as a result of the AKA authentication exchange **210**). In one example, the K_ASME key may be a key that is previously generated and/or used between device **202** and the network **108**. Alternatively, if the device authentication process **212** and **214** is being performed using the same NAS messages as the NAS messages used for the AKA procedure **210**, the K_ASME key may be newly or concurrently generated. Similarly, device_temp_key may be a key or value obtained during device authentication between the device **202** and the network **108**.

[0062] The composite security key may then be used as the basis and/or root for calculating additional security keys **217** and **219**. The additional security keys may serve to secure, for example, NAS-level and/or AS-level communications.

[0063] The composite security key K_ASME_D, associated security parameters, and all the keys derived from K_ASME_D may be held securely on the device **202** and are not stored on the UICC **204**. The composite security key K_ASME_D may then be used to secure messages exchanged **220** between the device **202** and the core network **108**.

[0064] FIG. **3** (comprising FIG. **3**A and FIG. **3**B) illustrates an example of how a key hierarchy based on subscriber authentication may be modified to also include device authentication. A key hierarchy may be implemented to establish the security parameters (e.g., a security key) for use in encrypting/decrypting communications between a device and a network. In this example, subscriber and device authentication may be performed between a device **322** and a network entity **324**. The device **322** may be an access terminal (AT), a user equipment (UE), a mobile phone, and/or a relay node, for example. The network entity **324** may be one or more network devices, such as a mobility management entity (MME) and/or home subscriber server (HSS).

[0065] This example illustrates how a first key hierarchy **300** based on subscriber authentication is modified to obtain a second key hierarchy **300'** based on both subscriber authentication and device authentication.

[0066] For purposes of subscriber authentication as illustrated in the first key hierarchy **300**, a Universal Integrated Circuit Card (UICC in the device **322**), and the network entity **324** (e.g., MME **110**, HSS **112** in FIG. **1**, or other network entity) may use a master key K **302** to generate a cipher key (CK) **304** and integrity key (IK) **306**. The cipher key (CK) **304** and integrity key (IK) **306** may then be used by the device **322** and the network entity **324** as part of an authentication and key agreement (AKA) exchange to generate an Access Security Management Entity key K_ASME **308** (also referred herein as a subscriber authentication key). The security activation of the device **202** may be accomplished through an Authentication and Key Agreement procedure (AKA), a Non-Access Stratum (NAS) Security Mode Configuration (NAS SMC) procedure and an Access Stratum (AS) Security mode Configuration (AS SMC) procedure.

[0067] In this example, subscriber authentication may include the AKA exchange **326** that results in the K_ASME **308**. The AKA exchange **326** may include a subscriber authentication request **340** and a subscriber authentication response **342**. In this example, the subscriber authentication process that generates the K_ASME key **308** may also generate associated NAS-level keys (e.g., K_NAS-enc **305** and K_NAS-int **311**) and/or AS-level keys (e.g., K_UP-enc **315**, K_RRC-enc **317**, and K_RRC-int **319**). Note that, in some implementations, if these versions of the NAS-level keys and AS-level keys are not used, then the generation of these keys may be foregone during subscriber authentication.

[0068] The second key hierarchy **300'** illustrates how device authentication may be bound to subscriber authentication to generate NAS-level and AS-level security keys. Concurrently, prior, or subsequent to subscriber authentication (and generating its corresponding K_ASME key **308**), device authentication **328** may be performed based, at least partially, on a device-specific root key. Device authentication **328** may include a device authentication request **344** and a device authentication response **346**. In one implementation, device authentication **307** may be independent of subscriber authentication; only if both subscriber and device authentication are satisfied is a composite security key K_ASME_D **309** generated. In an alternative implementation, device authentication may be performed prior to subscriber authentication.

[0069] The composite security key K_ASME_D **309** may be used as a base key for the calculation of, for example, NAS (Non-Access Stratum) keys **310** and **312** and AS (Access Stratum) keys **314**, **316**, **318**, and **320**. That is, the device **322** and the network entity **324** may then use the K_ASME_D key **309** to generate one or more security keys.

[0070] Packet-switched networks may be structured in multiple hierarchical protocol layers, where the lower protocol layers provide services to the upper layers and each layer is responsible for different tasks. For example, FIG. **4** illustrates an exemplary protocol stack that may be implemented in a device operating in a packet-switched network. In this example, the protocol stack **402** includes a Physical (PHY) Layer **404**, a Media Access Control (MAC) Layer **406**, a Radio Link Control (RLC) Layer **408**, a Packet Data Convergence Protocol (PDCP) Layer **410**, a Radio Resource Control (RRC) Layer **412**, a Non-Access Stratum (NAS) Layer **414**, and an Application (APP) Layer **416**.

[0071] The layers below the NAS Layer **414** are often referred to as the Access Stratum (AS) Layer **418**. The RLC Layer **408** may include one or more channels **420**. The RRC Layer **412** may implement various monitoring modes for the access terminal, including connected state and idle state. The Non-Access Stratum (NAS) Layer **414** may maintain the communication device's mobility management context, packet data context and/or its IP addresses. Note that other layers may be present in the protocol stack **402** (e.g., above, below, and/or in between the illustrated layers), but have been omitted for the purpose of illustration.

[0072] Referring to FIG. **4**, radio/session bearers **422** may be established, for example at the RRC Layer **412** and/or NAS Layer **414**. Consequently, the NAS Layer **414** may be used by the device **202** and the core network **108** to generate the security keys K_NAS-enc **310** and K_NAS-int **312** shown in FIG. **3**. Similarly, the RRC Layer **412** may be used by the device **202** and the access node **108** to generate the Access Stratum (AS) security keys K_UP-enc **316**, K_RRC-enc **318**, and K_RRC-int **320**. While the security keys K_UP-enc **316**, K_RRC-enc **318**, and K_RRC-int **320** may be generated at the RRC Layer **312**, these keys may be used by the PDCP Layer **410** to secure signalling and/or user/data communications. For instance, the key K_UP-enc **316** may be used by the PDCP Layer **410** to secure for user/data plane (UP) communications, while the keys K_RRC-enc **318**, and K_RRC-int **320** may be used to secure signalling (i.e., control) communications at the PDCP Layer **410**.

[0073] In the derivation of these security keys, used for ciphering and integrity algorithms, both at the AS (User plane and RRC) and NAS requires that an individual algorithm identity be provided as one of the inputs. At the AS level, the algorithms to be used are provided by a Radio Resource Control (RRC) Security Mode Command.

[0074] FIG. **5** is a block diagram illustrating a network system in which the various authentication and/or security keys illustrated in FIGS. **3** and **4** may be generated. Here, the device **322** may implement a communication stack that includes various layers (e.g., APP, NAS, RRC, RLC, MAC, and PHY). An access network **504** (e.g., access node **106** in FIG. **1**) may provide wireless connectivity to the device **322** so that it may communicate with the network **108**. The home subscriber server **506** and device **322** may both know or have access to a root key (K) which can be used to generate or obtain a cipher key (CK) and/or an integrity key (IK). The device **322** and/or HSS **506** may then use the cipher key (CK) and/or integrity key (IK) to generate an Access Security Management Entity key K_ASME. Device authentication may also be performed and combined with or based on the K_ASME key to generate a composite security key K_ASME_D, thereby combining subscriber and device authentication into one key. Using the K_ASME_d key, the device **322** and a mobility management entity (MME) **510** may then generate the keys K_NAS-enc and K_NAS-int. The device **322** and MME **510** may also generate an access network-specific key K_eNB/NH. Using this access network-specific key K_eNB/NH, the device **322** and access network **504** may generate the keys K_UP-enc and K_RRC-enc and K_RRC-int.

[0075] Details about the derivation of these keys is provided in the 3GPP STD-T63-33.401 "System Architecture Evolution (SAE): Security Architecture" (known as 3GPP TS 33.401) Release 8, which is incorporated herein by reference. Note that while FIGS. **3-5** describe a particular environment/context in which device and subscriber authentication and binding may be implemented, this is not intended to be limiting of this feature which may be implemented in various other types of networks.

Exemplary Wireless Device

[0076] FIG. **6** is a block diagram illustrating select components of a wireless device **600** that may be adapted to bind subscriber authentication and device authentication. The wireless device **600** generally includes a processing circuit **602** coupled to one or more wireless communication interface (s) **604**. For instance, the wireless device **600** may be a relay node and/or an access terminal.

[0077] The processing circuit **602** may be arranged to obtain, process and/or send data, control data access and storage, issue commands, and control other desired operations. The processing circuit **602** may comprise circuitry configured to implement desired programming provided by appropriate media in at least one embodiment. For example, the processing circuit **602** may be implemented as one or

more of a processor, a controller, a plurality of processors and/or other structure configured to execute executable instructions including, for example, software and/or firmware instructions, and/or hardware circuitry. Embodiments of the processing circuit **602** may include a general purpose processor, a digital signal processor (DSP), an application specific integrated circuit (ASIC), a field programmable gate array (FPGA) or other programmable logic component, discrete gate or transistor logic, discrete hardware components, or any combination thereof designed to perform the functions described herein. A general purpose processor may be a microprocessor but, in the alternative, the processor may be any conventional processor, controller, microcontroller, or state machine. A processor may also be implemented as a combination of computing components, such as a combination of a DSP and a microprocessor, a number of microprocessors, one or more microprocessors in conjunction with a DSP core, or any other such configuration. These examples of the processing circuit **602** are for illustration and other suitable configurations within the scope of the present disclosure are also contemplated.

[0078] The wireless communications interface **604** may be configured to facilitate wireless communications of the wireless device **600**. For example, the communications interface **604** may be configured to communicate information bi-directionally with respect to other wireless devices, such as access terminals, access nodes, other relay nodes, etc. The communications interface **604** may be coupled to an antenna (not shown) and may include wireless transceiver circuitry, including at least one transmitter and/or at least one receiver (e.g., one or more transmitter/receiver chains) for wireless communications.

[0079] The processing circuit **602** may include a subscriber and device authentication binding module **610**. The subscriber and device authentication module **610** can comprise circuitry and/or programming adapted to perform subscriber authentication procedures using subscriber security credentials (e.g., a subscriber-specific key **607** and/or a subscriber identity **609** stored in a Universal Integrated Circuit Card **608**), adapted to perform (within a trusted environment **606**) device authentication procedures using a device-specific credentials (e.g., a device-specific key **605** and/or a device identity **611**), and bind the subscriber and device authentications together. Such "binding" may involve combining some results from both subscriber authentication and device authentication. For example, a first security key obtained from subscriber authentication may be combined with a second security key obtained from device authentication to obtain a third (composite) security key.

[0080] In some embodiments, the wireless device **600** may include a trusted environment (TrE) **606**. The trusted environment **606** may be adapted to meet the specifications for a trusted environment in the 3GPP Specification Detail at TS 33.320. The trusted environment **606** may be pre-provisioned (or securely embedded) with at least some security credentials (e.g., device-specific key **605** and/or device identity **611**). For example, the trusted environment **606** may have security credentials related to device authentication.

[0081] In some embodiments, the wireless device **600** may include secured processing within the universal integrated circuit card (UICC) **608**. The UICC **608** may be removably coupled to the wireless device **600**. The UICC **608** may be pre-provisioned with subscriber security credentials (e.g., subscriber-specific key **607** and/or subscriber identity **609**), such as initial authentication and key agreement (AKA) credentials. Alternatively, secured processing may be performed within a universal subscriber identity module (USIM).

[0082] According to one or more features of the wireless device **600**, the processing circuit **602** may be adapted to perform any or all of the processes, functions, steps and/or routines related illustrated in FIGS. **2-5**, **7**, **10**, **11**, and **12**. As used herein, the term "adapted" in relation to the processing circuit **602** may refer to the processing circuit **602** being configured, employed, implemented, and/or programmed to perform a particular process, function, step and/or routine according to various features described herein.

[0083] FIG. **7** is a flow diagram illustrating an example of a method operational in a wireless device to generate a security key that binds subscriber authentication and device authentication. The wireless device may be pre-provisioned with a device-specific key **702**. For instance, such device-specific key may be embedded in a chip or configured during manufacturing of the wireless device. The wireless device may also include a device identifier associated with the device-specific key. Additionally, the wireless device may be pre-provisioned with a subscriber-specific key **704**. For instance, such subscriber-specific key may be a root key assigned to a subscriber and may be stored within a fixed or removable module (e.g., UICC or USIM) coupled to the wireless device. The wireless device may also include a subscription identity associated with the subscriber-specific key. The wireless device may perform subscriber authentication with a network entity (e.g., using the subscriber-specific key) **706**. This may include, for example, an authentication and key agreement exchange with the network entity. The wireless device may also perform device authentication with the network entity (e.g., using the device-specific key) **708**. Subscriber authentication and device authentication may be performed at the same or different times and with the same network entity or with different network entities. A security key (e.g., K_ASME_D, etc.) may then be generated by the wireless device, such security key binding subscriber authentication and device authentication **710**. For instance, in one example, data (e.g., one or more resulting keys, certificates, identifiers, etc.) from device authentication and data (e.g., one or more resulting keys, certificates, identifiers, etc.) from subscriber authentication may be combined to generate the security key. For instance, in FIG. **1**, the K_ASME key from subscriber authentication **210** and the device_temp_key from device authentication in FIG. **1** may be combined to generate the security key K_ASME_D. The security key may then be used to secure wireless communications between the wireless device and the network entity **712**. For instance, the security key may be used to generate other keys and/or certificates (e.g., NAS-level and/or AS-level security keys) which may serve to encrypt/decrypt communications (e.g., data and signaling) between the wireless device and the network.

Exemplary Network Entity

[0084] FIG. **8** is a block diagram illustrating select components of a network entity **800** that may be adapted to bind subscriber authentication and device authentication. The network entity **800** may include a processing circuit **802** coupled to a communications interface **804**. The processing circuit **802** is arranged to obtain, process and/or send data, control data access and storage, issue commands, and control other desired operations. The processing circuit **802** may comprise circuitry configured to implement desired programming pro-

vided by appropriate media in at least one embodiment. For example, the processing circuit **802** may be implemented as one or more of a processor, a controller, a plurality of processors and/or other structure configured to execute executable instructions including, for example, software and/or firmware instructions, and/or hardware circuitry. Embodiments of the processing circuit **802** may include a general purpose processor, a digital signal processor (DSP), an application specific integrated circuit (ASIC), a field programmable gate array (FPGA) or other programmable logic component, discrete gate or transistor logic, discrete hardware components, or any combination thereof designed to perform the functions described herein. A general purpose processor may be a microprocessor but, in the alternative, the processor may be any conventional processor, controller, microcontroller, or state machine. A processor may also be implemented as a combination of computing components, such as a combination of a DSP and a microprocessor, a number of microprocessors, one or more microprocessors in conjunction with a DSP core, or any other such configuration. These examples of the processing circuit **802** are for illustration and other suitable configurations within the scope of the present disclosure are also contemplated.

[0085] The processing circuit **802** includes a subscriber and device authentication binding module **806**. The subscriber and device authentication binding module **806** can comprise circuitry and/or programming adapted to perform subscriber authentication procedures for authenticating a subscription based on subscriber security credentials (e.g., subscriber-specific key and/or subscriber identifier), perform device authentication procedures for authenticating the device based on a device-specific credentials (e.g., device-specific key and/or device identifier), and bind data (e.g., keys, values, certificates, etc.) from the device authentication and subscriber authentication to generate a security key.

[0086] The communications interface **804** is configured to facilitate communications of the network entity **800** to communicate, either directly or indirectly (e.g., through one or more other network entities), with other devices, such as relay nodes and access terminals.

[0087] According to one or more features of the network entity **800**, the processing circuit **802** may be adapted to perform any or all of the processes, functions, steps and/or routines related to the various network entities, such as a mobile management entity (MME) **110** and a home subscriber server (HSS) **112**. Furthermore, the network entity **800** may comprise a single entity, or a combination of two or more entities of the network. By way of example and not limitation, the network entity **800** may comprise a mobile management entity (MME), a home subscriber server (HSS), a device authentication server, among others. As used herein, the term "adapted" in relation to the processing circuit **802** may refer to the processing circuit **802** being one or more of configured, employed, implemented, or programmed to perform a particular process, function, step and/or routine according to various features described herein.

[0088] FIG. **9** is a flow diagram illustrating an example of a method operational in a network entity to generate a security key that binds subscriber authentication and device authentication. The network entity may obtain a device-specific key for a wireless device **902**. For instance, such device-specific key may be embedded in a chip or configured during manufacturing of the wireless device and this information may be stored in a database that the network entity can access. A device identifier may be associated with the device-specific key and may be used to identify the device and its key. Additionally, the network entity may obtain a subscriber-specific key associated with a subscription for the wireless device **904**. For instance, such subscriber-specific key may be a root key assigned to a subscriber and may be stored within a fixed or removable module (e.g., UICC or USIM) coupled to the wireless device. The network entity may perform subscriber authentication with the wireless device (e.g., using the subscriber-specific key) **906**. This may include, for example, an authentication and key agreement exchange with the network entity. The network entity may also perform device authentication with the wireless device (e.g., using the device-specific key) **908**. Subscriber authentication and device authentication may be performed at the same or different times. A (composite) security key (e.g., K_ASME_D, etc.) may then be generated by the network entity, such security key binding subscriber authentication and device authentication **910**. For instance, in one example, data (e.g., one or more resulting keys, certificates, identifiers, etc.) from device authentication and data (e.g., K_ASME, etc.) from subscriber authentication may be combined to generate the security key. The security key may then be used to secure wireless communications between the network entity and the wireless device **912**. For instance, the security key may be used to generate other keys and/or certificates which may serve to encrypt/decrypt communications between the wireless device and the network.

First Exemplary Method of Subscriber-Device Authentication

[0089] FIG. **10** illustrates a first exemplary method for generating a security key by binding subscriber and device authentication. In this example, the device **1002** may be a relay node or an access terminal, for example. During an attach stage, where the device **1102** may seek to attach to a wireless network (e.g., which includes MME **1002** and HSS **1006**), revealing a device identity or other related device information over the air may be a security concern (e.g., for the device **1002**). Consequently, in this method, the device **1002** does not present its device credentials (e.g., a device-specific identifier such as an International Mobile Equipment Identity (IMEI), etc.) over the air until securely requested by the network in order to prevent passive attacks on the device identity.

[0090] The device may start by sending to the network an Attach Request **1010** including an indication that it is capable of device authentication. Upon receipt of the Attach Request **1010**, a mobility management entity (MME) **1004** may request and receive subscription and authentication information **1012** (e.g., associated with a subscription-based account or user of the device **1002**) from a home subscription server (HSS) **1006**. The MME **1004** then sends an Authentication Request **1014** which includes an AKA Challenge in order to perform AKA authentication. Upon receipt of the AKA Authentication Request **1014**, the device **1002** sends and Authentication Response **1016** including an AKA response. The AKA Authentication Request **1014** and Response **1016** serve to perform subscription authentication. Such AKA authentication procedures may result in an subscriber authentication key (e.g., K_ASME) being generated by the device **1002** and the MME.

[0091] Device authentication may be performed at various stages during this security activation process. In this example, device authentication may be piggy-backed on the NAS-level

security messages. For example, the MME **1004** may send a NAS Security Mode Command **1018** which includes a request for device identity (e.g., a request for IMEI Software Version (IMEISV) and/or request for device_credentials). In response, the device **1002** may provide a device identity or credential, within a Security Mode Complete **1020** message, that device authentication is to be performed. Note that, to avoid exposing the device identity or credential over the air during transmission, the device identity or credential in Security Mode Complete **1020** may be secured by the previously computed subscriber authentication key (e.g., K_ASME). Upon receipt of the device identity or credential, the MME **1004** may send an Identity Request **1022** message, with an evolved/extended key set identifier (eKSI) and a device_challenge. The eKSI may be associated with a K_ASME_D to be generated. Thus, the eKSI used in the Identity Request **1022** may be different or distinct from any other eKSI that may have been used, for example, for AKA (i.e., subscriber authentication). Upon receipt of the Identity Request **1022** message, the device **1002** may generate a device_response based on the device_challenge and sends this as part of an Identity_Response **1024** message. The device_response may be based on the device_challenge and the device identity or credential. The device **1002** may then calculate a (composite) security key (K_ASME_D) **1025** based on the authentication key (e.g., K_ASME) and device authentication data (e.g., device response, etc.). The MME **1004** checks the device_response, for example, by using the device identity or certificate of the device **1002** and using on the device_challenge. If the device **1002** is successfully authenticated by the MME **1004**, the MME **1004** also generates the security key (K_ASME_D) **1027**. At this point, the device **1002** and MME **1004** share the security key (K_ASME_D) and its associated identifier eKSI.

[0092] The MME **1004** may then send a Security Mode Command **1026** with the evolved/extended key set identifier eKSI associated with the security key (K_ASME_D). This allows the device **1002** to compute one or more security keys based on the security key (K_ASME_D). The device **1002** may send a Security Mode Complete **1028** message to the MME **1004**, thereby allowing the MME **1004** to send an Attach Complete **1030** message.

Second Exemplary Method of Subscriber-Device Authentication

[0093] FIG. **11** illustrates a second exemplary method for generating a security key by binding subscriber and device authentication. In this example, revealing the device identity or certificate (or other related credential information) in an over the air transmission is not a security concern. Unlike the method of FIG. **10**, in this case, it is assumed that presenting the device identity upfront will not lead to any privacy issues or risks.

[0094] The device already has a device identifier or credentials (e.g., IMEI) that the MME will accept but does not have an E-UTRAN security context that the MME is willing to use.

[0095] The device **1102** sends an Attach Request **1108** including its device identifier or credentials to the MME **1104**. The MME **1104** may obtain a subscription and authentication information **1110** from HSS **1106** and sends an Authentication Request **1112** including, for example, an AKA challenge (for subscription authentication) and/or a device challenge (for device authentication). Note that, the device **1102** may respond by sending an Authentication Response **1114** that may include an AKA response and/or a device response. The AKA response may be based, at least partially, on the subscriber identifier. The device response may be based on the device identifier and/or credentials and the device challenge The device **1104** may then generate a (composite) security key K_ASME_D by combining subscriber authentication information and device authentication information. Similarly, upon successful verification of the AKA response and device response, the MME **1104** may also generate the security key K_ASME_D by combining subscriber authentication information and device authentication information.

[0096] The MME sends a Security Mode Command **1116** message to start using the security context based on the security key K_ASME_D. The device **1102** responds with a Security Mode Complete **1118** message. That is, the device **1102** and MME **1104** may generate one or more additional security keys (or otherwise secure communications between the device **1102** and MME **1104**) using the security key K_ASME_D. The MME **1104** may then send an Attach Complete **1120** message to the device **1102**.

[0097] An observation here is that if the device identifier and/or credentials (or a previously obtained/generated device keys) were stored in the HSS **1106** or another server in the network with a subscription identifier, then the device **1102** could use this flow to perform attachment. In order to do this there, the device **1102** may indicate (e.g., in the Attach Request **1108**) that its device identifier and/or credentials may be obtained from the HSS **1106** or other network server. Alternatively, the MME **1104** may indicate to the device **1102** that the device_challenge is associated with a particular device identifier (e.g., by including the device identifier, such as IMEI, along with the device_challenge in some form). This way, the device **1102** can know that the device challenge (in the Authentication Request **1112**) is associated with its device identifier.

Third Exemplary Method of Subscriber-Device Authentication

[0098] FIG. **12** illustrates a third exemplary method for generating a security key by binding subscriber and device authentication. In this example, subscriber authentication has been previously performed so a subscriber security context **1206** (e.g., K_ASME key) is already present. The combined subscriber and device authentication may be initiated by the network to replace the existing security context. This embodiment may be beneficial to devices that might need to establish an initial AKA-based security context in order to obtain a full fledged or operational credentials from the operator.

[0099] This approach assumes that the MME already knows device identifier (e.g., IMEI) and/or device_credentials.

[0100] The MME **1204** sends an Authentication Request **1208** to the device **1202** that includes a device_challenge. In response, the device **1202** sends an Authentication Response **1210** to the MME **1204** that includes a device response. The device_response may be based on the device_challenge and the device identifier and/or certificate. At this point, both the device **1202** and MME **1204** may have sufficient information to calculate a (composite) security key K_ASME_D (e.g., based on the AKA-based security context and device authentication information).

[0101] The MME **1204** may send a NAS Security Mode Command **1212** to the device **1202** to replace the existing

security context **1206** to one based on the new security key K_ASME_D (e.g., which incorporates both subscriber authentication and device authentication). In response, the device **1202** may generate a new security context based on the security key K_ASME_D and may send a NAS Security Mode Complete **1214** message in response.

[0102] Note that while various examples herein illustrate that both subscriber authentication and device authentication may be performed via the MME, other network entities may perform some of these functions in combination with, or in place of, the MME.

[0103] One or more of the components, steps, features and/or functions illustrated in FIGS. **1**, **2**, **3**, **4**, **5**, **6**, **7**, **8**, **9**, **10**, **11**, and/or **12** may be rearranged and/or combined into a single component, step, feature or function or embodied in several components, steps, or functions. Additional elements, components, steps, and/or functions may also be added without departing from the present disclosure. The apparatus, devices, and/or components illustrated in FIGS. **1**, **5**, **6** and/or **8** may be configured to perform one or more of the methods, features, or steps described in FIGS. **2**, **3**, **4**, **7** and/or **9-12**. The novel algorithms described herein may also be efficiently implemented in software and/or embedded in hardware.

[0104] Also, it is noted that at least some implementations have been described as a process that is depicted as a flowchart, a flow diagram, a structure diagram, or a block diagram. Although a flowchart may describe the operations as a sequential process, many of the operations can be performed in parallel or concurrently. In addition, the order of the operations may be re-arranged. A process is terminated when its operations are completed. A process may correspond to a method, a function, a procedure, a subroutine, a subprogram, etc. When a process corresponds to a function, its termination corresponds to a return of the function to the calling function or the main function.

[0105] Moreover, embodiments may be implemented by hardware, software, firmware, middleware, microcode, or any combination thereof. When implemented in software, firmware, middleware or microcode, the program code or code segments to perform the necessary tasks may be stored in a machine-readable medium such as a storage medium or other storage(s). A processor may perform the necessary tasks. A code segment may represent a procedure, a function, a subprogram, a program, a routine, a subroutine, a module, a software package, a class, or any combination of instructions, data structures, or program statements. A code segment may be coupled to another code segment or a hardware circuit by passing and/or receiving information, data, arguments, parameters, or memory contents. Information, arguments, parameters, data, etc. may be passed, forwarded, or transmitted via any suitable means including memory sharing, message passing, token passing, network transmission, etc.

[0106] The terms "machine-readable medium", "computer-readable medium", and/or "processor-readable medium" may include, but are not limited to portable or fixed storage devices, optical storage devices, and various other non-transitory mediums capable of storing, containing or carrying instruction(s) and/or data. Thus, the various methods described herein may be partially or fully implemented by instructions and/or data that may be stored in a "machine-readable medium", "computer-readable medium", and/or "processor-readable medium" and executed by one or more processors, machines and/or devices.

[0107] The methods or algorithms described in connection with the examples disclosed herein may be embodied directly in hardware, in a software module executable by a processor, or in a combination of both, in the form of processing unit, programming instructions, or other directions, and may be contained in a single device or distributed across multiple devices. A software module may reside in RAM memory, flash memory, ROM memory, EPROM memory, EEPROM memory, registers, hard disk, a removable disk, a CD-ROM, or any other form of non-transitory storage medium known in the art. A storage medium may be coupled to the processor such that the processor can read information from, and write information to, the storage medium. In the alternative, the storage medium may be integral to the processor.

[0108] Those of skill in the art would further appreciate that the various illustrative logical blocks, modules, circuits, and algorithm steps described in connection with the embodiments disclosed herein may be implemented as electronic hardware, computer software, or combinations of both. To clearly illustrate this interchangeability of hardware and software, various illustrative components, blocks, modules, circuits, and steps have been described above generally in terms of their functionality. Whether such functionality is implemented as hardware or software depends upon the particular application and design constraints imposed on the overall system.

[0109] The various features of the invention described herein can be implemented in different systems without departing from the invention. It should be noted that the foregoing embodiments are merely examples and are not to be construed as limiting the invention. The description of the embodiments is intended to be illustrative, and not to limit the scope of the disclosure. As such, the present teachings can be readily applied to other types of apparatuses and many alternatives, modifications, and variations will be apparent to those skilled in the art.

What is claimed is:

1. A method operational in a device, comprising:

performing subscriber authentication with a network entity;

performing device authentication of the device with the network entity;

generating a security key that binds the subscriber authentication and the device authentication; and

using the security key to secure communications between the device and a serving network.

2. The method of claim **1**, wherein subscriber authentication is based on an authentication key agreement exchange between the device and the network entity.

3. The method of claim **1**, wherein device authentication is based on a challenge-response exchange between the device and the network entity.

4. The method of claim **1**, wherein subscriber authentication is performed by a first authentication server that is part of the network entity, and device authentication is performed by a second authentication server that is part of the network entity.

5. The method of claim **1**, wherein device authentication is performed by:

receiving data from the network entity that is encrypted with a public key of the device;

using a corresponding private key to decrypt the encrypted data; and

subsequently proving to the network entity that the device has knowledge of the data.

6. The method of claim **1**, further comprising:

sending an attach request from the device to the network entity, the attach request including an indication of device authentication capabilities of the device.

7. The method of claim **1**, wherein device authentication is secured by at least one key generated during the subscriber authentication.

8. The method of claim **1**, wherein subscriber authentication and device authentication are concurrently performed in combined message exchanges.

9. The method of claim **1**, wherein subscriber authentication is performed in an earlier and separate security exchange from the device authentication.

10. The method of claim **1**, wherein the security key is generated as a function of at least a first key obtained from subscriber authentication and a second key obtained from device authentication.

11. The method of claim **10**, wherein the security key is also a function of a network nonce and a device nonce.

12. The method of claim **1**, wherein the device is a relay node that appears as an access terminal to the network entity and appears as a network device to one or more access terminals.

13. The method of claim **1**, wherein the security key is separately generated by the device and the network entity.

14. The method of claim **1**, further comprising:

provisioning a subscriber-specific key as part of a service agreement, where the subscriber-specific key is used for the subscriber authentication; and

provisioning a device-specific key in the device during manufacturing, where the device-specific key is used for the device authentication.

15. A device, comprising:

a communication interface; and

a processing circuit coupled to the communication interface, the processing circuit adapted to:

perform subscriber authentication with a network entity;

perform device authentication of the device with the network entity;

generate a security key that binds the subscriber authentication and the device authentication; and

use the security key to secure communications between the device and a serving network.

16. The device of claim **15**, wherein subscriber authentication is based on an authentication key agreement exchange between the device and the network entity.

17. The device of claim **15**, wherein device authentication is based on a challenge-response exchange between the device and the network entity.

18. The device of claim **15**, wherein device authentication is performed by:

receiving data from the network entity that is encrypted with a public key of the device;

using a corresponding private key to decrypt the encrypted data; and

subsequently proving to the network entity that the device has knowledge of the data.

19. The device of claim **15**, further comprising:

sending an attach request from the device to the network entity, the attach request including an indication of device authentication capabilities of the device.

20. The device of claim **15**, wherein device authentication is secured by at least one key generated during the subscriber authentication.

21. The device of claim **15**, wherein subscriber authentication and device authentication are concurrently performed in combined message exchanges.

22. The device of claim **15**, wherein subscriber authentication is performed in an earlier and separate security exchange from the device authentication.

23. The device of claim **15**, wherein the security key is generated as a function of at least a first key obtained from subscriber authentication and a second key obtained from device authentication.

24. The device of claim **15**, wherein the device is a relay node that appears as an access terminal to the network entity and appears as a network device to one or more access terminals.

25. The device of claim **15**, further comprising:

a removable storage device coupled to the processing circuit and storing a subscriber-specific key used for the subscriber authentication; and

a secure storage device coupled to the processing circuit and storing a device-specific key used for the device authentication.

26. A device, comprising:

means for performing subscriber authentication with a network entity;

means for performing device authentication of the device with the network entity;

means for generating a security key that binds the subscriber authentication and the device authentication; and

means for using the security key to secure communications between the device and a serving network.

27. The device of claim **26**, further comprising:

means for storing a subscriber-specific key used for the subscriber authentication; and

means for storing a device-specific key used for the device authentication.

28. A processor-readable medium comprising instructions operational on a device, which when executed by a processor causes the processor to:

perform subscriber authentication with a network entity;

perform device authentication of the device with the network entity;

generate a security key that binds the subscriber authentication and the device authentication; and

use the security key to secure communications between the device and a serving network.

29. A method operational in a network entity, comprising:

performing subscriber authentication with a device;

performing device authentication of the device;

generating a security key that binds the subscriber authentication and the device authentication; and

using the security key to secure communications between the network entity and the device.

30. The method of claim **29**, wherein subscriber authentication is based on an authentication key agreement exchange between the network entity and the device.

31. The method of claim **29**, wherein device authentication is based on a challenge-response exchange between the network entity and the device.

32. The method of claim **29**, wherein device authentication includes:

receiving a certificate from the device;

verifying the certificate associated with the device has not been revoked.

33. The method of claim **29**, further comprising:

receiving an attach request from the device, the attach request including an indication of device authentication capabilities of the device.

34. The method of claim **29**, wherein device authentication is secured by at least one key generated during the subscriber authentication.

35. The method of claim **29**, wherein subscriber authentication and device authentication are concurrently performed in combined message exchanges.

36. The method of claim **29**, wherein subscriber authentication is performed in an earlier and separate security exchange from the device authentication.

37. The method of claim **29**, wherein the security key is generated as a function of at least a first key obtained from subscriber authentication and a second key obtained from device authentication.

38. The method of claim **29**, wherein the security key is separately generated by the device and the network entity.

39. The method of claim **29**, further comprising:

obtaining a subscriber-specific key as part of a service agreement, the subscriber-specific key used for the subscriber authentication; and

obtaining a device-specific key for the device, the device-specific key used for the device authentication.

40. A network entity, comprising:

a communication interface; and

a processing circuit coupled to the communication interface, the processing circuit adapted to:

perform subscriber authentication with a device;

perform device authentication of the device;

generate a security key that binds the subscriber authentication and the device authentication; and

use the security key to secure communications between the network entity and the device.

41. The network entity of claim **40**, wherein subscriber authentication is based on an authentication key agreement exchange between the network entity and the device.

42. The network entity of claim **40**, wherein device authentication is based on a challenge-response exchange between the network entity and the device.

43. The network entity of claim **40**, wherein the processing circuit is further adapted to:

receive an attach request from the device, the attach request including an indication of device authentication capabilities of the device.

44. The network entity of claim **40**, wherein device authentication is secured by at least one key generated during the subscriber authentication.

45. The network entity of claim **40**, wherein subscriber authentication and device authentication are concurrently performed in combined message exchanges.

46. The network entity of claim **40**, wherein subscriber authentication is performed in an earlier and separate security exchange from the device authentication.

47. The network entity of claim **40**, wherein the security key is generated as a function of at least a first key obtained from subscriber authentication and a second key obtained from device authentication.

48. The network entity of claim **40**, further comprising:

obtaining a subscriber-specific key as part of a service agreement, the subscriber-specific key used for the subscriber authentication; and

obtaining a device-specific key for the device, the device-specific key used for the device authentication.

49. A network entity, comprising

means for performing subscriber authentication with a device;

means for performing device authentication of the device;

means for generating a security key that binds the subscriber authentication and the device authentication; and

means for using the security key to secure communications between the network entity and the device.

50. A processor-readable medium comprising instructions operational on a network entity, which when executed by a processor causes the processor to:

perform subscriber authentication with a device;

perform device authentication of the device;

generate a security key that binds the subscriber authentication and the device authentication; and

use the security key to secure communications between the network entity and the device.

* * * * *