Service Manual

INFRARED HEATSINK™ HOLDING UNIT

Includes Standalone, Kitchen Minder and VISOR models

MODELS
IRHS22
IRHS23
IRHS24
IRHS34
IRHS42

Please read this manual completely before attempting to install, operate or service this equipment.

This document is prepared for trained Duke service technicians. It is not to be used by anyone not properly qualified to perform these procedures.

This Service Manual is not all encompassing. If you have not been trained on servicing this product, be sure to read the manual completely before attempting servicing. Be sure all necessary tools, test equipment, and skills are available. Those procedures for which you do not have the proper skills and test equipment must be performed only by a qualified Duke trained service technician.

This manual is Copyright © 2014 Duke Manufacturing Co. All rights reserved.
Reproduction without written permission is prohibited. Duke is a registered trademark of the Duke Manufacturing Co.

Duke Manufacturing Co.

2305 North Broadway • St. Louis, MO 63102-1405
Phone: 314-231-1130 • Toll Free: 1-800-735-3853 • Fax: 314-231-5074
service-dispatch@dukemfg.com • www.dukemfg.com

Duke Manufacturing Co. EX1008
U.S. Patent No. 10,841,981

IMPORTANT WARNING AND SAFETY INFORMATION

READ THIS MANUAL THOROUGHLY BEFORE OPERATING, INSTALLING OR PERFORMING MAINTENANCE ON THE EQUIPMENT.

⚠ WARNING **READ THIS MANUAL THOROUGHLY BEFORE OPERATING, INSTALLING OR PERFORMING MAINTENANCE ON THE EQUIPMENT**

⚠ WARNING **FAILURE TO FOLLOW INSTRUCTIONS IN THIS MANUAL CAN CAUSE PROPERTY DAMAGE, INJURY OR DEATH.**

⚠ WARNING **DO NOT USE OR STORE GASOLINE OR OTHER FLAMMABLE VAPORS OR LIQUIDS IN THE VICINITY OF THIS OR ANY OTHER APPLIANCE.**

⚠ WARNING **DO NOT OPERATE THIS EQUIPMENT WITHOUT PROPERLY PLACING AND SECURING ALL COVER AND ACCESS PANELS.**

⚠ WARNING **IMPROPER INSTALLATION, ADJUSTMENT, ALTERATION, SERVICE OR MAINTENANCE CAN CAUSE PROPERTY DAMAGE, INJURY OR DEATH. READ THE INSTALLATION, OPERATING AND MAINTENANCE INSTRUCTIONS THOROUGHLY BEFORE INSTALLING THIS EQUIPMENT.**

FOR YOUR SAFETY

Electricity and water do not mix. Unplug the unit before cleaning. If repairs are required, use a qualified service agent. While repairs are being made, be sure the unit is not plugged in. Do not store highly combustible substances on or near the unit. Be sure the compressor compartment has adequate ventilation.

CAUTION

Observe the following:

- Provide and maintain adequate minimum clearances from all walls and combustible materials.
- Provide and maintain adequate clearance for air openings.
- Keep the equipment area free and clear of combustible material.
- Operate equipment only on the type of electricity indicated on the specification plate.
- Retain this manual for future reference.

TABLE OF CONTENTS

SPECIFICATIONS 5
IRHS22 5
IRHS23 6
IRHS24 7
IRHS34 8
IRHS42 9

REMOVAL AND REPLACEMENT OF PARTS 10
EQUIPMENT USED IN THESE INSTRUCTIONS 10
ELECTRICAL LOCKOUT/TAGOUT PROCEDURE 10
ESD WRIST STRAP 11
DECK ASSEMBLY COMPONENTS 12
MENU BA RS 12
KEYPAD DISPLAYS 14
RTD (TEMPERATURE) SENSORS 16
HIGH LIMIT THERMOSTATS 18
HEAT ELEMENTS 21
EMITTER (IR BULB) SOCKETS 24
EMITTERS (IR BULBS) 27
CONTROL COMPARTMENT COMPONENTS – STANDALONE & KITCHEN MINDER MODELS (only) ... 28
POWER SWITCH 28
USB ADAPTER 28
DAYPART SWITCH 29
RELAYS (Smart Power Modules) 29
CONTROLLER 30
TRANSFORMER 30
RTD BOARD 31
FUSES AND FUSE HOLDER 32
CONTROL COMPARTMENT COMPONENTS – KITCHEN MINDER MODEL (only) 33
KITCHEN MINDER MASTER BOARD (if installed) 33
KITCHEN MINDER ADAPTER BOARD (if installed) 34
MOUNTING PLATE (if installed) 35
COUPLERS (if installed) 36
CONTROL COMPARTMENT COMPONENTS – VISOR MODEL (only) 37
12V POWER CONTROL BOARD 37
POWER CONTROL BOARD – ACM 38
POWER CONTROL BOARD – 103M 39
POWER CONTROL BOARD – TRIAC DRIVE 40
FUSE HOLDER AND FUSES 41

TROUBLESHOOTING & DIAGNOSTICS....42
IRHS TROUBLESHOOTING FLOW CHART....42
IRHS TROUBLESHOOTING GUIDE....43
IRHS COMPONENT TECHNICAL SPECIFICATIONS....44

OPERATIONS....47
OPERATING PROCEDURES....47
OPERATIONS....47
Changing Dayparts....48
Display Link, Hold Time, or Temperature....49
DIAGNOSTICS....50
Checking Heat Sink Temperature....50
Checking IR Bulb Function....50
Checking Product Settings (via USB file)....50
Error Codes....51
Temperature Check Procedure....51

CLEANING & ROUTINE MAINTENANCE....52
CLEANING....52
RECOMMENDED SUPPLIES....52
DAILY INSPECTION CHECKLIST....52
DAILY CLEANING PROCEDURES....53

WEBSITE PROGRAMMING....54

WIRING SCHEMATICS....58
IRHS DECK WIRING....58
IRHS22 Wiring DIAGRAM....59
IRHS23 WIRING DIAGRAM....60
IRHS24 WIRING DIAGRAM....61
IRHS34 WIRING DIAGRAM....62
IRHS42 WIRING DIAGRAM....63
VISOR INTERFACE CABLE WIRING DIAGRAM....64
KITCHEN MINDER CONNECTIONS....65

CUSTOMER ASSISTANCE....67

SPECIFICATIONS

IRHS22

			Before Serial# 10140480 (10/1/14)			*As of Serial# 10140480*		
		Shipping Weight	125 lbs / 56.7 kg			110 lbs / 49.9 kg		
Model	**Electrical**	**Plug**	**H**	**W**	**D**	**H**	**W**	**D**
IRHS22-208	208V ~ 12 A, 50/60 Hz	NEMA 6-15P	14.4 in / 36.6 cm	19.3 in / 49.0 cm	20.1 in / 51.1 cm	13.3 in / 33.8 cm	19.3 in / 49.0 cm	20.1 in / 51.1 cm
IRHS22-230	230V ~ 12 A, 50/60 Hz	SHUKO, 16 AMP (*as of 11/3/14*) IEC, 16 AMP						
IRHS22-240	240V ~ 12 A, 50/60 Hz	NEMA 6-15P						

IRHS23

			Up to Serial# 101413198 (10/20/14)			*After SN# 101413198*		
		Shipping Weight	160 lbs / 72.6 kg			143 lbs / 64.9 kg		
Model	**Electrical**	**Plug**	**H**	**W**	**D**	**H**	**W**	**D**
IRHS23-208	208V ~ 12 A, 50/60 Hz	NEMA 6-15P	14.4 in / 36.6 cm	26.4 in / 67.1 cm	20.1 in / 51.1 cm	13.3 in / 33.8 cm	26.4 in / 67.1 cm	20.1 in / 51.1 cm
IRHS23-230	230V ~ 12 A, 50/60 Hz	SHUKO, 16 AMP (*as of 11/3/14*) IEC, 16 AMP						
IRHS23-240	240V ~ 12 A, 50/60 Hz	NEMA 6-15P						

IRHS24

			Before Serial# 10140545 (10/3/14)			*As of Serial# 10140545*		
		Shipping Weight	195 lbs / 88.4 kg			181 lbs / 82.1 kg		
Model	**Electrical**	**Plug**	**H**	**W**	**D**	**H**	**W**	**D**
IRHS24-208	208V ~ 12 A, 50/60 Hz	NEMA 6-15P	14.4 in / 36.6 cm	33.4 in / 84.8 cm	20.1 in / 51.1 cm	13.3 in / 33.8 cm	33.4 in / 84.8 cm	20.1 in / 51.1 cm
IRHS24-230	230V ~ 12 A, 50/60 Hz	SHUKO, 16 AMP (*as of 11/3/14*) IEC, 16 AMP						
IRHS24-240	240V ~ 12 A, 50/60 Hz	NEMA 6-15P						

IRHS34

			Before Serial# 10140032 (10/1/14)			*As of Serial# 10140032*		
		Shipping Weight	275 lbs / 124.7 kg			243 lbs / 110.2 kg		
Model	**Electrical**	**Plug**	**H**	**W**	**D**	**H**	**W**	**D**
IRHS34-208	208V ~ 16 A, 50/60 Hz	NEMA 6-20P	20.9 in / 53.1 cm	33.4 in / 84.8 cm	20.1 in / 51.1 cm	19.3 in / 49.0 cm	33.4 in / 84.8 cm	20.1 in / 51.1 cm
IRHS34-230	230V ~ 16 A, 50/60 Hz	SHUKO, 16 AMP (*as of 11/3/14*) IEC, 16 AMP						
IRHS34-240	240V ~ 16 A, 50/60 Hz	NEMA 6-20P						

IRHS42

		Shipping Weight	187 lbs / 84.8 kg		
Model	**Electrical**	**Plug**	**H**	**W**	**D**
IRHS42-208	208V ~ 12 A, 50/60 Hz	NEMA 6-15P	25.3 in / 64.3 cm	19.3 in / 49.0 cm	20.1 in / 51.1 cm
IRHS42-230	230V ~ 12 A, 50/60 Hz	SHUKO, 16 AMP (*as of 11/3/14*) IEC, 16 AMP			
IRHS42-240	240V ~ 12 A, 50/60 Hz	NEMA 6-15P			

REMOVAL AND REPLACEMENT OF PARTS

EQUIPMENT USED IN THESE INSTRUCTIONS

- Phillips screwdriver
- #1 precision screwdriver
- Flat-head screwdriver
- Needle-nose pliers
- 11/16" open-end wrench
- 11/32" nut driver or socket
- 1/4" nut driver or socket
- Tie wraps
- ESD Wrist Strap
- Aluminum tape
- Ohmmeter
- Heat transfer compound
- Clean gloves/cloths/towels

ELECTRICAL LOCKOUT/TAGOUT PROCEDURE

WARNING

BEFORE PERFORMING ANY SERVICE THAT INVOLVES ELECTRICAL CONNECTION OR DISCONNECTION AND/OR EXPOSURE TO ELECTRICAL COMPONENTS, ALWAYS FOLLOW THE ELECTRICAL LOCKOUT/TAGOUT PROCEDURE. DISCONNECT ALL CIRCUITS. FAILURE TO COMPLY CAN CAUSE PROPERTY DAMAGE, INJURY OR DEATH.

The Electrical LOCKOUT/TAGOUT Procedure is used to protect personnel working on an electrical appliance. Before performing any maintenance or service that requires exposure to electrical components, follow these steps:

1. In electrical box, place appliance circuit breaker into OFF position.
2. Place a lock or other device on electrical box cover to prevent someone from placing circuit breaker ON.
3. Place a tag on electrical box cover to indicate that appliance has been disconnected for service and power should not be restored until tag is removed by maintenance personnel.
4. Disconnect appliance power cord from electrical outlet.
5. Place a tag on the cord to indicate that unit has been disconnected for service and power should not be restored until tag is removed.

ESD WRIST STRAP

Electrostatic Discharge (ESD) is one of the biggest dangers to components in electronic devices. An ESD wrist strap allows any accumulated static charge to disperse safely through its cable, rather than through static-sensitive components such as unit computer-related components.

1. Place the ESD wrist strap around your wrist. The wrist strap should be next to your skin, so it needs to be placed under any clothes.
2. Tighten the wrist strap so that the attached metal plate maintains good contact with your skin. Do not over tighten as the wrist strap should not be uncomfortable.

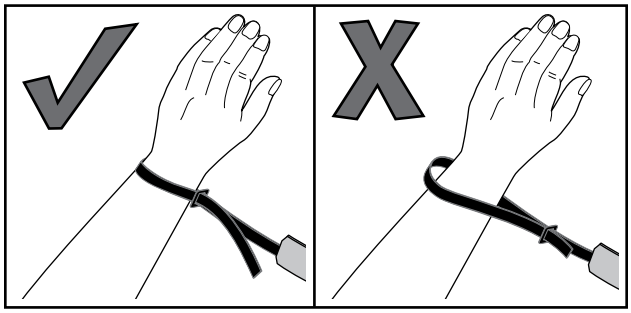

3. Connect the cable to the wrist strap if it is disconnected. The cable should be securely clipped in place to maintain a good connection.
4. Place the unit's Power Switch in the OFF position and follow the proper Lockout/Tagout procedures.
5. Connect the alligator clip on the other end of the cable to a metal surface on the unit. This creates a path through which any built-up static charge can safely flow without causing any damage. A built-in high value resistor ensures the charge leaks away in a controlled manner, and protects the user.

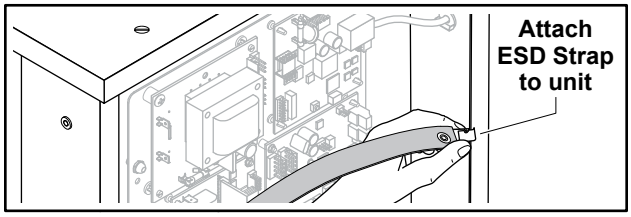

DECK ASSEMBLY COMPONENTS

MENU BA RS

The Menu Bars hold the Keypad Displays that control and monitor the performance of each heating well. The quantity varies (depending on model) and are located on the front and back faces of the unit.

TOOLS REQUIRED: Phillips screwdriver; Flat-head screwdriver

1. Place the unit's Power Switch in the OFF position and follow the proper Lockout/Tagout procedures.
2. Remove and retain the screws securing the Control Side Cover and remove the cover.

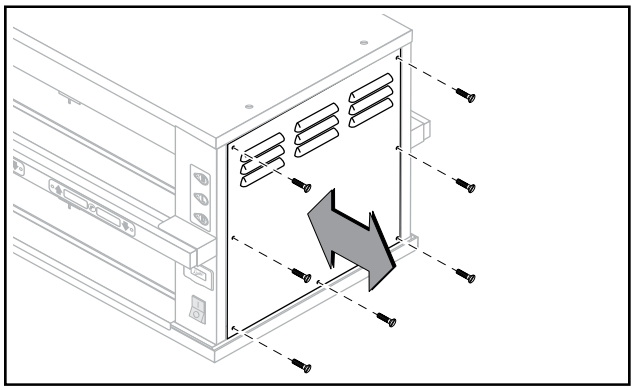

3. Remove and retain screws of the affected Menu Bar and pull away from the face of the unit. It is not necessary, but recommended, to completely remove the Menu Bar from the unit.

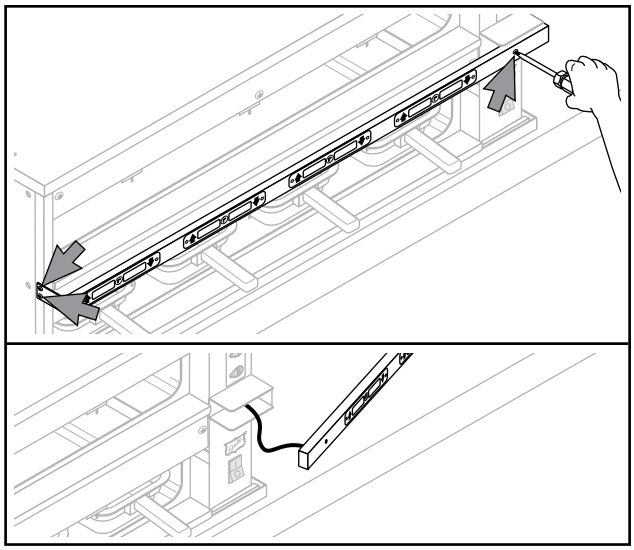

4. Mark and disconnect the affected Menu Bar's molex connector inside the control compartment.
5. If it is necessary to reuse the existing Keypad Displays in a replacement Menu Bar:
   a. Remove and retain the two (2) screws securing the Menu Bar Back Channel and pry out of the former Menu Bar.

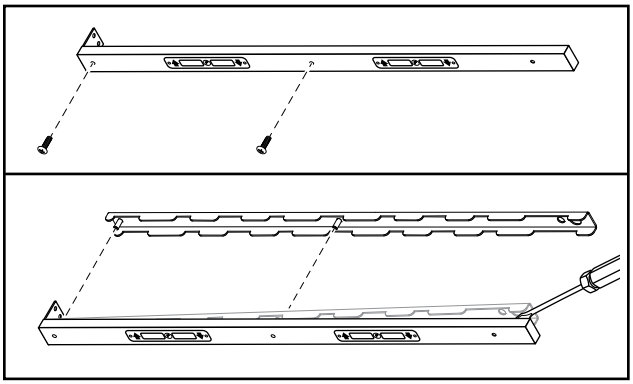

   b. A Keypad Spacer is attached to the rear of each Keypad Display with double-sided tape. Carefully pry off and remove the Keypad Spacer from the affected Keypad Display(s). This will free-up the Menu Bar Harness.

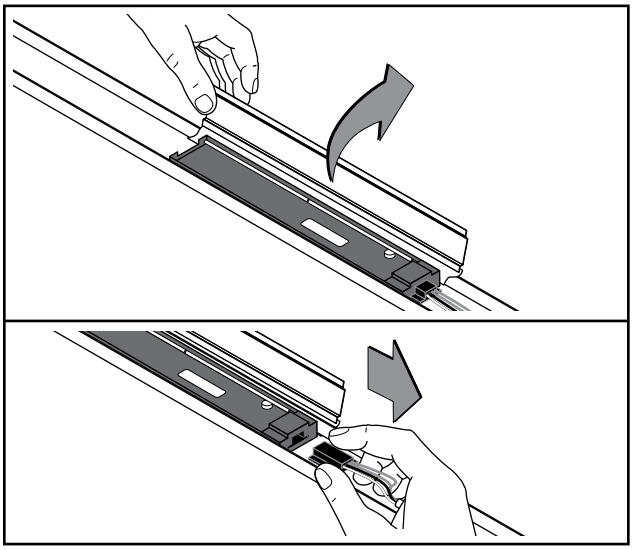

c. Disconnect the affected Keypad Display(s) electrical connector from the Menu Bar Harness.

d. The Keypad Displays are attached to the Menu Bar with double-sided glue dots. Carefully pry off and remove the affected Keypad Display from the Menu Bar.

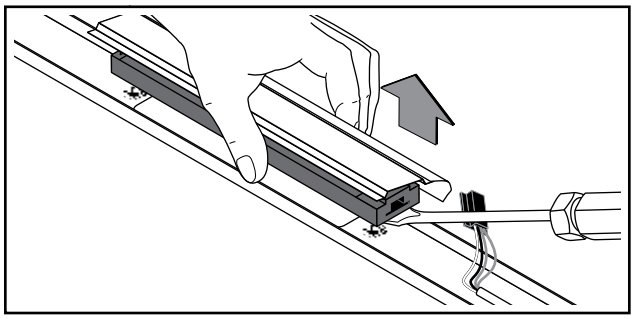

e. Carefully scrape any remaining adhesive residue from the inside of the Menu Bar.

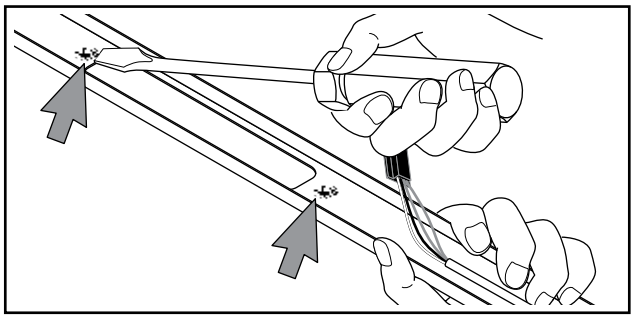

RESTORE

6. Carefully place the Keypad Displays in place on the interior side of the replacement Menu Bar. If reusing the Keypad Displays, it may be necessary to use additional double-sided tape to secure the Keypad Displays to the Menu Bar.

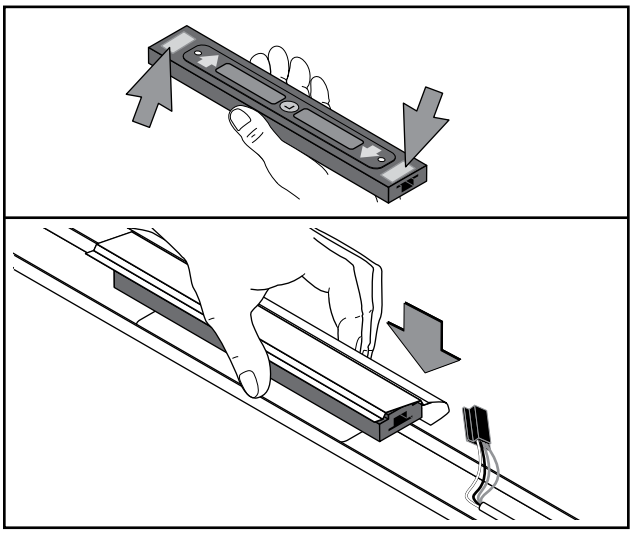

7. Connect the replacement Menu Bar Harness' molex connector in the control compartment.
8. Replace the Keypad Spacer, over the Menu Bar Harness, to the rear of the Keypad Display(s).
9. Reinstall Menu Bar Back Channel using its screws.
10. Reinstall the Menu Bar using its screws.
11. Replace the Control Side Cover and secure with its screws.
12. Restore power to the unit and test for proper function.

KEYPAD DISPLAYS

The Keypad Displays control and monitor the performance of each heating well. They are located inside of the Menu Bar(s) and the quantity varies (depending on model).

TOOLS REQUIRED: Phillips screwdriver; Flat-head screwdriver

1. Place the unit's Power Switch in the OFF position and follow the proper Lockout/Tagout procedures.
2. Remove and retain the screws securing the Control Side Cover and remove the cover.

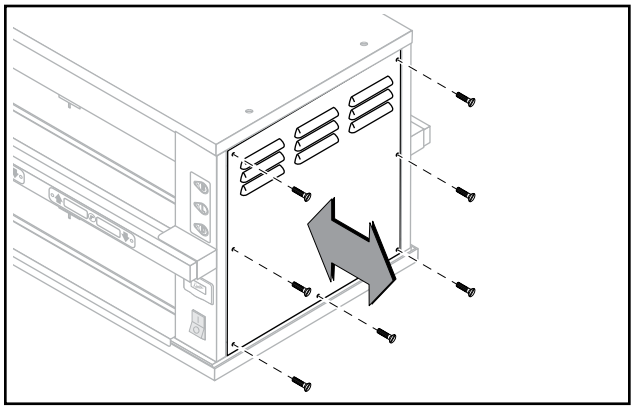

3. Disconnect the affected Menu Bar's molex connector inside the control compartment.
4. Remove and retain screws of the Menu Bar containing the affected Keypad Display and pull away from the face of the unit. It is not necessary, but recommended, to completely remove the Menu Bar from the unit.

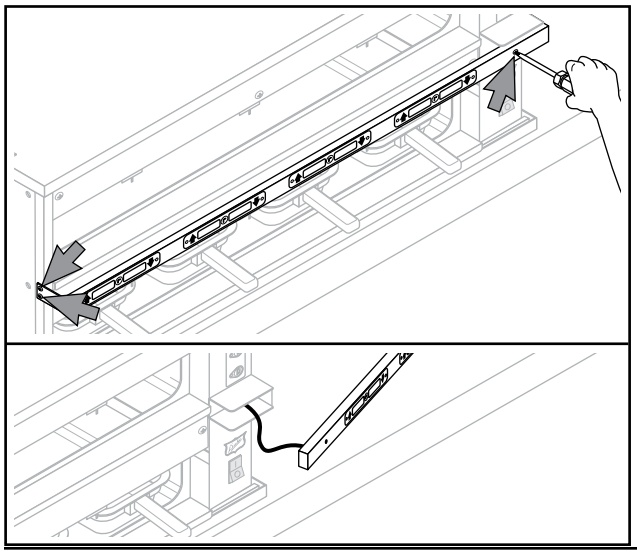

5. Remove and retain the screws securing the Menu Bar Back Channel from the front of the Menu Bar and pry out of the Menu Bar.

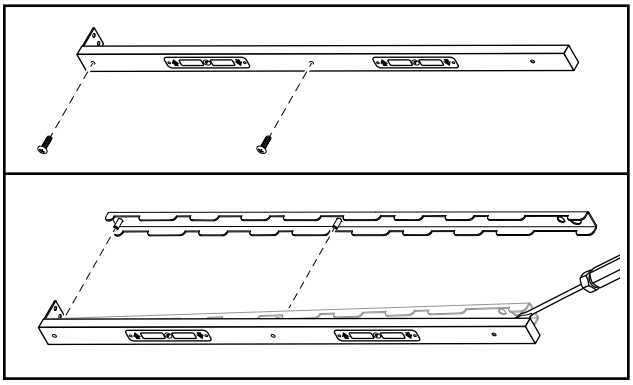

6. A Keypad Spacer is attached to the rear of each Keypad Display with double-sided tape. Carefully pry off and remove the Keypad Spacer from the affected Keypad Display(s). This will free-up the Menu Bar Harness.

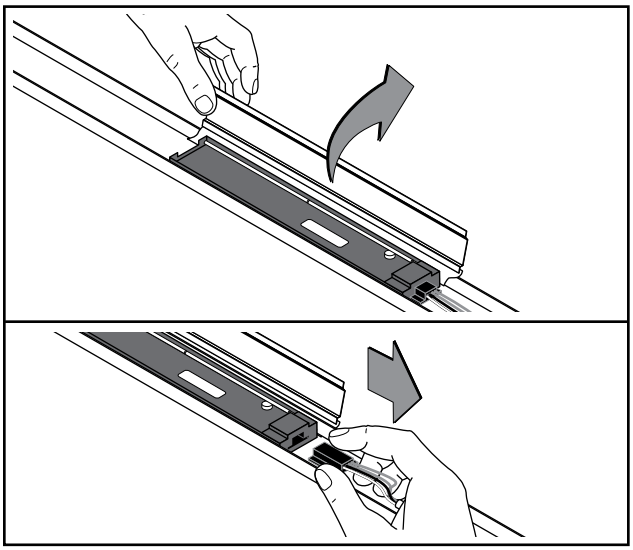

7. Disconnect the affected Keypad Display(s) electrical connector from the Menu Bar Harness.

8. The Keypad Displays are attached to the Menu Bar with double-sided glue dots. Carefully pry off and remove the affected Keypad Display from the Menu Bar.

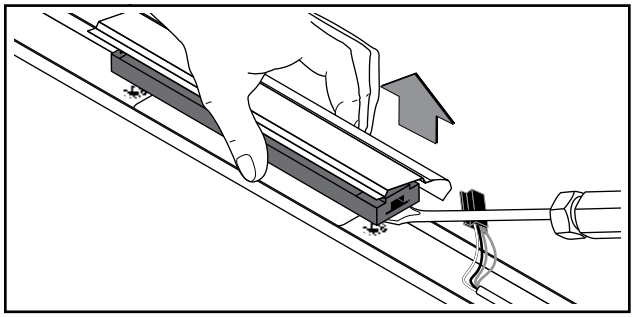

9. Carefully scrape any remaining adhesive residue from the inside of the Menu Bar.

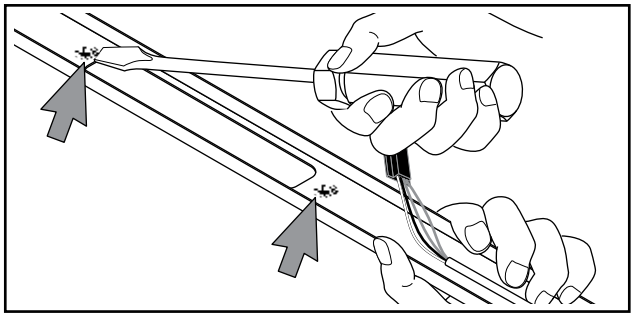

RESTORE:

10. Peel off the adhesive cover from the glue dots and place on the replacement Keypad Display.

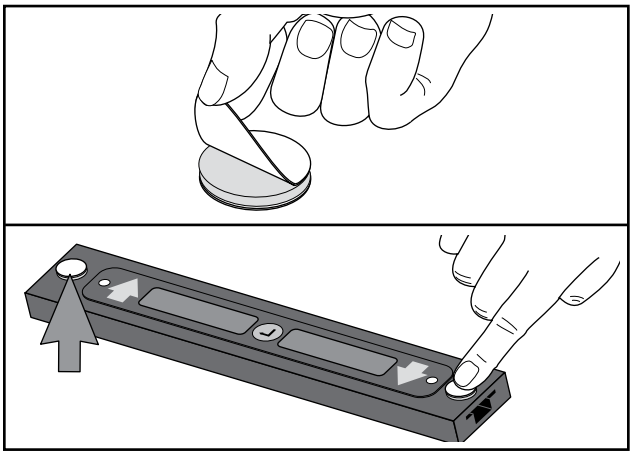

11. Peel off the other adhesive cover from the glue dots and carefully position the replacement Keypad Display in place on the interior side of the Menu Bar.

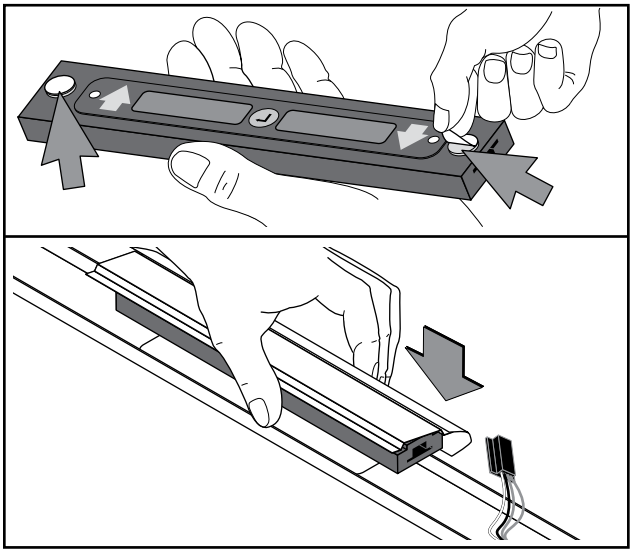

12. Reconnect the affected Keypad Display(s) electrical connector to the Menu Bar Harness.

13. Replace the Keypad Spacer, over the Menu Bar Harness, to the rear of the Keypad Display(s).

14. Reinstall the Menu Bar Back Channel using its screws.

15. Reinstall the Menu Bar using its screws.

16. Restore power to the unit and test for proper function.

RTD (TEMPERATURE) SENSORS

The RTD Sensors monitor the temperature of the heating wells. They are affixed to the bottom-center of each Heat Element, and the quantity varies (depending on model).

TOOLS REQUIRED: Phillips screwdriver; Aluminum tape; Tie wraps

1. Place the unit's Power Switch in the OFF position and follow the proper Lockout/Tagout procedures.
2. Remove any pans and covers on the level(s) being removed.

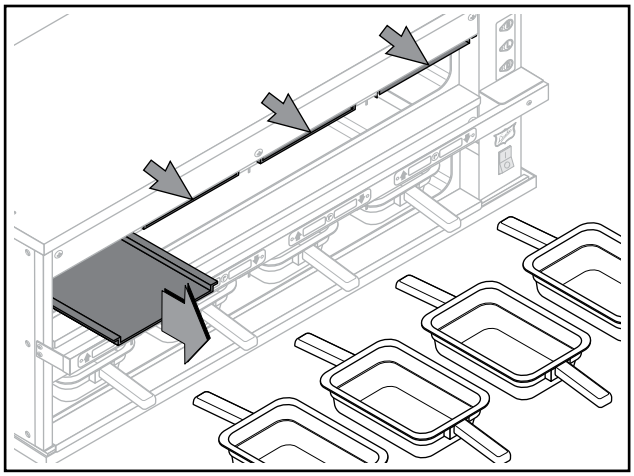

3. Remove and retain the screws securing the Top Panel and remove the cover.

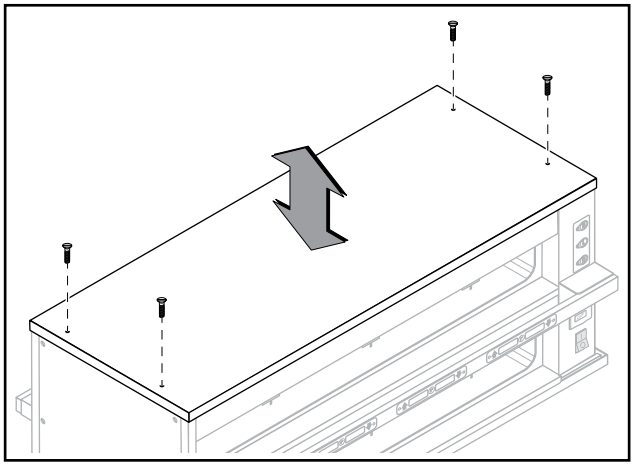

4. Remove and retain the screws securing the Control Side Cover and remove the cover.

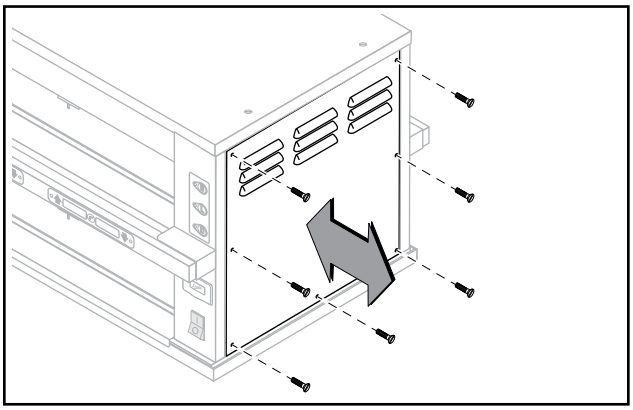

NOTE: If the RTD Sensor to be replaced is on a lower level, start from the top and repeat the following four steps for each level above the desired level.

5. Mark, remove the tie wraps, and disconnect the wires for the RTD Sensors from the RTD board in the Control Compartment.

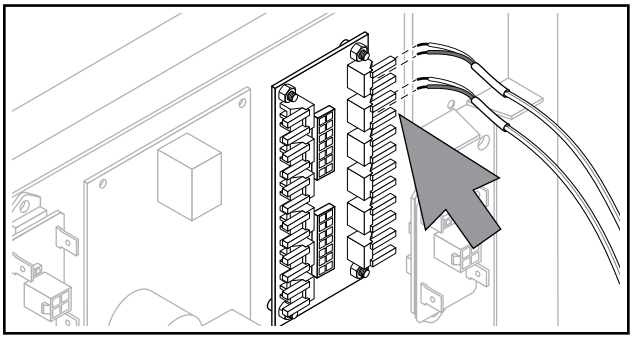

6. Mark, remove the tie wraps, and disconnect the wires for the Emitter (IR Bulb) Sockets and Heat Elements from the Relays in the Control Compartment.

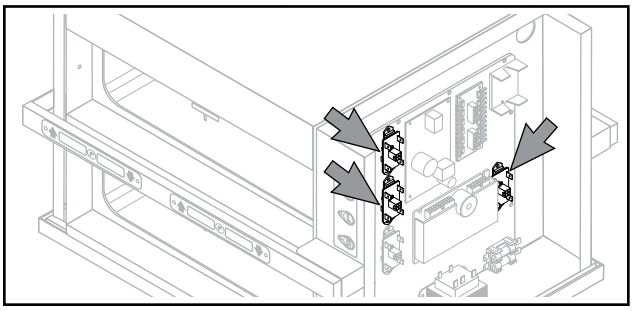

7. Remove the four (4) screws (2 in front, 2 in back) securing the liner deck assembly to the unit.

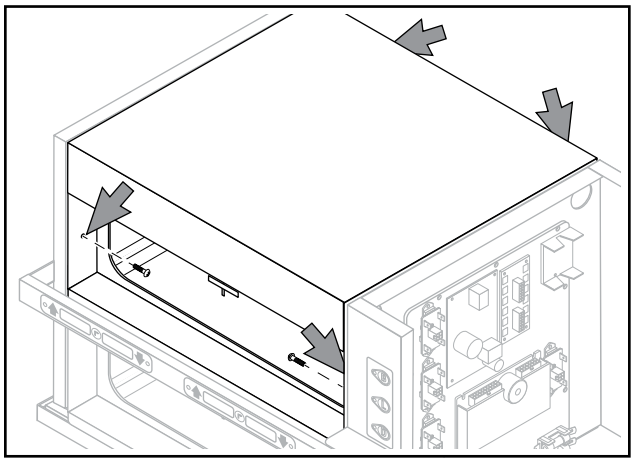

8. Carefully lift the entire liner deck assembly out through the top of the unit. This may require two people, depending on the location of the IRHS unit. Though not required to do so, removing the level's IR glass frame assembly (instructions are contained in the Emitter instructions) will lighten the weight of the liner deck assembly and make it easier for one person to accomplish this task if the IRHS is located in an elevated location or has limited access.

NOTE: It will be necessary to feed the RTD Sensor, Emitter, and Heat Element wires through the control compartment bushings. Take caution not to damage any of the wires.

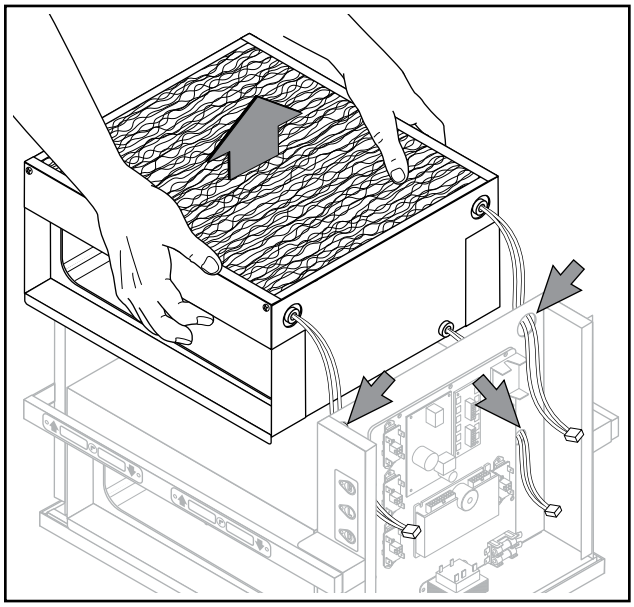

9. Invert the liner deck assembly upside-down, then remove and retain the insulation.

10. The RTD Sensor is attached to the heat element with double-sided adhesive tape and covered with aluminum tape. Carefully pry off and remove the affected RTD Sensor from the Heat Element.

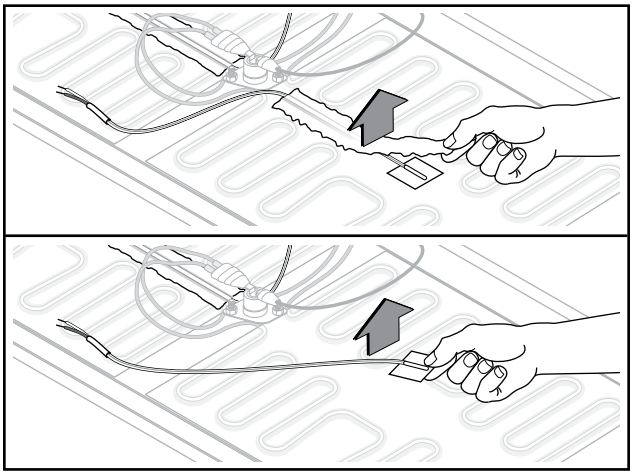

RESTORE:

11. Peel off the adhesive tape cover from the replacement RTD Sensor and press in place on the heat element. Replace aluminum tape cover.

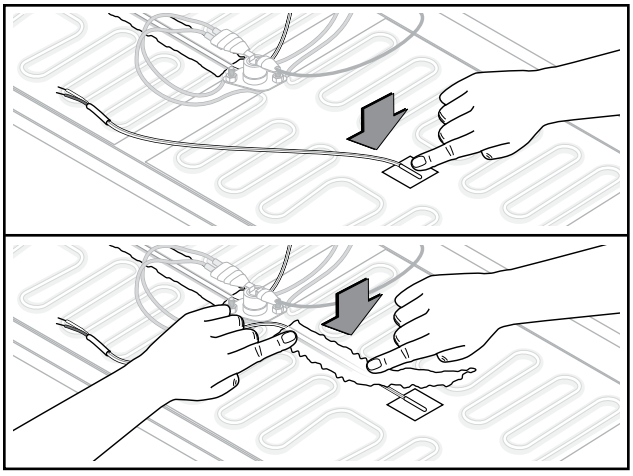

12. Feed the Heat Element and RTD Sensor wires in the direction of and through the control compartment bushings and replace the insulation.

13. Invert the liner deck assembly right-side up. While feeding the RTD Sensor, Emitter, and Heat Element wires through the appropriate control compartment bushings, carefully slide the liner deck assembly into the unit, taking caution not to damage any of the wires.

NOTE: This may require two people, depending on the location of the IRHS unit.

14. Reconnect and tie wrap all previously disconnected wires and connectors in the control compartment.
15. Replace the Control Side Cover and secure with its screws.
16. Replace the Top Panel and secure with its screws.
17. Restore power to the unit and test for proper function.

HIGH LIMIT THERMOSTATS

The High Limit Thermostats monitor well temperatures and serves as an emergency circuit interrupter in case of inadvertent overheating. There is one per level, and are affixed to the bottom-center of each heat sink.

TOOLS REQUIRED: Phillips screwdriver; Heat transfer compound; Tie wraps

1. Place the unit's Power Switch in the OFF position and follow the proper Lockout/Tagout procedures.
2. Remove any pans and covers on the level(s) being removed.

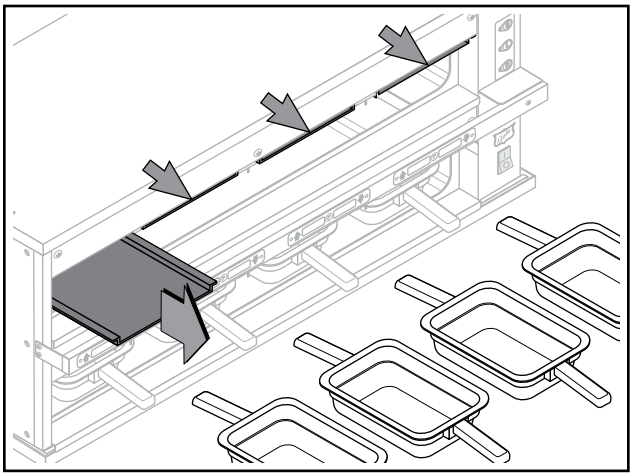

3. Remove and retain the screws securing the Top Panel and remove the cover.

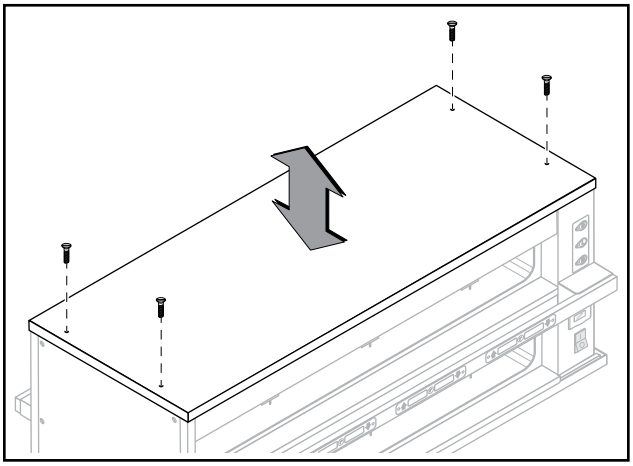

4. Remove and retain the screws securing the Control Side Cover and remove the cover.

NOTE: If the High Limit Thermostat to be replaced is on a lower level, start from the top and repeat the following four steps for each level above the desired level.

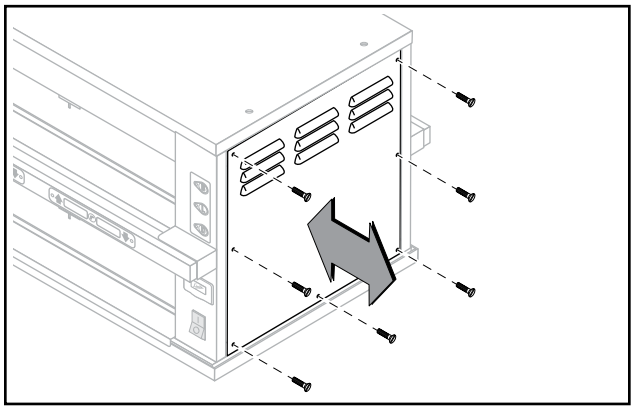

5. Mark, remove the tie wraps, and disconnect the wires for the RTD Sensors from the RTD board in the Control Compartment.

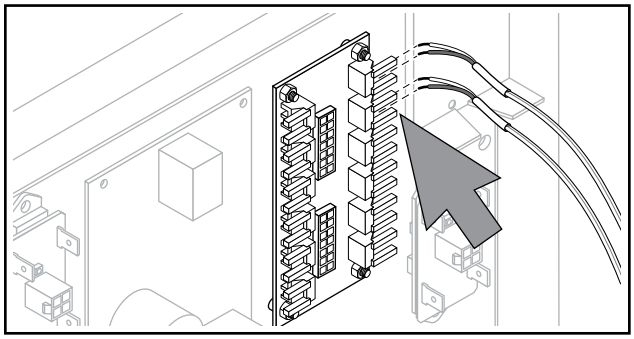

6. Mark, remove the tie wraps, and disconnect the wires for the Emitter (IR Bulb) Sockets and Heat Elements from the Relays in the Control Compartment.

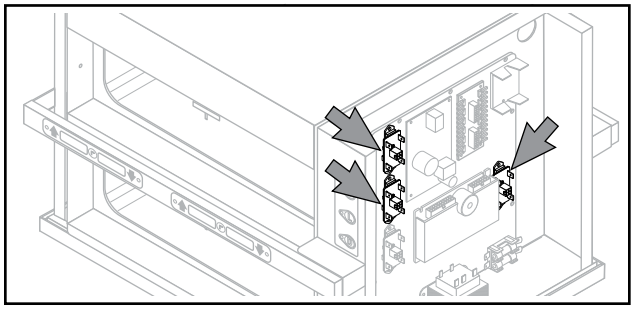

7. Remove the four (4) screws (2 in front, 2 in back) securing the liner deck assembly to the unit.

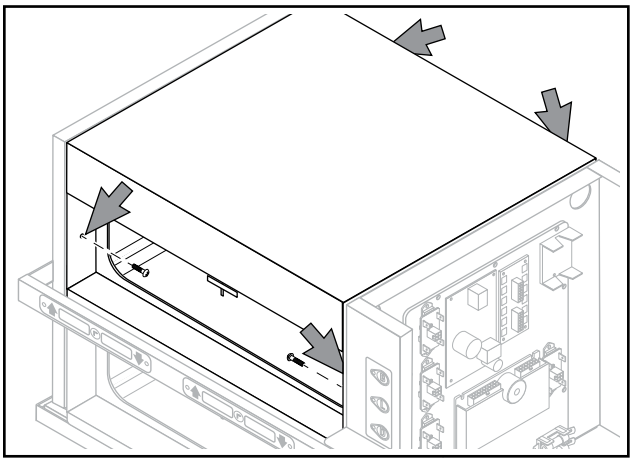

8. Carefully lift the entire liner deck assembly out through the top of the unit. This may require two people, depending on the location of the IRHS unit. Though not required to do so, removing the level's IR glass frame assembly (instructions are contained in the Emitter instructions) will lighten the weight of the liner deck assembly and make it easier for one person to accomplish this task if the IRHS is located in an elevated location or has limited access.

NOTE: It will be necessary to feed the RTD Sensor, Emitter, and Heat Element wires through the control compartment bushings. Take caution not to damage any of the wires.

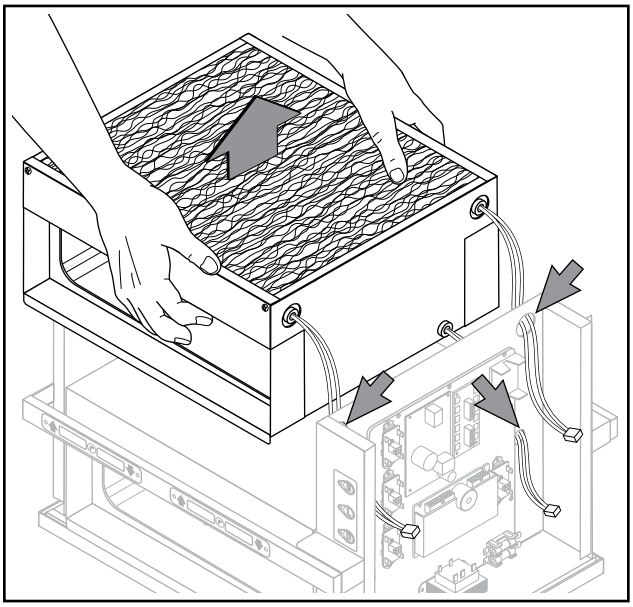

9. Invert the liner deck assembly upside-down, then remove and retain the insulation.

10. Mark and disconnect the spade terminals for the affected High Limit Thermostat.

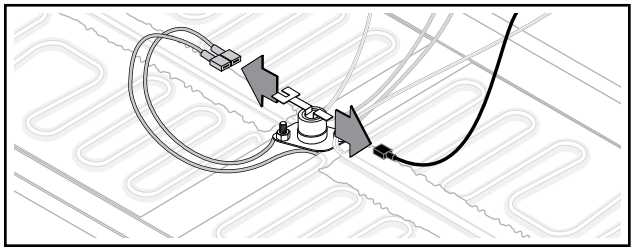

11. Remove and retain the two (2) 11/32" nuts securing the High Limit Thermostat to the heat sink and remove the High Limit Thermostat.

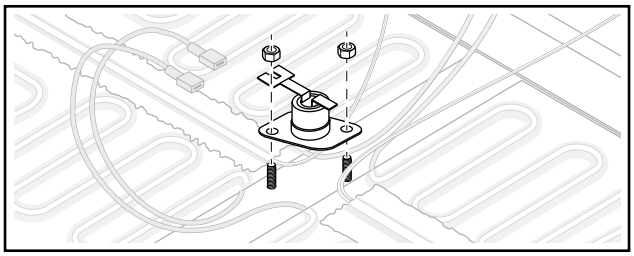

12. Clean the mounting surface of any residual heat transfer compound.

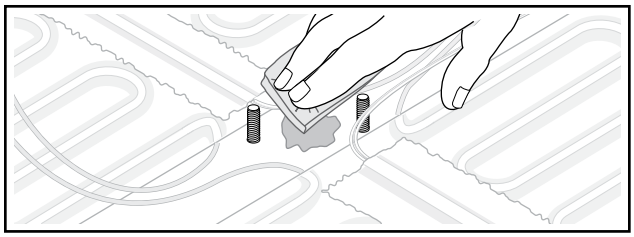

RESTORE:

13. Apply heat transfer compound to the mounting surface of the replacement High Limit Thermostat.

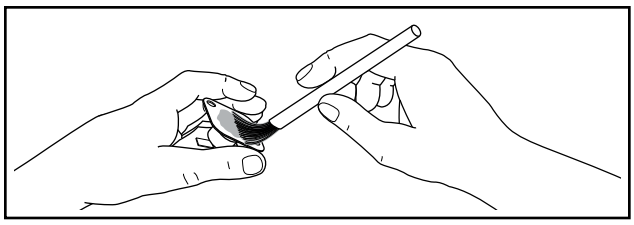

14. Install the replacement High Limit Thermostat and secure with its nuts.

15. Reattach the High Limit Thermostat spade terminals. Be sure to reapply the tape that helps secure the spade terminals to the High Limit Thermostat.

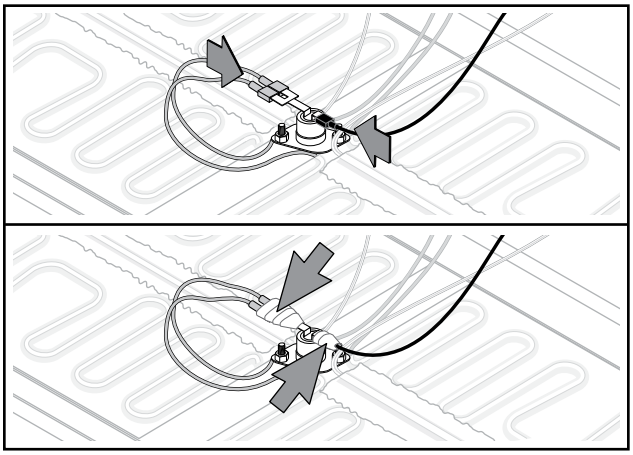

16. Feed the Heat Element and RTD Sensor wires in the direction of and through the control compartment bushings and replace the insulation.

17. Invert the liner deck assembly right-side up. While feeding the RTD Sensor, Emitter, and Heat Element wires through the appropriate control compartment bushings, carefully slide the liner deck assembly into the unit, taking caution not to damage any of the wires.

NOTE: This may require two people, depending on the location of the IRHS unit.

18. Reconnect and tie wrap all previously disconnected wires and connectors in the control compartment.

19. Replace the Control Side Cover and secure with its screws.

20. Replace the Top Panel and secure with its screws.

21. Restore power to the unit and test for proper function.

HEAT ELEMENTS

The Heat Elements provide the heating required to keep the heating wells at proper operating temperatures. The quantity varies depending on model and are affixed to the bottom of each Heat Sink.

TOOLS REQUIRED: Phillips screwdriver; 11/32" nut driver or socket; Heat transfer compound; Tie wraps

1. Place the unit's Power Switch in the OFF position and follow the proper Lockout/Tagout procedures.
2. Remove any pans and covers on the level(s) being removed.

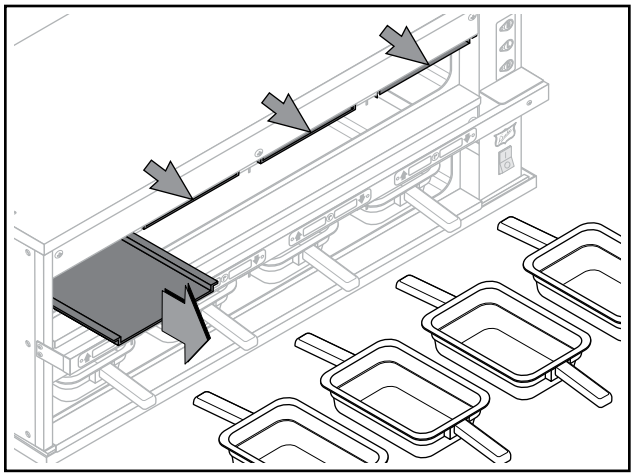

3. Remove and retain the screws securing the Top Panel and remove the cover.

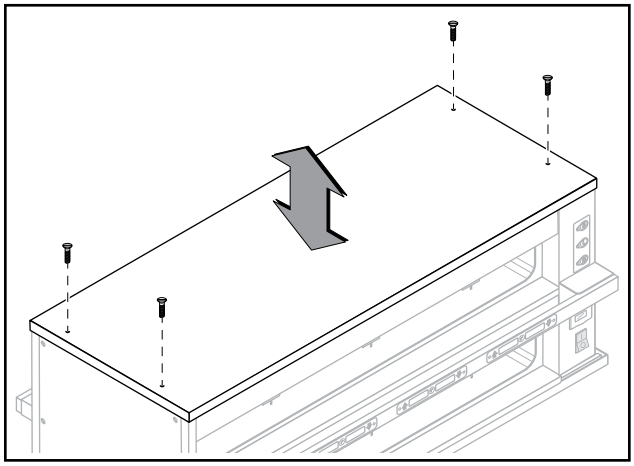

4. Remove and retain the screws securing the Control Side Cover and remove the cover.

NOTE: If the Heat Element to be replaced is on a lower level, start from the top and repeat the following four steps for each level above the desired level.

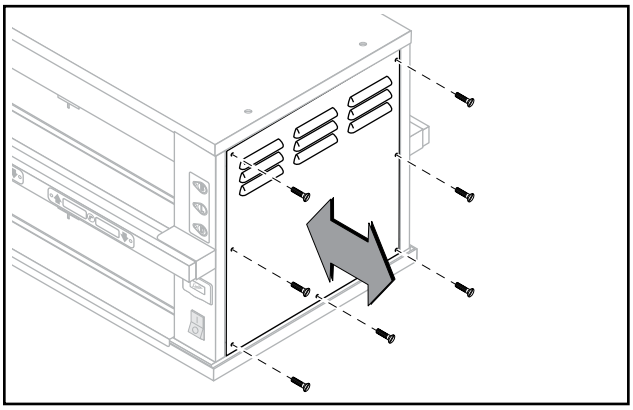

5. Mark, remove the tie wraps, and disconnect the wires for the RTD Sensors from the RTD board in the Control Compartment.

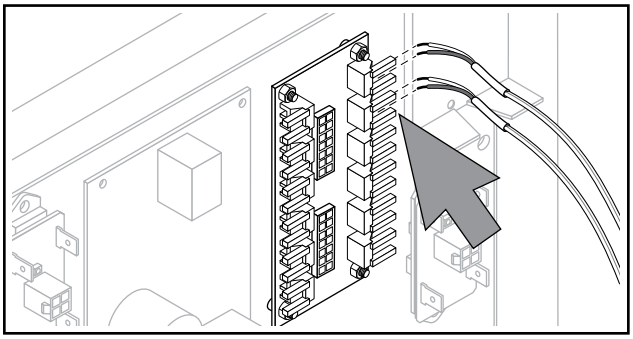

6. Mark, remove the tie wraps, and disconnect the wires for the Emitter (IR Bulb) Sockets and Heat Elements from the Relays in the Control Compartment.

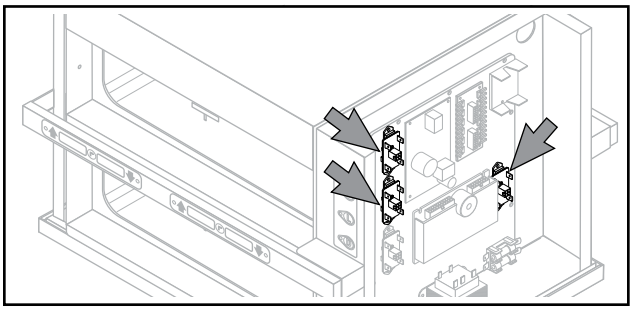

7. Remove the four (4) screws (2 in front, 2 in back) securing the liner deck assembly to the unit.

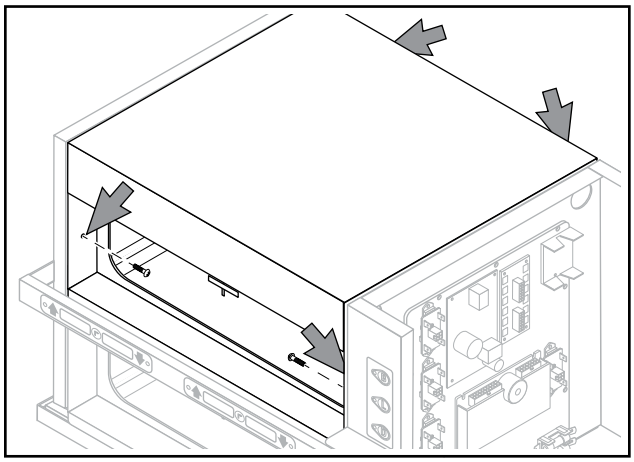

8. Carefully lift the entire liner deck assembly out through the top of the unit. This may require two people, depending on the location of the IRHS unit. Though not required to do so, removing the level's IR glass frame assembly (instructions are contained in the Emitter instructions) will lighten the weight of the liner deck assembly and make it easier for one person to accomplish this task if the IRHS is located in an elevated location or has limited access.

NOTE: It will be necessary to feed the RTD Sensor, Emitter, and Heat Element wires through the control compartment bushings. Take caution not to damage any of the wires.

9. Invert the liner deck assembly upside-down, then remove and retain the insulation.

10. Mark and disconnect the spade terminals for the level's High Limit Thermostat.

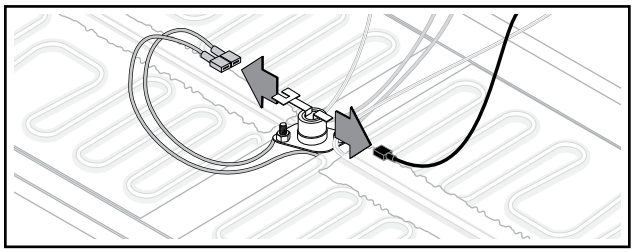

11. Remove and retain the two (2) 11/32" nuts securing the High Limit Thermostat to the heat sink and remove the High Limit Thermostat.

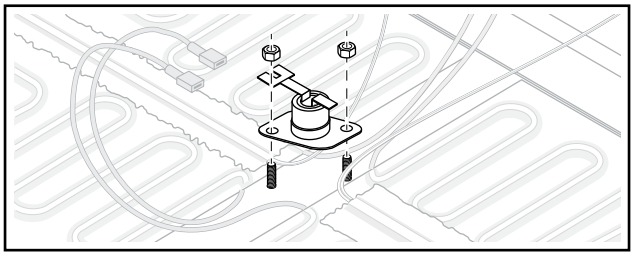

12. Clean the mounting surface of any residual heat transfer compound.

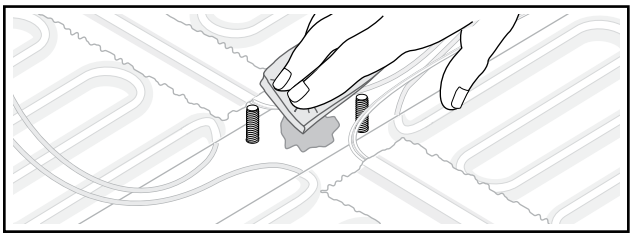

13. Remove the affected Heat Element by peeling off from the heat sink. Ensure any excess tape and/or adhesive is removed.

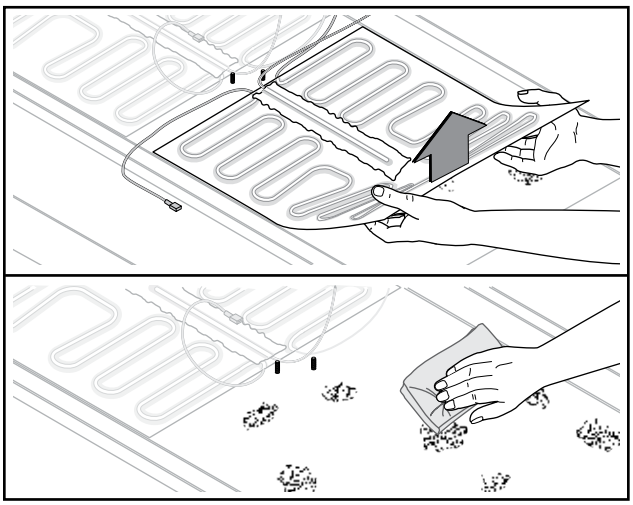

NOTE: The replacement Heat Element will come with a new RTD Sensor attached, so retaining the existing RTD Sensor is unnecessary.

14. Peel the adhesive tape cover off the replacement Heat Element and press in place on the heat sink, ensuring all air bubbles are smoothed out.

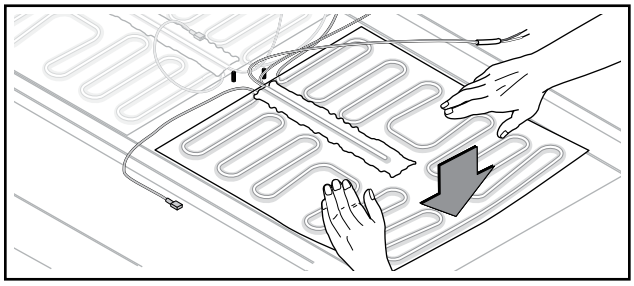

RESTORE:

15. Apply heat transfer compound to the mounting surface of the High Limit Thermostat.

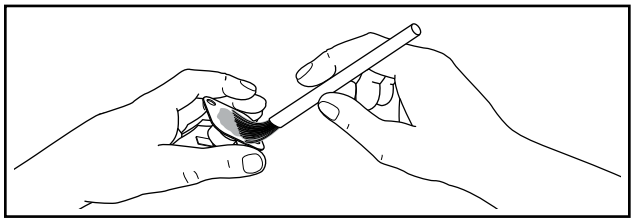

16. Reinstall the High Limit Thermostat and secure with its nuts.

17. Reattach the High Limit Thermostat spade terminals. Be sure to reapply the tape that helps secure the spade terminals to the High Limit Thermostat.

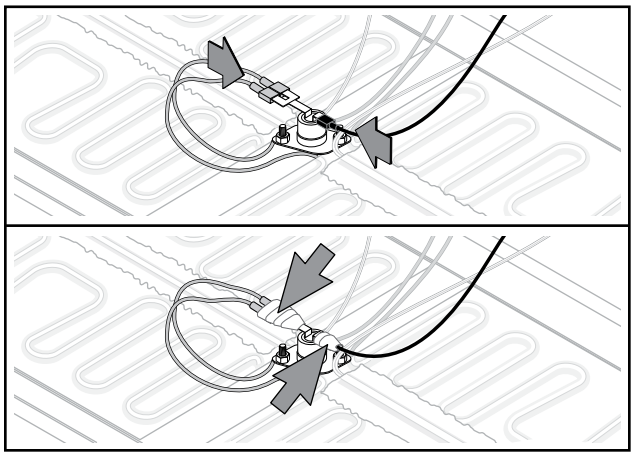

18. Feed the Heat Element and RTD Sensor wires in the direction of and through the control compartment bushings and replace the insulation.

19. Invert the liner deck assembly right-side up. While feeding the RTD Sensor, Emitter, and Heat Element wires through the appropriate control compartment bushings, carefully slide the liner deck assembly into the unit, taking caution not to damage any of the wires.

NOTE: This may require two people, depending on the location of the IRHS unit.

20. Reconnect and tie wrap all previously disconnected wires and connectors in the control compartment.

21. Replace the Control Side Cover and secure with its screws.

22. Replace the Top Panel and secure with its screws.

23. Restore power to the unit and test for proper function.

EMITTER (IR BULB) SOCKETS

The Emitter Sockets hold and provide power to the Emitters. There are two (2: 1 front, 1 back) at the top of each heating well.

TOOLS REQUIRED: Phillips screwdriver; clean gloves/ cloths/towels; 11/16" open-end wrench; Tie wraps

1. Place the unit's Power Switch in the OFF position and follow the proper Lockout/Tagout procedures.
2. Remove all pans and covers from the liner deck assembly, and levels above where the affected Emitter Socket is to be replaced.
3. Remove and retain the screws securing the Top Panel and remove the cover.

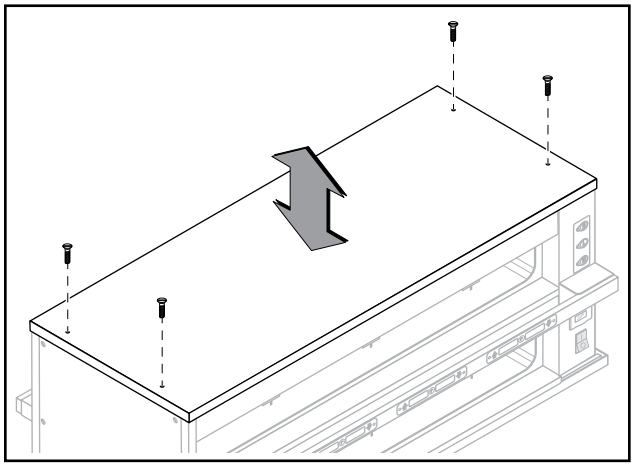

4. Remove and retain the screws securing the Control Side Cover and remove the cover.

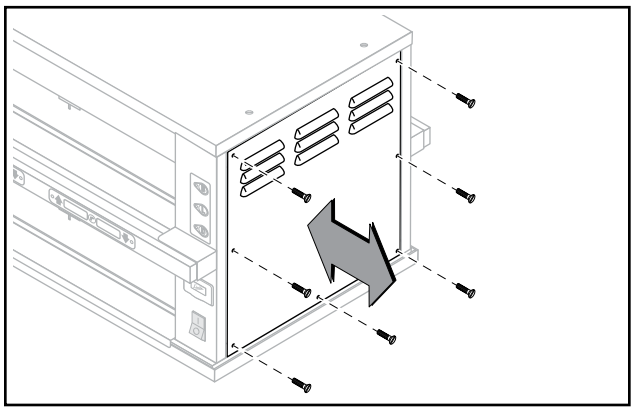

If the Emitter Socket to be replaced is on a lower level (not for top level replacement), starting from the second level, repeat the following five steps for each level above the desired repair level:

a. Remove and retain the screws securing the appropriate Menu Bar(s) and move to one side. It is not necessary, but recommended, to completely remove the Menu Bar from the unit. Menu Bar instructions are contained in this manual.

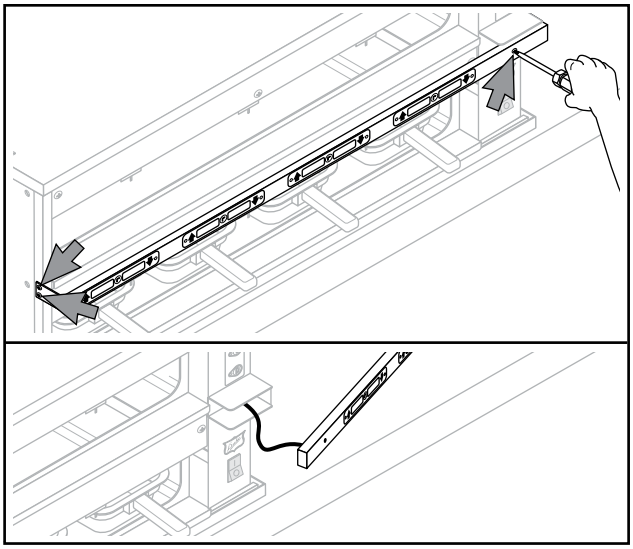

b. Mark, remove the tie wraps, and disconnect the wires for the RTD Sensors from the RTD board in the Control Compartment.

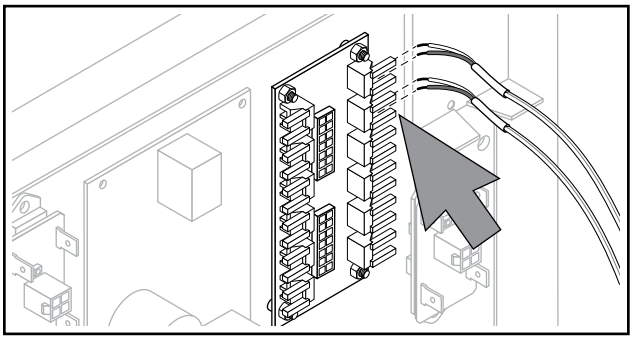

c. Mark, remove the tie wraps, and disconnect the wires for the Emitter (IR Bulb) Sockets and Heat Elements from the Relays in the Control Compartment.

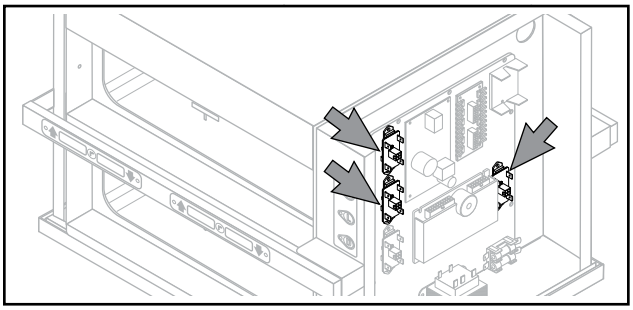

d. Remove the four (4) screws (2 in front, 2 in back) securing the liner deck assembly to the unit.

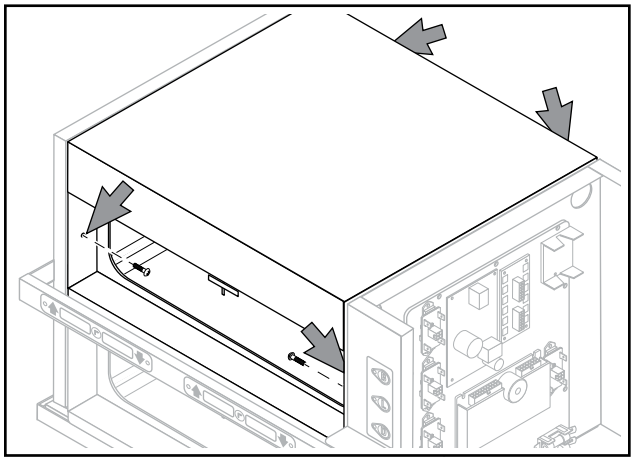

e. Carefully lift the entire liner deck assembly out through the top of the unit. This may require two people, depending on the location of the IRHS unit. Though not required to do so, removing the level's IR glass frame assembly (instructions are contained in the Emitter instructions) will lighten the weight of the liner deck assembly and make it easier for one person to accomplish this task if the IRHS is located in an elevated location or has limited access.

NOTE: It will be necessary to feed the RTD Sensor, Emitter, and Heat Element wires through the control compartment bushings. Take caution not to damage any of the wires.

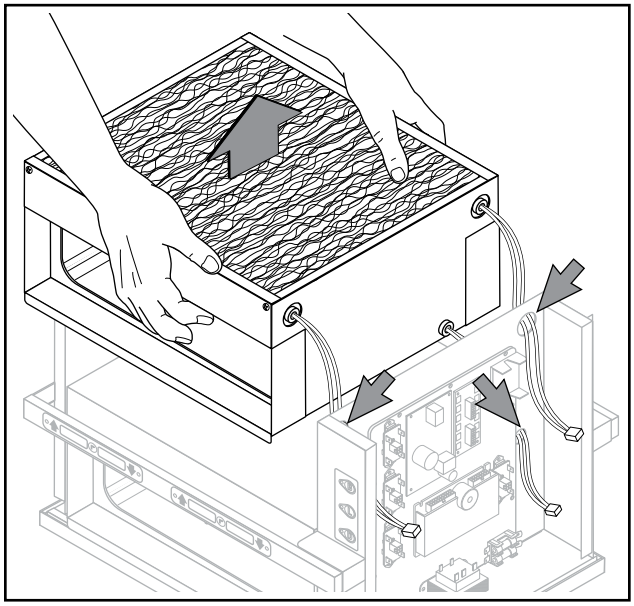

You will now have access to remove the nut securing socket in place.

5. Each liner deck's frame support angles (front and back) support the IR glass frame assembly in place. Remove and retain the screws securing the frame support angle on the row where the affected Socket is to be replaced and remove the frame support angle. Repeat for the other side of the liner deck assembly. Be careful to support and not let the IR glass frame assembly fall and damage the heat sink.

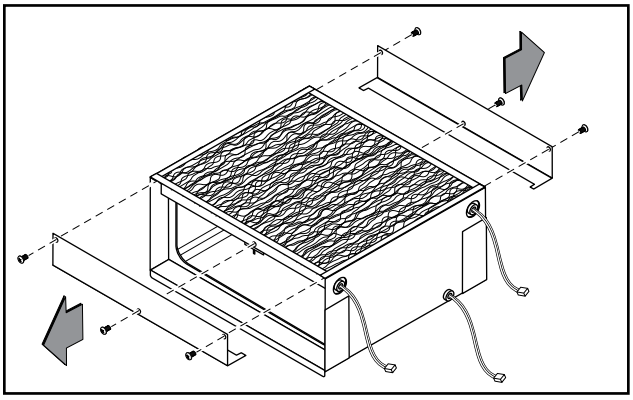

6. Slide the IR glass frame assembly out of the liner deck assembly below the Socket to be replaced.

NOTE: Make sure the glass has cooled off sufficiently to avoid burns to bare skin. Use gloves if necessary.

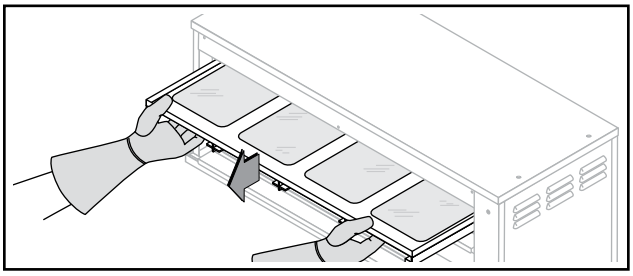

7. The Emitter Sockets are spring-loaded. Push the Emitter (IR Bulb) towards the rear socket until the Emitter is free from the front socket and carefully remove.

NOTE: DO NOT TOUCH THE EMITTER WITH BARE HANDS! The oil on human skin will shorten the life of the Emitters. If the Emitter is to be reused, use clean gloves, a clean cloth, or a clean paper towel to handle.

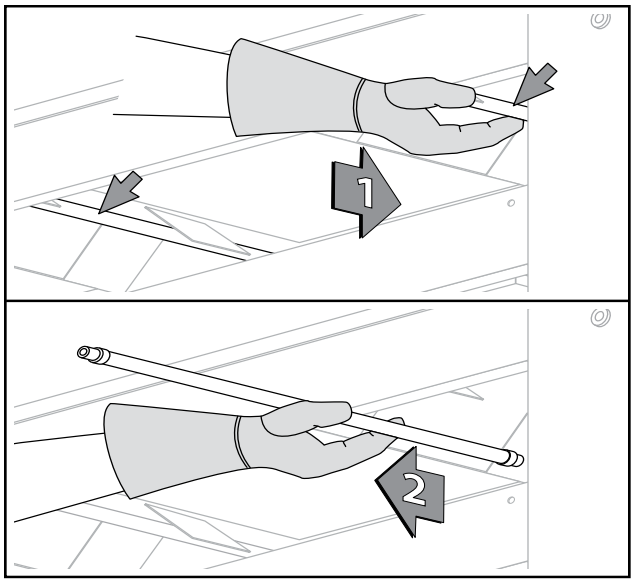

8. Mark and disconnect the faulty Emitter Socket's wires from the Relay in the control compartment.

9. Using an 11/16" open-end wrench, remove the nut securing the socket in place.

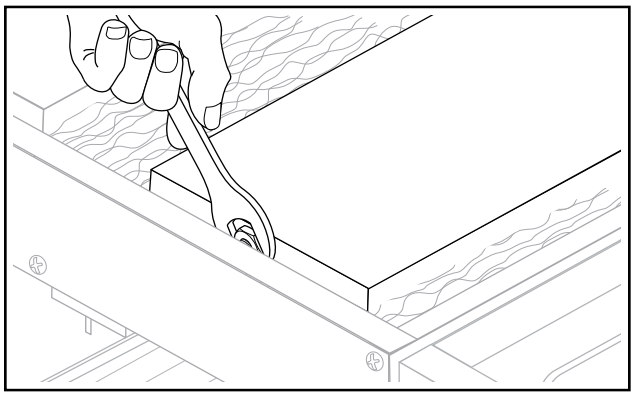

10. From the bulb side of the affected Socket, pull the Socket and its wires through its mounting hole.

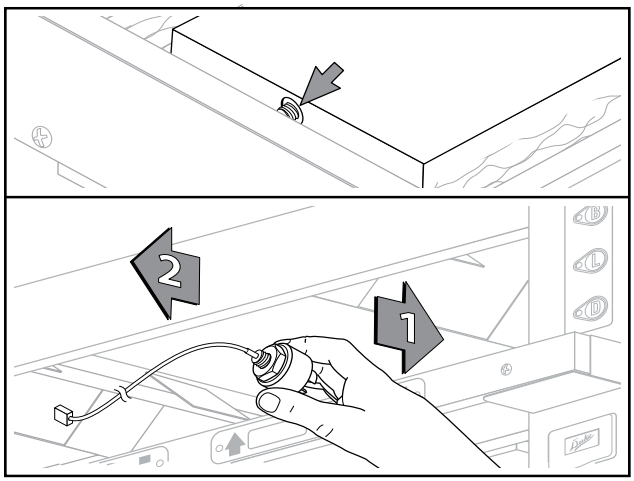

RESTORE:

11. Install the replacement Emitter Socket into its mounting hole and secure with its nut.

12. Using clean gloves, a clean cloth, or a clean paper towel, reinstall or insert the replacement Emitter into the rear socket first and then gently push inward until the front of the bulb can be inserted into the front socket.

13. Slide the IR glass frame assembly into the liner deck assembly.

14. Replace the frame support angles on the front and back and secure them with their screws.

15. If other liner deck assemblies were removed, starting with the lowest, feed their RTD Sensor, Emitter, and Heat Element wires through the appropriate control compartment bushings, and carefully slide the liner deck assemblies into the unit, taking caution not to damage any of the wires. Replace any moved/removed insulation.

NOTE: This may require two people, depending on the location of the IRHS unit.

16. If other liner deck assemblies were removed, reinstall their Menu Bar(s).

17. Reconnect and tie wrap all previously disconnected wires and connectors in the control compartment.

18. Replace the Control Side Cover and secure with its screws.

19. Replace the Top Panel and secure with its screws.

20. Restore power to the unit and test for proper function.

EMITTERS (IR BULBS)

The Emitters heat the top of each well. The quantity varies (depending on model) and are held in place by two Emitter Sockets at the top of each heating well.

TOOLS REQUIRED: Phillips screwdriver; clean gloves/ cloths/towels; Tie wraps

1. Place the unit's Power Switch in the OFF position and follow the proper Lockout/Tagout procedures.
2. Remove all pans and covers from the liner deck assembly where the affected Emitter is to be replaced.
3. If the Emitter to be replaced is on a lower level (not for top level replacement), remove and retain the screws securing the appropriate Menu Bar(s) and move to one side. It is not necessary, but recommended, to completely remove the Menu Bar from the unit. Menu Bar instructions are contained in this manual.
4. The liner deck assembly's frame support angles (front and back) support the IR glass frame assembly in place. Remove and retain the screws securing the frame support angle on the row where the affected Emitter is to be replaced and remove the frame support angle. Repeat for the other side of the liner deck assembly. Be careful to support and not let the IR glass frame assembly fall and damage the heat sink.

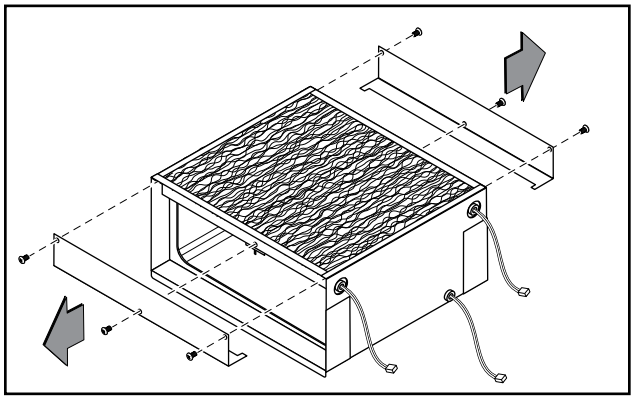

5. Slide the IR glass frame assembly out of the liner deck assembly below the Emitter to be replaced.

NOTE: Make sure the glass has cooled off sufficiently to avoid burns to bare skin. Use gloves if necessary.

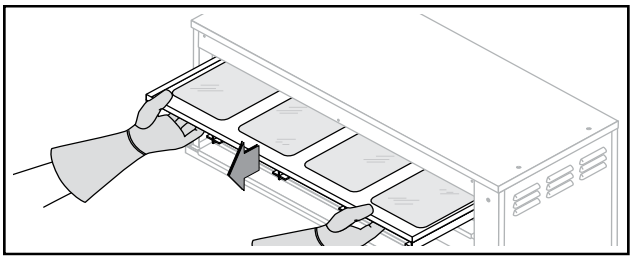

6. The Emitter Sockets are spring-loaded. Push the Emitter towards the rear socket until the Emitter is free from the front socket and carefully remove.

NOTE: DO NOT TOUCH THE EMITTER WITH BARE HANDS! The oil on human skin will shorten the life of the Emitters. If the Emitter is to be reused, use clean gloves, a clean cloth, or a clean paper towel to handle.

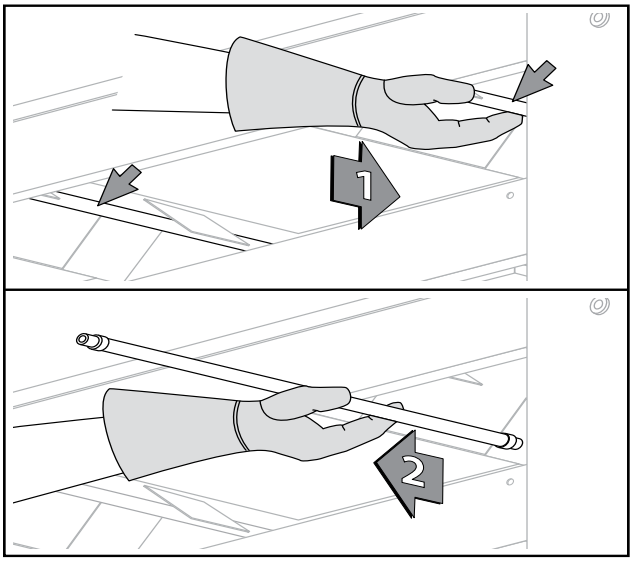

RESTORE:

7. Using clean gloves, a clean cloth, or a clean paper towel, reinstall or insert the replacement Emitter into the rear socket first and then gently push inward until the front of the bulb can be inserted into the front socket.
8. Slide the IR glass frame assembly into the liner deck assembly.
9. Replace the frame support angles on the front and back and secure them with their screws.
10. If removed, reinstall and reconnect the Menu Bar.
11. Restore power to the unit and test for proper function.

CONTROL COMPARTMENT COMPONENTS – STANDALONE & KITCHEN MINDER MODELS (ONLY)

POWER SWITCH

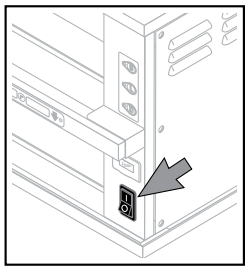

The Power Switch is located on the Control Panel on the face of the unit. It is accessed from inside the control compartment.

TOOLS REQUIRED:
Phillips screwdriver

1. Place the unit's Power Switch in the OFF position and follow the proper Lockout/Tagout procedures.
2. Remove and retain the screws securing the Control Side Cover and remove the cover.
3. From inside the control compartment, mark and disconnect all wires connected to the Power Switch.
4. The Power Switch is secured to the unit with spring clips and a spacer. Depress the spring clips and slide the switch from the unit.

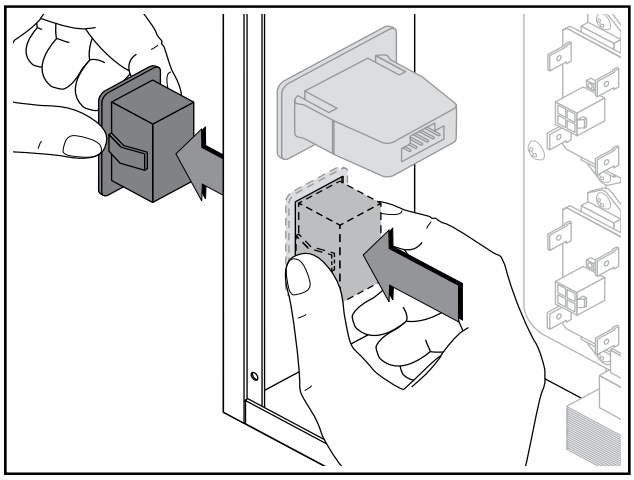

RESTORE:

5. Install the replacement Power Switch by sliding it into its position in the unit until secured with its spring clips.
6. Reattach the Power Switch wires.
7. Replace the Control Side Cover and secure with its screws.
8. Restore power to the unit and test for proper function.

USB ADAPTER

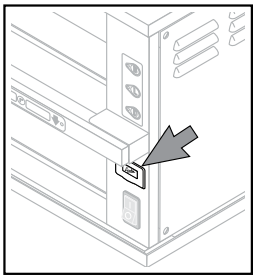

The USB Adapter is used to program the Controller when it is replaced or when the current recipes are corrupted. It is located on the Control Panel. It is accessed from inside the control compartment.

TOOLS REQUIRED: Phillips screwdriver

1. Place the unit's Power Switch in the OFF position and follow the proper Lockout/Tagout procedures.
2. Remove and retain the screws securing the Control Side Cover and remove the cover.
3. From inside the control compartment, unplug the molex connector from the rear of the USB port.
4. The USB Adapter is secured to the unit with prongs and a spacer. Depress the two (2) prongs securing the USB Adapter to the unit, and pull through the face of the unit.

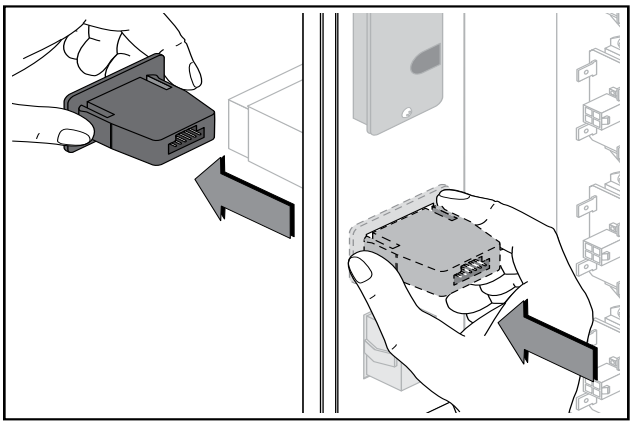

RESTORE:

5. Install the replacement USB Adapter by sliding it into its position in the unit until secured with its prongs.
6. Reattach the USB Adapter molex connector.
7. Replace the Control Side Cover and secure with its screws.
8. Restore power to the unit and test for proper function.

DAYPART SWITCH

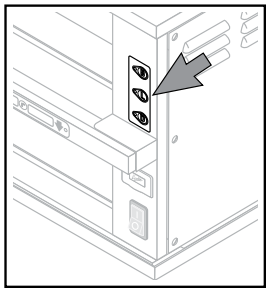

The Daypart Switch is used to control the temperatures of various food products, up to three different time periods a day. It is located on the Control Panel and is accessed from inside the control compartment.

TOOLS REQUIRED: Phillips screwdriver

1. Place the unit's Power Switch in the OFF position and follow the proper Lockout/Tagout procedures.
2. Remove and retain the screws securing the Control Side Cover and remove the cover.
3. From inside the control compartment, unplug the molex connector from the rear of the Daypart Switch.
4. The Daypart Switch is secured to the unit with its rear cover. Remove and retain the three (3) screws securing the Daypart Switch rear cover, then remove the switch and rear cover.

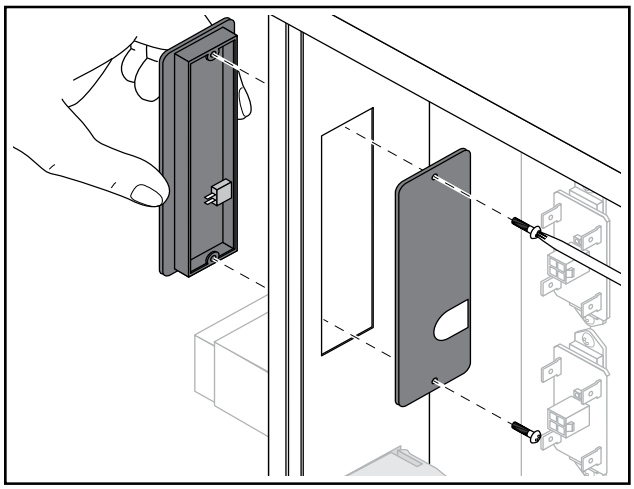

RESTORE:

5. Insert the replacement Daypart Switch into the unit and secure in place with its rear cover and screws.
6. Attach the molex connector to the replacement Daypart Switch.
7. Replace the Control Side Cover and secure with its screws.
8. Restore power to the unit and test for proper function.

RELAYS (Smart Power Modules)

The Relays control the Emitters (IR Bulbs) and Heat Elements. Each unit has several (depending on model) and are located inside the control compartment.

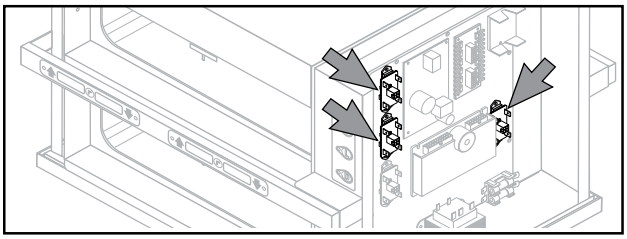

TOOLS REQUIRED: Phillips screwdriver; Heat transfer compound

1. Place the unit's Power Switch in the OFF position and follow the proper Lockout/Tagout procedures.
2. Remove and retain the screws securing the Control Side Cover and remove the cover.
3. Mark and disconnect all wires and molex plug to the affected Relay.
4. Remove and retain the screws securing the affected Relay to the unit.
5. Remove the affected Relay and clean the mounting surface of any residual heat transfer compound.

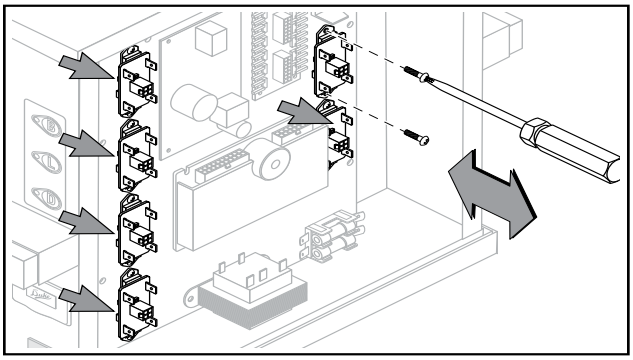

RESTORE:

6. Apply heat transfer compound to the mounting surface of the replacement Relay.
7. Install the replacement Relay and secure with its screws.
8. Reconnect the Relay wires and plug.
9. Replace the Control Side Cover and secure with its screws.
10. Restore power to the unit and test for proper function.

CONTROLLER

The Controller is used to control the Relays and RTD Sensors. It is located inside the control compartment.

TOOLS REQUIRED: Phillips screwdriver; #1 precision screwdriver

1. Place the unit's Power Switch in the OFF position and follow the proper Lockout/Tagout procedures.
2. Remove and retain the screws securing the Control Side Cover and remove the cover.
3. Disconnect the two (2) molex connectors connected to the Controller.
4. Using a small Phillips screwdriver or #1 precision screwdriver, remove and retain the four (4) screws securing the Controller to the unit.
5. Maintaining the spacers on the studs, remove the Controller.

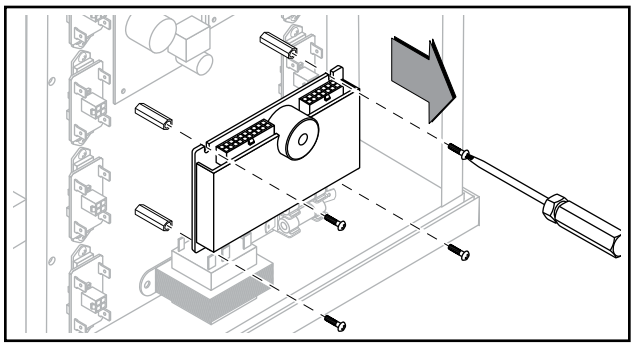

RESTORE:

6. Install the replacement Controller on its studs and secure with its screws.
7. Reconnect the two (2) molex connectors.
8. Replace the Control Side Cover and secure with its screws.
9. Restore power to the unit and test for proper function.

NOTE: To program the new Controller, see programming instructions located the "WEBSITE PROGRAMMING" section of this manual.

TRANSFORMER

The Transformer is used to step-down power to 12 VAC for the Controller. It is located inside the control compartment.

TOOLS REQUIRED: Phillips screwdriver

1. Place the unit's Power Switch in the OFF position and follow the proper Lockout/Tagout procedures.
2. Remove and retain the screws securing the Control Side Cover and remove the cover.
3. Mark and disconnect the spade connectors connected to the Transformer.
4. Remove and retain the two (2) screws securing the Transformer to the unit and remove the Transformer.

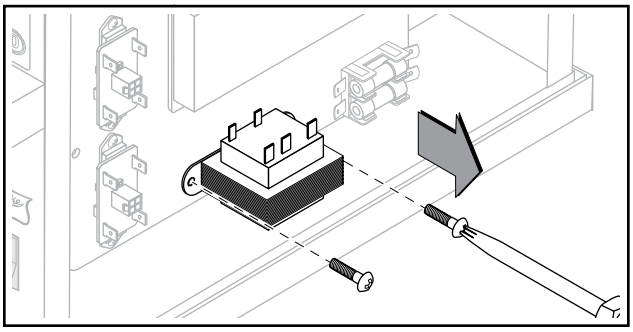

RESTORE:

5. Install the replacement Transformer and secure with its screws.
6. Reconnect the spade connectors.
7. Replace the Control Side Cover and secure with its screws.
8. Restore power to the unit and test for proper function.

RTD BOARD

The RTD Board controls the RTD Sensors. It is located inside the control compartment.

TOOLS REQUIRED: Phillips screwdriver; ESD strap; 1/4" nut driver or socket

1. Place the unit's Power Switch in the OFF position and follow the proper Lockout/Tagout procedures.
2. Remove and retain the screws securing the Control Side Cover and remove the cover.
3. Mark and disconnect all wires and the molex plug to the RTD Board.

NOTE: The use of an ESD Wrist Strap is strongly recommended. Follow ESD procedures on page 11.

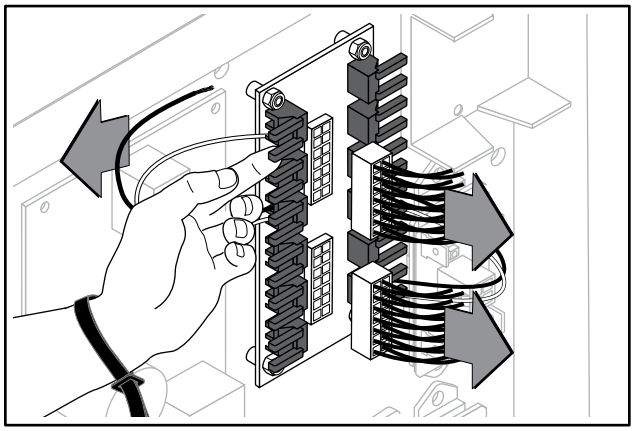

4. Remove and retain the four (4) 1/4" nuts securing the affected RTD Board to the unit.
5. Maintaining the spacers on the studs, remove the RTD Board.

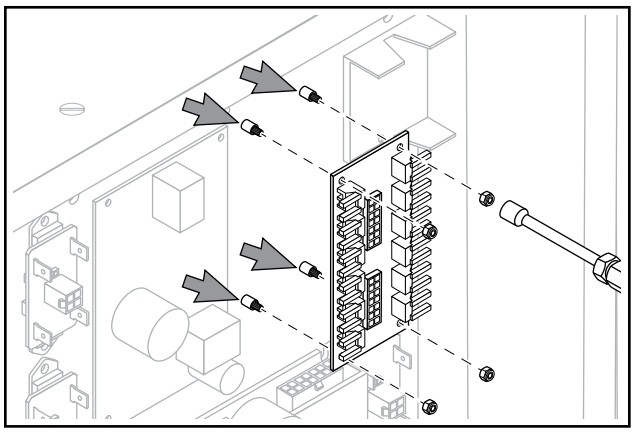

RESTORE:

6. Wearing the ESD Wrist Strap, and following ESD procedures, install the replacement RTD Board and secure with its screws.
7. Reconnect the RTD Board wires and plug.
8. Replace the Control Side Cover and secure with its screws.
9. Restore power to the unit and test for proper function.

FUSES AND FUSE HOLDER

The Fuses and Fuse Holder serve as a circuit interrupter from the main power input. They are located inside the control compartment.

TOOLS REQUIRED: Phillips screwdriver

1. Place the unit's Power Switch in the OFF position and follow the proper Lockout/Tagout procedures.
2. Remove and retain the screws securing the Control Side Cover and remove the cover.

FOR FUSE REPLACEMENT:

3. Remove the fuses and test with an ohm meter.
4. Replace the fuse(s) with correctly rated fuse(s):

Models 2x2, 2x3, 2x4, 4x2	12 Amp
Model 3x4	16 Amp

NOTE: Replacing fuse(s) with an incorrect rating can cause nuisance blowing if rating is too low, or a loss of circuit protection if too high. Damage to the equipment and risk of fire may result. Replace fuse(s) with correctly rated fuse(s) only.

5. Replace the Control Side Cover and secure with its screws.
6. Restore power to the unit and test for proper function.

FOR FUSE HOLDER REPLACEMENT:

1. Place the unit's Power Switch in the OFF position and follow the proper Lockout/Tagout procedures.
2. Remove and retain the screws securing the Control Side Cover and remove the cover.
3. Disconnect the spade connectors connected to the Fuse Holder.
4. Remove and retain the screws securing the Fuse Holder to the unit and remove the Fuse Holder.

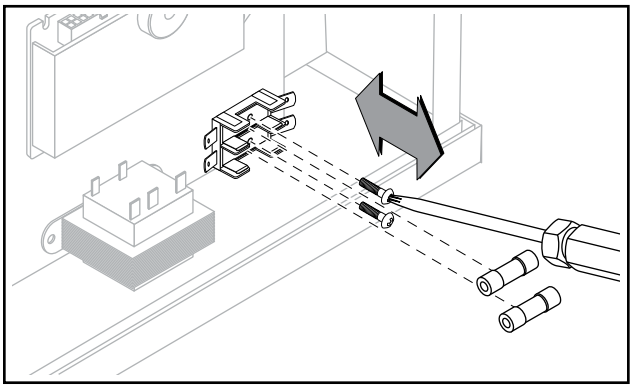

RESTORE:

5. Install the replacement Fuse Holder and secure with its screws.
6. Reconnect the spade connectors.
7. INSTALL CORRECTLY RATED FUSES ONLY! Damage to the equipment and/or risk of fire may result if installing fuses with incorrect ratings.
8. Replace the Control Side Cover and secure with its screws.
9. Restore power to the unit and test for proper function.

CONTROL COMPARTMENT COMPONENTS – KITCHEN MINDER MODEL (ONLY)

NOTE: The following components are installed, in addition to all previously listed control compartment components, in the Kitchen Minder model of the IRHS.

NOTE: THE USE OF AN ESD WRIST STRAP IS STRONGLY RECOMMENDED. FOLLOW ESD PROCEDURES ON PAGE 11.

KITCHEN MINDER MASTER BOARD (if installed)

If Kitchen Minder is installed in the unit, the Kitchen Minder Master Board is located behind the Control Side Cover.

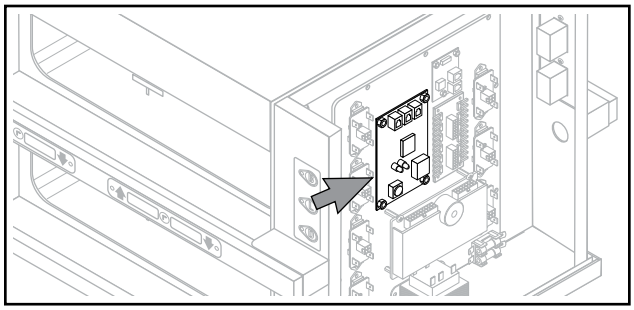

TOOLS REQUIRED: Phillips screwdriver; ESD strap; 1/4" nut driver or socket

1. Place the unit's Power Switch in the OFF position and follow the proper Lockout/Tagout procedures.
2. Remove and retain the screws securing the Control Side Cover and remove the cover.
3. Mark and disconnect the lines connected to the Master Board.
4. Remove and retain the four (4) 1/4" nuts securing the affected Master Board to the unit.
5. Maintaining the spacers on the studs, remove the Master Board.

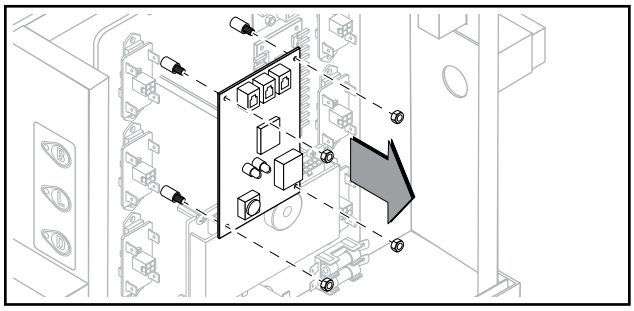

RESTORE:

6. Wearing the ESD Wrist Strap, and following ESD procedures, install the replacement Master Board on its studs and secure with its screws.
7. Reconnect the lines.
8. Replace the Control Side Cover and secure with its screws.
9. Restore power to the unit and test for proper function.

NOTE: THE USE OF AN ESD WRIST STRAP IS STRONGLY RECOMMENDED. FOLLOW ESD PROCEDURES ON PAGE 11.

KITCHEN MINDER ADAPTER BOARD (if installed)

If Kitchen Minder is installed in the unit, the Kitchen Minder Adapter Board is located behind the Control Side Cover.

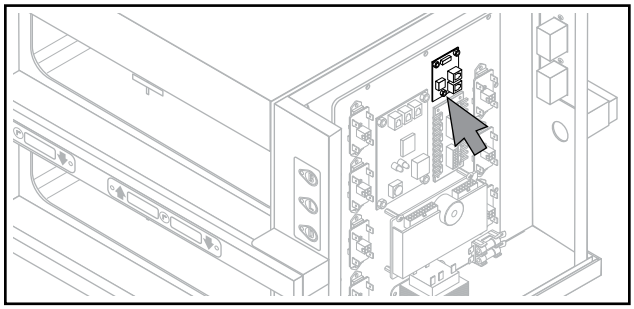

TOOLS REQUIRED: Phillips screwdriver; ESD strap; 1/4" nut driver or socket

1. Place the unit's Power Switch in the OFF position and follow the proper Lockout/Tagout procedures.
2. Remove and retain the screws securing the Control Side Cover and remove the cover.
3. Mark and disconnect the line and molex plug connected to the Adapter Board.
4. Remove and retain the three (3) 1/4" nuts securing the Adapter Board to the unit.
5. Maintaining the spacers on the studs, remove the Adapter Board.

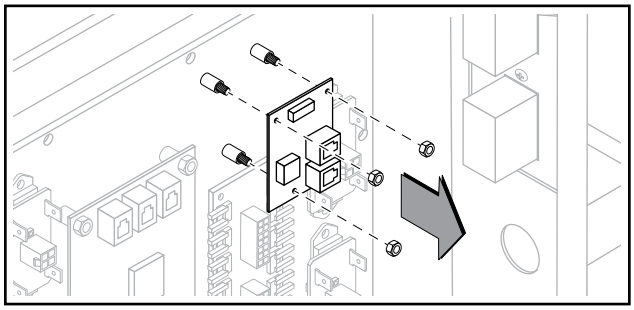

RESTORE:

6. Wearing the ESD Wrist Strap, and following ESD procedures, install the replacement Adapter Board on its studs and secure with its screws.
7. Reconnect the line and molex plug to the Adapter Board.
8. Replace the Control Side Cover and secure with its screws.
9. Restore power to the unit and test for proper function.

MOUNTING PLATE (if installed)

If Kitchen Minder is installed in the unit, the Mounting Plate is located in the rear control panel. The Mounting Plate holds the Couplers. The type depends on the specific model: Domestic (2-Hole) and CE (2-Hole or 3-Hole).

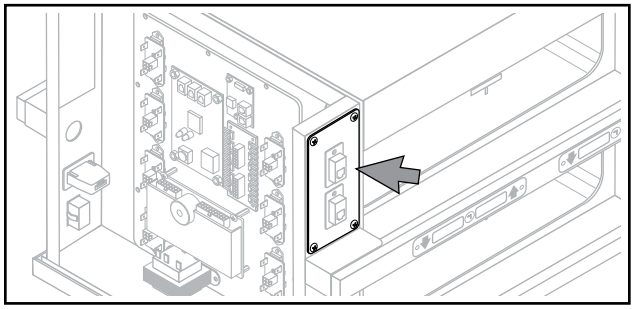

TOOLS REQUIRED: Phillips screwdriver

1. Place the unit's Power Switch in the OFF position and follow the proper Lockout/Tagout procedures.
2. Remove and retain the screws securing the Control Side Cover and remove the cover.
3. Mark and disconnect any communication lines attached to both sides of the Couplers contained in the Mounting Plate.
4. **If intending to retain and reuse the existing Couplers,** remove and retain the Couplers and their mounting screws (two per coupler).

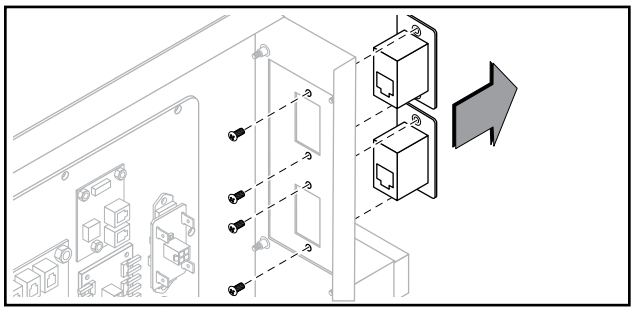

5. Remove and retain the four (4) screws securing the Mounting Plate to the rear control panel.

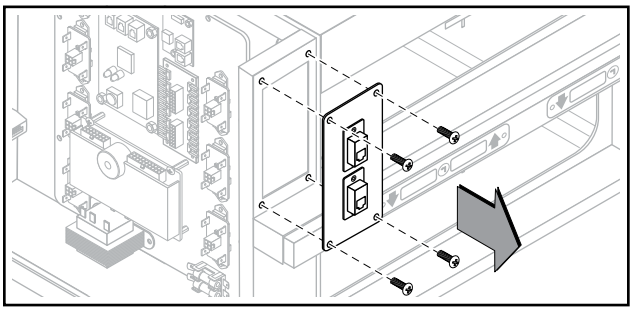

RESTORE:

6. Install the replacement Mounting Plate in the rear control panel and secure with its screws.
7. If necessary, reinstall the Couplers into the Mounting Plate with their screws.
8. Reconnect the communication lines to the Couplers.
9. Replace the Control Side Cover and secure with its screws.
10. Restore power to the unit and test for proper function.

COUPLERS (if installed)

If Kitchen Minder is installed in the unit, the Couplers are located in the Mounting Plate on the rear Control Panel. Couplers are the connection point between the Master and Satellite Kitchen Minder units allowing them to be connected and communicate. The quantity varies depending on the specific model – two (2; one RJ45 and one RJ12) in the Domestic model or three (3; all CAT5/RJ45) in the CE model.

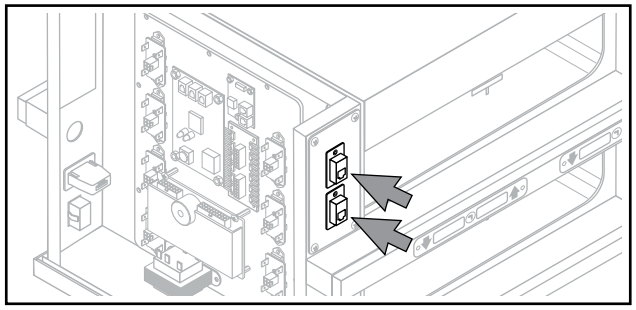

TOOLS REQUIRED: Phillips screwdriver

1. Place the unit's Power Switch in the OFF position and follow the proper Lockout/Tagout procedures.
2. Remove and retain the screws securing the Control Side Cover and remove the cover.
3. Mark and disconnect the affected Coupler line(s).
4. Remove and retain the two (2) small screws that attach each Coupler to the Mounting Plate.

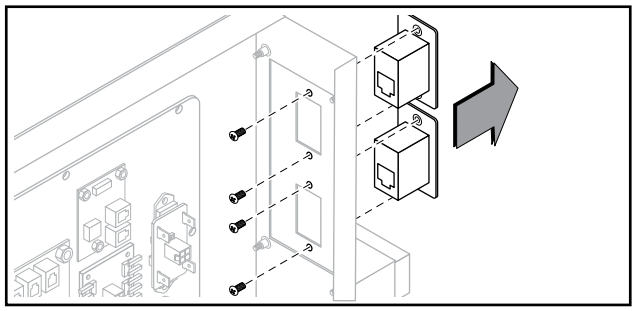

RESTORE:

5. Insert the replacement Coupler(s) and attach with its screws.
6. Reconnect the Coupler line(s).
7. Replace the Control Side Cover and secure with its screws.
8. Restore power to the unit and test for proper function.

CONTROL COMPARTMENT COMPONENTS – VISOR MODEL (ONLY)

NOTE: All previously listed control compartment components (Standalone and Kitchen Minder models) are NOT INSTALLED in the VISOR models of the IRHS.

NOTE: THE USE OF AN ESD WRIST STRAP IS STRONGLY RECOMMENDED. FOLLOW ESD PROCEDURES ON PAGE 11.

12V POWER CONTROL BOARD

If VISOR is installed in the unit, the 12V Power Control Board is located on the VISOR Control Panel inside the control compartment.

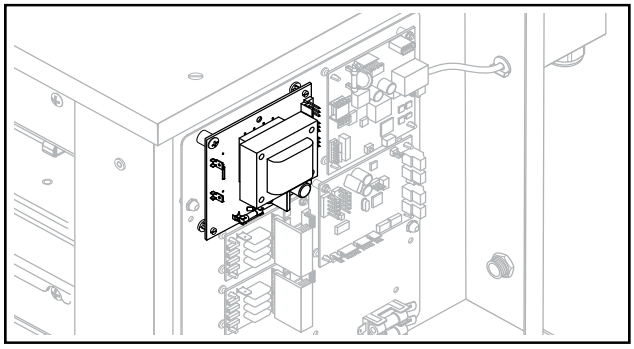

TOOLS REQUIRED: Phillips screwdriver; ESD strap; Needle-nose pliers

1. Place the unit's Power Switch in the OFF position and follow the proper Lockout/Tagout procedures.
2. Remove and retain the screws securing the Control Side Cover and remove the cover.
3. Mark and disconnect the spade and molex connectors that are connected to the 12V Power Control Board.
4. Remove and retain the two (2) screws securing the 12V Power Control Board to the unit.

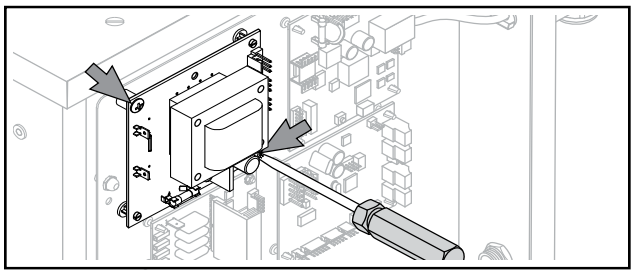

5. Leaving them in place, use the two (2) nylon PC lock-in supports to slide the 12V Power Control Board off of the control panel. If the PC lock-in supports are being reused on the replacement 12V Power Control Board, use needle-nose pliers to squeeze the PC lock-in supports and slide out of the 12V Power Control Board. The nylon screw stubs will remain in place.

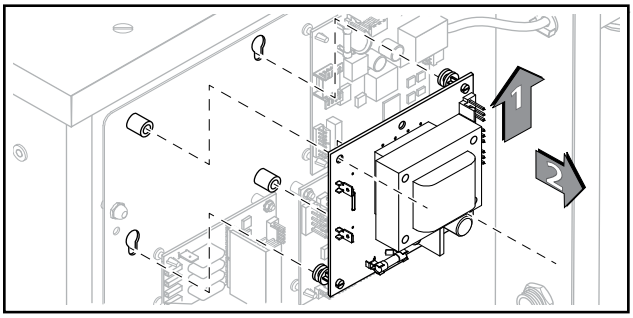

OR

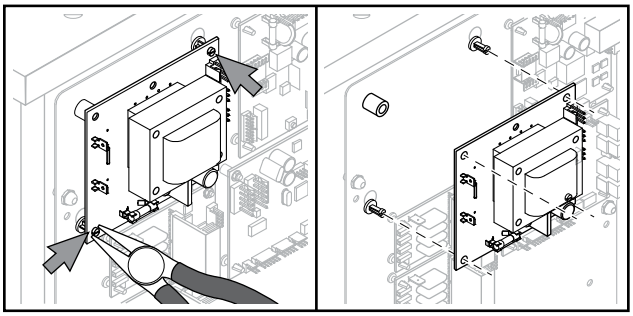

RESTORE:

6. If necessary, install two (2) nylon PC lock-in supports in the 12V Power Control Board.
7. Wearing the ESD Wrist Strap, and following ESD procedures, install the replacement 12V Power Control Board, with its PC lock-in supports, by sliding into the keyholes in the control panel and secure in place with its screws.
8. Reconnect the spade and molex connectors.
9. Replace the Control Side Cover and secure with its screws.
10. Restore power to the unit and test for proper function.

NOTE: THE USE OF AN ESD WRIST STRAP IS STRONGLY RECOMMENDED. FOLLOW ESD PROCEDURES ON PAGE 11.

POWER CONTROL BOARD – ACM

If VISOR is installed in the unit, the ACM Power Control Board is located on the VISOR Control Panel inside the control compartment.

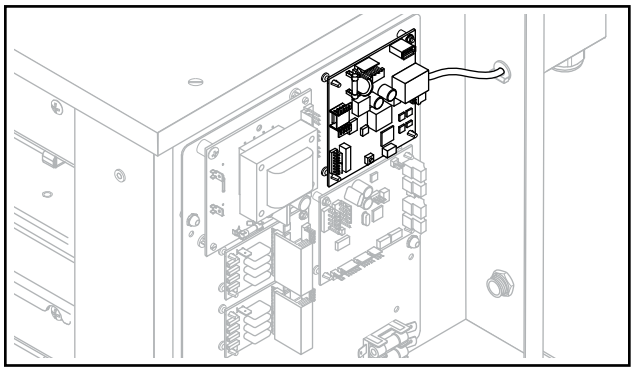

TOOLS REQUIRED: Phillips screwdriver; ESD strap; 1/4" nut driver or socket; Needle-nose pliers

1. Place the unit's Power Switch in the OFF position and follow the proper Lockout/Tagout procedures.
2. Remove and retain the screws securing the Control Side Cover and remove the cover.
3. Mark and disconnect the connectors and data line that are connected to the ACM Power Control Board.
4. Remove and retain the 1/4" nut securing the ACM Power Control Board to the unit.
5. Squeeze each of the three (3) nylon PC lock-in supports with needle-nose pliers to release the ACM Power Control Board off of the control panel. The nylon supports and nut stub will remain in place.

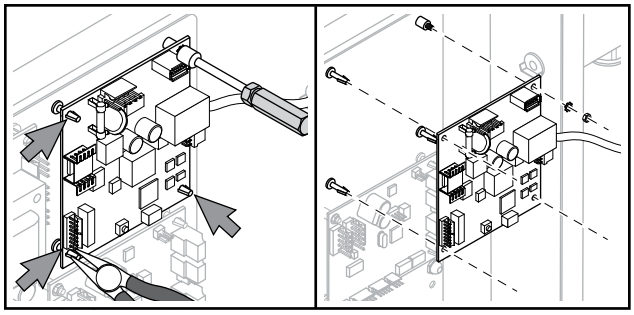

RESTORE:

6. Wearing the ESD Wrist Strap, and following ESD procedures, install the replacement ACM Power Control Board onto its nylon PC lock-in supports and secure in place with its nut.
7. Reconnect the spade and molex connectors.
8. Replace the Control Side Cover and secure with its screws.
9. Restore power to the unit and test for proper function.

NOTE: THE USE OF AN ESD WRIST STRAP IS STRONGLY RECOMMENDED. FOLLOW ESD PROCEDURES ON PAGE 11.

POWER CONTROL BOARD – 103M

If VISOR is installed in the unit, the ACM Power Control Board is located on the VISOR Control Panel inside the control compartment. The quantity varies depending on the specific model.

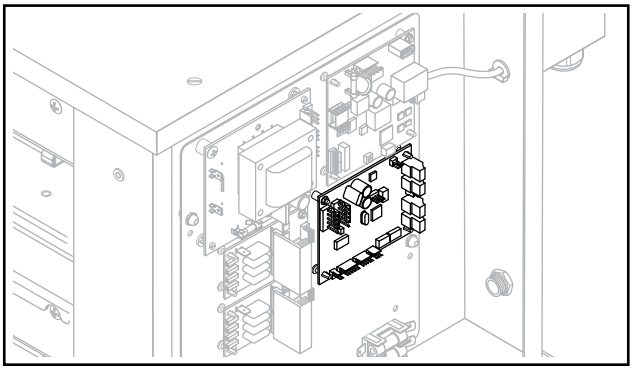

TOOLS REQUIRED: Phillips screwdriver; ESD strap; 1/4" nut driver or socket; Needle-nose pliers

1. Place the unit's Power Switch in the OFF position and follow the proper Lockout/Tagout procedures.
2. Remove and retain the screws securing the Control Side Cover and remove the cover.
3. Mark and disconnect the connectors that are connected to the 103M Power Control Board.

NOTE: The use of an ESD Wrist Strap is strongly recommended. Follow ESD procedures on page 11.

4. Remove and retain the 1/4" nut and its nylon spacer securing the 103M Power Control Board to the unit.
5. Squeeze each of the three (3) nylon PC lock-in supports with needle-nose pliers to release the 103M Power Control Board off of the control panel. The nylon supports and nut stub remain in place.

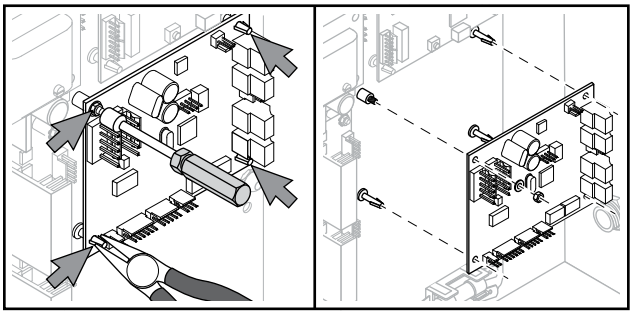

RESTORE:

6. Wearing the ESD Wrist Strap, and following ESD procedures, install the replacement 103M Power Control Board onto its nylon PC lock-in supports and secure in place with its nut and nylon spacer.
7. Reconnect the spade and molex connectors.
8. Replace the Control Side Cover and secure with its screws.
9. Restore power to the unit and test for proper function.

NOTE: THE USE OF AN ESD WRIST STRAP IS STRONGLY RECOMMENDED. FOLLOW ESD PROCEDURES ON PAGE 11.

POWER CONTROL BOARD – TRIAC DRIVE

If VISOR is installed in the unit, the Triac Drive Power Control Board is located on the VISOR Control Panel inside the control compartment. The quantity varies depending on the specific model.

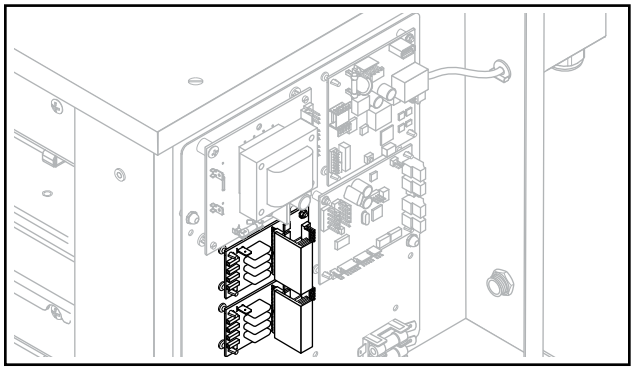

TOOLS REQUIRED: Phillips screwdriver; ESD strap; 1/4" nut driver or socket; Needle-nose pliers

1. Place the unit's Power Switch in the "OFF" position and follow the proper lockout/tagout procedures.
2. Remove and retain the screws securing the Control Side Cover and remove the cover.
3. Mark and disconnect the connectors that are connected to the Triac Drive Power Control Board.
4. Remove and retain the 1/4" nut and nylon spacer securing the Triac Drive Power Control Board to the unit.
5. Squeeze each of the three (3) nylon PC lock-in supports with needle-nose pliers to release the Triac Drive Power Control Board off of the control panel. The nylon supports and nut stub will remain in place.

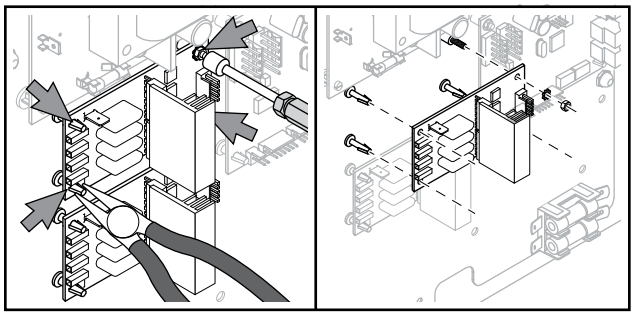

RESTORE:

6. Wearing the ESD Wrist Strap, and following ESD procedures, install the replacement Triac Drive Power Control Board onto its nylon PC lock-in supports and secure in place with its nut.
7. Reconnect the spade and molex connectors.
8. Replace the Control Side Cover and secure with its screws.
9. Restore power to the unit and test for proper function.

FUSE HOLDER AND FUSES

The Fuses and Fuse Holder serve as a circuit interrupter from the main power input. They are located on the VISOR Control Panel, inside the control compartment.

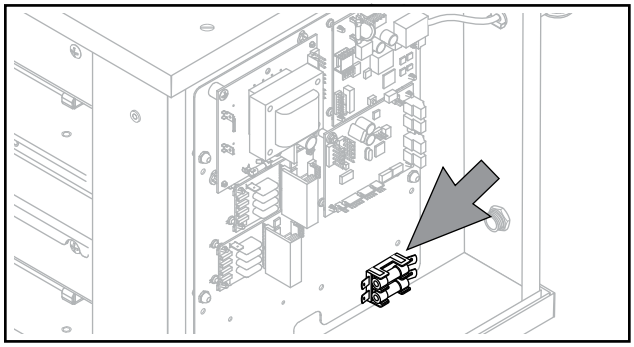

TOOLS REQUIRED: Phillips screwdriver

1. Place the unit's Power Switch in the OFF position and follow the proper Lockout/Tagout procedures.
2. Remove and retain the screws securing the Control Side Cover and remove the cover.

FOR FUSE HOLDER REPLACEMENT

3. Disconnect the spade connectors connected to the Fuse Holder.
4. Remove and retain the screws securing the Fuse Holder to the unit and remove the Fuse Holder.

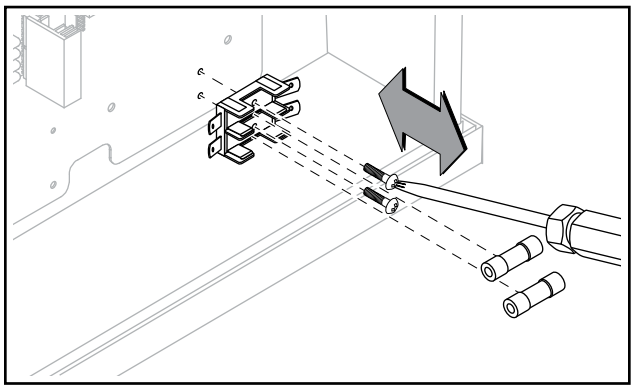

RESTORE:

5. Install the replacement Fuse Holder and secure with its screws.
6. Reconnect the spade connectors.
7. INSTALL CORRECTLY RATED FUSES ONLY!

NOTE: Replacing fuse(s) with an incorrect rating can cause nuisance blowing if rating is too low, or a loss of circuit protection if too high. Damage to the equipment and risk of fire may result.

8. Replace the Control Side Cover and secure with its screws.
9. Restore power to the unit and test for proper function.

FOR FUSE REPLACEMENT

3. Remove the fuses and test with an ohm meter.

RESTORE:

4. Replace the fuse(s) with correctly rated fuse(s):

Models 2x2, 2x3, 2x4, 4x2	12 Amp
Model 3x4	16 Amp

NOTE: Replacing fuse(s) with an incorrect rating can cause nuisance blowing if rating is too low, or a loss of circuit protection if too high. Damage to the equipment and risk of fire may result.

5. Replace the Control Side Cover and secure with its screws.
6. Restore power to the unit and test for proper function.

TROUBLESHOOTING & DIAGNOSTICS

IRHS TROUBLESHOOTING FLOW CHART

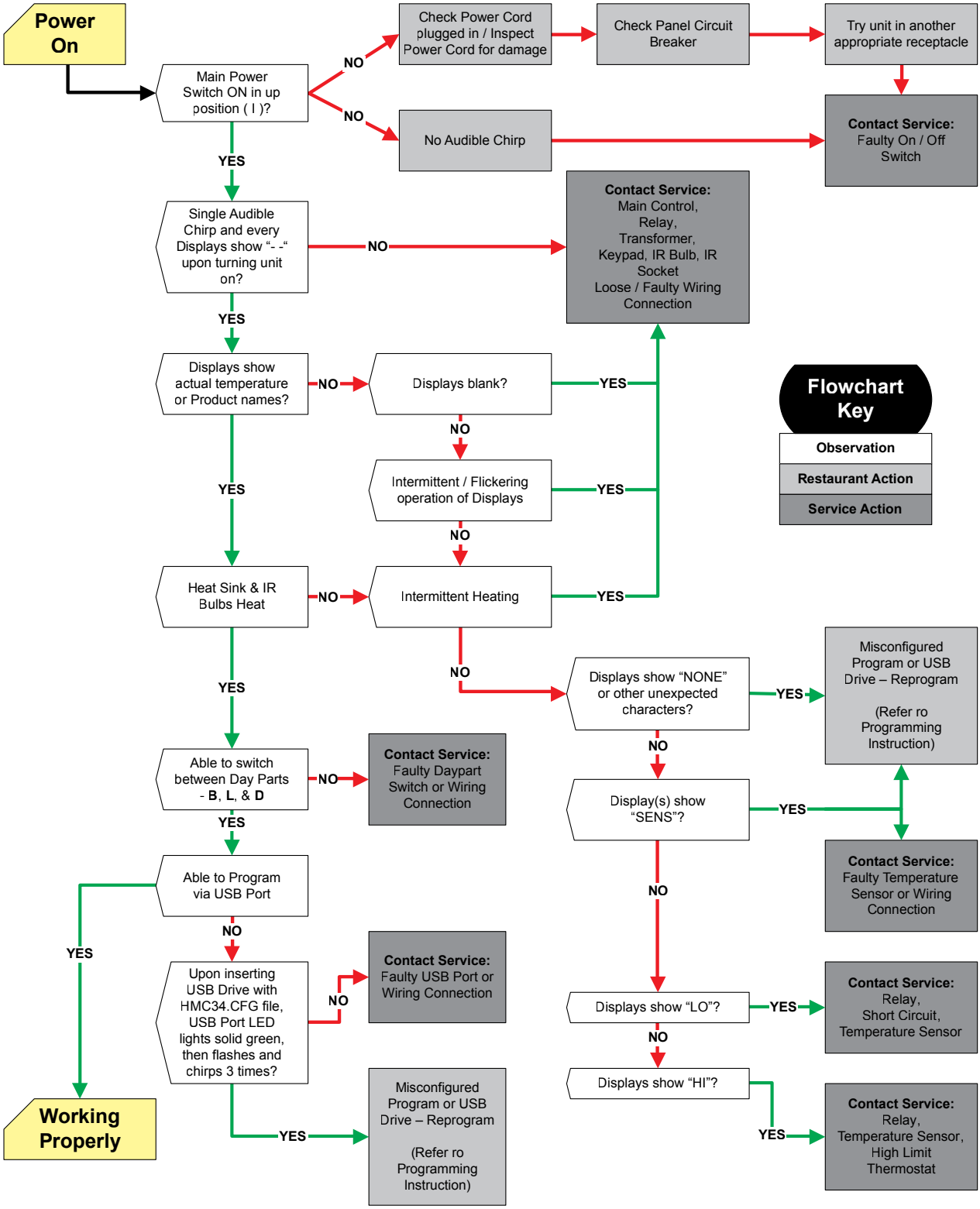

IRHS TROUBLESHOOTING GUIDE

COMPONENT CHECK	STATE		POSSIBLE CONDITIONS	SOLUTION(S)
Unit Powered?			Unplugged	Plug Power Cord into correct receptacle
			Power Cord damaged	Repair/Replace Power Cord
			Circuit Breaker tripped	Reset panel breaker
			Faulty receptacle	Replace receptacle
			Fuse	Replace Fuse
			Wiring/Connectors	Trace and repair wiring
			On/Off Switch	Replace On/Off Switch
Timer (Menu) Bar Displays	Blank?	Both Bars	Transformer	Replace Transformer
			Controller	Replace Controller
			Keypad Display	Replace Keypad Display
			Wiring/Connectors	Trace and repair wiring
		Rear Bar Only	Wiring/Connectors	Trace and repair wiring
			IR Relay	Replace faulty relay
		Individual Keypad	Wiring/Connectors	Trace and repair wiring
			Keypad Display	Replace Keypad Display
	Showing Error Code	“SENS” or “HIGH”	RTD	Replace RTD (Temperature) Sensor
			RTD Board	Replace RTD Board
			Programming	Reprogram the unit
		“LOW”	RTD	Replace RTD (Temperature) Sensor
			RTD Board	Replace RTD Board
			Programming	Reprogram the unit
			High Limit Switch	Allow unit to cool and switch reset
				Replace High Limit Swith
		“BULB”	Wiring/Connectors	Trace and repair wiring
			IR Relay	Replace faulty relay
			Emitter (IR Bulb)	Replace Emitter (IR Bulb)
			Emitter Socket	Replace Emitter (IR Bulb) Socket
HeatSink (Bottom) Heating?			Programming	Reprogram the unit
			Controller	Replace Controller
			Heat Relay	Replace faulty relay
			RTD	Replace RTD (Temperature) Sensor
			RTD Board	Replace RTD Board
			Heat Element	Replace Heat Element
			High Limit Switch	Allow unit to cool and switch reset
				Replace High Limit Swith
			Wiring/Connectors	Trace and repair wiring
Emitters (IR Bulbs)	Not Operating?		Programming	Reprogram the unit
			Controller	Replace Controller
			Emitter (IR Bulb)	Replace Emitter (IR Bulb)
	Operating?		Glass Assembly cleanliness	Clean Glass Assembly
				Check Glass Assembly for damage/defect
			Lid usage	Ensure proper lid for product is used
Programming			USB Drive	Ensure USB drive is blank and download recipes
				Replace USB drive
			Website Programming	Reprogram the unit
			USB Port	Replace USB Port
			Wiring/Connectors	Trace and repair wiring
			Controller	Replace Controller
Daypart Switch			Heat Relay	Replace faulty relay
			Controller	Replace Controller
			Daypart Switch	Replace Daypart Switch
Lids/Pans			Proper fit	Verify proper proper lid and pan installation
			Glass Assembly	Check Glass Assembly for damage/defect
				Ensure Glass Assembly is correctly installed
			Non-Duke parts	Verify OEM information (packaging/labeling)

IRHS COMPONENT TECHNICAL SPECIFICATIONS

PART NO.	DESCRIPTION	SPECIFICATIONS
166112	ACM, Power Control Board (VISOR-only)	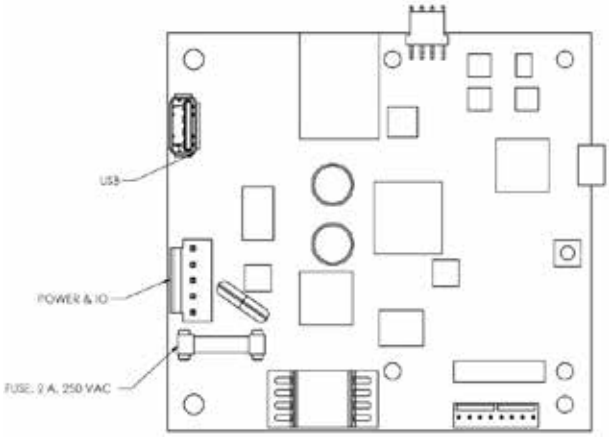
166080	**Controller**; Renau HMC-34	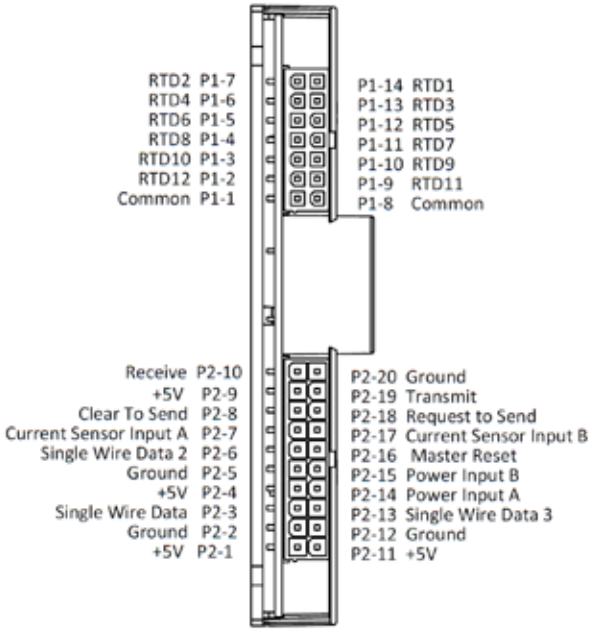
166017	**Emitter, IRHS**; 208 VAC	• 208 VAC; 340 (170 x 2) W (± 3%)
166018	**Emitter, IRHS**; 240 VAC	• 240 VAC; 340 (170 x 2) W (± 3%)
166004	**Heat Element**; 2-Wide, 208 VAC	• 208 VAC; 300 W
166005	**Heat Element**; 2-Wide, 240 VAC	• 240 VAC; 300 W
166007	**Heat Element**; 3-Wide, 208 VAC	• 208 VAC; 450 W
166008	**Heat Element**; 3-Wide, 240 VAC	• 240 VAC; 450 W
166009	**Heat Element**; 4-Wide, 208 VAC	• 208 VAC; 300 W
166010	**Heat Element**; 4-Wide, 240 VAC	• 240 VAC; 300 W

PART NO.	DESCRIPTION	SPECIFICATIONS
166082	**Keypad Display;** Up/Down *(all configurations)*	• Input: 5 VDC • Pins: — Pin #1: GND — Pin #2: 5 VDC — Pin #3: Data In — Pin #4: Data Out
166083	**Keypad Display**; Up/Up *(only with 3x4 configurations)*	
166111	Modular Jack (VISOR-only)	• 1.5 A; 125 VDC • Torque: 12 Kgf/cm • CAT 5 • IP67
120011	Power Control Board (VISOR-only)	• Primary 208/230 VAC; Secondary: 12 VAC 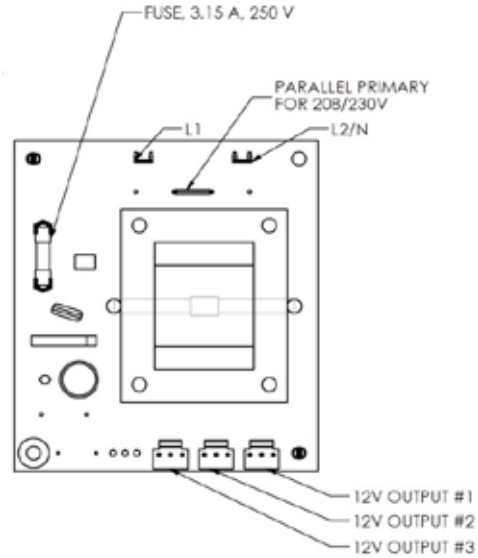
157830	Relay, Smart Power Module	• Max. Load Current: 20 Arms. Heat sinking required. • Operating Voltage: 24-250 Vrms • Input : 5V TTL 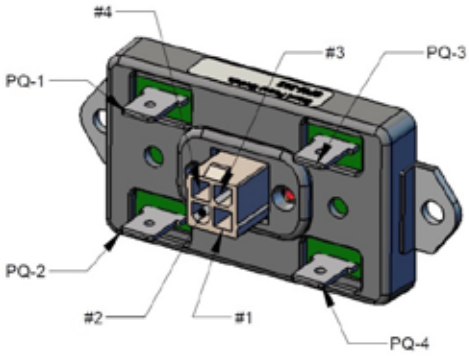 Connector PIN Data PQ-1 LOAD1-1 PQ-2 LOAD1-2 PQ-3 LOAD2-1 PQ-4 LOAD2-2 #1 +5V DC #2 GND #3 1-wire network IN #4 1-wire network OUT

PART NO.	DESCRIPTION	SPECIFICATIONS
158279	RTD Sensor	• Temperature Range: -65°F to 260°F
158312	Thermostat, High Limit	• Opens @ 300°F; Closes @ 270°F
155749	**Transformer;** 208/240 VAC	• Primary: 208/240 VAC; Secondary: 12 VAC 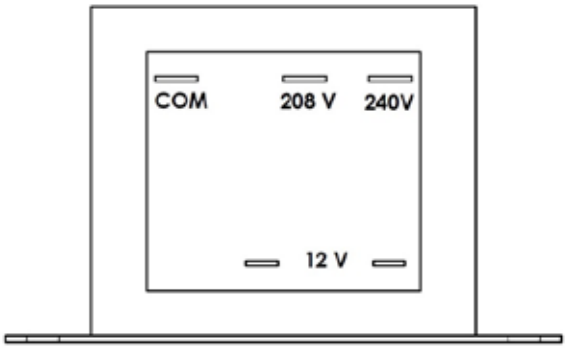
156838	**Transformer;** 230 VAC	• Input: 230 VAC; 50/60 Hz; Output: 12.6 V @ 2.38 A 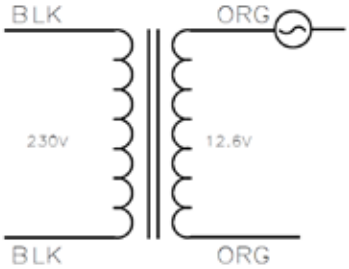

OPERATIONS

OPERATING PROCEDURES

- Ensure proper pan covers are inserted into the correct location for broiled products.
- Upon turning ON, allow the unit to heat until the menu bars display the pre-programmed product names. This does not occur before reaching proper temperature.

NOTE: If the menu bars display temperature at any time after the preheat period, discontinue use of the affected pan location(s) until the unit can be serviced.

OPERATIONS

Menu Bar Components

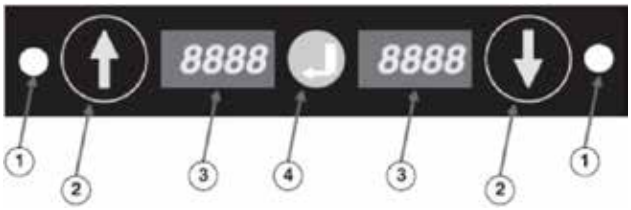

1. **Status LEDs**. Used for indicating status of pan.
   a. GREEN: Menu is Active – product in pan (use first)
   b. FLASHING GREEN: Cook Warning Time reached (cook more product) or keypad in edit (programming) mode
   c. NON-ILLUMINATED: Menu is inactive – no product in pan
2. **Arrow Buttons:**
   a. Used for starting/stopping/resetting the menu.
   b. Used to access Menu Mode.
   c. Indicate which pan the adjacent status LED and pan display are linked to.
3. **LED Displays:**
   a. Displays product name and hold time remaining (alternates between the two when the Menu is active).
   b. Once to temperature, product names can be viewed on the displays. Additional settings such as “LINK”, “TIME”, and “TEMP” can be viewed two different ways:
      1) Manually accessing Menu Mode through Menu Bars.
      2) Uploading unit settings from the IRHS to a USB Drive and viewing via the Internet. This is accomplished by using the same website used to download recipes.
4. **ENTER Button**. Used to access Menu Mode.

Changing Dayparts

There are two methods for selecting Dayparts:

1. Select the appropriate Daypart Button to switch between breakfast, lunch, and dinner menus. If necessary, the three (3) parts can be programmed for any three separate time periods – not just "breakfast", "lunch", and/or "dinner" menus.

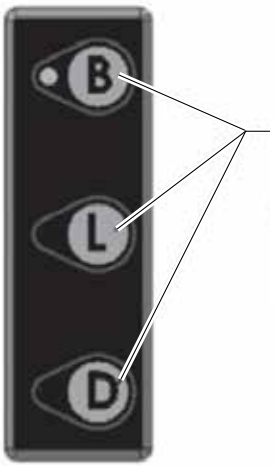

PUSH BUTTONS TO CHANGE DAYPART MENU – CORRESPONDING LED WILL TURN ON (BREAKFAST SHOWN)

2. Via Menu Bar:

a. Enter Menu Mode by pressing and holding the ENTER button "↵" for three (3) seconds.

b. Status LED flashes, "**MENU**" is displayed on left Display, and either "**UP**" or "**DOWN**" is displayed on the right display – indicating which pan location information will be displayed/controlled.

c. After selecting the UP or DOWN Arrow, press the ENTER Button "↵" to accept.

d. Status LED stops flashing and "**MEAL ↵ SET1**" appears on the Display.

e. Press the ENTER button again. Status LED flashes indicating Menu Mode.

f. Use the arrow buttons to scroll to desired Daypart ("**MEAL ↵ SET1**", "**MEAL ↵ SET2**", or "**MEAL ↵ SET3**") and press the ENTER button to accept.

g. Status LED stops flashing, "**UPDATING**" is displayed for a few seconds, and then the desired Daypart ("**MEAL ↵ SETx**") is displayed.

h. Press the UP arrow button one last time to scroll to "**EXIT**" and press the ENTER button "↵" to exit Menu Mode.

Display Link, Hold Time, or Temperature

1. Enter Menu Mode by pressing and holding the ENTER button "↵" for three (3) seconds.

2. Status LED flashes, "**MENU**" is displayed on left Display, and either "**UP**" or "**DOWN**" is displayed on the right display – indicating which pan location information will be displayed/controlled.

3. After selecting the UP or DOWN arrow, press the ENTER Button "↵" to accept.

4. Status LED stops flashing and "**MEAL ↵ SET1**" appears on the Display.

5. Press the ENTER button "↵" again. Status LED flashes indicating edit mode.

6. Press the UP arrow button repeatedly to scroll up or down through "**LINK**", "**TIME**", and "**TEMP**". The DOWN arrow button can be used to cycle the opposite direction.

This indicates product named **BURG** is linked pan locations

This indicates the hold time for BURG

This indicates the Heat Sink Temperature for BURG

7. Press the UP arrow button one last time to scroll to "**EXIT**" and press the ENTER button "↵" to exit Menu Mode.

DIAGNOSTICS

Checking Heat Sink Temperature

- A surface temperature probe can be used to check the temperature of the heat sink surface.
- No pans should be in wells during the pre-heat and temperature check period. Pre-heat the holding unit for 30 minutes before taking any temperature readings.
- Ensure the pan location being measured is not in a hold cycle mode (timing down).
- Locate the surface temperature probe in the geometric center of the desired pan location. Make sure the probe is making good contact with the surface while taking readings.
- The temperature control will exhibit a swing in temperature as the control cycles on and off while regulating to the set point temperature. The average of several readings taken should be +/- 5°F from the set point.
- Compare the measured temperature to the programmed heat sink set point (TEMP) for the specified pan location.

Checking IR Bulb Function

- IR bulbs are either ON or OFF.
- Select an arrow to initiate a hold cycle.
- After heat up is complete (display will show product names), visually confirm the IR bulb comes on.

Checking Product Settings (via USB file)

1. Turn the IRHS on and wait for temperature or product names to display.
2. Insert a **blank** USB drive (any size) into the USB port. The USB port LED will light solid green and a single chirp should be heard.
3. The display will go blank and the USB port LED will begin flashing green.
4. A second chirp should be heard, then the USB port LED will return to solid green indicating that the file has successfully uploaded from the IRHS to the USB drive.
5. Remove the USB drive from the port.
6. To view the settings file on the Internet, log onto the same website used to download recipes:

   www.dukemfg.info/bkirhs

   User Name: "**manager**"

   Password: "**password**" (case sensitive)

Error Codes

The RTD Board performs a routine, internal check after turning the unit on to validate the unit is sensing temperature and heating properly. In the event of a problem, an error will display on the Menu Bar:

"BULB" – IR Bulb Circuit Fault

Indicates a fault with a specified IR Bulb circuit. The affected pan location is not available for timing product and a qualified service technician should be contacted to identify the cause of the fault.

"LOW" – Under-Temperature Fault

Indicates a fault with a heating circuit component. The display will show "**LOW**" if the temperature stays 10°F below the set point temperature for 30 minutes. The affected pan location is not available for timing product and a qualified service technician should be contacted to identify the cause of the fault.

"HIGH" – Over-Temperature Fault

Indicates a fault with a heating circuit component. The display will show "**HIGH**" if the temperature stays 10°F above the set point temperature for 30 minutes. The affected pan location is not available for timing product and a qualified service technician should be contacted to identify the cause of the fault.

"SENS" – Sensor Fault

May indicate the unit has been programmed improperly (i.e., loading a 2x4 product configuration file into a 2x2 unit). An attempt to properly reprogram the unit should be made.

May indicate a fault with a heat sink temperature sensor. The affected pan location is not available for timing product and a qualified service technician should be contacted to identify the cause of the fault.

Temperature Check Procedure

1. **No pans should be in wells during the pre-heat and temperature check.** Pre-heat the warmer for 30 minutes before taking any temperature readings. Do not take readings unless the cavity has been empty for 30 minutes. This will allow the temperature to stabilize and will prevent false readings.
2. A digital temperature meter that has been calibrated must be used to get an accurate temperature reading. Use a thermocouple surface temperature probe to measure temperatures.
3. The heating well should be cleaned and empty before the temperature is checked. Avoid any air drafts that might flow through the cavity.
4. Locate the surface temperature probe on the bottom of the first cavity as shown for the cabinet size.
5. All temperature controls exhibit a swing in temperature as the control cycles on and off while regulating to the set point. The correct calibration temperature is the average of several readings taken over a period of 20 minutes after the warmer has been pre-heated. The average temperature should be ± 5°F from the set point.

CLEANING & ROUTINE MAINTENANCE

CLEANING

IF DAILY CLEANING IS PERFORMED ROUTINELY, DEEPER, MORE AGGRESSIVE, CLEANING METHODS CAN BE AVOIDED. OVER LONGER PERIODS OF TIME, FRIED FOOD PRODUCTS CAN ACCUMULATE AND BAKE ON SURFACES OF THE COMPARTMENTS.

Cleaning solutions need to be alkaline based or non-chloride cleaners. Any cleaner containing chlorides will damage the protective film of the stainless steel. Chlorides are also commonly found in hard water, salts and household and industrial cleaners. If cleaners containing chlorides are used, be sure to rinse repeatedly and dry thoroughly upon completion.

WARNING: NEVER USE AN ACID BASED CLEANING SOLUTION!

MANY FOOD PRODUCTS HAVE AN ACIDIC CONTENT WHICH CAN DETERIORATE THE FINISH. BE SURE TO CLEAN ALL FOOD PRODUCTS FROM ANY STAINLESS STEEL SURFACE. COMMON ITEMS INCLUDE, TOMATOES, PEPPERS AND OTHER VEGETABLES.

Routine cleaning of stainless steel can be done with soap and water. Extreme stains or grease should be cleaned with a non-abrasive cleaner and plastic scrub pad. It is always good to rub with the grain of the steel.

Early signs of stainless steel breakdown can consist of small pits and cracks. If this has begun, clean thoroughly and start to apply stainless steel cleaners in attempt to restore and preserve the finish of the steel's protective layer.

RECOMMENDED SUPPLIES

- Cleaning Towels
- Non-Scratch Scrub Pad
- SYR Cleaning Brush Tool
- Kay Super Concentrate Degreaser
- Kay-5® Sanitizer/Cleaner, or compatible sanitizer

DAILY INSPECTION CHECKLIST

Inspect glass daily for chips, cracks, or breaking. Discard all food and notify manager if any chips, cracks, or broken glass are found. Do not use equipment. All glass must be in good condition before using equipment to hold food.

- Make sure the unit is free of any grease or visible food soils.
- Make sure the exterior of the unit is free of smudges or soil.
- Make sure the unit holding pans are free of damage and any food soil residue.

DAILY CLEANING PROCEDURES

Never use a high-pressure water wash for this cleaning procedure as water can damage electrical components.

1. Turn unit off, unplug, and allow to cool for at least 10 minutes.
2. Remove all holding pans and covers. Wash, rinse, and sanitize at the 3-compartment sink.
3. Allow to air dry.
4. Fully clean all the heat sink surfaces. Spray the cleaning brush tool with degreaser and use as shown – gently sliding in and out of each compartment.

   NOTE: NEVER USE STEEL PADS, WIRE BRUSHES, OR SCRAPERS!

5. Fully clean upper glass surfaces by hand. Spray a cleaning towel, or non-scratch scrub pad when necessary, with soapy solution degreaser.

   NOTE: Never spray cleaning solution directly onto the cabinet.

6. Use sanitizer-soaked towels to wipe out all interior compartments on the unit. Wipe the top compartments first, then the remaining levels from top to bottom.

   IMPORTANT: Use clean, sanitizer-soaked towels (towels must be wrung out so that they are damp and not dripping, dripping towels may harm the unit)

WEBSITE PROGRAMMING

1.

Log on.

www.dukemfg.info/bkirhs

User Name: **manager**

Password: **password**

(case sensitive)

2.

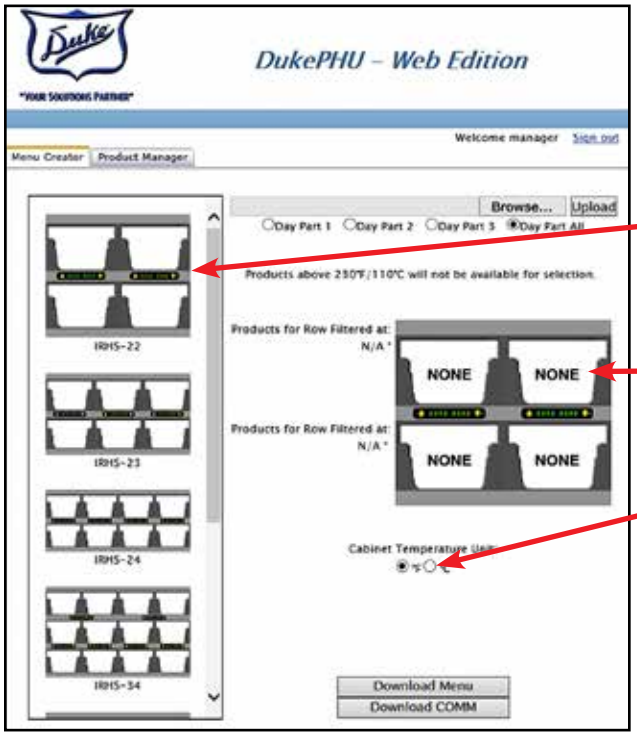

NOTE: When you first log onto this page, you must:

1) Select the desired equipment configuration on the left, before it will…
2) …show up on the right side in order to be programmed.
3) If necessary, change the Cabinet Temperature Unit to "°C" (Celsius)

3.

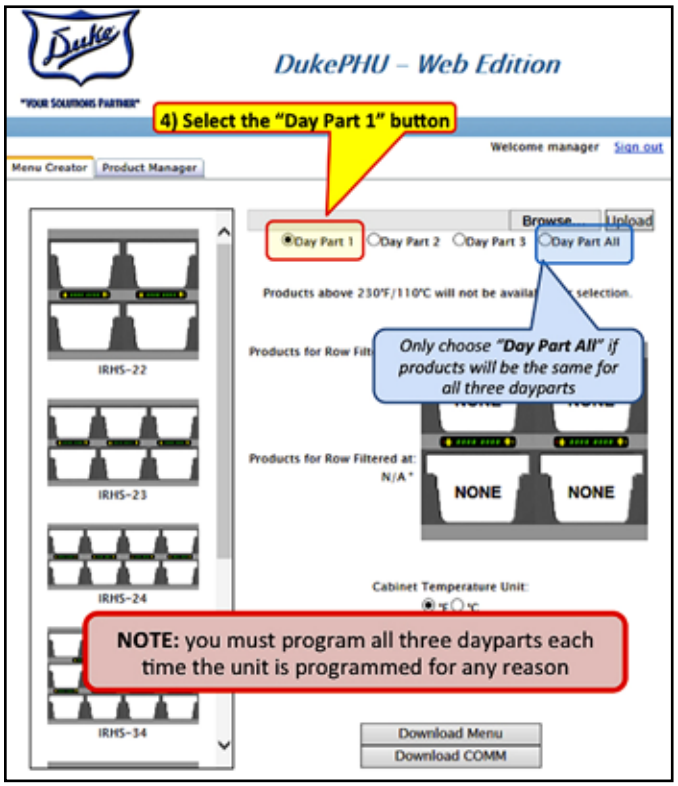
DukePHU – Web Edition
"YOUR SOLUTIONS PARTNER"
4) Select the "Day Part 1" button
Welcome manager Sign out
Menu Creator
Product Manager
Browse...
Upload
Day Part 1
Day Part 2
Day Part 3
Day Part All
Products above 230°F/110°C will not be available for selection.
Only choose "Day Part All" if products will be the same for all three dayparts
Products for Row Filtered at:
N/A °
NONE
NONE
Cabinet Temperature Unit:
IRHS-22
IRHS-23
IRHS-24
IRHS-34
NOTE: you must program all three dayparts each time the unit is programmed for any reason
Download Menu
Download COMM

4.

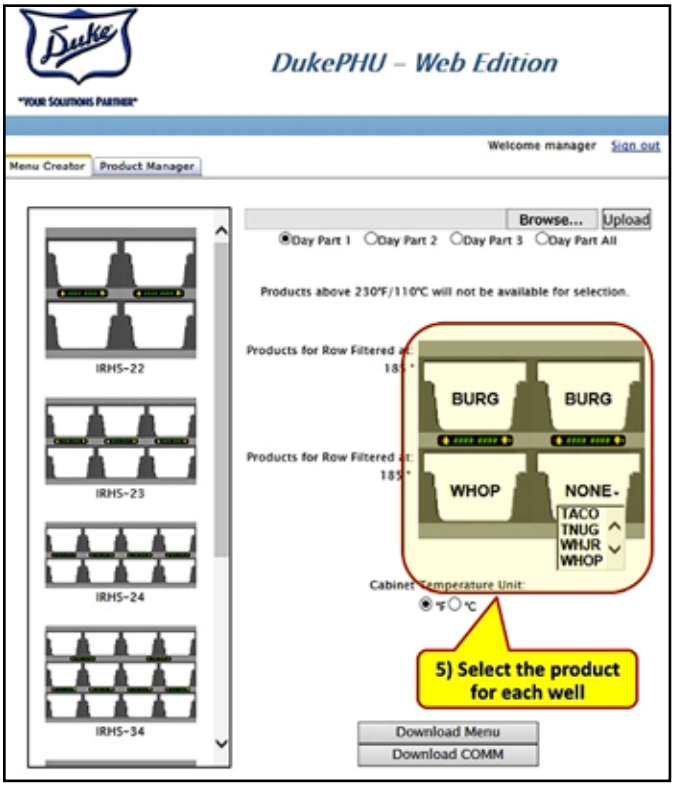
DukePHU – Web Edition
"YOUR SOLUTIONS PARTNER"
Welcome manager Sign out
Menu Creator
Product Manager
Browse...
Upload
Day Part 1
Day Part 2
Day Part 3
Day Part All
Products above 230°F/110°C will not be available for selection.
Products for Row Filtered at:
BURG
BURG
WHOP
NONE
TACO
TNUG
WHJR
WHOP
Cabinet Temperature Unit:
IRHS-22
IRHS-23
IRHS-24
IRHS-34
5) Select the product for each well
Download Menu
Download COMM

5.

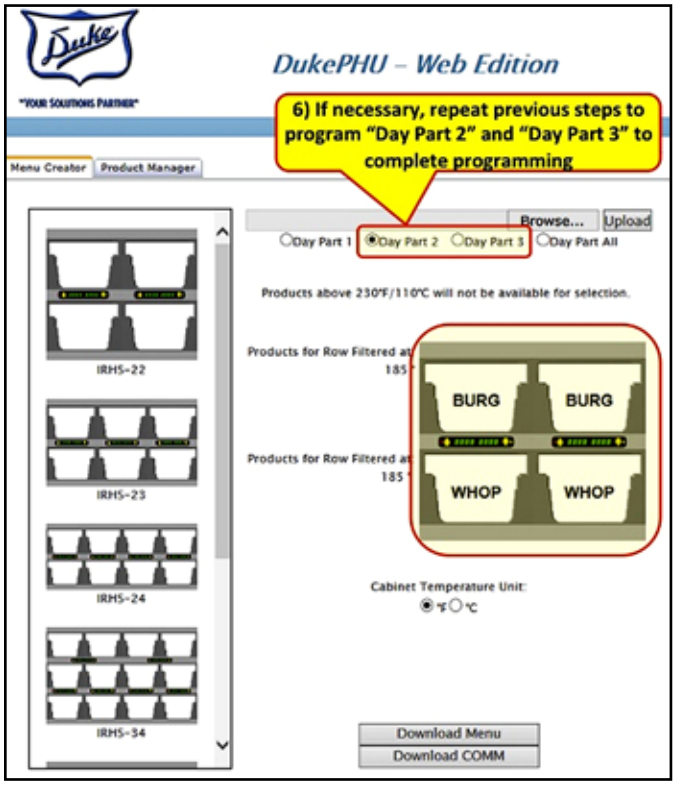
DukePHU – Web Edition
"YOUR SOLUTIONS PARTNER"
6) If necessary, repeat previous steps to program "Day Part 2" and "Day Part 3" to complete programming
Menu Creator
Product Manager
Browse...
Upload
Day Part 1
Day Part 2
Day Part 3
Day Part All
Products above 230°F/110°C will not be available for selection.
Products for Row Filtered at:
185 °
BURG
BURG
WHOP
WHOP
Cabinet Temperature Unit:
IRHS-22
IRHS-23
IRHS-24
IRHS-34
Download Menu
Download COMM

6.

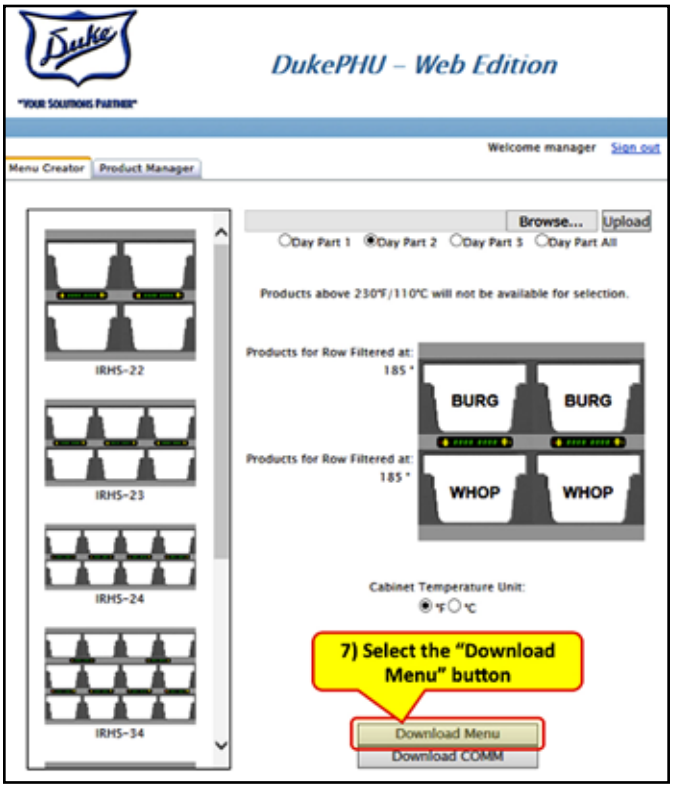
DukePHU – Web Edition
"YOUR SOLUTIONS PARTNER"
Welcome manager Sign out
Menu Creator
Product Manager
Browse...
Upload
Day Part 1
Day Part 2
Day Part 3
Day Part All
Products above 230°F/110°C will not be available for selection.
Products for Row Filtered at:
185 °
BURG
BURG
WHOP
WHOP
Cabinet Temperature Unit:
IRHS-22
IRHS-23
IRHS-24
IRHS-34
7) Select the "Download Menu" button
Download Menu
Download COMM

7.

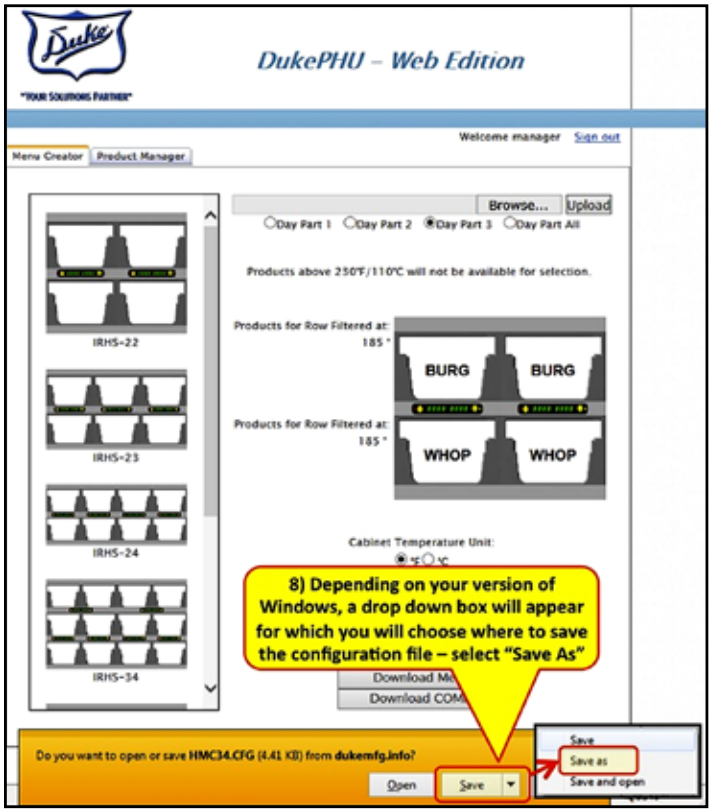
DukePHU – Web Edition
Welcome manager Sign out
Menu Creator
Product Manager
Browse...
Upload
Day Part 1
Day Part 2
Day Part 3
Day Part All
Products above 250°F/110°C will not be available for selection.
Products for Row Filtered at: 185°
BURG
BURG
Products for Row Filtered at: 185°
WHOP
WHOP
IRHS-22
IRHS-23
IRHS-24
IRHS-34
Cabinet Temperature Unit:
8) Depending on your version of Windows, a drop down box will appear for which you will choose where to save the configuration file – select "Save As"
Do you want to open or save HMC34.CFG (4.41 KB) from dukemfg.info?
Open
Save
Save
Save as
Save and open

8.

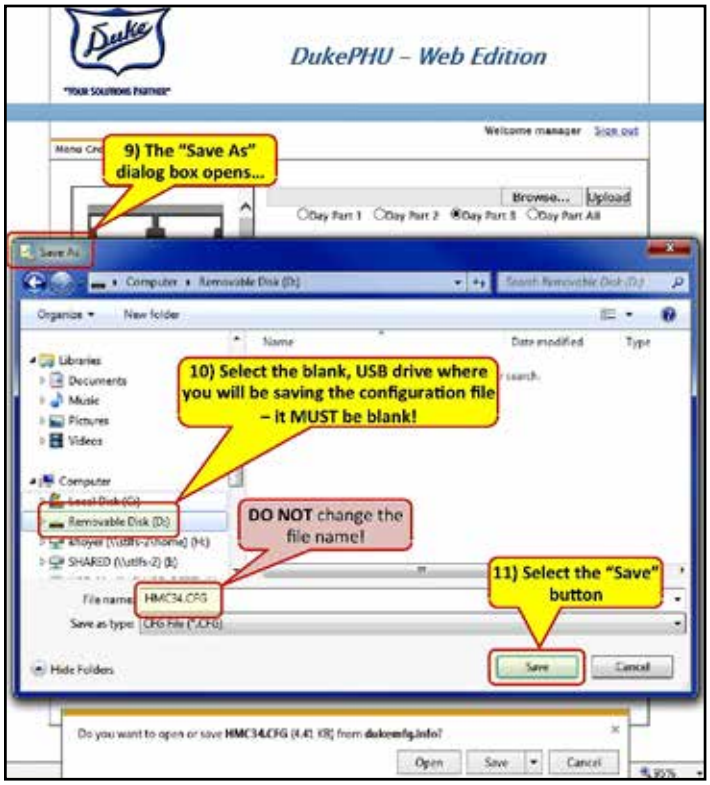
DukePHU – Web Edition
Welcome manager Sign out
9) The "Save As" dialog box opens...
Browse...
Upload
Day Part 1
Day Part 2
Day Part 3
Day Part All
Save As
Computer
Removable Disk (D:)
Organize
New folder
Name
Date modified
Type
Libraries
Documents
Music
Pictures
Videos
Computer
Local Disk (C:)
Removable Disk (D:)
10) Select the blank, USB drive where you will be saving the configuration file – it MUST be blank!
DO NOT change the file name!
File name: HMC34.CFG
Save as type: CFG File (*.CFG)
11) Select the "Save" button
Save
Cancel
Hide Folders
Do you want to open or save HMC34.CFG (4.41 KB) from dukemfg.info?
Open
Save
Cancel

Unit Programming Instructions

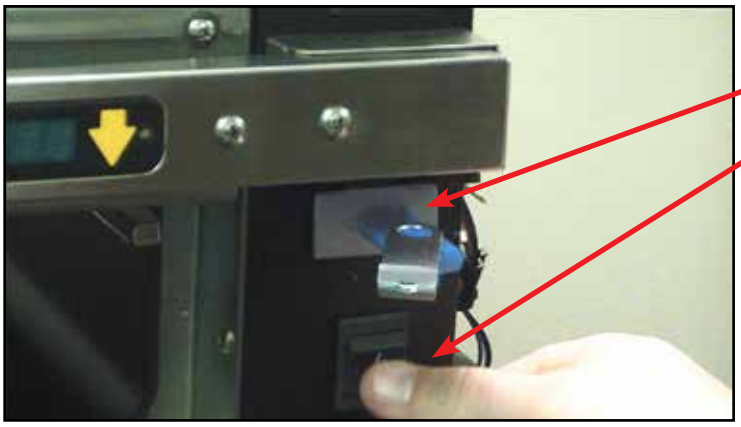

1) Power off the unit.
2) Insert the flash drive into the USB slot.
3) Power on the unit.
4) The program will automatically be installed. *The unit will chirp a few times, the Emitters will cycle, and the display shows different displays while programming is in progress*
5) Programming is complete when Menu Bar indicates the updated products and/or temperatures in all displays.

Product Manager Tab

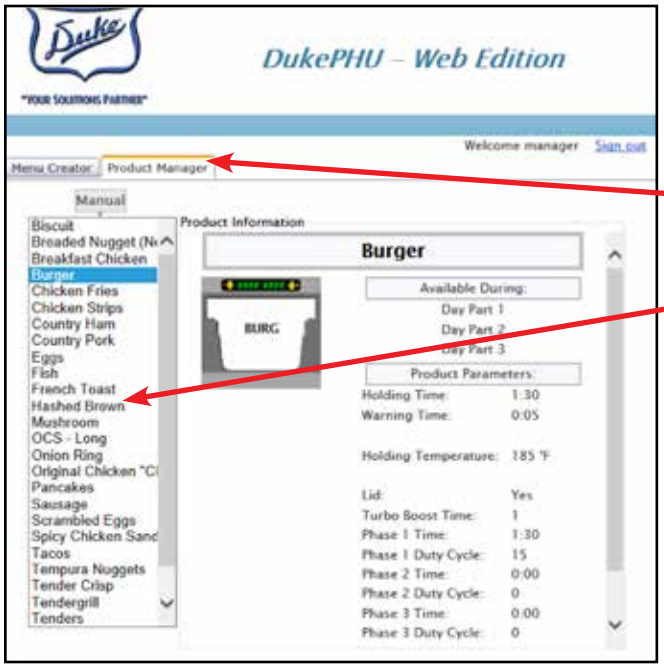

Select this tab…

…and then a product on the left side of the screen to view hold settings for various products.

IRHS DECK WIRING

2 WIDE, LEFT SIDE CONTROL

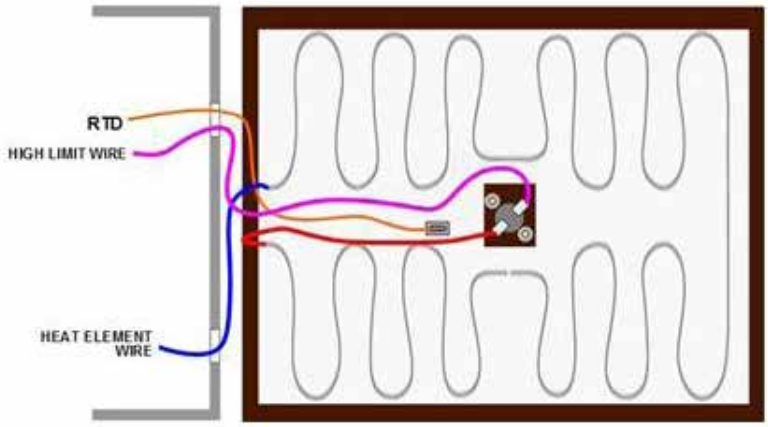

3 WIDE, RIGHT SIDE CONTROL

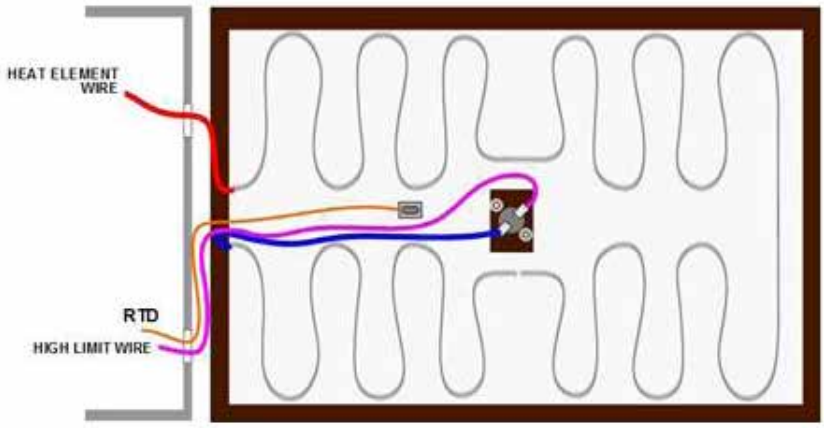

4 WIDE, RIGHT SIDE CONTROL

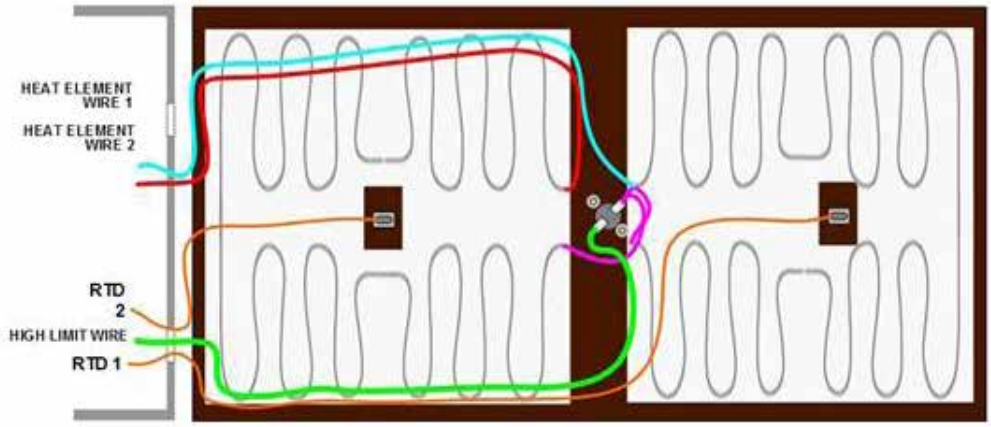

IRHS22 WIRING DIAGRAM

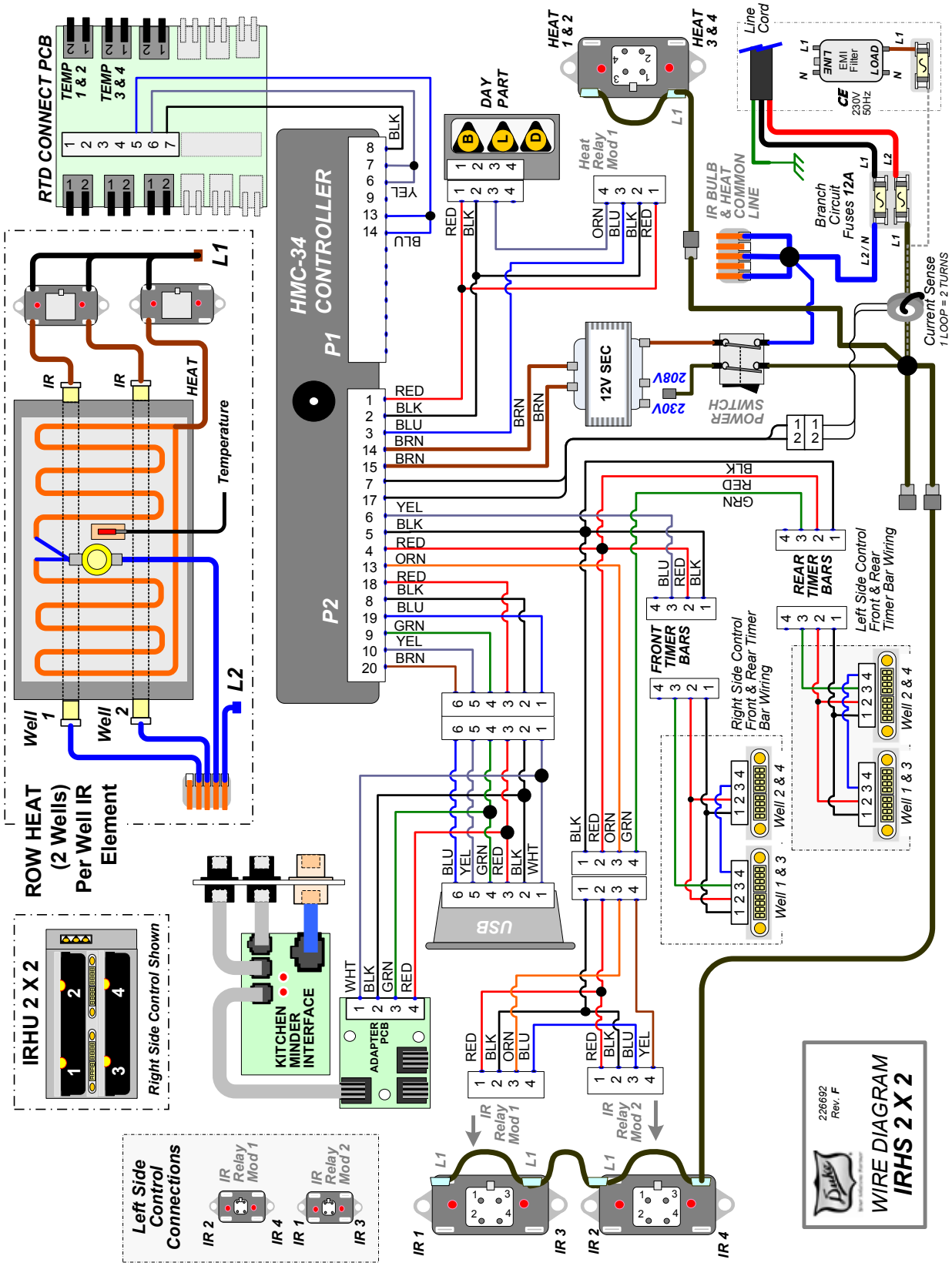

IRHS23 WIRING DIAGRAM

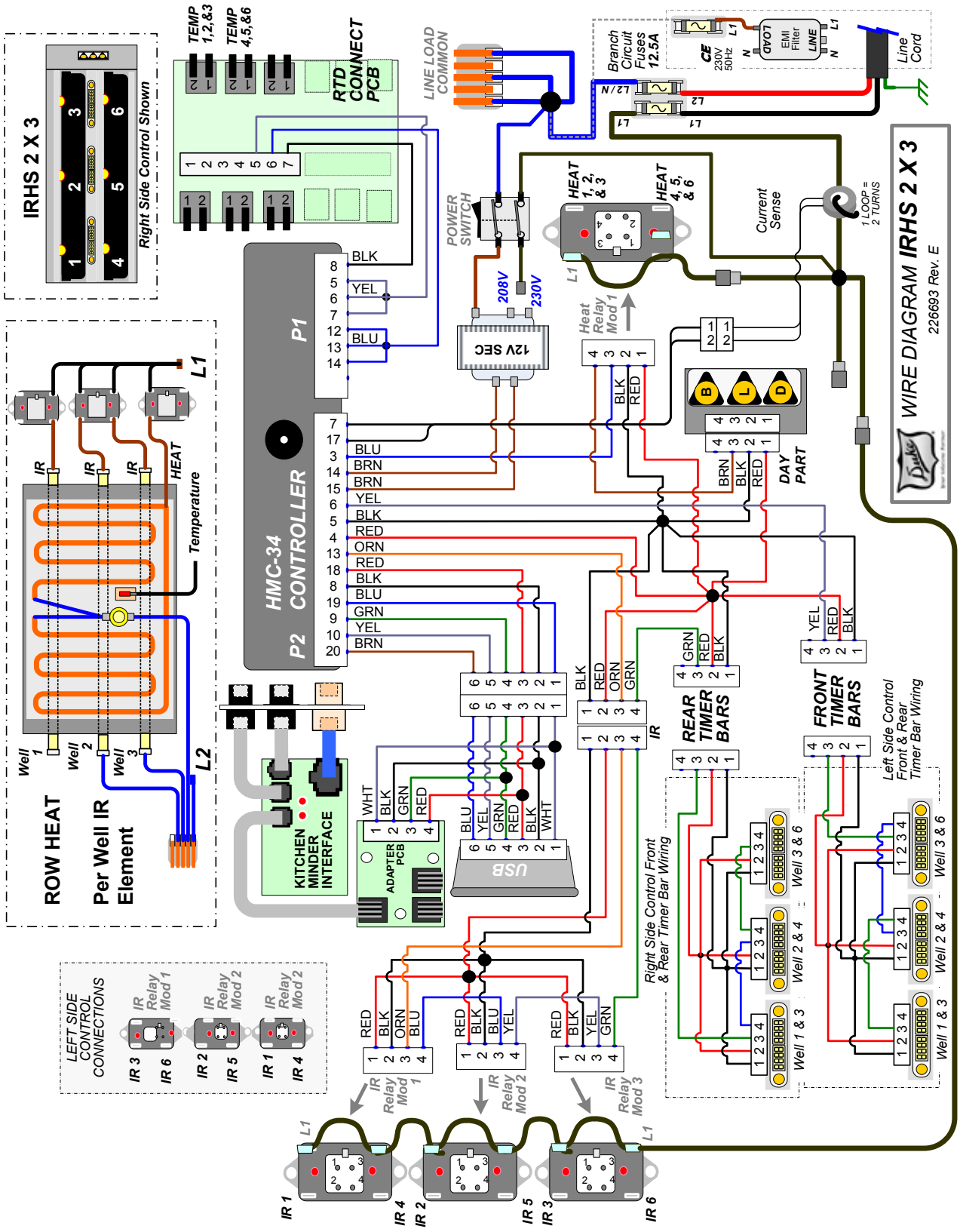

IRHS24 WIRING DIAGRAM

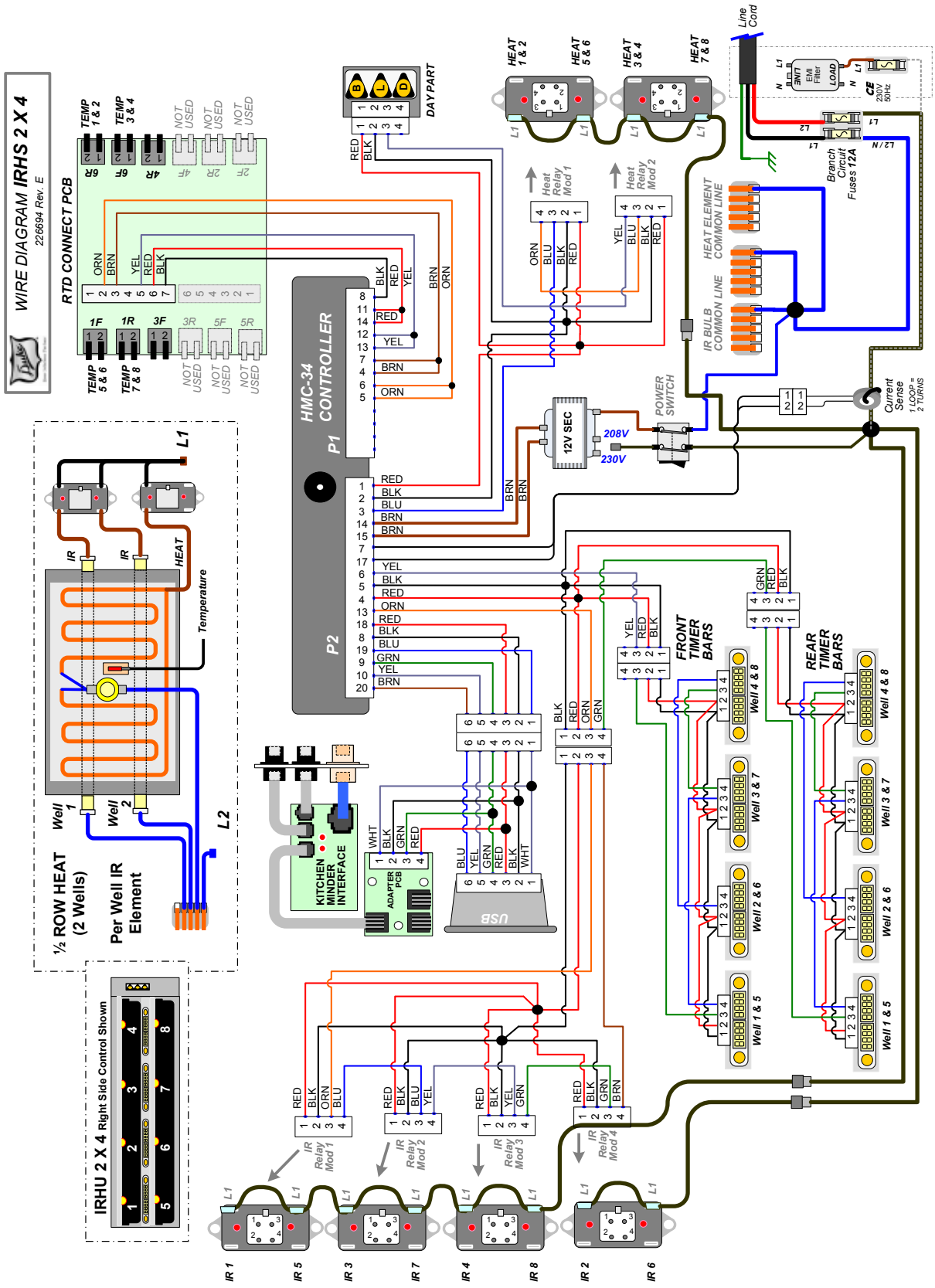

IRHS34 WIRING DIAGRAM

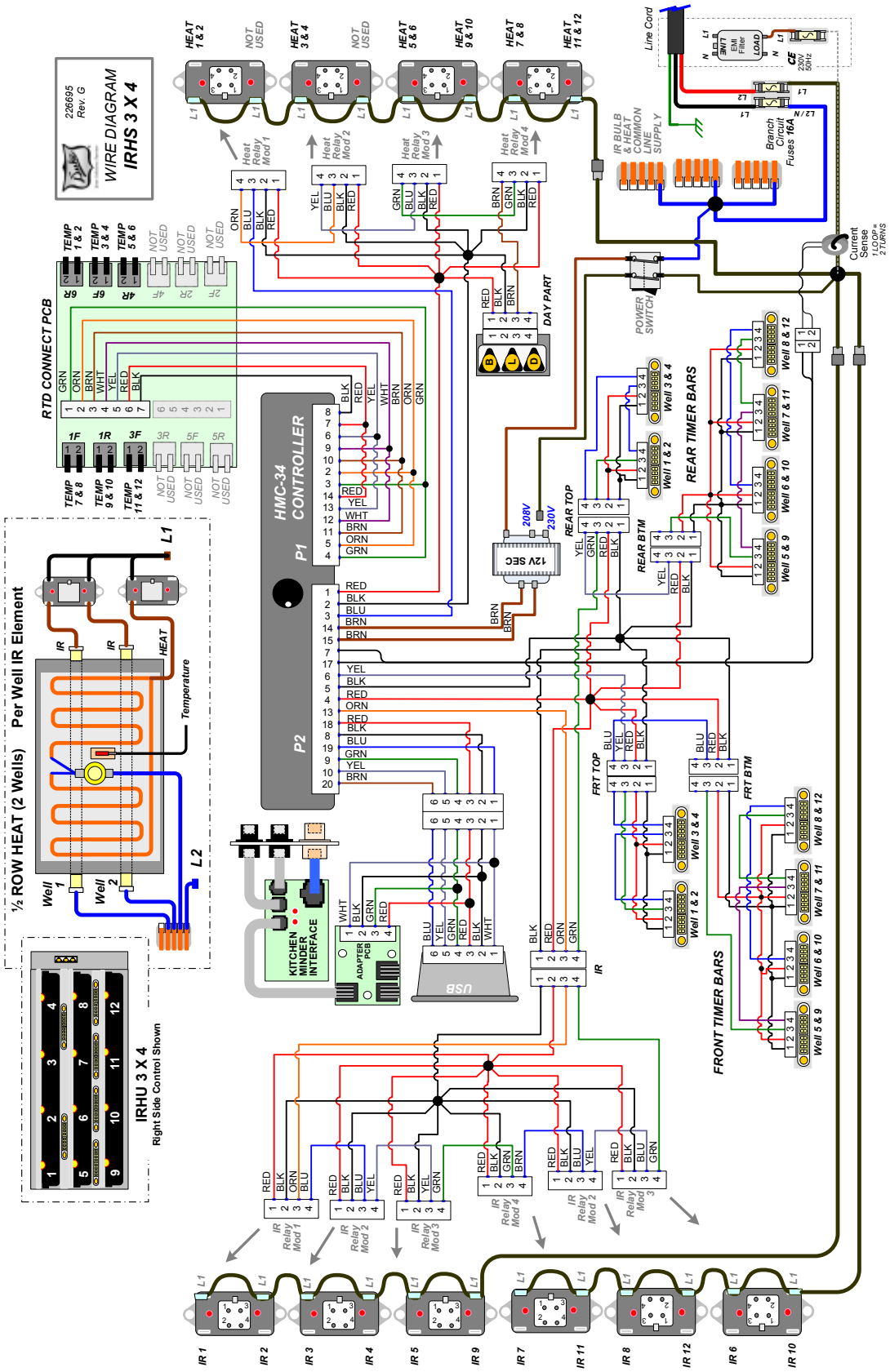

IRHS42 WIRING DIAGRAM

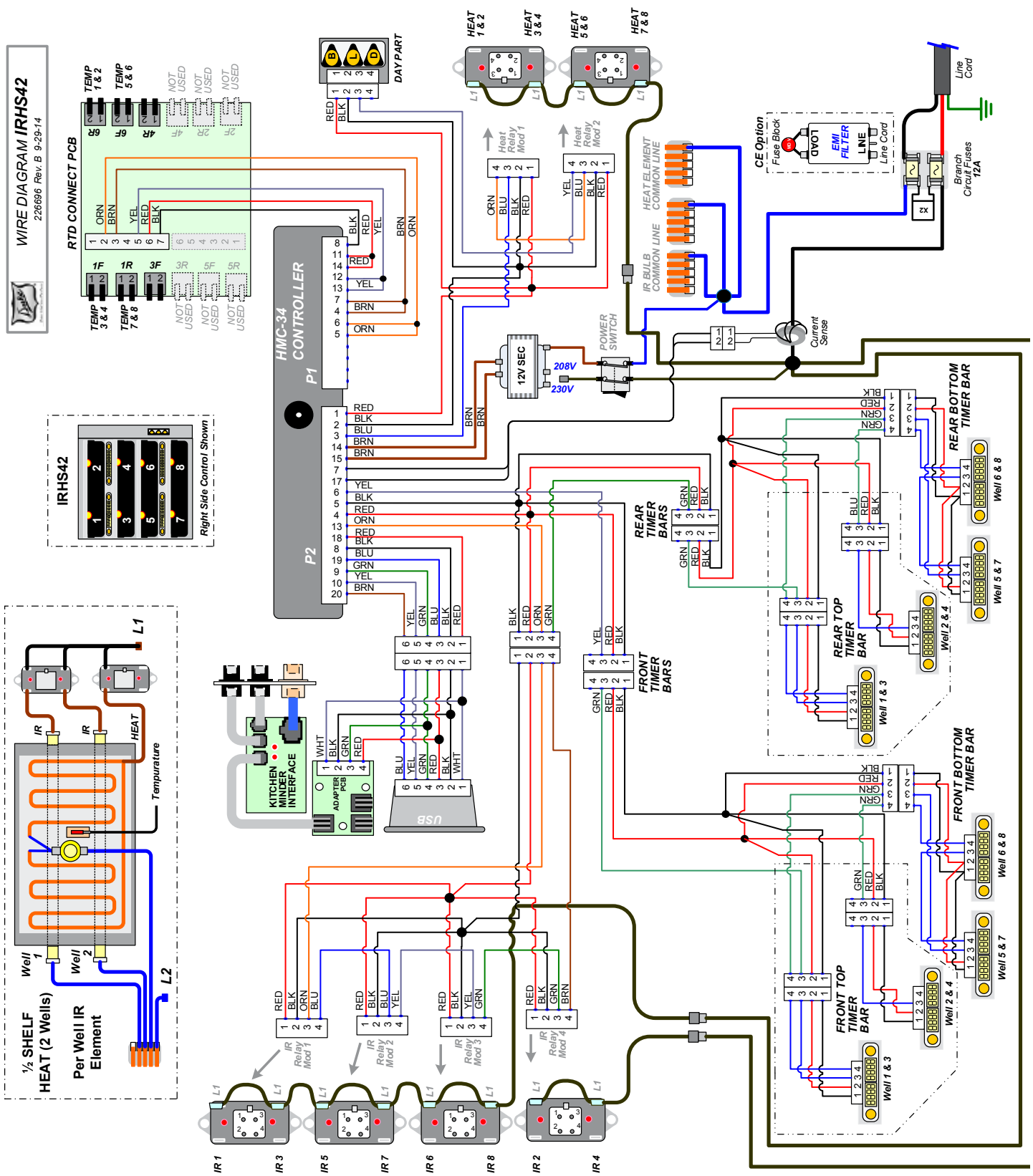

VISOR INTERFACE CABLE WIRING DIAGRAM

Heat & IR Load Connections

2 x 2	Heat	IR Bulb	Temp.
Well 1	B-1	A-1	AB-1
Well 2		A-2	
Well 3	B-3	A-3	AB-3
Well 4		A-4	
4 x 2	Heat	IR Bulb	Temp.
Well 1	B-1	A-1	AB-1
Well 2		A-2	
Well 3	B-3	A-3	AB-3
Well 4		A-4	
Well 5	D-1	C-1	CD-1
Well 6		C-2	
Well 7	D-3	C-3	CD-3
Well 8		C-4	
2 x 3	Heat	IR Bulb	Temp.
Well 1	B-1	A-1	AB-1
Well 2		A-2	
Well 3		A-3	
Well 4		A-4	
Well 5	B-3	B-2	AB-3
Well 6		B-4	
2 x 4	Heat	IR Bulb	Temp.
Well 1	B-1	A-1	AB-1
Well 2		A-2	
Well 3	B-3	A-3	AB-3
Well 4		A-4	
Well 5	D-1	C-1	CD-1
Well 6		C-2	
Well 7	D-3	C-3	CD-3
Well 8		C-4	
3 x 4	Heat	IR Bulb	Temp.
Well 1	B-1	A-1	AB-1
Well 2		A-2	
Well 3	B-3	A-3	AB-3
Well 4		A-4	
Well 5	D-1	C-1	CD-1
Well 6		C-2	
Well 7	D-3	C-3	CD-3
Well 8		C-4	
Well 9	F-1	E-1	EF-1
Well 10		E-2	
Well 11	F-3	E-3	EF-3
Well 12		E-4	

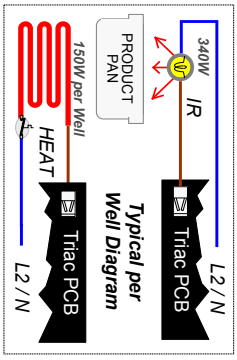

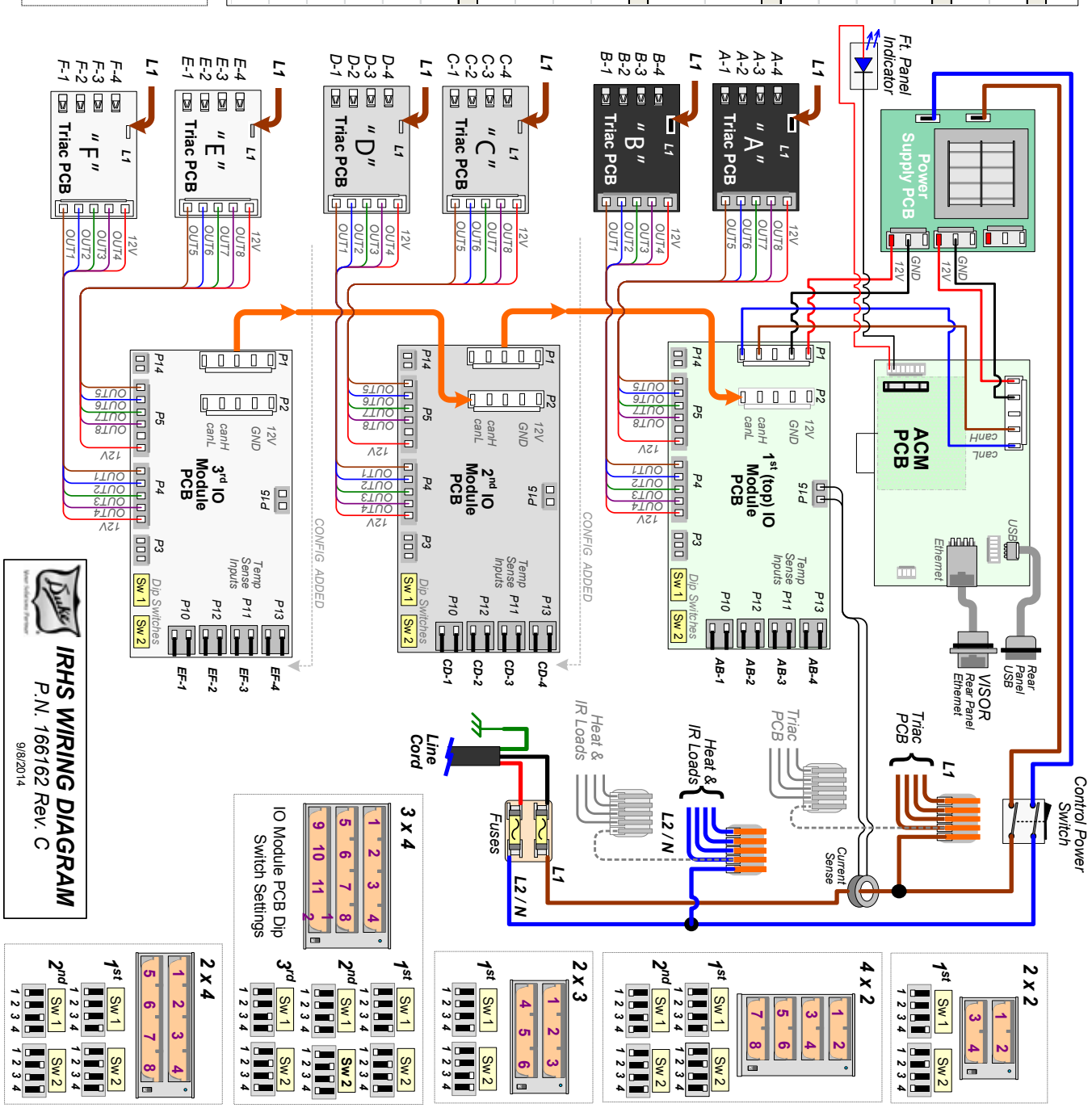

KITCHEN MINDER CONNECTIONS
(OPTIONAL UPGRADE; NOT AVAILABLE ON STANDALONE UNIT)

MASTER	SATELLITE 1	SATELLITE 2
IRHS22 (2X2)	2X2. 2X3, 2X4, 4X2	2X2. 2X3, 2X4, 4X2
IRHS23 (2X3)	2X2. 2X3, 2X4, 4X2	2X2. 2X3, 2X4, 4X2
IRHS24 (2X4)	2X2. 2X3, 2X4, 4X2	2X2. 2X3, 2X4, 4X2
IRHS34 (3X4)	NOT AVAILABLE	2X2. 2X3, 2X4
IRHS42 (4X2)	2X2. 2X3, 2X4, 4X2	2X2. 2X3, 2X4, 4X2

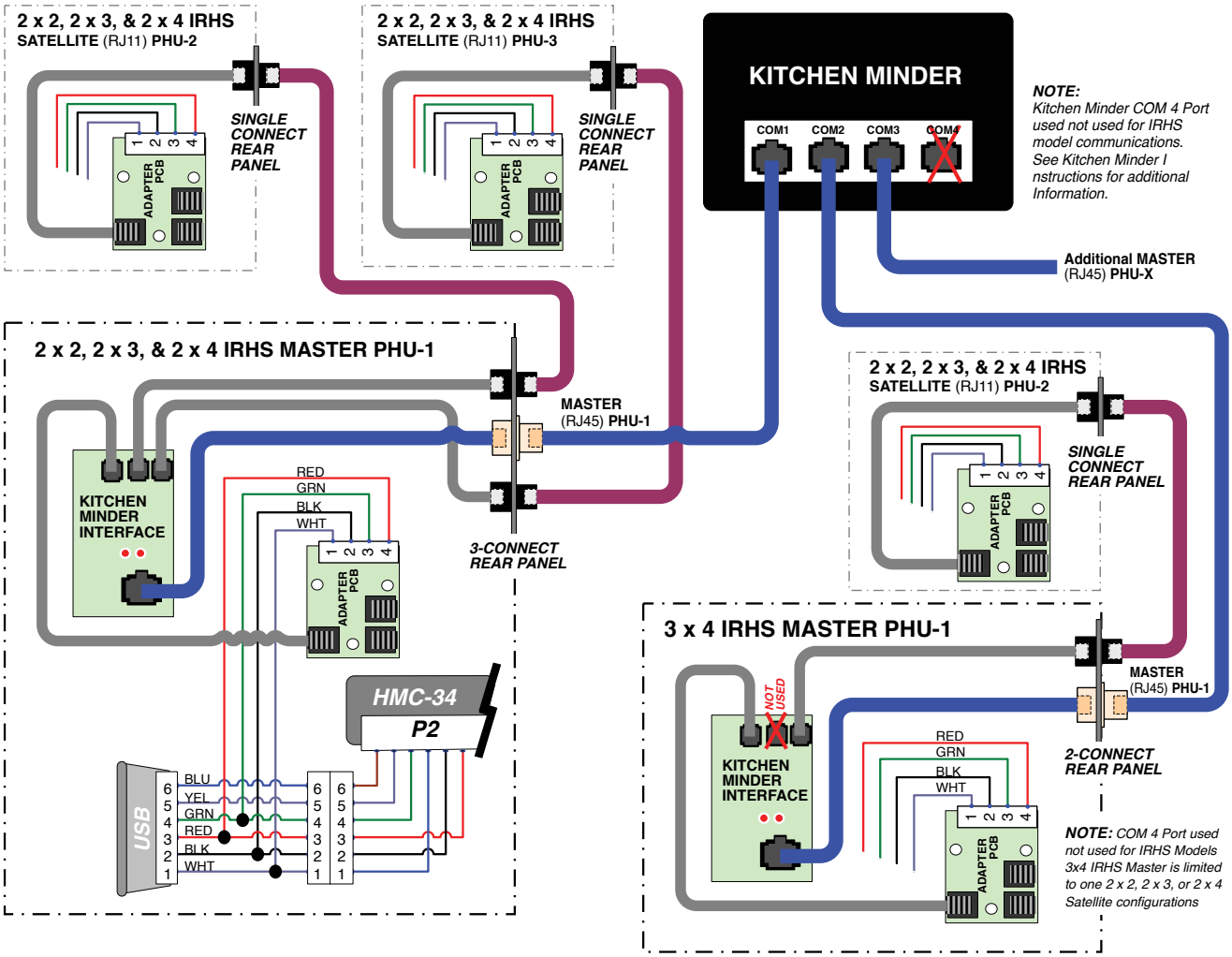

NOTES

CUSTOMER ASSISTANCE

To aid in reporting this unit in case of loss or theft, please record below the model number and serial number located on the unit. We also suggest you record all the information listed and retain for future reference.

MODEL NUMBER:	**SERIAL NUMBER:**
DATE OF PURCHASE:	
DEALER:	**TELEPHONE:**
SERVICER:	**TELEPHONE:**

FOR WARRANTY, PARTS & SERVICE:

DUKE CORPORATE,
CANADA, LATIN AMERICA

2305 N. Broadway
St. Louis, MO 63102
Phone: 314-231-1130
Toll Free: 800-735-3853
Fax: 314-231-2460
service-dispatch@dukemfg.com

DUKE ASIA PACIFIC

Duke Manufacturing
No.3 Building
Lane 28, Yu Lv Road
Malu Town, Jiading District
Shanghai 201801, China
Phone: +86 21 59153525 / 59153526
Fax: +86 21 33600628
service.asiapac@dukemfg.com

DUKE EMEA - EUROPE,
MIDDLE EAST, AFRICA, RUSSIA

Duke Manufacturing CR, s.r.o.
Na Dlouhem 86
Jazlovice, Ricany
Building number DC 4 on the
ProLogis Park Prague D1 West
Prague 251 01
Czech Republic
Phone: +420 323 608 193
Fax: +420 323 608 144
service.emea@dukemfg.com

DUKE EMEA – UK, IRELAND

Phone: +44 (0) 1395 234140
Fax: +44 (0) 1395 234154
service.emea@dukemfg.com

TO ACCESS INTERNET: www.dukemfg.com

Please provide the following information when you write or call: model number, serial number, date of purchase, your complete mailing address (including zip code), and description of the problem.

Duke®

Your Solutions Partner