INTERNET ARCHIVE

archive.org

DECLARATION OF MINA CHING

1. I am a Records Request Processor at the Internet Archive. I make this declaration of my own personal knowledge.

2. The Internet Archive is a website that provides access to a digital library of Internet sites and other cultural artifacts in digital form. Like a paper library, we provide free access to researchers, historians, scholars, and the general public. The Internet Archive has partnered with and receives support from various institutions, including the Library of Congress.

3. The Internet Archive has created a service known as the Wayback Machine. The Wayback Machine makes it possible to browse more than 450 billion pages stored in the Internet Archive's web archive. Visitors to the Wayback Machine can search archives by URL (i.e., a website address). If archived records for a URL are available, the visitor will be presented with a display of available dates. The visitor may select one of those dates, and begin browsing an archived version of the Web. Links on archived files in the Wayback Machine point to other archived files (whether HTML pages or other file types), if any are found for the URL indicated by a given link. For instance, the Wayback Machine is designed such that when a visitor clicks on a hyperlink on an archived page that points to another URL, the visitor will be served the archived file found for the hyperlink's URL with the closest available date to the initial file containing the hyperlink.

4. The archived data made viewable and browseable by the Wayback Machine is obtained by use of web archiving software that automatically stores copies of files available via the Internet, each file preserved as it existed at a particular point in time.

5. The Internet Archive assigns a URL on its site to the archived files in the format http://web.archive.org/web/[Year in yyyy][Month in mm][Day in dd][Time code in hh:mm:ss]/[Archived URL] aka an "extended URL". Thus, the extended URL http://web.archive.org/web/19970126045828/http://www.archive.org/ would be the URL for the record of the Internet Archive home page HTML file (http://www.archive.org/) archived on January 26, 1997 at 4:58 a.m. and 28 seconds (1997/01/26 at 04:58:28). The date indicated by an extended URL applies to a preserved instance of a file for a given URL, but not necessarily to any other files linked therein. Thus, in the case of a page constituted by a primary HTML file and other separate files (e.g., files with images, audio, multimedia, design elements, or other embedded content) linked within that primary HTML file, the primary HTML file and the other files will each have their own respective extended URLs and may not have been archived on the same dates.

INTERNET ARCHIVE

archive.org

6. Attached hereto as Exhibit A are true and accurate copies of browser screenshots of the Internet Archive's records of the archived files for the URLs and the dates specified in the attached coversheet of each screenshot.

7. Attached hereto as Exhibit B are true and accurate copies of the Internet Archive's records of the archived files for the URLs and the dates specified in the attached coversheet of each file.

8. I declare under penalty of perjury under the laws of the United States of America that the foregoing is true and correct.

DATE: February 10, 2026

Mina Ching

EXHIBIT A

https://web.archive.org/web/20120502214303/http://www.mercoproducts.com/

INTERNET ARCHIVE WayBackMachine
http://www.mercoproducts.com/ Go
128 captures
21 Feb 2010 – 7 Dec 202
DEC MAY JUN
02
2011 2012 2013
About this capture

Merco

Manitowoc About Us Contact Us

SEARCH

Products | Service | Sales | Energy | Events | News

Dealer Locator

Service Locator

INTERNET ARCHIVE WEB

ABOUT BLOG EVENTS
PROJECTS HELP DONATE
CONTACT JOBS VOLUNTEER

DONATE

INTERNET ARCHIVE WayBackMachine

http://www.

The Wayback
Click here to s
http://www.m

The Wayback Machine is an initiative of the Internet Archive, a 501(c)(3) non-profit, building a digital library of Internet sites and other cultural artifacts in digital form.
Other projects include Open Library & archive-it.org.

Your use of the Wayback Machine is subject to the Internet Archive's Terms of Use.

INTERNET ARCHIVE WEB

ABOUT BLOG EVENTS
PROJECTS HELP DONATE
CONTACT JOBS VOLUNTEER

DONATE

INTERNET ARCHIVE WayBackMachine

http://www.mer

The Wayback Mach
Click here to search
http://www.mercop

The Wayback Machine is an initiative of the Internet Archive, a 501(c)(3) non-profit, building a digital library of Internet sites and other cultural artifacts in digital form.
Other projects include Open Library & archive-it.org.

Your use of the Wayback Machine is subject to the Internet Archive's Terms of Use.

Having trouble using this? Go here: Sales - Service

News

Tweets

INTERNET ARCHIVE WEB

ABOUT BLOG EVENTS
PROJECTS HELP DONATE
CONTACT JOBS VOLUNTEER

DONATE

INTERNET ARCHI WayBackMachi

http://www

The Waybacl
Click here to
http://www.

The Wayback Machine is an initiative of the Internet Archive, a 501(c)(3) non-profit, building a digital library of Internet sites and other cultural artifacts in digital form.
Other projects include Open Library & archive-it.org.

Your use of the Wayback Machine is subject to the Internet Archive's Terms of Use.

 Copyright 2011 Manitowoc Foodservice. All Rights Reserved

https://web.archive.org/web/20120503002740mp_/http://www.mercoproducts.com/products/hold-merchandise/warmers/counter-top/modular-holding-cabinets

INTERNET ARCHIVE WayBackMachine
http://www.mercoproducts.com/products/hold-merchandise/warmers/counter-top/modular-holding-cabinets Go
6 captures
3 May 2012 - 8 Mar 2016
APR MAY AUG
2011 03 2012 2016
About this capture

Modular Holding Cabinets

Keep Food Hot, Fresh, and Ready for Easy Assembly!

Modular Holding Cabinets allow increased flexibility in holding operations for greater menu variety. Single and four bin models available for all your holding needs. Each bin is sealed to prevent moisture loss and is independently controlled with easy-to-operate digital controls and temperature display. Merco MHC's utilize conduction heat that transfers directly from both top and bottom providing consistent quality, improved freshness and extended hold times. Go ahead, prepare and hold food prior to the rush, your customers will notice and appreciate it!
MHC-1 units CE approved.

Product Features

Sales & Service Locator

Downloads

Technical Specifications

Certifications

Related Products

 Copyright 2011 Manitowoc Foodservice. All Rights Reserved

https://web.archive.org/web/20120503002927/http://www.mercoproducts.com/products/hold-merchandise/warmers/counter-top

INTERNET ARCHIVE WayBackMachine
http://www.mercoproducts.com/products/hold-merchandise/warmers/counter-top Go
5 captures
3 May 2012 - 4 Dec 2012
APR MAY SEP
2011 03 2012 2013
About this capture

Counter Top

	Product Name	Key Product Features	Dimensions	Rating	Downloads
	Fried Food Holding Station Reduce Waste, Improve Profits By Extending The Life Of Your Foods! Learn More	• **Therma-Lock Technology** : Constant circulation of hot air over and through food contr more... • **Longer Hold Times** : Longer hold times result in less waste, which equals increa more... • **Heavy-Duty Stainless Steel Construction** : Heavy-duty stainless steel construction provides the durabi more...	**Width** : - **Depth** : - **Height** : - **Weight** : -		Specification Sheet FFHS - Spec
	Insta-Therm Add The Finishing Touches To Entrees and Appetizers - Instantly! Learn More	• **Heavy-Duty Stainless Steel Construction** : The Insta-Therm is constructed of heavy-duty stainless stee more... • **Contact Acutated for Energy Savings** : The Insta-Therm activates upon contact of product resulting more... • **Simple On/Off Controls with Indicator Lights** : No operator training necessary, the Insta-Therm is controll more...	**Width** : 23¾" **Depth** : 14" **Height** : 9½" **Weight** : -		Specification Sheet Insta-Therm Spec Sheet
	Modular Holding Cabinets Keep Food Hot, Fresh, and Ready for Easy Assembly! Learn More	• **Individual Heat Zone for Each Bin** : Each Merco Holding Cabinet bin is sealed to prevent moistur more... • **Programmable Menu** : Merco MHC's feature easy-to-use symbols on the control pane more... • **Conduction Heat** : Merco MHC's incorporate conduction heat that directly trans more...	**Width** : 12¼" **Depth** : 11" **Height** : 6½" **Weight** : -		Specification Sheet Merco Holding Cabinet (MHC-22-GEN) Spec Sheet
	Thermal Shelves, Built-In 24" to 72" Models Available Learn More	• Hardocated aluminum or stainless steel surface • Thermostatically controlled heated base • Available in 24", 30", 36", 42", 48", 54", 60", 66" and 72" lengths	**Width** : 24" **Depth** : 20" **Height** : 3½" **Weight** : 40 lb		Specification Sheet Built-In Thermal Shelves
	Thermal Shelves, Free Standing 18" to 72" Models Available Learn More	• Stainless steel top with aluminum extruded base • Adjustable heat control • Non-slip rubber feet	**Width** : 18" **Depth** : 19½" **Height** : 2½" **Weight** : -		Specification Sheet Free Standing Thermal Shelves

 Copyright 2011 Manitowoc Foodservice. All Rights Reserved

EXHIBIT B

https://web.archive.org/web/20120507001038/http://www.mercoproducts.com/docs/uploaded/msy/products/holdingcabinet/merco_mhc_sell_1519.pdf

Merco

Holding Cabinets

Keep Food Hot, Fresh, and Ready for Assembly.

Enodis

Holding Cabinets

Keep Food Hot, Fresh, and Ready for Assembly.

Customers expect high quality food in a short amount of time. Holding cabinets from Merco® can help you accomplish just that. Units available in either a single or four bin models, allowing flexibility in holding options for greater menu variety - go ahead, prepare and hold food prior to the rush, your customers will appreciate it.

Product	Temp	Maximum Recommended Holding Time
Hot Dogs	180°F	240 minutes
Chicken Breasts	170°F	240 minutes
Sausage Patties	180°F	240 minutes
Hamburger Patties	175°F	240 minutes
Fish Fillets	155°F	240 minutes
Eggs	160°F	240 minutes
Bacon	175°F	20 minutes
Biscuits	170°F	60 minutes
Spinach Dip	180°F	240 minutes
Fruit Compote	175°F	240 minutes
Chili	175°F	240 minutes
Vegetables	150°F	60 minutes

IMPROVE FRESHNESS, EXTEND HOLDING TIMES

- **Merco® MHC's utilize conduction heat that directly transfers heat from both top & bottom with minimal heat loss, providing consistent quality, improved freshness, and extended hold times.**

VERSATILE

- **Each bin is individually controlled allowing you to hold different menu items at different temperatures. Sealed bins prevent moisture loss and flavor transfer. Standard features include removable back for pass-through applications. Hold a variety of foods at different temps - loading from cook-side and assembling server side saving time.**

MODULAR

- **Four-bin units are stackable two high, while single bin units are stackable up to three high. Mounting brackets available for under shelf mounting (vertically or horizontally) allowing operators the ability to add units as their business grows.**

PROGRAMMABLE

- **Easy to use digital controls feature time and temperature display (four bin units feature product identification display) for each bin with six-hour timer and audible alarm.**

Model #	Part #	Volts	Amps	Watts	Hz	Phase	Cord Length	Plug Type	Width	Depth	Height
MHC-22-GEN	86002	120	10.4	1250	60	Single	6′	NEMA 5-15P	19.5″ (495 mm)	13.65″ (347 mm)	10.5″ (273 mm)
MHC-1 Left Side Control	86007	120	3.0	60	60	Single	6′	NEMA 5-15P	12.25″ (311.2 mm)	11″ (279.4 mm)	6.5″ (165.1 mm)
MHC-1 Right Side Control	86009	120	3.0	60	60	Single	6′	NEMA 5-15P	12.25″ (311.2 mm)	11″ (279.4 mm)	6.5″ (165.1 mm)

For more information

Call 1-888-417-5462 or visit

www.mercosavory.com

1111 North Hadley Road, P.O. Box 1229

Fort Wayne, IN 46801-1229, USA

260-459-8200, fax 260-459-8240

https://web.archive.org/web/20120507001856/http://www.mercoproducts.com/docs/uploaded/msy/products/insta-therm/merco%20speed___accelerated!%20brochure%20(single)(1).pdf

Merco

Speed of Service...*Accelerated*!

Manitowoc

Speed of Service…*Accelerated* by Merco®!

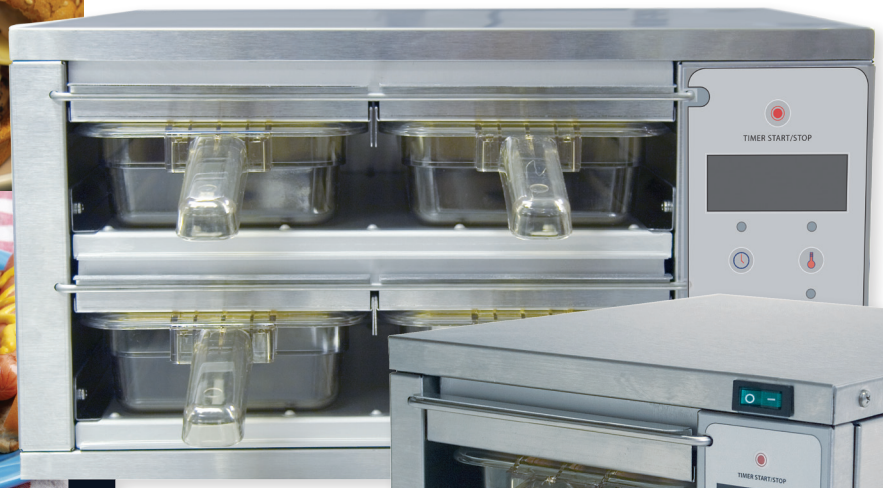

MHC-22

MHC-1

LISTED
c UL us
884B

ANSI | NSF4

MHC

Holding Cabinets from *Merco* allow flexibility in holding options for greater menu variety. Utilizing conduction heat that transfers heat directly from both top & bottom with minimal heat loss, providing consistent quality, improved freshness, and extended hold times – go ahead, prepare and hold food prior to serving, your customers will appreciate it.

Versatile: Each bin is individually controlled allowing you to hold different menu items and different temperatures. Sealed bins prevent moisture loss and flavor transfer. Standard features include removable back for pass-through applications. Hold a variety of foods at different temps – loading from cook-side and assembling server side saving time.

Modular: Four bin units are stackable two high, while single bin units are stackable up to three high with optional mounting brackets for under shelf mounting (vertically or horizontally) allowing operators the ability to add units as their business grows.

Programmable: Easy to use digital controls feature time and temp display (four bin units feature product identification display) for each bin with six-hour timer and audible alarm.

Features:

- Conduction heat.
- Independent upper & lower heating system.
- Cool touch insulation.
- Small footprint.
- Stainless steel construction.
- Digital display for each bin.
- 6-hour timer with Audible Alarm.
- Programmable menu.
- Individual heat zone for each bin.

Improve Freshness, Extend Holding Times!

Customers expect high quality food in a short amount of time. Holding, Warming and Finishing products from *Merco* can help you accomplish just that. *Merco* Holding Cabinets are perfect for keeping food hot, fresh, and ready for assembly, while the InstaTherm™ allows you to add the finishing touches instantly. With the Fried Food Holding Station (FFHS) you can please your customers every time with perfectly crisp, fresh, and hot fried foods.

Insta-Therm™

The *Merco Insta-Therm* is the perfect solution for adding the finishing touches to entrees and appetizers. No pre-heating required as the *Insta-Therm* is contact actuated for energy savings and heats instantly.

Construction: Sturdy, sanitary, stainless steel construction for years of dependable service. Featuring a large 4" x 18" product opening on both sides for easy access and pass through applications.

Energy Savings: Contact actuated quartz heating elements activate upon contact of product resulting in energy saving for operators. Indicator lights on both cook and server side illuminate when elements are active.

Features:

- Heavy-duty stainless steel construction.
- Contact actuated for energy savings.
- Simple On/Off control.
- Indicator light on cook and server side.
- No pre-heat time required - heats instantly.
- Quartz heating elements.
- Small foot print.

Add the Finishing Touches to Entrees and Appetizers – Instantly!

Reduce Waste, Improve Profits!

FFHS-27

FFHS-16

ANSI | NSF4
LISTED
C UL US
884B

FFHS

Extend the life of your fried foods with a *Fried Food Holding Station* from *Merco*. Available in three widths and featuring a versatile divider system, the *Merco Fried Food Holding Station* can keep a variety of fried products at their peak serving temperature. Internally controlled air temperature of 230°F is directed over and through fried foods using Therma-Lock™ technology to maintain optimum product temperature and crispness, extending product retention up to 3 times!

Construction: The *Merco Fried Food Holding Station* features solid stainless steel construction for exceptional durability, aesthetics and cleanability. The product tray, grease tray, and product dividers are easily removable for fast clean up. Units feature heavy-duty components and front-centered on/off switch to provide durability to meet the demands of the commercial kitchen.

Versatile: Unique ergonomic design allows the unit to be placed on any countertop as overhead heating elements are not required. Available in three sizes, the *Merco Fried Food Holding Station* is sure to meet any capacity requirement from early morning breakfast to midnight buffets.

Simple Operation: The air flow and internally controlled temperature of the *Merco Fried Food Holding Station* is factory pre-set for optimum holding time for all fried foods. No adjustment of air flow or temperature is required; units are controlled by simple lighted on/off switch.

Features:

- Heavy-duty stainless steel construction.
- Removable product dividers, product tray and grease tray.
- Available in 10", 16" or 27" models.
- Therma-Lock™ Technology insures constant circulation of hot air over and through food to control moisture and maintain crispness.
- Unique ergonomic design allows the unit to be placed on any countertop or dropped-in to any work station as overhead heating elements are not required.

Merco

1111 North Hadley Road
P.O. Box 1229
Fort Wayne, Indiana 46801-1229

Tel 1.260.459.8200
Fax 1.260.459.8240
Toll Free 1.888.417.5462
E mail info@mercosavory.com

©2009 Merco Savory Products, LLC.
Printed in the U.S.A.
#1455-2.5K-01/09

https://web.archive.org/web/20120507004226/http:/www.mercoproducts.com/docs/uploaded/msy/products/HoldingCabinet/10001276-02%2520-%2520Rev%2520J.pdf

operator manual

MHC-22-GEN Holding Cabinet

Models 86002 & 86003

This document includes:

- Safety notices
- Specifications
- Installation instructions
- Operating instructions
- Cleaning instructions
- Warranty statement

Revision: J
P/N: 10001276-02

Merco, LLC
1111 North Hadley Road
Fort Wayne, Indiana 46804
United States of America
Technical Support Hotline: (800) 678-9511
Telephone: (260) 459-8200
www.mercosavory.com

IMPORTANT WARNING AND SAFETY INFORMATION

THE OPERATOR OF THIS EQUIPMENT IS SOLELY RESPONSIBLE FOR ENSURING THAT FOOD ITEMS REMAIN AT SAFE HOLDING TEMPERATURE LEVELS. FAILURE TO DO SO COULD RESULT IN UNSAFE FOOD PRODUCT FOR CUSTOMERS.

FOR YOUR SAFETY, DO NOT STORE OR USE GASOLINE OR OTHER FLAMMABLE VAPORS OR LIQUIDS IN THE VICINITY OF THIS OR ANY OTHER APPLIANCE.

DO NOT SPRAY AEROSOLS IN THE VICINITY OF THIS APPLIANCE WHILE IT IS IN OPERATION.

WARNING: IMPROPER INSTALLATION, ADJUSTMENT, ALTERATION, SERVICE OR MAINTENANCE CAN CAUSE PROPERTY DAMAGE, INJURY OR DEATH. READ THE INSTALLATION, OPERATING, AND MAINTENANCE INSTRUCTIONS THOROUGHLY BEFORE INSTALLING OR SERVICING THIS EQUIPMENT.

TABLE OF CONTENTS

BEFORE INSTALLATION....2
SITE PREPARATION....2
UNIT SPECIFICATIONS....3
INSTALLATION INSTRUCTIONS....4
CONTROL PANEL ILLUSTRATION....6
QUICK–START PROGRAMMING INSTRUCTIONS....7
- CREATING A FOOD PRODUCT NAME....9
- ASSIGNING UPPER & LOWER TEMP SETTINGS FOR FOOD PRODUCT....11
- ASSIGNING “COOK TIME” AND “DUMP TIME” SETTINGS FOR PRODUCT....13
- ASSIGNING FOOD PRODUCT TO A STORAGE BIN....15

OPERATING INSTRUCTIONS....16
CLEANING AND MAINTENANCE....18
HOW TO OBTAIN SERVICE....18
PERSONALIZED PRODUCT SETTINGS CHART....20
WARRANTY....23

BEFORE INSTALLATION

NOTE: Upon receipt of this product, immediately unpack and inspect for possible concealed shipping damage. If the unit is found to be damaged, save all packing materials and contact your delivery carrier within 15 days. Refer to “Shipping Damage Instructions” enclosed for detailed instructions. Failure to follow these instructions will negate Merco’s or your ability to file claims and receive compensation for shipping damage.

This manual contains important safety and installation/operation instructions. Require all operators to read this manual before using the unit. Failure to follow the instructions contained in this manual may cause injury or damage to the unit and will void the warranty.

SITE PREPARATION

Choose a well-ventilated location. Place the holding cabinet on a suitable table or counter capable of supporting the weight of 30 lbs. or 14 kg. The power supply must be in accordance with the specifications on the data plate located on the rear of the appliance. It should be installed on a dedicated service line with no other equipment on the circuit. The unit must be positioned so that the unit’s plug is accessible.

UNIT SPECIFICATIONS

Model	Voltage	Amps	Watts	Hz.	Net Wt. lbs./kg	Plug
86002	120	10.4	1320	60	30/14	NEMA 5-15P
86003 (CE)	230	5.75	1320	50	30/14	CEE 7/7

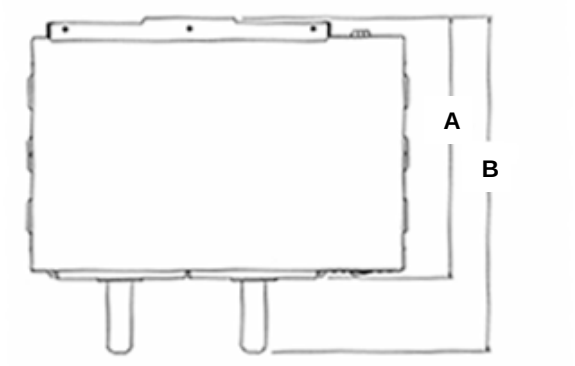

TOP VIEW

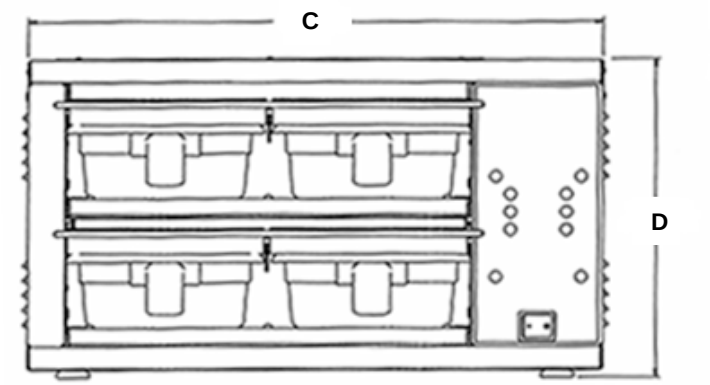

FRONT VIEW

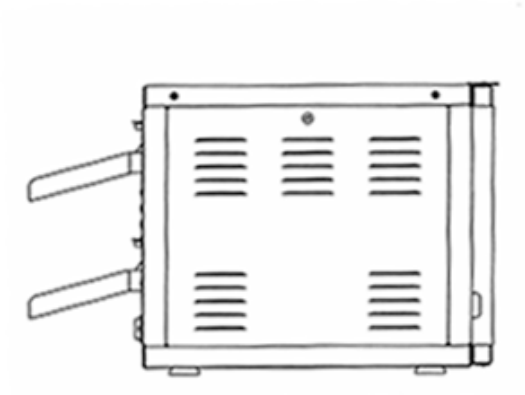

SIDE VIEW

	A	B	C	D
MEASUREMENT	13.485” (342.5mm)	17.375” (441.3mm)	19.5” (495.3mm)	10.764” (273.4mm)

INSTALLATION INSTRUCTIONS

1. Remove legs from unit.
2. Place mounting brackets on either side of unit and attach by inserting the screws/washers (provided) into the holes left by the vacated legs. Tighten firmly.
3. With brackets securely attached to the unit, place the unit where it is to be mounted and mark the locations for stud placement.
4. Mount unit to shelf using hardware (not included) capable of handling the weight of unit.
5. With stud locations marked, attach studs with stud gun. Insert nut and washer on each stud then insert unit with mounting brackets followed by additional washers and nuts to complete the installation. *NOTE: Studs should be ¼-20 Stainless Steel. Studs, washers and nuts are not included.*

KIT CONTENTS & QTY

BRACKET (2)
SCREW (4) – *not shown*
WASHER (4) – *not shown*

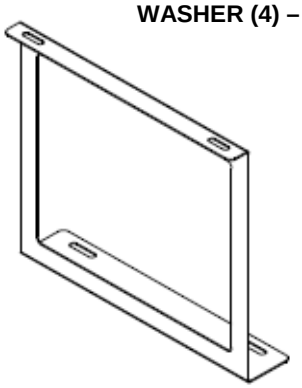

TOP VIEW

HOLE LOCATIONS TO MARK FOR STUD PLACEMENT

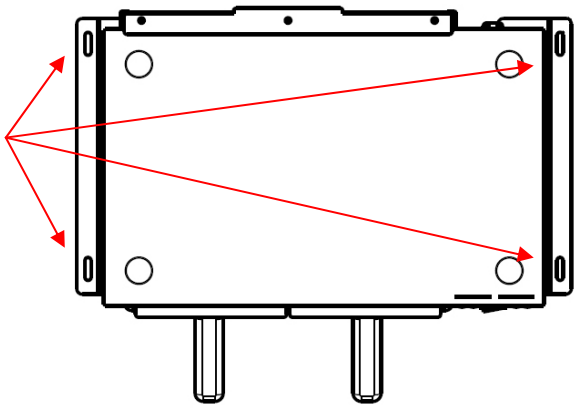

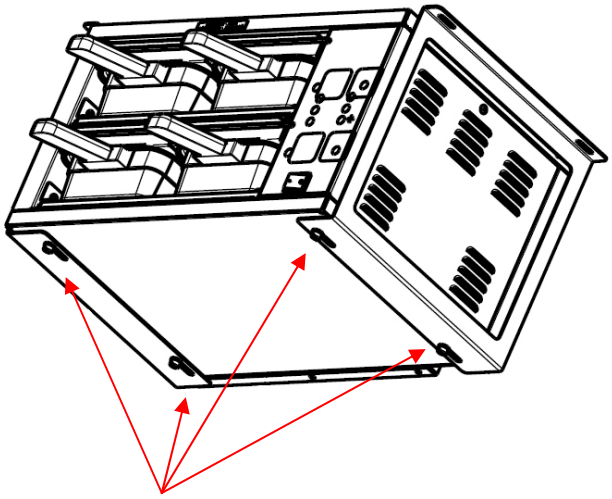

STEP 2

VIEW OF UNIT WITH PROPERLY ATTACHED MOUNTING KIT

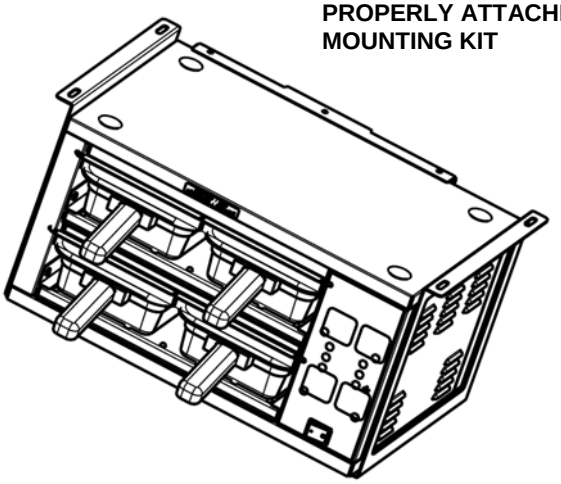

This page intentionally left blank.

CONTROL PANEL ILLUSTRATION

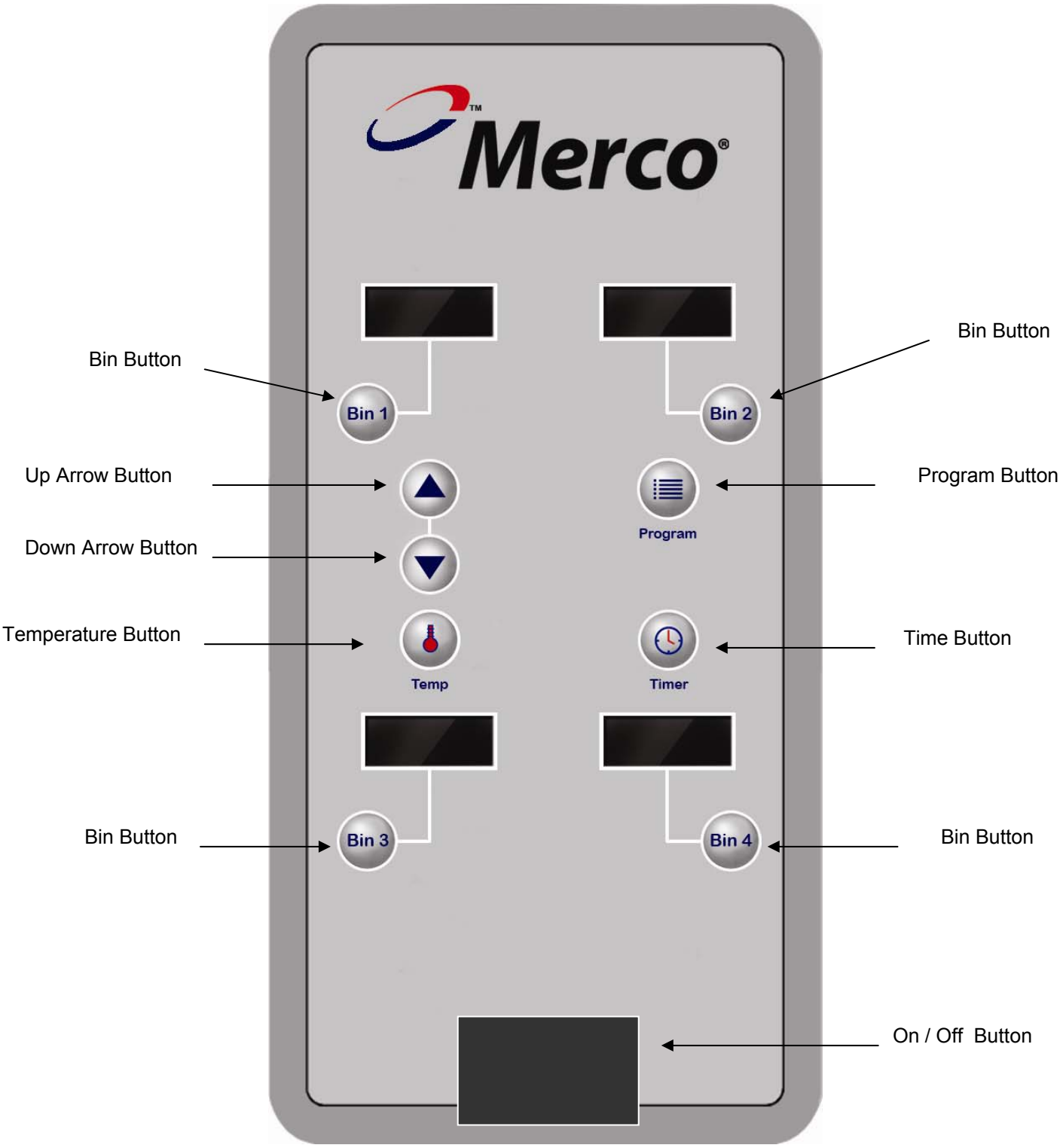

6

PRE-PROGRAMMED MENU ITEMS

For your convenience, the Merco Holding Cabinet has been pre-programmed with numerous food items that might be useful with your application. A complete listing of pre-programmed menu items and their respective settings can be found in the "Application Guide" section of this manual. If you decide to use any of these pre-programmed menu items, move directly to Part Four of the Quick-Start Programming Instructions listed below. If you wish to create a new menu item, please follow all four parts of the Quick-Start Programming Instructions listed below.

QUICK–START PROGRAMMING INSTRUCTIONS

This unit has the flexibility to provide the operator with numerous options throughout the programming process. The instructions on the following pages will help you to easily navigate through the basic process of setting up the food items and storing them to the desired bins. The information listed below has been formatted to provide you with a brief overview of what programming steps will be performed on the following pages. Please read this information first before beginning the five-step process.

PART ONE – ASSIGNING A FOOD ITEM NAME INTO MEMORY

Part one allows you to create a food product name you wish to save in memory. The display allows for the use of up to four characters in assigning a name. So, if you wish to assign the food item "bacon", you may want to save the name as "BACN".

PART TWO – TEMPERATURE SETTINGS FOR FOOD ITEMS

Food items may have unique temperature settings necessary to hold and maintain quality. As a result, temperature settings need to be assigned to each food item created.

PART THREE – TIME SETTINGS FOR FOOD ITEMS

Food items may also have unique time settings necessary to hold and maintain quality. As a result, two separate time settings need to be assigned to each food item created.

PART FOUR – ASSIGNING FOOD ITEM TO A STORAGE BIN

At this point all the necessary characteristics have been assigned to the food product created. The last step in the process is to assign that food item (and its temperature and time setting characteristics) to the desired storage bin. Once this has been completed you are ready to go back to part one and create the next food item.

NOTE: When programming the unit, the operator will have a maximum of 14 seconds between programming steps before the unit will "time out." If this happens the operator will be required to begin again with the first step in the "part" (i.e., part one, two, three, four or five as listed above).

FOR YOUR CONVENIENCE, A PERSONALIZED PRODUCT SETTINGS CHART HAS BEEN INCLUDED ON PAGE 20. AS MENU ITEMS ARE STORED AND SAVED INTO MEMORY, WE RECOMMEND YOU NOTE THESE INDIVIDUAL SETTINGS IN THE CHART FOR FUTURE REFERENCE.

FOOD PRODUCT NAMES

The MHC-22-GEN can hold up to 32 separate food items in memory. Each of these food items are programmed by the operator with various temperature, time, and bin location settings. These food items correspond to the four product storage bins of the unit.

PART ONE: CREATING A FOOD PRODUCT NAME

1		Press and hold “program” button until you hear a short, double-beep sound. Release.
2		Press and hold “program” button *again* until you hear a short, double-beep sound. Release.
3	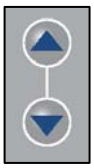	Press “Up Arrow” button or “Down Arrow” button to locate the next available name slot (PD1, PD2, PD3, etc). This is where you create the name of the food item and save it to memory. For example, you may want to save “bacn” in place of “PD2”.
4	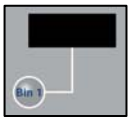	Press and release “Bin 1” button. Display will flash.
5	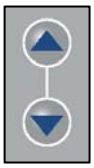	Press “Up Arrow” button or “Down Arrow” button to change the first character in the name of the food item you wish to save into memory.
6	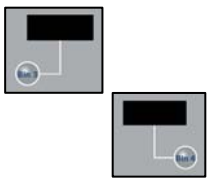	Press “Bin 4” button to move to the next character in the name of the food item you wish to save. If you need to go back to a previous character, press “Bin 3” button.
7	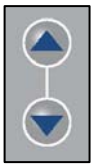	Press “Up Arrow” button or “Down Arrow” button to change the second character in the name of the food item you wish to save. Continue through steps 4 and 5 until finished with the last character of the name of food item. Remember there is a maximum of four available characters to spell item name.
8		Press and hold the “Program” button until you hear a short, double-beep sound to save setting and return to normal operating mode.

UPPER & LOWER TEMPERATURE SETTINGS FOR FOOD PRODUCT

Each product “bin” has upper and lower heating elements that provide the heat necessary to hold your food product. It is critically important that each of these “heat zones” be set to the appropriate temperature for each type of food product you wish to store in the bins. The temperature settings for each of these bins will change with the type of food product being stored.

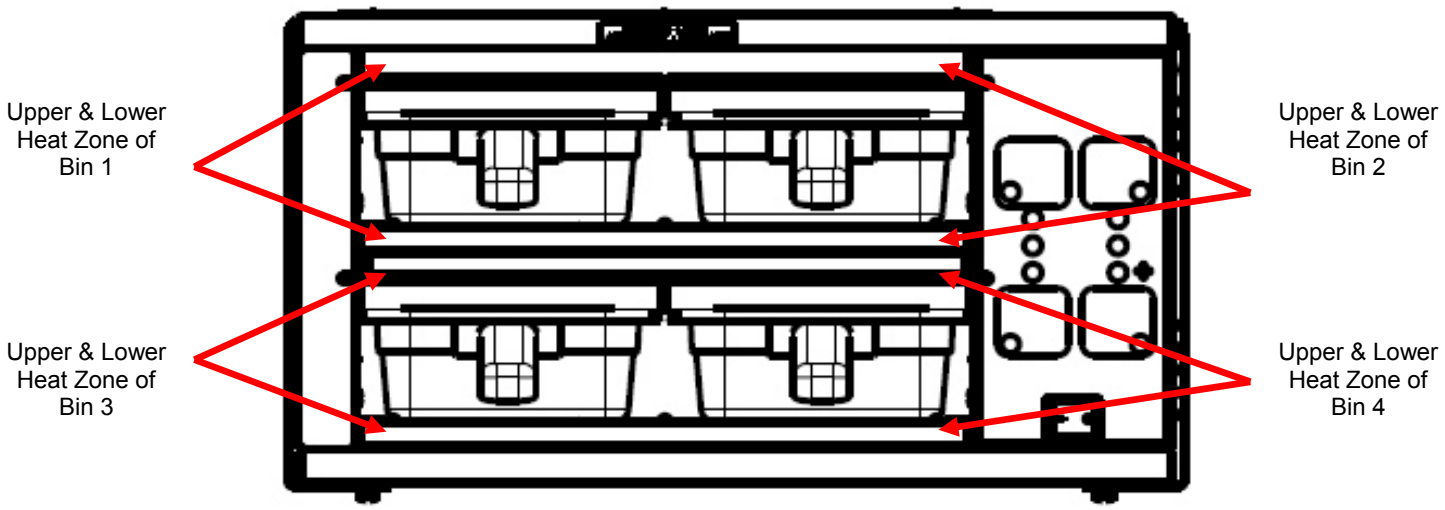

PART TWO: ASSIGNING UPPER & LOWER TEMP SETTINGS FOR FOOD PRODUCT

1		Press and hold “program” button until you hear a short, double-beep sound. Release.
2		Press and hold “program” button *again* until you hear a short, double-beep sound. Release.
3	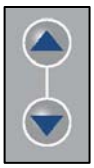	Press “Up Arrow” button or “Down Arrow” to locate desired product (displayed in Bin 1).
4		Press “temp” button to make changes the lower temperature of the selected product.
5	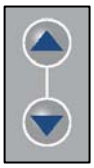	Press “Up Arrow” button or “Down Arrow” to set the lower temperature.
6		Press “temp” button again to make changes the upper temperature.
7	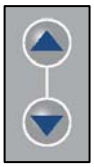	Press “Up Arrow” button or “Down Arrow” to set the upper temperature.
8		Press and hold “program” button until you hear a short, double-beep sound. Release. Lower and upper temperature settings for desired product have now been saved. *Follow these steps each time (while selecting the appropriate product in step 3) to assign lower and upper temperature settings to each food product.*

FOOD PRODUCT “COOK TIME” AND “DUMP TIME”

The MHC-22-GEN unit has been designed to provide the operator with two different types of alarms; “Cook Time” and “Dump Time”. The operator will assign these times to each type of food product being held.

COOK TIME ALARM: This alarm has been designed to provide the operator advance warning that the product being held in the assigned bin is set to expire shortly. When this alarm sounds, the operator should begin preparing additional food to ensure there is no “down time” between preparing and providing food. The “cook time” alarm should be set for the time necessary to completely prepare additional product of this type.

DUMP TIME ALARM: This alarm has been designed to provide the operator with a warning that the food product has reached the end of its “shelf life” and should be discarded. To insure the highest level of quality, food product should never be given to customers after the “dump time” alarm has sounded.

PART THREE: ASSIGNING “COOK TIME” AND “DUMP TIME” SETTINGS FOR PRODUCT

1		Press and hold “program” button until you hear a short, double-beep sound. Release.
2		Press and hold “program” button *again* until you hear a short, double-beep sound. Release.
3	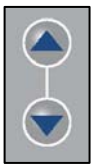	Press “Up Arrow” button or “Down Arrow” to scroll through the available names in memory until you reach the desired product name.
4		Press “time” button to select “cook time” setting.
5	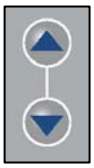	Press “Up Arrow” button or “Down Arrow” to set the appropriate “cook time”. *(Note: Time characters are equal to hours and minutes. For example, 2:05 is equal to 2 hours and 5 minutes).*
6		Press “time” button to select “dump time” setting.
7	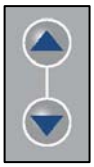	Press “Up Arrow” button or “Down Arrow” to set the appropriate “dump time”. *(Note: Time characters are equal to hours and minutes. For example, 2:05 is equal to 2 hours and 5 minutes).*
8		Press and hold “program” button until you hear a short, double-beep sound. Release. The “cook time” and “dump time” settings have been saved. *Follow these steps each time (while selecting the appropriate product in step 3) to assign “cook and dump time” settings to each product.*

STORAGE BINS FOR FOOD PRODUCT

With the MHC-22-GEN unit, a total of 32 separate food items can be store in memory. Of these 32 food items, any combination of 4 food items may be made active at any one time. For example, all four bins could hold hamburger at the same time or they could be used to hold four separate food items.

The trays used to hold the food product in each bin are made of plastic and are dishwasher safe. These trays are also interchangeable between bins.

PART FOUR: ASSIGNING FOOD PRODUCT TO A STORAGE BIN

1		Press and hold “program” button until you hear a short, double-beep sound. Release.
2	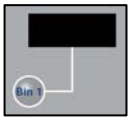	Press “Bin 1”.
3	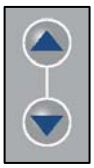	Press “Up Arrow” button or “Down Arrow” to scroll through the available names in memory until you reach the desired product name.
4		Press and hold “program” button until you hear a short, double-beep sound. Release. The product name is now stored in Bin 1. *Follow these steps each time (while selecting the appropriate bin in step 2) to assign product name to each of the 4 available bins.*

The process of creating a food item, storing its characteristics, and assigning it to a bin are complete. Follow these steps again to create and assign additional food items.

OPERATING INSTRUCTIONS

The Merco Holding Cabinet has been designed to afford foodservice operators the ability to cook menu components in advance and then gently store that product in the holding bins until an order is received. Once that order has been placed, the crew can assemble the order using hot and fresh menu components from the holding bins. This allows for operators to "serve to order," helping increase speed of service while maintaining high product quality standards.

The Holding Bin Controller is, at all times, operating in one of three modes:

- Normal Mode
- Programming Mode
- Diagnostic Mode

Instructions for each of these operating modes are detailed below.

WARNING: If the supply cord appears to be damaged, do not attempt to operate unit. Contact service agent or qualified technician to repair.

CAUTION: When holding potentially hazardous foods, the minimum shelf temperature must be 220°F for the upper-bin heating element and 200°F for the lower-bin heating element.

NORMAL MODE

This is the normal mode of operation. The product for each bin is displayed, timers are activated for loaded bins, alarms are generated for "cook more" and "expired" product.

► Typical Operator Actions

ACTION	INSTRUCTIONS
Turn Unit On	Push "Power On / Power Off" button. Green "Power" button will illuminate in "on" position.
Load bin with product and start timer	Pull out tray, load product and reinsert bin. Push and hold "bin" button. Bin display will change to show presence of product. Control will sound one short beep. Release hold of "bin" button.
Empty bin and stop timer	Pull out tray and remove product. Reinsert tray. Press and hold "bin" button. The bin display will indicate empty bin (----). Control will sound one short beep.
Silence Alarm for "Cook" or "Dump"	Locate bin displaying "Attn" and press the "bin" button. The alarm will be silenced. Bin will continue to indicate desired action: "Cook" (It is now time to cook additional product) or "Dump" (It is now time to discard product in bin).

► Normal Display Modes

Each bin display consists of two parts, a primary and secondary message word. These words are displayed one after the other, repeating regularly. The following sections describe the type of displays present under various conditions.

Bin Empty Display – Bin display shows product name followed by "----" to indicate that bin is empty.

Bin Loaded – Bin display shows product name followed by a brief display of the time remaining until the product expires.

Bin Alarm for "Cook More" – Bin display shows "Attn" and a brief "Cook" message. Once the alarm is silenced, the display will show the product name followed by "Cook." This condition persists until the product expires or the bin is emptied.

Bin Alarm for "Holding Time Expiration" – Bin display shows "Attn" followed by "Dump." Once the alarm is silenced, the display indicates the product name followed by "Dump." This condition persists until the bin is emptied.

PROGRAMMING MODE

See "Quick Start Programming Instructions" beginning on page 7 for detailed information.

DIAGNOSTIC MODE

To reset the holding bin controller to the factory configuration, hold down the top two "bin" buttons while powering on the controller. Release as soon as displays come on. See page 20 for factory default settings.

CLEANING AND MAINTENANCE

DANGER:	Disconnect power supply before servicing or cleaning this unit. Safeguard power so it cannot be accidentally restored. Failure to do so could result in serious injury.
CAUTION:	Unit must be cool to touch and disconnected from power source prior to cleaning. Do not use power-cleaning equipment, steel wool, or wire brushes on stainless steel or painted surfaces.
CAUTION:	This appliances plug is the disconnect device and, as such, the unit must be installed so that the plug is accessible.

Merco Holding Cabinets are designed for easy cleaning and minimum maintenance. The stainless steel outer case requires nothing more than a daily wiping with a damp cloth. If, however, an excessive amount of food particles / grease are allowed to collect, a non-abrasive cleaner (hot sudsy water) may be used. The Product Holding Bin and Bin Lid may be cleaned via dishwasher or with warm soapy water. Care must be taken to prevent water or cleaning compounds from getting on internal parts, especially the switches on the control panel.

BIN LID REMOVAL INSTRUCTIONS

Note: The illustration below features a Merco MHC-1 (1-Bin Unit). These instructions also apply to the MHC-22 (2x2 Bin Unit).

1. REMOVE BIN

2. GENTLY PULL RETENTION ROD

3. LOWER FRONT OF BIN LID

4. REMOVE BIN LID

5. INSTALL IN REVERSE ORDER

NOTE: WHEN INSTALLING THE BIN LID, BE SURE BACK END OF LID RESTS ON THE REAR RETAINING ROD, OTHERWISE THE LID WILL NOT REST PROPERLY ON THE BIN.

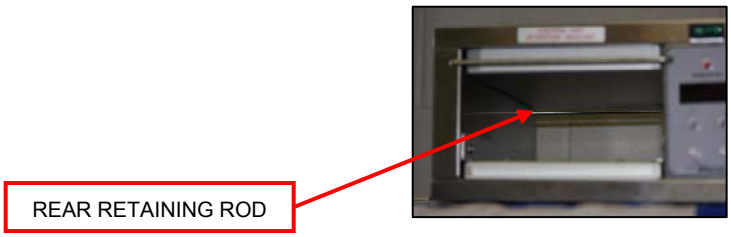

HOW TO OBTAIN SERVICE

Please contact Merco Technical Service at (800) 678-9511 with questions or concerns relating to this equipment.

APPLICATION GUIDE

The guide shown below contains food items that have been pre-programmed at the factory for your convenience. Please note that this is meant to be a guide and that minor adjustments may be necessary to meet your specific quality requirements.. We recommend that you test these items and adjust settings as needed.

Product Code	Product Description	Entry Temp (°F)	Upper Temp (°F)	Lower Temp (°F)	Recommended Hold Time (mins)	Recommended Cook Time (mins)
Eggs	Eggs	160	160	180	60	10
Bacn	Bacon	175	200	200	20	5
Hsh1	Hash Browns	180	200	200	15	5
Hsh2	Hash Browns (cover removed)	180	200	200	20	5
Bsct	Biscuits	170	200	200	60	10
Saus	Sausage Patties	180	200	200	240	15
Ham	Ham Steak	160	200	200	120	10
Dogs	Hot Dogs	180	200	200	240	15
Ch Br	Chicken Breasts	170	200	200	240	15
Burg	Hamburger Patties	175	200	200	240	15
Fish	Breaded Fish Fillets	180	190	190	45	10
Ck Pt	Breaded Chicken Patties	180	200	200	45	10
Mt Lf	Meat Loaf	180	220	220	120	10
Mt Bl	Meatballs	180	220	220	120	10
Past	Pasta	180	200	200	240	15
Veg	Vegetables	150	200	200	120	10
Frut	Fruit Compote	175	200	200	240	15
Chil	Chili	175	200	200	240	15
Spin	Spinach Dip	180	200	200	240	15
Mozz	Mozzatella Sticks	165	200	200	15	5
Popp	Poppers	175	200	200	15	5
PD22	n/a	n/a	200	200	240	15
PD23	n/a	n/a	200	200	240	15
PD24	n/a	n/a	200	200	240	15
PD25	n/a	n/a	200	200	240	15
PD26	n/a	n/a	200	200	240	15
PD27	n/a	n/a	200	200	240	15
PD28	n/a	n/a	200	200	240	15
PD29	n/a	n/a	200	200	240	15
PD30	n/a	n/a	200	200	240	15
PD31	n/a	n/a	200	200	240	15
PD32	n/a	n/a	200	200	240	15

PERSONALIZED PRODUCT SETTINGS

The following chart has been provided as a reference tool for future use if you decide to create new menu items separate from what have been pre-programmed. We recommend writing the food item characteristics in the chart below to use as a quick reference tool. You may want to revert back to this chart in the future to reference the different saved settings (product name, upper temp, lower temp, cook time, dump time).

Product Name		Upper Temp	Lower Temp	Cook Time	Dump Time
PD01					
PD02					
PD03					
PD04					
PD05					
PD06					
PD07					
PD08					
PD09					
PD10					
PD11					
PD12					
PD13					
PD14					
PD15					
PD16					
PD17					
PD18					
PD19					
PD20					
PD21					
PD22					
PD23					
PD24					
PD25					
PD26					
PD27					
PD28					
PD29					
PD30					
PD31					
PD32					

This page intentionally left blank.

This page intentionally left blank.

LIMITED WARRANTY FOR COMMERCIAL PRODUCTS

LIMITED WARRANTY

Merco/Savory LLC, ("Merco") warrants this product to be free from defects in material and workmanship for a period of:

- One (1) year from date of product installation or eighteen (18) months from the date of shipment from our facility, whichever comes first.
- Calrod and Pyrex Heating Elements only – two (2) year warranty against burnout (excluding breakage) from date of shipment from our facility.
- Quartz Heating Elements only – ninety (90) days warranty against burnout (excluding breakage) from date of shipment from our facility.
- Hot Food Server products only – one (1) year labor, two (2) years parts from the date of shipment from our facility.

During the warranty period, Merco shall, at Merco's option, repair, or replace parts determined by Merco to be defective in material or workmanship, and with respect to services, shall re-perform any defective portion of said services. The foregoing shall be the sole obligation of Merco under this Limited Warranty with respect to the equipment, products, and services. With respect to equipment, materials, parts and accessories manufactured by others, Merco's sole obligation shall be to use reasonable efforts to obtain the full benefit of the manufacturer's warranties. Merco shall have no liability, whether in contract, tort, negligence, or otherwise, with respect to non-Merco manufactured products.

WHO IS COVERED

This Limited Warranty is available only to the original purchaser of the product and is not transferable.

EXCLUSIONS FROM COVERAGE

- Repair or replacement of parts required because of misuse, improper care or storage, negligence, alteration, accident, use of incompatible supplies or lack of specified maintenance shall be excluded
- Normal maintenance items, including but not limited to, light bulbs, fuses, gaskets, O-rings, interior and exterior finishes, lubrication, de-liming, broken glass, etc.
- Failures caused by improper or erratic voltages
- Improper or unauthorized repair
- Changes in adjustment and calibration after ninety (90) days from equipment installation date
- This Limited Warranty will not apply to any parts subject to damage beyond the control of Merco, or to equipment which has been subject to alteration, misuse or improper installation, accidents, damage in shipment, fire, floods, power changes, other hazards or acts of God that are beyond the control of Merco.
- This Limited Warranty does not apply, and shall not cover any products or equipment manufactured or sold by Merco when such products or commercial equipment is installed or used in a residential or non-commercial application. Installations not within the applicable building or fire codes render this Limited Warranty and any responsibility or obligations associated therein null and void. This includes any damage, costs, or legal actions resulting from the installation of any Merco commercial cooking equipment in a non-commercial application or installation, where the equipment is being used for applications other than those approved for by Merco.

LIMITATIONS OF LIABILITY

The preceding paragraphs set forth the exclusive remedy for all claims based on failure of, or defect in, products or services sold hereunder, whether the failure or defect arises before or during the warranty period, and whether a claim, however instituted, is based on contract, indemnity, warranty, tort (including negligence), strict liability, implied by statute, common-law or otherwise , and Merco its servants and agents shall not be liable for any claims for personal injuries, incidental or consequential damages or loss, howsoever caused. Upon the expiration of the warranty period, all such liability shall terminate. THE FOREGOING WARRANTIES ARE EXCLUSIVE AND IN LIEU OF ALL OTHER WARRANTIES, WHETHER WRITTEN, ORAL, IMPLIED OR STATUTORY. NO IMPLIED WARRANTY OF MERCHANTABILITY OR FITNESS FOR PARTICULAR PURPOSE SHALL APPLY. MERCO DOES NOT WARRANT ANY PRODUCTS OR SERVICES OF OTHERS.

REMEDIES

The liability of Merco for breach of any warranty obligation hereunder is limited to: (i) the repair or replacement of the equipment on which the liability is based, or with respect to services, re-performance of the services; or (ii) at Merco's option, the refund of the amount paid for said equipment or services.

Any breach by Merco with respect to any item or unit of equipment or services shall be deemed a breach with respect to that item or unit or service only

WARRANTY CLAIM PROCEDURE

Customer shall be responsible to:

- Immediately advise the Dealer or Merco's Authorized Service Agent of the equipment serial number and the nature of the problem.
- Verify the problem is a factory responsibility. Improper installation or misuse of equipment, are not covered under this Limited Warranty.
- Cooperate with the Service Agency so that warranty service may be completed during normal working hours.
- Travel Time not to exceed two hours and mileage not to exceed one hundred (100) miles.
- Portable equipment weighting less than ninety (90) pounds must be delivered to the Service Agent at Customer's expense.

GOVERNING LAW

This Limited Warranty shall be governed by the laws of the state of Delaware, USA, excluding their conflicts of law principles. The United Nations Convention on Contracts for the International Sale of Goods is hereby excluded in its entirety from application to this Limited Warranty

Merco, LLC
1111 North Hadley Road
Fort Wayne, Indiana 46804
USA
www.mercosavory.com

https://web.archive.org/web/20120507012200/http://www.mercoproducts.com/docs/uploaded/msy/products/holdingcabinet/mhc-22-gen%20-%20service%20manual.pdf

PARTS & SERVICE MANUAL

MHC-22-GEN Holding Cabinet

Model 86002

P/N: L340137
REV: 2.19.09

Merco, LLC
1111 North Hadley Road
Fort Wayne, Indiana 46804
Telephone: 260.459.8200
Fax: 888.790.8193
Technical Support: 800.678.9511
mercosavory.com

SPECIFICATIONS

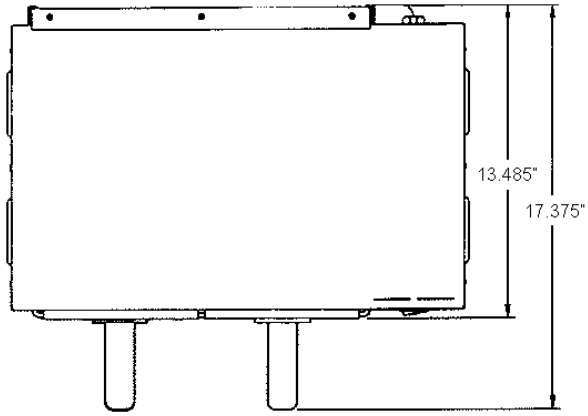

TOP VIEW

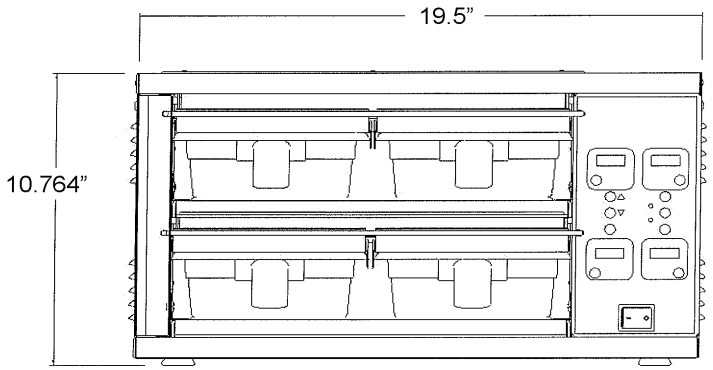

FRONT VIEW

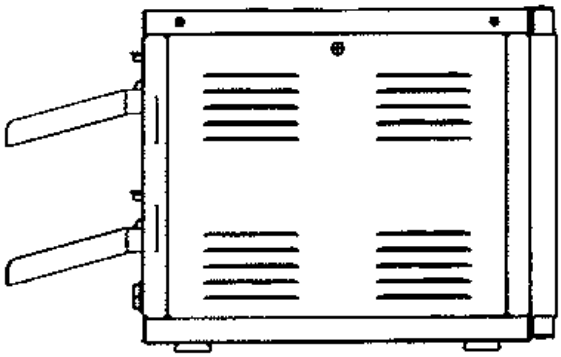

SIDE VIEW

Model #	Voltage	Amps	Watts	Hz.	Net Wt. lbs./kg	Plug
86002	120	10.4	1250	60	30/14	6’ Nema 5-15P

MHC-22-GEN CONTROL PANEL
MODEL 86002

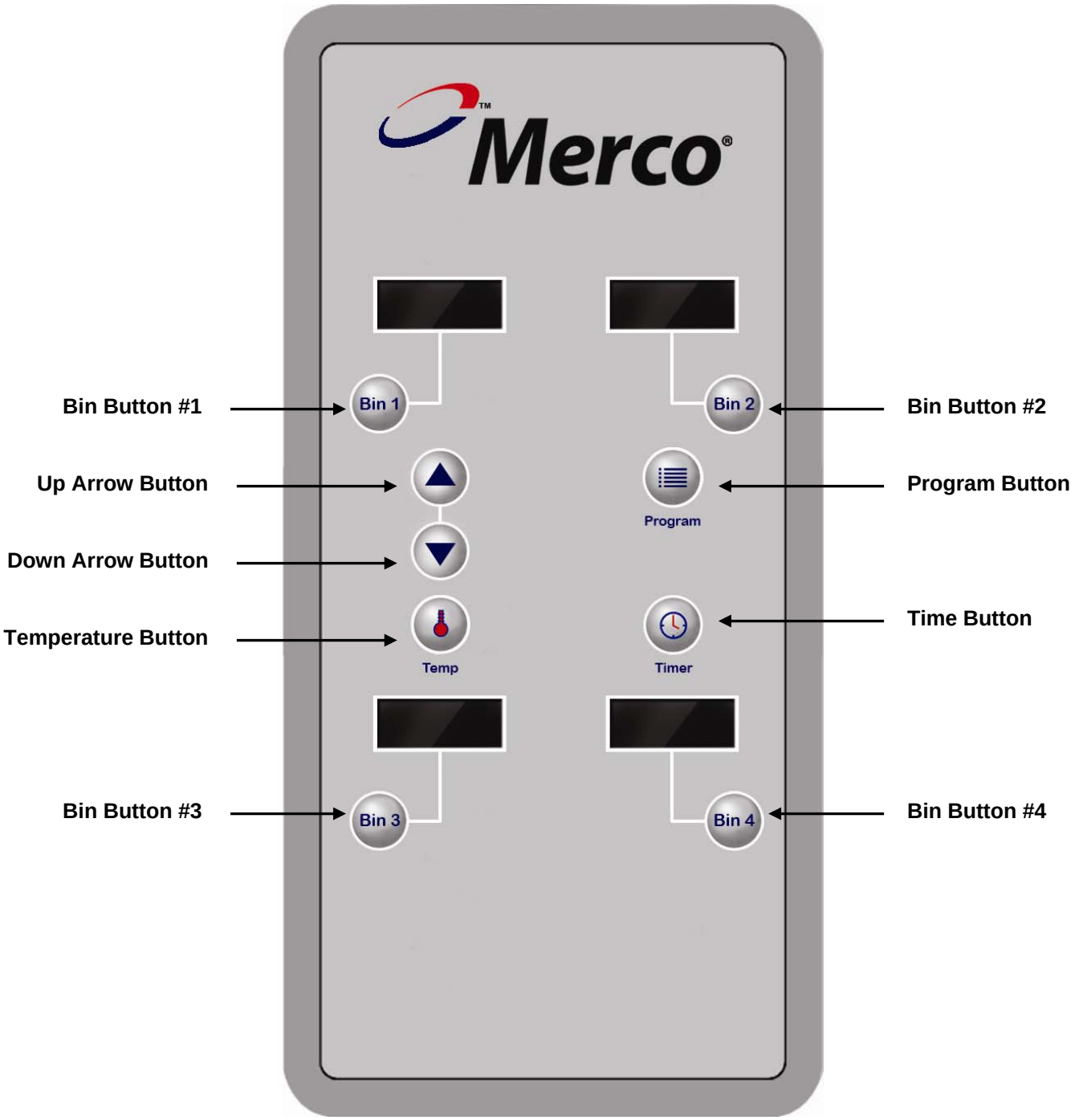

WIRING DIAGRAM

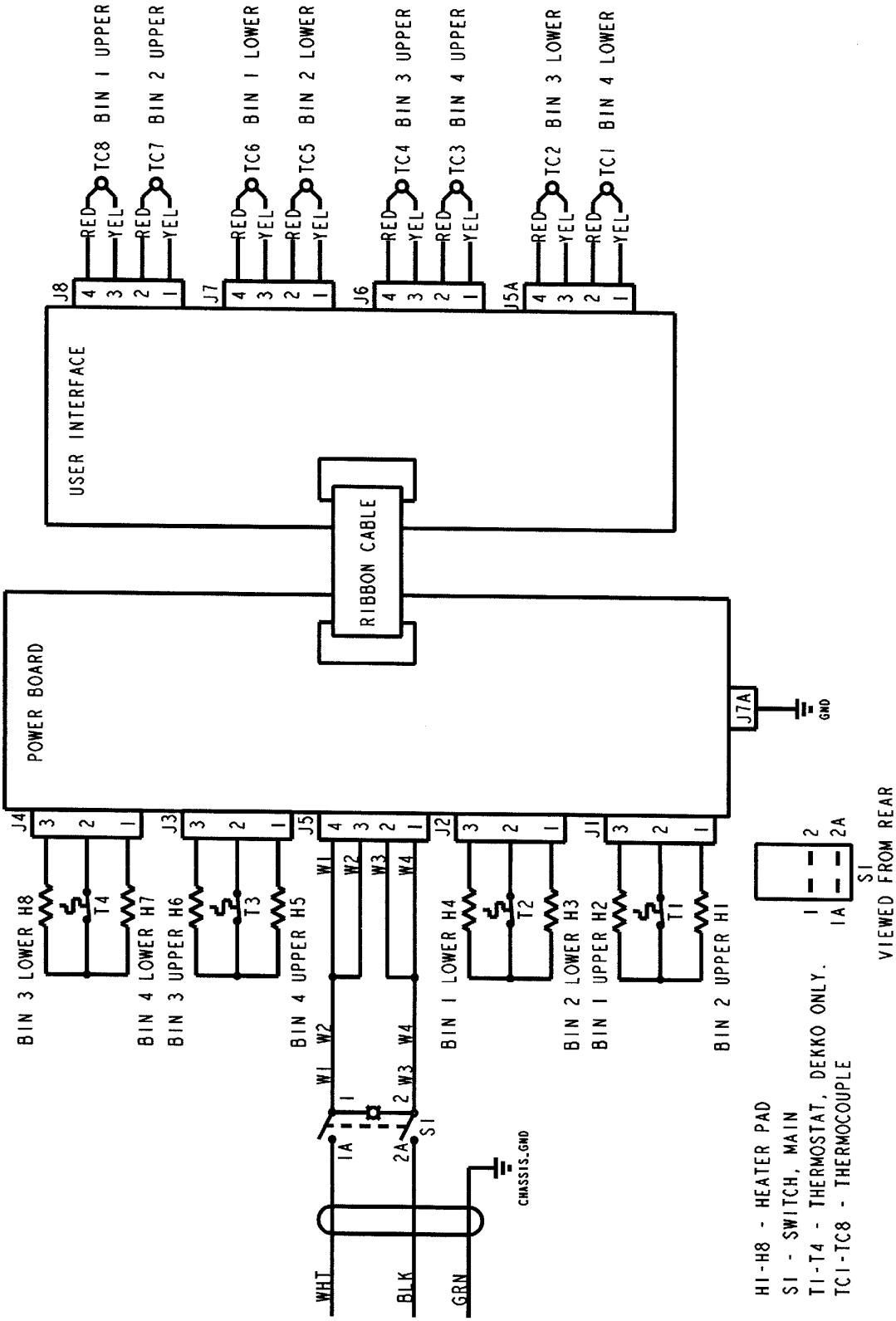

SEQUENCE OF OPERATION

Power Supply	Electrical power is supplied to the unit by a 3 conductor service for single phase. 120VAC Black conductor is hot. White conductor is neutral. Green and yellow conductor is ground. Power is permanently supplied to the main power switch.
Heating Circuit	Closing the main power switch supplies voltage to the power board and user interface. Temperature is set through the user interface which then intermittently supplies 120VAC to the heater plates. Temperature is then controlled by the thermocouples sending a reference signal back to the user interface.

TROUBLESHOOTING GUIDE

SYMPTOM	POSSIBLE CAUSE	EVALUATION
Holding Cabinet will not heat	Incoming Power Supply	Verify power cord is secured firmly in receptacle. Measure the incoming voltage. Check circuit breakers. Reset if required. Call power company if needed.
	Power Switch	Check continuity between switch terminals. Replace switch as needed.
Unit doesn't reach desired temperature	Thermocouple	Check for continuity in circuit.
	Heat Element	Compare cavity temperature with display reading. Insert temperature probe into center of cavity. Acceptable temperature variation is +/- 20° from display reading. Check for loose connection. Check the Amp draw on each element for proper load. Check page 2 for rating information. If the amp draw is high or low, check the individual elements for opens, shorts and proper resistance. WITH POWER OFF: To check resistance of the elements, remove all leads from the elements and use a digital multimeter. The element resistance should be as follows: 120V – 87 ohms Replace heating element (shelf) as needed.
		Check thermostat (common wire). Please note that if thermostat is bad, both circuits will be bad.
Temperature is too high	Thermocouple	Check for incorrectly wired thermocouple. Thermocouple wire polarities are reversed.
	Heat Element	Compare cavity temperature with display reading. Insert temperature probe into center of cavity. Acceptable temperature variation is +/- 20° from display reading. Check for loose connection. Check the Amp draw on each element for proper load. Check page 2 for rating information. If the amp draw is high or low, check the individual elements for opens, shorts and proper resistance. WITH POWER OFF: To check resistance of the elements, remove all leads from the elements and use a digital multimeter. The element resistance should be as follows: 120V – 87 ohms Replace heating element (shelf) as needed.

TROUBLESHOOTING GUIDE (CONT'D)

Display reads unusual characters		Make sure wires are connected properly (grounded).
		If wires are grounded properly, new control board is needed.
On/Off switch doesn't light (but unit works properly)	Power Switch	Check wiring to switch.

HEAT SHELF – REPLACEMENT

1. Disconnect power.
2. Take out screws holding "L Brackets" in cavity.
3. Disconnect thermocouple and all power connections to board. Mark all wires for reassembly.
4. Take out power board.
5. Take out shelf mounting screws from both sides.
6. Remove shelves and feed wiring out of unit.

WARNING: Be careful to avoid tearing the aluminum foil while working with wire connections.

7. Reassemble in reverse order.

USER INTERFACE (U.I.) BOARD – REPLACEMENT

1. Remove four (4) screws.
2. Disconnect thermocouples.
3. Disconnect ribbon cable.
4. Remove board.
5. Reassemble in reverse order.

When replacing U.I. board, be sure ribbon cable is connected so that blue wire is facing towards interior of unit.

PARTS BREAKDOWN

LABEL	PART NUMBER	PART DESCRIPTION
A	340040	Back Panel Assembly
B	340041	Side Panel
C	340042	Power Board Assembly
D	340043	Controller, User Interface
E	340038	Switch, Rocker, Lighted
F	10000949	Overlay, Control Panel
G	340045	Bracket, Heater Side
H	340046	Tray Seal
I	340011	Leg
J	340015	Tray, Plastic
K	340025	Tray Cover, Front Retention Rod, Assembly
L	10000968	Side Insulation
M	340048	Top / Bottom Insulation
N	10000966	Heater Insulation
O	10000946-02	Lower Shelf Assembly**
P	340051	Upper-Upper Shelf Assembly**
Q	340052	Lower-Upper Shelf Assembly**
R	340053	Rod, Rear Tray Seal Retainer
S	000171	Strain Relief
Not Shown	340054	Power Cord, NEMA 5-15P
Not Shown	340055	Ribbon Cable (Power Board to Interface)
Not Shown	340056	Cable (On / Off Switch to Power Board)
Not Shown	340017	Retention Rod Spring
Not Shown	340014	Retention Rod Spring Clip

GENERAL VIEW

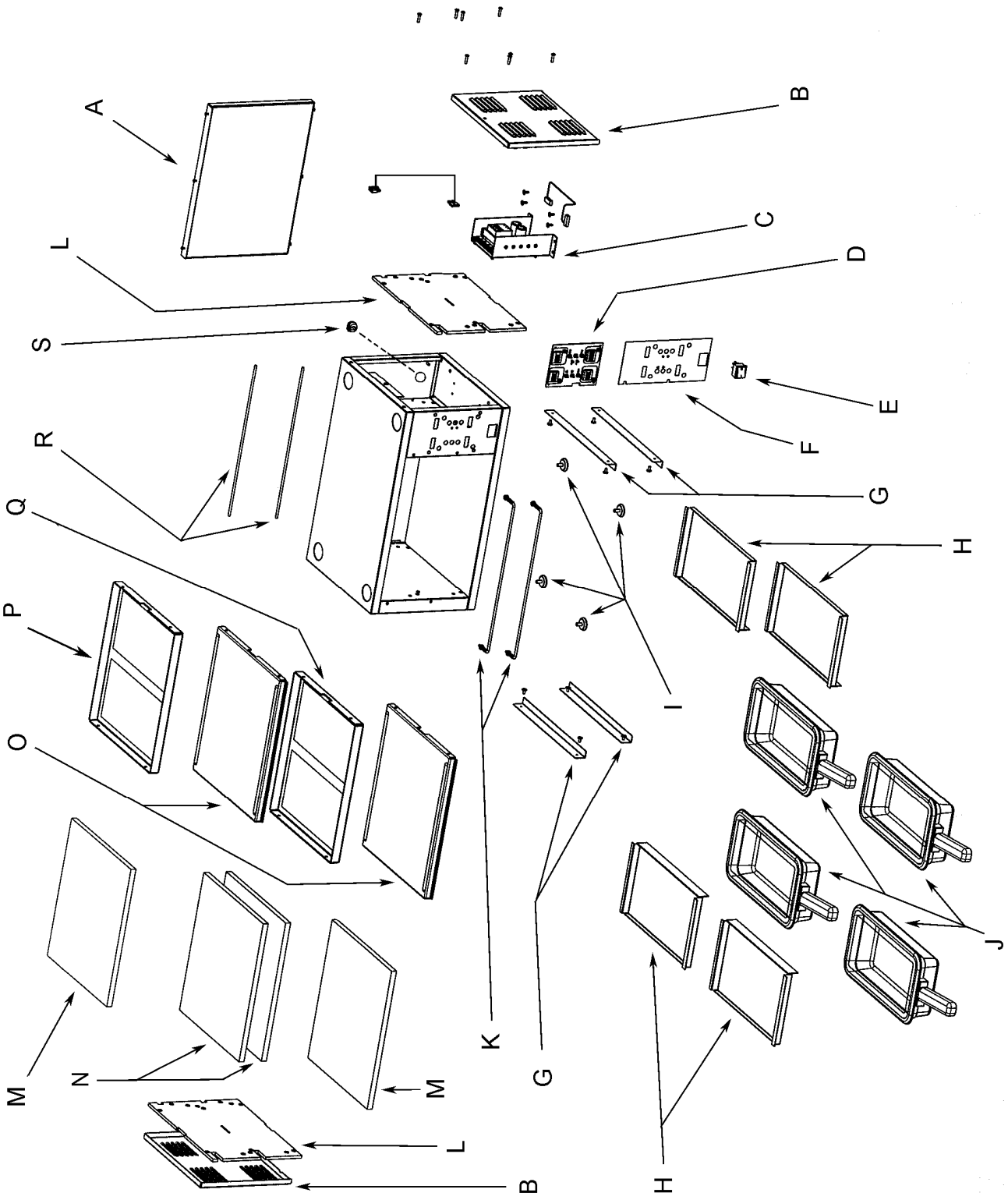

DIAGNOSTIC MODE

► Press and hold down the “Temperature” button until you hear a short, double-beep sound. In this mode all displays indicate temperatures for either the upper or lower heaters for each bin. Pressing the “Up” and “Down” arrow buttons will select the upper and lower heaters respectively.

In this mode, pressing the “Time” button will also display the PWM output power duty cycle. This is shown as a percent for the corresponding heater.

The thermocouple calibration system can only be accessed from within the diagnostic mode.

► THERMOCOUPLE CALIBRATION SYSTEM

Make sure heater zone to be calibrated is at temperature and stable. Measure actual temperature and proceed with following procedure.

Enter “Diagnostic Mode” by pressing and holding down the “Temperature” button. After a second or so, the actual temperatures as measured by holding cabinet are displayed.

Use “Up” or “Down” buttons to select either the upper or lower heating zone for each bin.

Press “Bin” select button to select bin containing heating zone to be calibrated.

Note: Bin display will alternate between showing temperature and calibration offset. As the calibration offset is changed the temperature displayed will reflect this.

Use the “Up” and “Down” buttons to make the displayed temperature match the actual temperature as independently measured.

To apply the temperature calibration correctly, press and hold the “Temperature” button down. While pressing the “Temperature” button, press “Program” button (for 1 second) until the unit beeps.

Once program in completed the temperature correction is applied and the heater zone will adjust its temperature. The user interface returns to the actual temperature display.

Once a bin is selected for programming, if no keys are entered for 10 seconds the calibration mode is terminated and the display returns to actual temperature display mode.

► THERMOCOUPLE FAULT DETECTION

The thermocouple (TC) fault detection logic is disabled for 10 minutes following initial power application. This allows time for all heating zones to develop enough heat to not trigger a shorted thermocouple fault.

► THERMOCOUPLE FAULT DETECTION (CONT"D)

If a fault is detected in any bin, the display for that bin will show "ErNN" where "NN" is a numeric error code. This two digit error code uses the first digit for the upper heater zone. If a short is detected, the digit will be a "1", if an open is detected a "2" will be displayed. If the heater zone is operating properly, a "0" will be displayed.

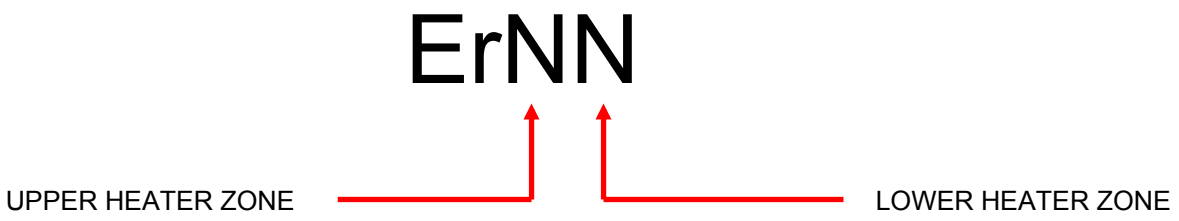

Some Examples:

Er01	Indicates	Upper heater zone is good. Lower heater zone TC short detected.
Er02	Indicates	Upper heater zone is good. Lower heater zone TC open detected.
Er10	Indicates	Upper heater zone TC short detected. Lower heater zone is good.
Er20	Indicates	Upper heater zone TC open detected. Lower heater zone is good.
Er22	Indicates	Upper and Lower heater zone TC's detected open.
Cold	Indicates	Temperature of heater zone is below set point.
Hot	Indicates	Temperature of heater zone is above set point.

Once and error is indicated for a heater zone the affected heater is shut off.

The only way to clear an error indication is by cycling the power off then on again.

► To reset the holding bin controller to the factory configuration, hold down the upper-left "Bin" button while powering on the controller. Release the "Bin" button as soon as the displays illuminate. This resets the following settings:

- All product names
- Upper and lower temperature for each product
- "Expiration" and "Cook More" time for each product

NOTE: For additional information concerning Menu and Product programming, please refer to Merco Holding Cabinet Installation & Operation Manual.

https://web.archive.org/web/20120507000445/http://www.mercoproducts.com/docs/uploaded/msy/products/holdingcabinet/merco_mhc-22_spec_1571.pdf

Holding Cabinet

Model:

☐ MHC-22-GEN

Standard Features:

- Conduction heat.
- Independent upper and lower heating system.
- Cool touch insulation.
- Small footprint.
- Stainless steel construction.
- Digital display for each bin.
- 6-hour timer with Audible Alarm.
- Programmable menu.
- Individual heat zone for each bin.

Description:

Merco Holding Cabinet keeps food hot, fresh and ready for easy assembly! Allows more flexibility in holding options for greater menu variety - go ahead, prepare and hold food prior to serving. The easy to maintain design and simple operation features reduced employee time spent on cleaning and training; increasing customer satisfaction by providing higher product quality (a great sandwich) in a shorter amount of time (increased speed.)

Bid Specifications for Holding Cabinets:

The Holding Cabinet shall be Merco model _____ rated at ____watts, _____volts, single phase AC.

Specifications:

Conduction Heat – directly transfers heat from both top & bottom with minimal heat loss. Provides consistent quality, improved freshness and extended hold times.

Cool Touch Insulation – keeps exterior surfaces cool while food is held at proper serving temps.

Small Footprint – allows cabinet to fit in small operations.

Stackable – allows operators to customize and use in larger operations.

Stainless Steel Construction – sturdy, sanitary & reliable.

Pre-Attached Stainless Steel Covers - sealed bins to prevent moisture loss. Removable for cleaning.

Programmable Menu – easy to use symbols on control panel. Digital time, temp and product display for each individual bin with 6-Hour timer and audible alarm.

Each cavity holds two 1/3 size poly-carbonate bins for total of 4 bins and menu options.

Electrical Requirements:

Model is available in 120 Volt; 60 Hz, 1250 Watts at 10.4 Amps. NEMA 5-15P plug included.

LISTED c UL us 884B

CLASSIFIED UL EPH ANSI / NSF4

1111 North Hadley Road
P.O. Box 1229
Fort Wayne, Indiana 46801-1229

Tel 1.260.459.8200
Fax 1.260.459.8240
Toll Free 1.888.417.5462
E mail info@mercosavory.com

www.mercosavory.com

Enodis

Merco

Holding Cabinet

Dimensions:
(inches/mm)

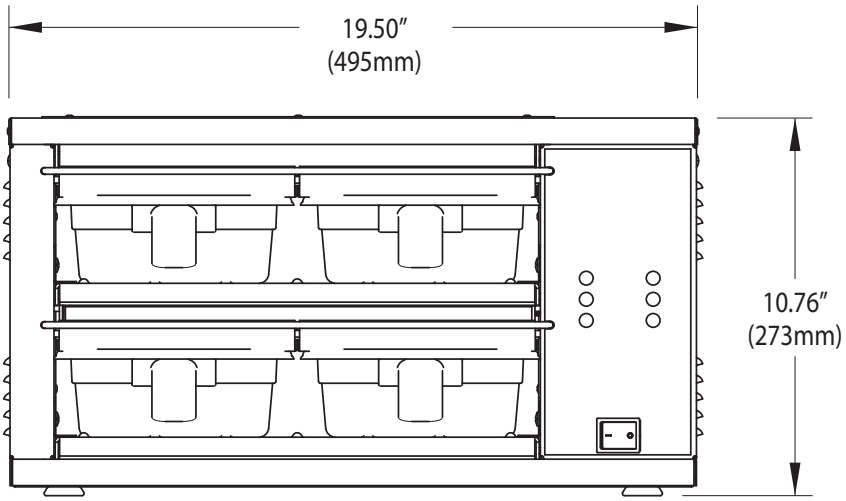

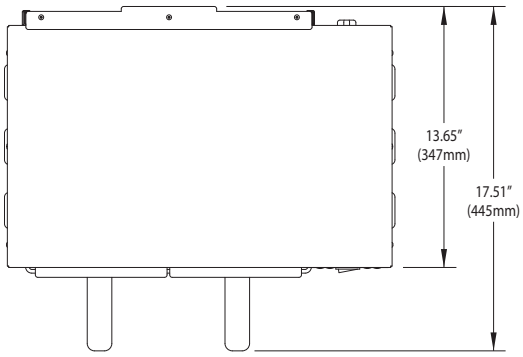

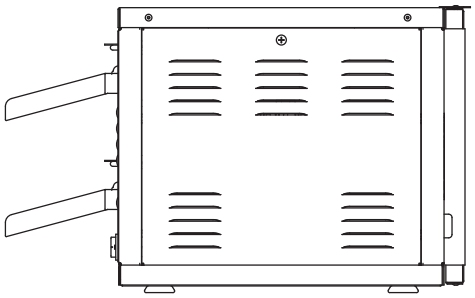

Merco Guarantee

Merco® equipment is guaranteed to be free from quality problems in materials and workmanship for a period of one (1) year parts and labor from date of purchase, or eighteen (18) months from date of shipment from factory, whichever comes first.

Part Number	Model	Voltage	Hz	Watts	Amps	Width inch/mm	Depth inch/mm	Height inch/mm	Net Wt. lbs/kg	Ship Wt. lbs/kg
86002	MHC-22-GEN	120	60	1250	10.4	19.5/495	13.65/347	10.76/273	30/14	35/16

Designs and specifications subject to change without notice.

Models: ☐ MHC-22-GEN

1111 North Hadley Road
P.O. Box 1229
Fort Wayne, Indiana 46801-1229

Tel 1.260.459.8200
Fax 1.260.459.8240
Toll Free 1.888.417.5462
E mail info@mercosavory.com

©2007 Merco Savory Products, Inc.

Printed in the U.S.A.
1571-2.5M-10/07-SP

Enodis