US 20090126580A1

(19) United States

(12) Patent Application Publication

Hartfelder et al.

(10) Pub. No.: US 2009/0126580 A1

(43) Pub. Date: May 21, 2009

(54) REMOVABLE DIVIDER FOR FOOD WARMING APPARATUS

(75) Inventors: **Charles Hartfelder**, Carol Stream, IL (US); **Loren J. Veltrop**, Chicago, IL (US); **Richard L. Thorne**, Elgin, IL (US); **Jack Guasta**, Glendale Heights, IL (US)

Correspondence Address:
MCDONNELL BOEHNEN HULBERT & BERGHOFF LLP
300 S. WACKER DRIVE, 32ND FLOOR
CHICAGO, IL 60606 (US)

(73) Assignee: **PRINCE CASTLE, INC.**, Carol Stream, IL (US)

(21) Appl. No.: **11/941,040**

(22) Filed: **Nov. 15, 2007**

Publication Classification

(51) **Int. Cl.**
A47J 36/24 (2006.01)

(52) **U.S. Cl.** **99/483**

(57) **ABSTRACT**

A food warming apparatus includes a cabinet with one or more heating compartments for holding one or more trays. Each tray has a rim extending outwardly from a tray opening and may contain previously cooked food portions. One or more dividers are removably mounted inside a heating compartment, dividing the heating compartment into a first sub-compartment and second sub-compartment. The one or more dividers include a first support flange that extends into the first sub-compartment and a second support flange that extends into the second sub-compartment. The first support flange supports a rim of a first tray in the first sub-compartment such that the first tray is suspended above a lower compartment surface of the heating compartment. The second support flange supports a rim of a second tray in the second sub-compartment such that the second tray is suspended above the lower compartment surface of the heating compartment.

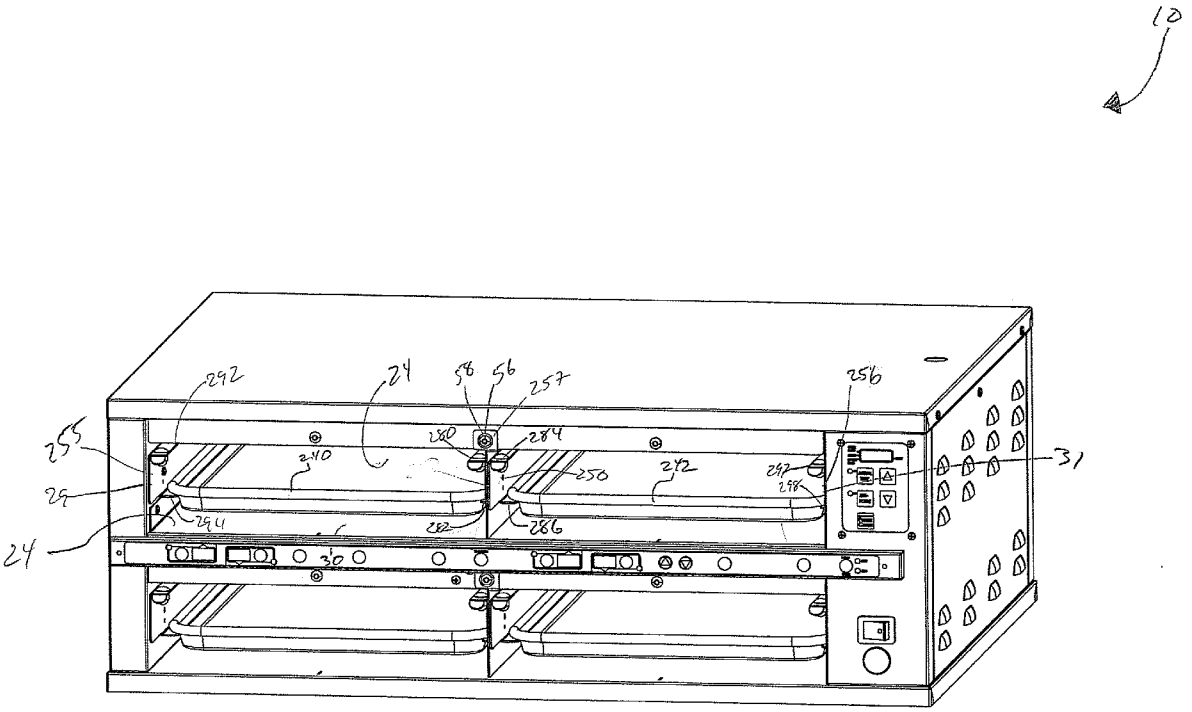

Duke Manufacturing Co. EX1013
U.S. Patent No. 10,492,641

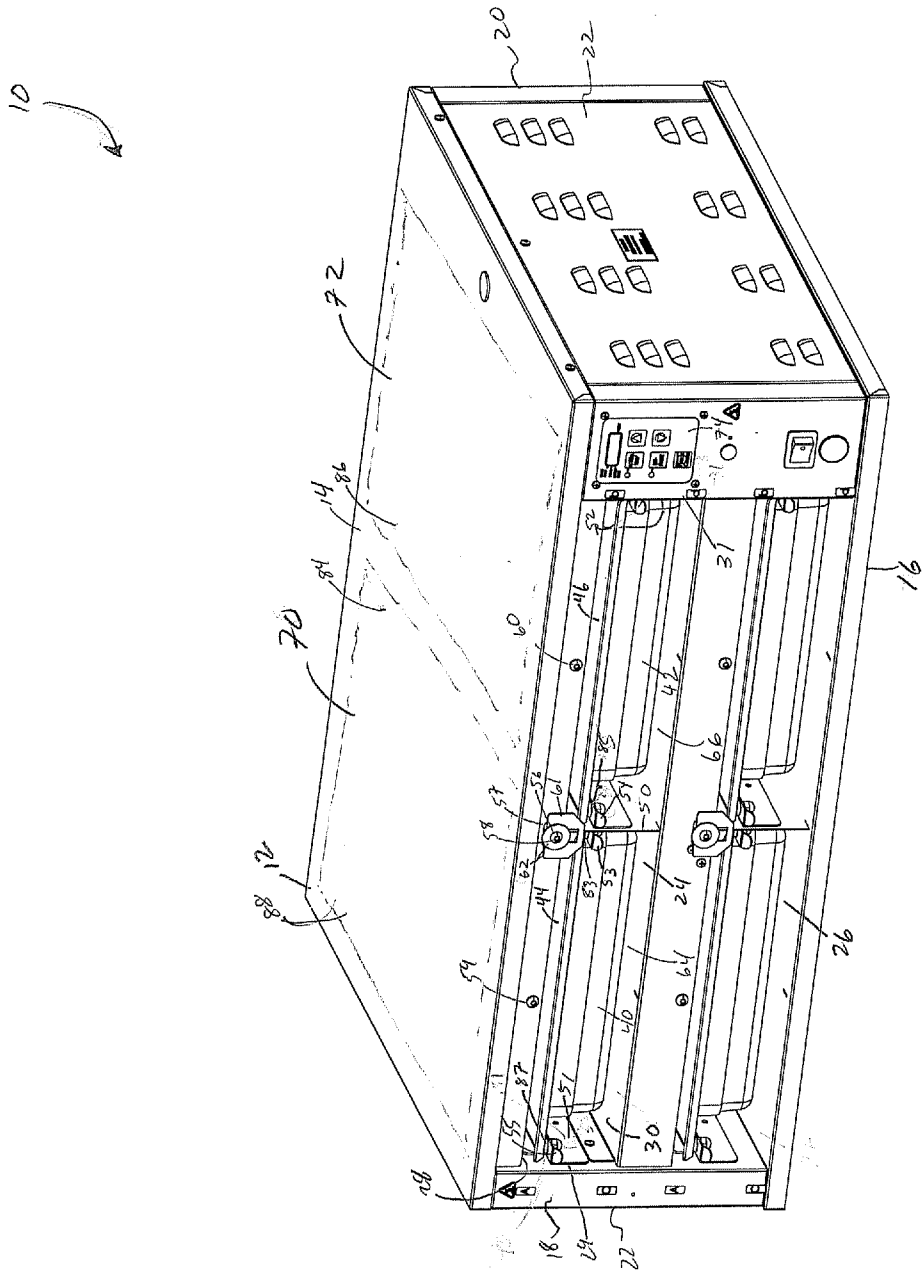

FIGURE 1

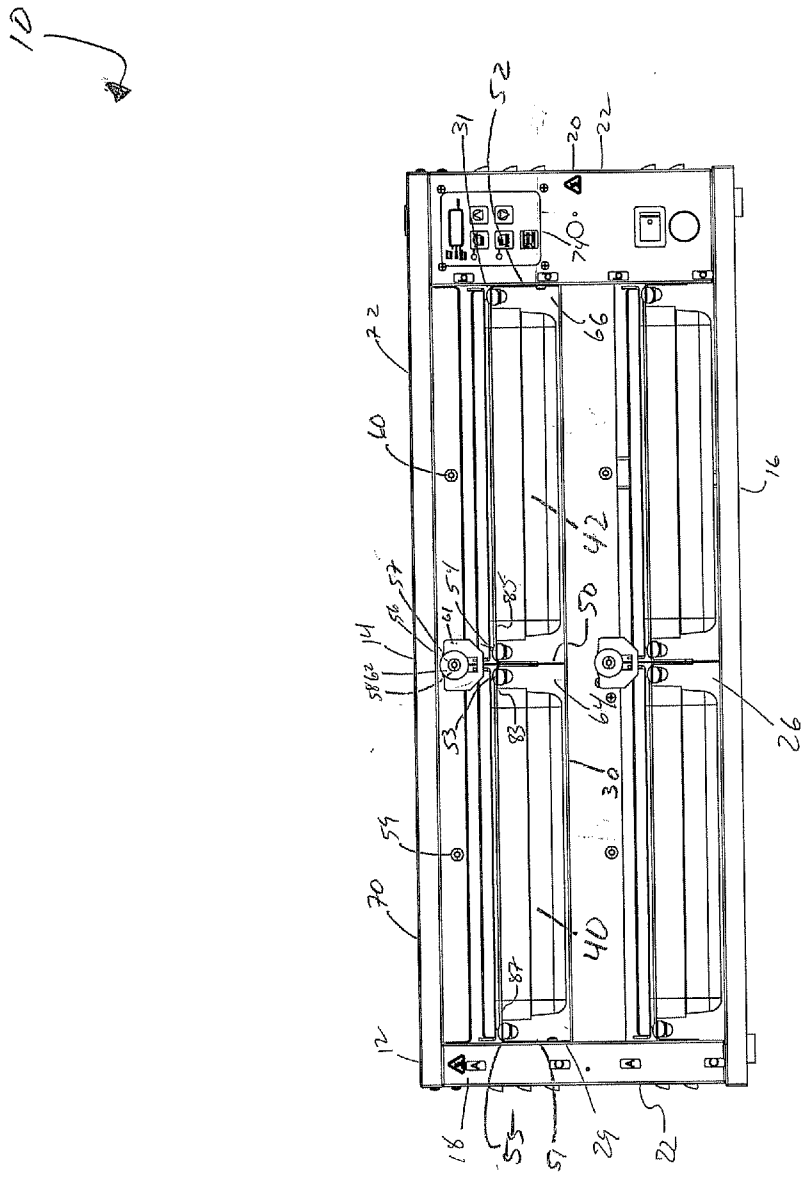
10
12
14
16
18
20
22
26
29
30
31
40
42
50
52
53
54
55
56
57
58
59
60
61
64
66
70
72
83
85
87

FIGURE 2

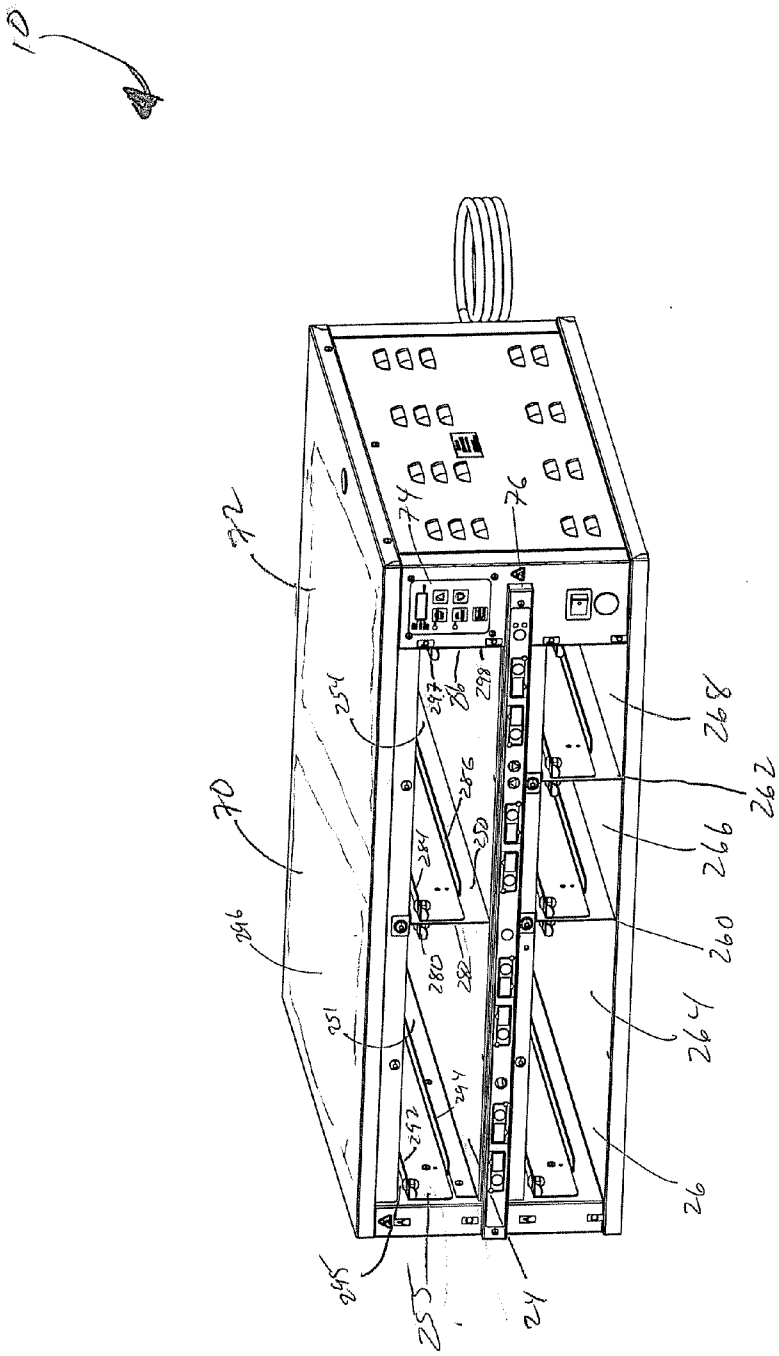
10
72
74
76
70
254
297
286
298
268
262
266
260
264
26
296
251
284
280
282
250
294
292
295
255
24

FIGURE 3

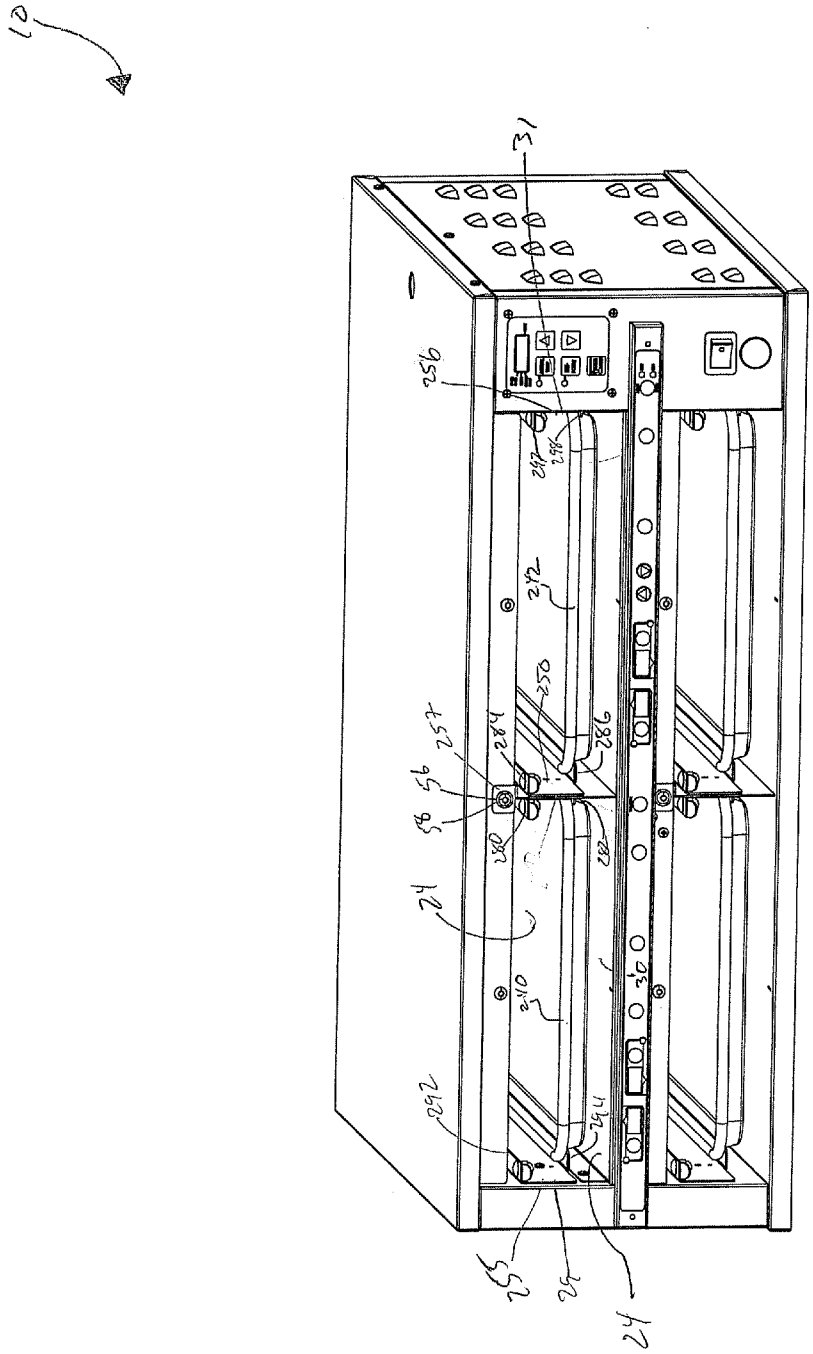
10
31
256
292
298
242
250
284
286
257
56
58
280
282
24
240
30
292
294
255
25
24

FIGURE 4

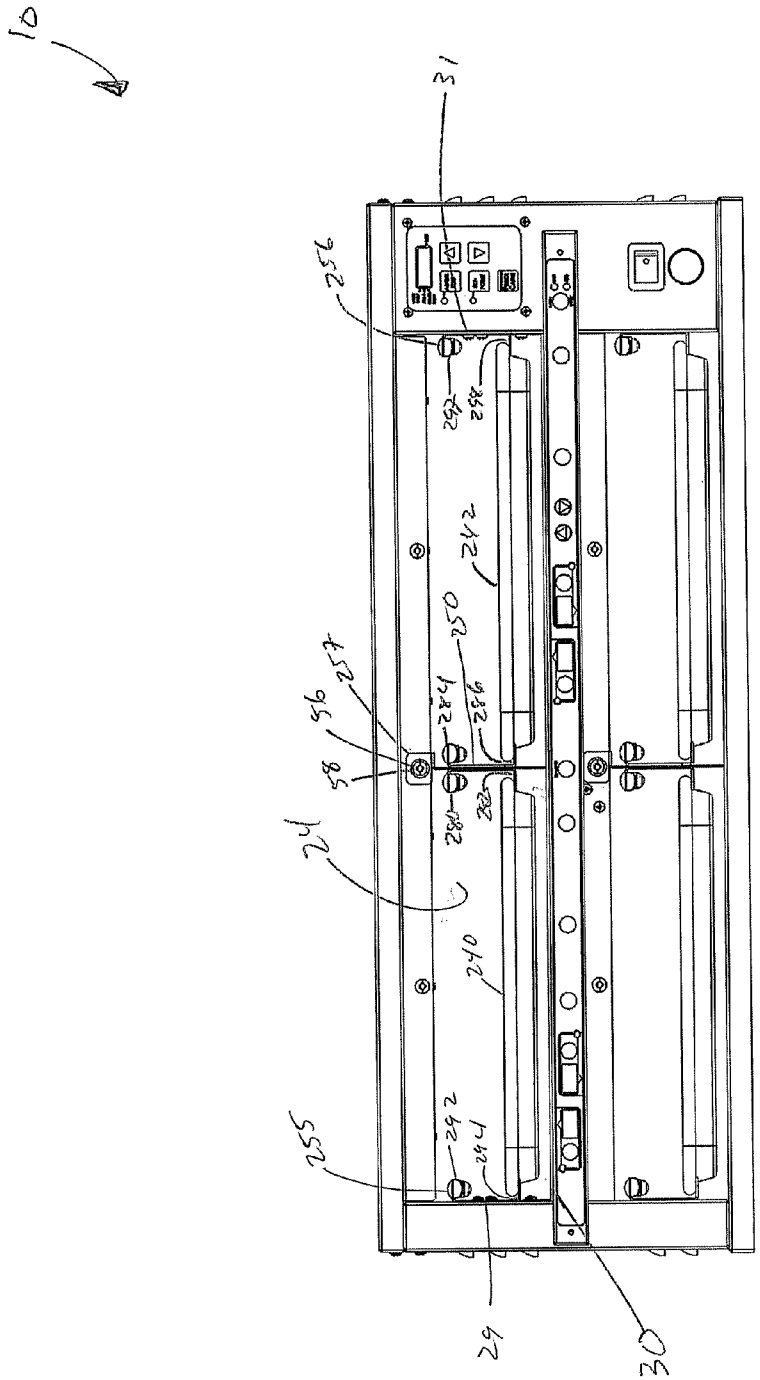
10
31
256
292
298
242
250
257
56
58
284
286
280
282
24
240
255
292
294
29
30

FIGURE 5

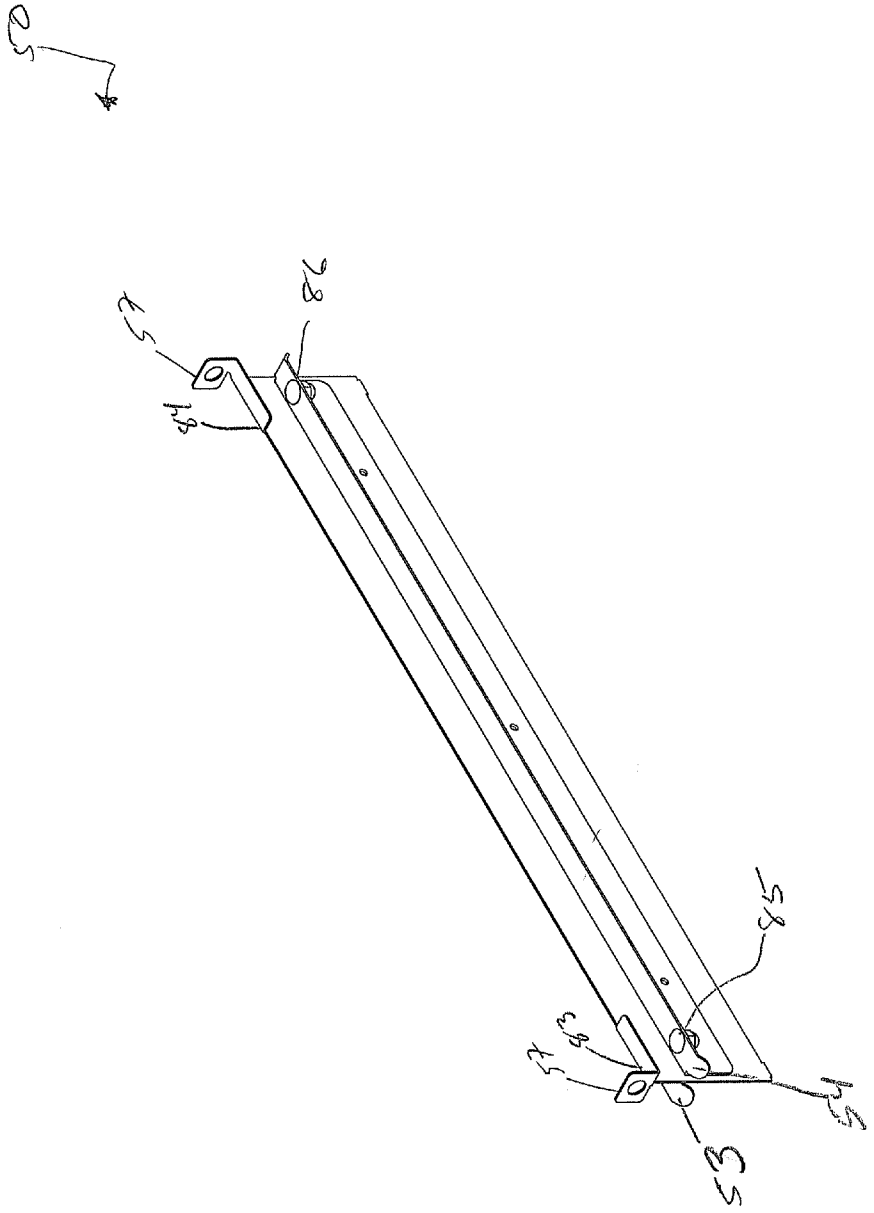

FIGURE 6

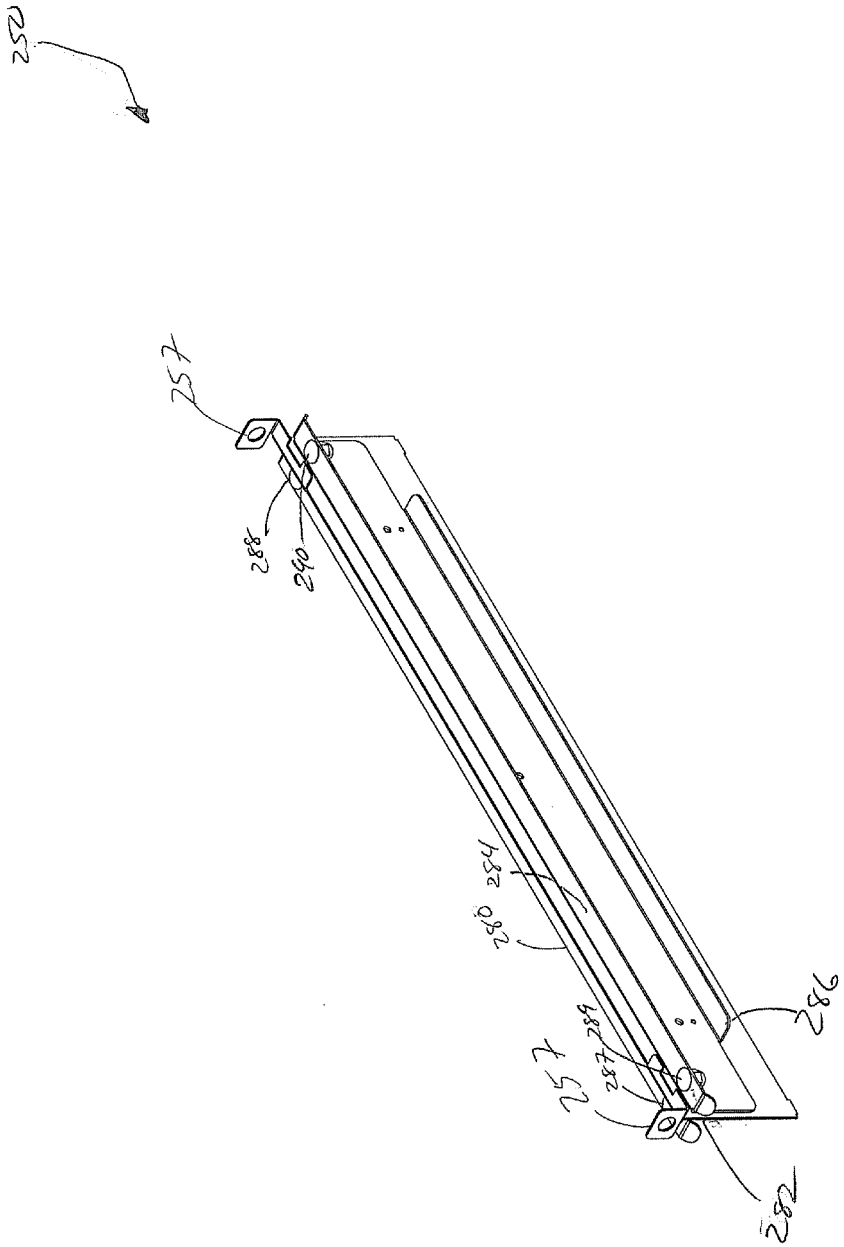

FIG 4B 7

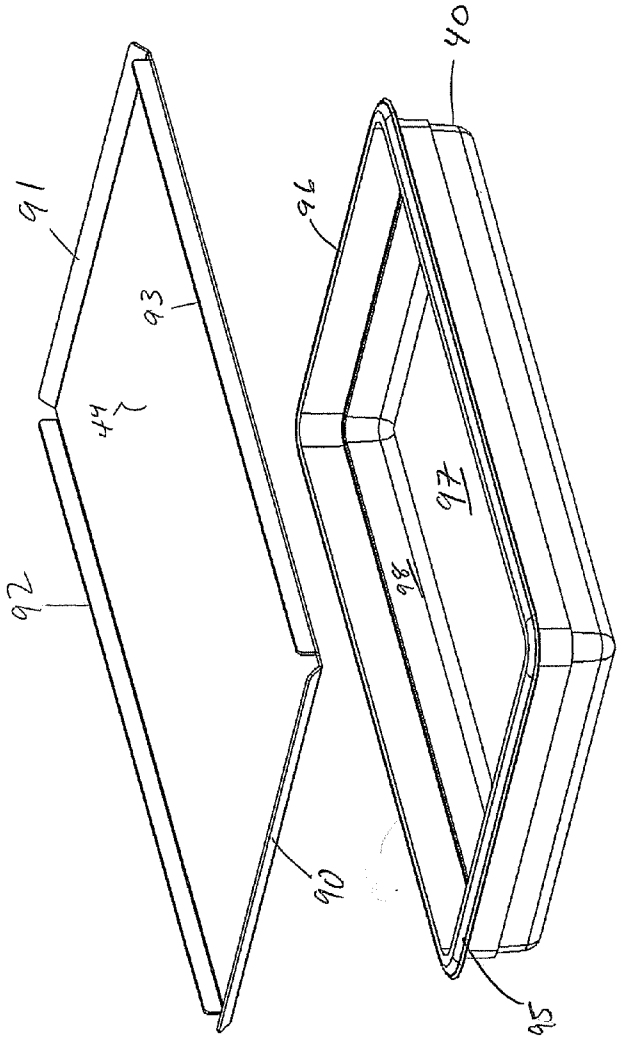

FIGURE 8

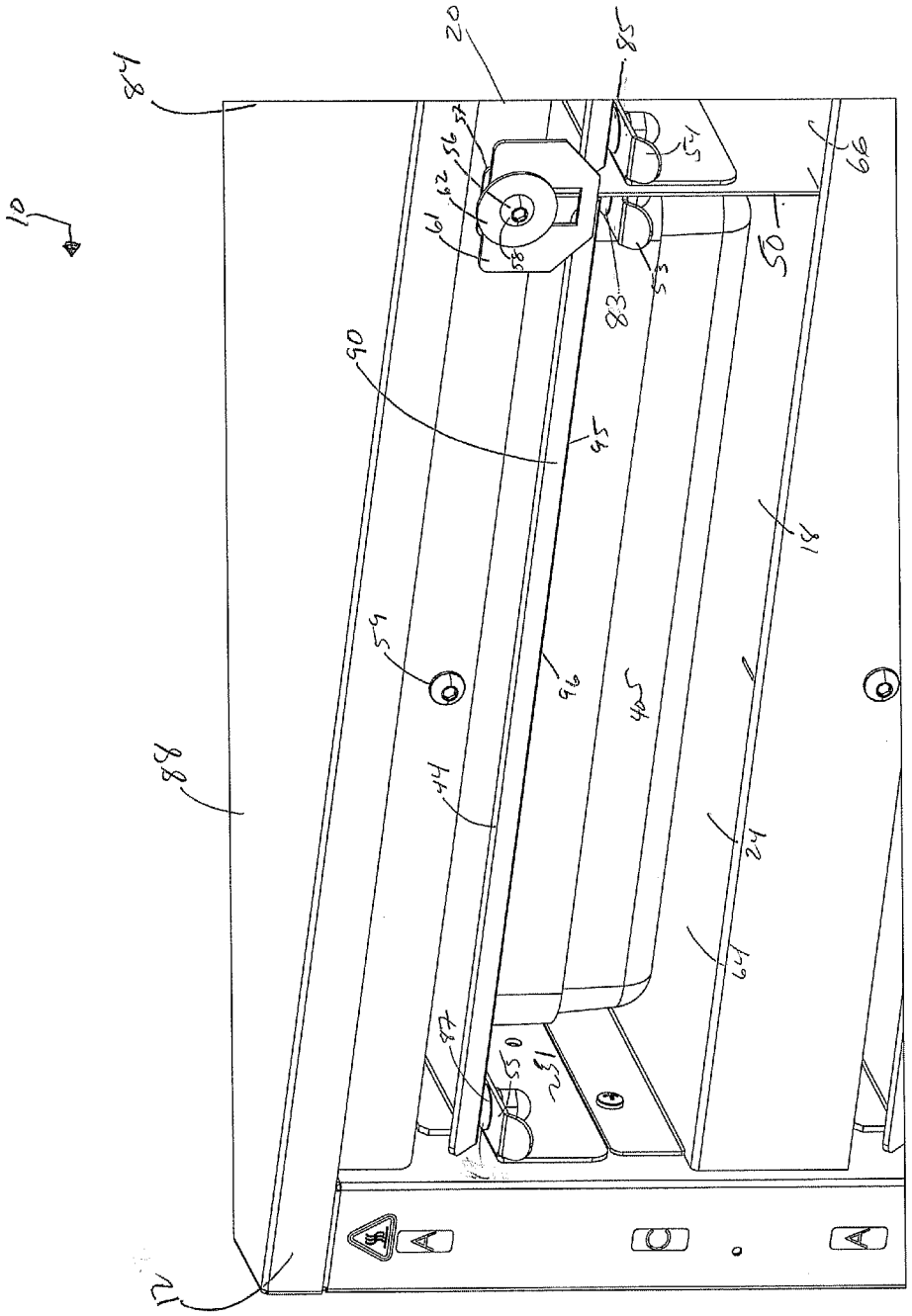
10
84
20
85
54
66
57
56
62
61
58
83
53
50
90
95
18
59
96
405
88
44
24
64
87
550
251
12

FIGURE 9

REMOVABLE DIVIDER FOR FOOD WARMING APPARATUS

BACKGROUND OF THE INVENTION

[0001] 1. Field of the Invention

[0002] This invention relates to the field of food preparation. More particularly, this invention relates to an apparatus and method for maintaining food in a ready to use condition in which previously cooked food portions are contained in trays stored within a food warming apparatus divided into sub-compartments with a removable divider.

[0003] 2. Description of Related Art

[0004] In many establishments, such as fast food restaurants, certain food items are cooked well in advance of when they are ordered by or served to the customer. Examples of such food items can include sandwich fillings, such as cooked eggs, hamburger patties, breaded foods, such as chicken nuggets, or balked goods, such as muffins. These previously cooked food portions are often maintained in a ready-to-use condition until they served to the customer. This typically involves maintaining the previously cooked food portions at a serving temperature in the range of from about 140° F. to about 200° F., depending on the food item.

[0005] Various food warming apparatus have been developed to maintain previously cooked food portions at a desired serving temperature. Such food warming apparatus are sometimes referred to as staging cabinets, holding cabinets, or warming cabinets. Some of the challenges involved in designing a food warming apparatus involve increasing the safety of the apparatus and reducing spillage while maintaining a speedy workflow within the restaurant. The challenge can be particularly great when trays of different sizes (e.g. heights and/or widths) are used to hold previously cooked food portions.

[0006] One commonly used way to protect previously cooked food items for which drying out is a concern, is to place the food items in a container, such as a tray, and to provide a cover for the container. The cover restricts evaporation of moisture from the previously cooked food items. With a reduced amount of moisture vapor being able to escape from the covered container, the previously cooked food items contained therein do not dry out as rapidly.

[0007] Conventional covers are inconvenient to use in food fast restaurants and similar establishments. This is because when previously cooked food portions are taken from the food warming apparatus, the cover typically must be removed from the tray to gain access to the food items contained therein, and must be replaced to protect the remaining food portions contained in the tray. The steps of removing and replacing a cover can take an amount of time that is unacceptably large in fast food restaurants. The removed cover can also become misplaced or contaminated and can get in the way of other activities in the kitchen area.

SUMMARY

[0008] In a first principal aspect, an exemplary embodiment provides a food warming apparatus for maintaining previously cooked food portions contained in a plurality of trays in a ready-to-use condition. The plurality of trays include a first tray and a second tray. The first tray has a first rim extending outwardly from a first tray opening. The second tray has a second rim extending outwardly from a second tray opening. The food warming apparatus comprises a cabinet with at least one heating compartment therein. The at least one heating compartment has an upper compartment surface, a lower compartment surface, a first side-wall, and a second side-wall. At least one divider is removably mounted in the at least one heating compartment. The at least one divider divides the at least one heating compartment into at least a first sub-compartment and a second sub-compartment. A first support flange is disposed on the at least one divider for supporting the first rim of the first tray in the first sub-compartment such that the first tray is suspended above the lower compartment surface. A second support flange is disposed on the at least one divider for supporting the second rim of the second tray in the second sub-compartment such that the second tray is suspended above the lower compartment surface.

[0009] In a second principal aspect, an exemplary embodiment provides a method for using a plurality of trays in a food warming apparatus. The plurality of trays include a first tray and a second tray. The first tray has a first rim extending outwardly from a first tray opening. The second tray has a second rim extending outwardly from a second tray opening. The food warming apparatus comprises a cabinet with at least one heating compartment therein. The at least one heating compartment has an upper compartment surface and a lower compartment surface. In accordance with the method, a divider is removably mounted inside the heating compartment such that the heating compartment is divided into at least a first sub-compartment and a second sub-compartment. The divider includes a first support flange that extends into the first sub-compartment and a second support flange that extends into the second sub-compartment. A first tray is inserted into the first sub-compartment such that the first rim is supported by the first support flange and the first tray is suspended above the lower compartment surface. A second tray is inserted into the second sub-compartment such that the second rim is supported by the second support flange and the second tray is suspended above the lower compartment surface.

BRIEF DESCRIPTION OF THE DRAWINGS

[0010] FIG. **1** is an isometric view of a food warming apparatus with one single-level divider installed in each heating compartment and a tray supported within each sub-compartment, in accordance with an exemplary embodiment.

[0011] FIG. **2** is a front view of a food warming apparatus with one single-level divider installed in each heating compartment and a tray supported within each sub-compartment, in accordance with an exemplary embodiment.

[0012] FIG. **3** is an isometric view of a food warming apparatus without trays with one multi-level divider installed in the upper heating compartment and two multi-level dividers installed in the lower heating compartment, in accordance with an exemplary embodiment.

[0013] FIG. **4** is an isometric view of a food warming apparatus with one multi-level divider installed in each heating compartment and a shallow tray supported within each sub-compartment, in accordance with an exemplary embodiment.

[0014] FIG. **5** is a front view of a food warming apparatus with one multi-level divider installed in each heating compartment and a shallow tray supported within each sub-compartment, in accordance with an exemplary embodiment.

[0015] FIG. **6** is an isometric view of a single-level divider, in accordance with an exemplary embodiment.

[0016] FIG. **7** is an isometric view of a multi-level divider, in accordance with an exemplary embodiment.

[0017] FIG. **8** is an isometric view of one tray and one cover, in accordance with an exemplary embodiment.

[0018] FIG. **9** is an isometric view of one tray and one cover within a food warming apparatus, in accordance with an exemplary embodiment.

DETAILED DESCRIPTION OF EXEMPLARY EMBODIMENTS

1. Overview

[0019] A food warming apparatus is able to maintain previously cooked food portions in a ready-to-use condition. A food warming apparatus may have a cabinet that has one or more heating compartments therein. The previously cooked food portions may be placed in one or more open-top containers, which are referred to herein as "trays." The trays containing the previously cooked food portions may be placed in the heating compartments to maintain the portions at a desired temperature.

[0020] The trays used with a food warming apparatus may be of different sizes with varying heights, widths, and/or lengths. For example, a heating compartment may hold a tray whose height is nearly that of the heating compartment. Alternatively, a heating compartment may hold a "shallow tray" whose height is much less than that of the heating compartment. Although the sizes of trays may differ, each tray preferably has an open top, i.e., a "tray opening," and a rim that extends outwardly from the tray opening.

[0021] One or more dividers may be removably mounted in a heating compartment to divide the heating compartment into sub-compartments. The cabinet may be configured with one or more fixed mounting points to permit dividers to be removably mounted in different positions in a heating compartment. In this way, the dividers may be used to define sub-compartments of varying widths. For example, a heating compartment may have two, unequally sized sub-compartments to hold trays of different widths in the same heating compartment.

[0022] A divider may have one or more support flanges to support trays above the lower surface of the heating compartment. A divider could be a "single-level divider" with one support flange per side of the divider. Alternatively, a divider could be a "multi-level divider" that has more than one support flange per side of the divider. Thus, a multi-level divider may be capable of supporting trays of different heights in a sub-compartment.

[0023] A tray containing previously cooked food portions may be placed in the heating compartment by inserting it into a sub-compartment defined by one or more dividers. One or more support flanges on the one or more dividers may support the rim of the tray so that the tray is suspended above the lower compartment surface. One or more complementary support flanges may support the rim of the tray in cooperation with the support flanges. For example, a support flange on a divider may support the rim on one side of the tray opening and a complementary support flange may support the rim on the opposite side of the tray opening. The complementary support flange could be disposed on another divider. Alternatively, the complementary support flange could be disposed on a side-wall of the heating compartment or disposed in the heating compartment in some other manner. A complementary support flange could be disposed on either a "single-level" or "multi-level" complementary support.

[0024] The tray may be inserted into the sub-compartment until it reaches an internal position, for example, a position where the tray is centered or nearly centered within the heating compartment. The internal position may be defined by the positions of one or more protrusions on a support flange and/or one or more protrusions on a complementary support flange. For example, as a user of the food warming apparatus inserts a tray into a sub-compartment defined by one or more dividers, the rim of the tray may encounter a first protrusion on a support flange and a first protrusion on a complementary support flange, thereby increasing the force required to move the tray. The user may continue to insert the tray beyond this point until the rim clears the first protrusions, which the user may sense as a decrease in the force required to move the tray. However, with additional insertion, the rim may encounter a second protrusion on the support flange and a second protrusion on the complementary support flange, thereby again increasing the force required to move the tray. Thus, the user may sense the internal position as a preferred position in which the rim is between the first protrusions and the second protrusions.

[0025] The support flanges of the divider, the complementary support flanges of the complementary support, or the support flanges in cooperation with the complementary support flanges, may also support a cover for the tray. The cover may at least partially block the tray opening to restrict evaporation of liquid from previously cooked food portions contained in the tray. The cover may be fashioned with one or more turned-up edges. The one or more turned-up edges may function as engagement edges that engage a stop member mounted on the cabinet to retain the cover within the heating compartment.

[0026] When a tray is fully inserted into the sub-compartment, the tray may come to rest in the internal position. While being inserted, the tray may lift the cover from a resting position on the one or more support flanges and/or the one or more complementary support flanges to a position where the cover is supported on the rim of the tray. When the tray is withdrawn from a sub-compartment, the cover may move along with the tray. However, the one or more stop members may engage the one or more engagement edges of the cover, thereby asserting the motion of the cover and ensuring the cover stays within the sub-compartment.

[0027] Configuring the covers so that they stay in the heating compartment can provide benefits for establishments such as fast food restaurants. In particular, a tray containing previously cooked food portions may be inserted into the heating compartment and covered in one step, and the tray may be withdrawn from the heating compartment and uncovered in one step, thereby saving time. In addition, the inconvenience and the possibilities of contamination associated with direct handling of covers can be reduced.

2. Exemplary Food Warming Apparatus

[0028] With reference to FIG. **1**, an exemplary food warming apparatus **10** includes a housing or cabinet **12** that has a top **14**, a bottom **16**, a front **18**, a back **20**, and sides **22**. The interior of cabinet **12** is divided into heating compartments **24** and **26**. Although FIG. **1** shows exemplary food warming apparatus **10** with two heating compartments, it is to be understood that a food warming apparatus could be provided with a greater or fewer number of heating compartments.

[0029] In the example shown in FIG. **1**, front **18** is open to provide access to heating compartments **24** and **26**. However,

it is to be understood that back **20** could also be open to provide access to heating compartments **24** and **26**; for example, in a pass-through configuration. Each of heating compartments **24** and **26** includes an upper compartment surface, a lower compartment surface, and first and second side-walls. Thus, heating compartment **24** includes upper compartment surface **28**, first side-wall **29**, lower compartment surface **30**, and second side-wall **31**, as shown in FIG. **1**. Compartment **26** may be similarly configured.

[0030] Each of heating compartments **24** and **26** is sized to accommodate a plurality of trays, as exemplified in FIG. **1** by trays **40** and **42** in heating compartment **24**. Each of trays **40** and **42** are covered by covers **44** and **46**, respectively. Although FIG. **1** shows two trays in each compartment, it is to be understood that the compartments may be sized to accommodate a greater or fewer number of trays. In addition, although FIG. **1** shows each compartment filled with its maximum number of trays, it is to be understood that a compartment might hold less than the maximum number of trays at any given time.

[0031] Trays may be supported in a variety of ways. Trays may be supported by a support structure such as a divider and a complementary support. For example, FIG. **1** shows tray **40** in heating compartment **24** supported by a divider **50** and a complementary support **51** and tray **42** in heating compartment **24** supported by divider **50** and complementary support **52**. A single-level divider may have one or more support flanges, with one support flange per side of the divider. Single-level divider **50** is illustrated in FIG. **1** with first support flange **53** and second support flange **54**, with first support flange **53** on the left side of divider **50**, and second support flange **54** on the right side of single-level divider **50**. A complementary support may have one or more complementary support flanges. FIG. **1** shows complementary support **51** with a complementary support flange **55**.

[0032] A support flange of a divider may support a tray so it is suspended above the lower compartment surface. A complementary support flange of a complementary support may support a tray in this way in cooperation with the support flange on a divider. As best seen in FIG. **2**, tray **40** is suspended above lower compartment surface **30** by first support flange **53** on single-level divider **50** and complementary support flange **55** on complementary support **52**. FIG. **2** also shows tray **42** supported above lower compartment surface **30** by second support flange **54** of single-level divider **40** and by a complementary support flange on complementary support **52**. Alternatively, a tray may also be supported from below by resting on a support structure, such as a rack, or by resting on the lower compartment surface.

[0033] Complementary supports and dividers may be mounted inside the heating compartment in various ways. A complementary support may be mounted on the upper compartment surface, the lower compartment surface, or a side of the heating compartment. FIG. **1** shows complementary support **51** mounted on first side-wall **29** of heating compartment **24** and complementary support **52** mounted on second side-wall **31** of heating compartment **24**.

[0034] The cabinet may be configured with one or more fixed mounting points. As best seen in FIGS. **1** and **2**, cabinet **12** is configured with fixed mounting points **58**, **59**, and **60**, although it may be appreciated that a greater or smaller number of mounting points may be used. The divider may be removably mounted in the heating compartment in various ways. A divider could be removably mounted using a mounting fastener, such as a bolt, screw or other fastener, passing through both a mount on the divider and through a hole at one or more fixed mounting points on the cabinet. As best illustrated in FIG. **6**, divider **50** has two mounts **57** that receive a mounting fastener. Alternatively, a divider may be removably mounted to either of the lower or upper compartment surfaces.

[0035] In the example best illustrated in FIG. **9**, divider **50** is mounted inside heating compartment **24** by passing mounting fastener **56** through both mount **57** of divider **50** and a hole at fixed mounting point **58** in cabinet **12** and then by securing mounting fastener **56** to cabinet **12**. A stop member may also be removably mounted at one or more fixed mounting points on the cabinet. Either the stop member or the mount of the divider may protected by a washer, gasket or similar protecting device. As best seen in FIG. **9**, stop member **61** is mounted at fixed mounting point **58** and is protected by washer **62**.

[0036] The cabinet could be fashioned with a mounting protrusion for hanging the mount on the divider without use of a fixed mounting member. As another alternative, a divider may be removably mounted in an adjustable fashion, such as by being mounted using a mounting member in a similar fashion as described above, except that the fixed mounting point would be replaced with a slot, slit, groove, or any similar opening allowing the divider to be mounted at any position along the slot by passing a mounting member through both the mount in the divider and the slot and temporarily affix the mounting member to the cabinet.

[0037] Each of heating compartments **24** and **26** may be heated by a respective heating system. In an exemplary embodiment, each heating system includes one or more resistive heaters for heating its respective compartment from above and/or from below. For example, FIG. **1** shows heating compartment **24** may be heated through upper compartment surface **28** by heater plates **70** and **72**, which may be positioned over trays **40** and **42**, respectively. Heating compartment **24** may also be heated through lower compartment surface **30** by similar heater plates. Heating compartment **26** may be heated in a similar manner.

[0038] Food warming apparatus **10** may include various controls for enabling an operator to control its operation and various indicators for displaying information to the operator. Some of the controls and indicators may be arranged in a control panel **74** disposed on front **18**. Control panel **74** may enable the operator to select setpoint temperatures for the compartment (or for specific trays in the compartments). A control system in food warming apparatus **10** may control the heating systems for the compartments (e.g., thermostatically) to achieve and maintain the setpoint temperatures. In an exemplary embodiment, the control system may measure the temperature at the heating system (e.g., at heater plate **70** or **72**), so that the setpoint temperature corresponds to the temperature at the heating system. The temperature of the food inside of the covered tray in the compartment may be lower than the setpoint temperature. For example, it may be desirable to maintain previously cooked food portions at a temperature that may range from about 140° F. to about 200° F. To achieve this food temperature, the setpoint temperature may need to be as high as 400° F.

[0039] Other controls and indicators may be arranged in on interface bar **76**, as shown in FIG. **3**. Interface bar **76** may each enable an operator to select a hold time for the respective compartment (or for a specific tray in the compartment) based, for example, on the particular food product contained

in the compartment (or contained in a specific tray in the compartment). The operator may select the hold time by scrolling through a list of food products, each of which has been associated with a preset hold time. A display on the interface bar may display descriptions of the food products as the operator scrolls through the list and may then display a description of the selected food product.

[0040] When the selected food product is placed in the compartment, the operator may interact with the compartment's interface bar to start a timer. When the hold time has been reached, the compartment's interface bar may provide an indication to the operator. The operator may then replace the food product with fresh food product and interact with the interface bar to re-set the timer.

[0041] One or more dividers removably mounted in a heating compartment may separate a heating compartment into sub-compartments. For example, one divider may divide or separate a heating compartment into two sub-compartments. FIG. **3** shows divider **250** removably mounted in heating compartment **24**, dividing heating compartment **24** into a first sub-compartment **251** and a second sub-compartment **254**. More generally, if a number N of dividers are removably mounted within a heating compartment, then the N dividers divide the heating compartment into N+1 sub-compartments. FIG. **3** also shows two dividers **260** and **262** removably mounted in heating compartment **26** dividing heating compartment **26** into three sub-compartments **264**, **266**, and **268**. The sub-compartments may be of equal or unequal sizes. FIG. **3** shows equally sized sub-compartments **251** and **254** and shows sub-compartment **264** as wider than either sub-compartment **266** or **268**.

[0042] Dividers **250**, **260**, and **262** are multi-level dividers. A multi-level divider may have more than one flange on one side of the divider. As shown in FIG. **3**, multi-level divider **250** has a first upper support flange **280** and a first lower support flange **282** on the left side of multi-level divider **250** and a second upper support flange **284** and a second lower support flange **286** on the right side of multi-level divider **250**. The support flanges of multi-level dividers may extend into the sub-compartments. First upper support flange **280** and first lower support flange **282** extend into sub-compartment **251** and second upper support flange **284** and second lower support flange **286** extend into sub-compartment **254**. Note that the first and second lower support flanges are below the first and second upper support flanges, respectively.

[0043] Complementary supports may have upper and lower support flanges as well. FIG. **3** shows complementary support **255** with upper complementary support flange **292** and lower complementary support flange **294** and complementary support **256** with upper complementary support flange **297** and lower complementary support flange **298**. Complementary supports may be fashioned with one or more protrusions on one or more complementary support flanges. FIG. **3** illustrates complementary support **255** fashioned with protrusions **295** and **296** on upper complementary support flange **292**. A protrusion may be any bump, bulge, post, knob, ridge, or similar projection on the complementary support flange.

[0044] A food warming device may be used with trays of different sizes, including trays of different widths and heights. FIG. **3** shows food warming apparatus **10** capable of holding trays of different widths, and therefore, different sizes in sub-compartments **264** and **266**. FIGS. **4** and **5** show the exemplary food warming apparatus **10** with multi-level divider **250** and complementary supports **255** and **256** and shallow trays **240** and **242** within heating compartment **24**. FIG. **4** shows shallow trays **240** and **242** without covers. For example, a shallow tray may hold previously cooked food portions, such as fried foods or breads like biscuits, that are maintained uncovered to prevent the previously cooked food portions from becoming soggy.

[0045] A multi-level divider may be removably mounted in a food warming apparatus as described above for a single-level divider. In the example illustrated in FIG. **4**, multi-level divider **250** is mounted inside heating compartment **24** by mounting fastener **56** passing through mount **257** of multi-level divider **250** and through a hole at fixed mounting point **58** in cabinet **12** and then by securing mounting fastener **56** to cabinet **12**.

[0046] Shallow trays may be supported in a variety of ways, such as by a support structure such as a divider and a complementary support. For example, FIG. **4** shows trays **240** and **242** in heating compartment **24** supported by a multi-level divider **250** and complementary supports **255** and **256**.

[0047] In a preferred embodiment, the support flange of a divider may support a tray above the lower compartment surface. In a preferred embodiment, the complementary support flange of a complementary support may support a tray above the lower compartment surface or may cooperatively support a tray along with the support flange of the divider. As best seen in FIG. **5**, shallow tray **240** is supported above lower compartment surface **30** by first lower support flange **282** of multi-level divider **250** and lower complementary support flange **294** of complementary support **255**. FIG. **5** also shows shallow tray **242** supported above lower compartment surface **30** by second lower support flange **286** of multi-level divider **250** and lower complementary support flange **298** of complementary support **256**. In alternative embodiments, trays may also be supported from below by resting on a support structure, such as a rack, or by resting on the lower compartment surface.

[0048] Complementary supports and dividers may be mounted inside the heating compartment in various ways. A complementary support may be mounted on the upper compartment surface, the lower compartment surface, or a side-wall of the heating compartment. FIG. **5** shows complementary support **255** mounted on first side-wall **29** of heating compartment **24** and complementary support **256** mounted on second side-wall **31** of heating compartment **24**.

[0049] FIG. **6** illustrates single-level divider **50** with first support flange **53** and second support flange **54**. A support flange may be fashioned with one or more protrusions. FIG. **6** illustrates divider **50** fashioned with protrusions **83** and **84** on first support flange **53** and protrusions **85** and **86** on second support flange **54**. A protrusion may be any bump, bulge, post, knob, ridge, or similar projection on the support flange. A single-level divider may have one or more mounts for mounting the single-level divider on the cabinet. FIG. **6** shows single-level divider **50** with two mounts **57** that receive a mounting fastener. A mount may be a hole, aperature, notch, slot, gap, or other opening that receives a mounting fastener that may pass through the mount and removably mount the divider on the food warming apparatus.

[0050] An alternative mount is a clasp, clamp, hook, or other device on the divider that temporarily mounts the divider on the food warming apparatus to the cabinet or heating compartment surface along a ridge, bump, or other protrusion formed in the cabinet or heating compartment surface. A second alternative could be the use of a magnetic or

electromagnetic mount, where a magnet is provided either on the divider or on the food warming apparatus. The magnet could then attach to ferro-magnetic material in either the food warming apparatus, if the magnet is on the divider, or the divider, if the magnet is on the food warming apparatus.

[0051] FIG. **7** illustrates multi-level divider **250** with support flanges **280**, **282**, **284**, and **286**. As with the single-level divider, one or more support flanges on the multi-level divider may be fashioned with protrusions. FIG. **7** illustrates support flange **280** fashioned with protrusions **287** and **288** and support flange **284** fashioned with protrusions **289** and **290**. A multi-level divider may have one or more mounts for mounting the multi-level divider on the cabinet. FIG. **6** shows multi-level divider **250** with two mounts **257** that receive a mounting fastener. The alternative mounting mechanisms described above for a single-level divider apply as well to a multi-level divider.

[0052] FIG. **8** depicts tray **40** and cover **44**. In an exemplary embodiment, cover **44** is made out of a sheet material. The sheet material could be a metal, such as stainless steel, aluminum, or titanium, with a thickness ranging from about 0.024 inches to about 0.125 inches, depending on the type of metal. A metal cover could be anodized black or other color based, for example, on desired thermal characteristics. It is to be understood that cover **44** could also be made out of other materials, such as plastics (e.g., high temperature Nylon, polysulfone, polyimide, polyethersulfone, polyetherimide, or polyphenylene sulfide), depending on the operating temperatures that the covers experience.

[0053] To construct a cover out of a sheet material, a generally rectangular piece of the sheet material may be cut and the free edges of the sheet material may also be bent to provide additional stiffness. Cover **44** includes a front turned-up edge **90**, a back turned-up edge **91**, and side turned-up edges **92** and **93**. Preferably, turned-up edges **90-93** do not contact upper compartment surface **28** when cover **44** is in heating compartment **24**.

[0054] FIG. **8** also shows that rim **95** of tray **40** may surround a top opening **96** that provides access to the interior of tray **40**. The interior of tray **40** defines a space that may be used to contain previously cooked food portions. The height of this interior space may be defined by the distance between a generally flat bottom wall **97** of tray **40** and the upper surface of rim **95**. The sides of the interior space may be defined by four side walls **98** that extend between rim **95** and bottom wall **97**.

[0055] Once inserted into a sub-compartment, the tray may rest in an internal position within a sub-compartment. FIG. **9** shows tray **40** resting on supplementary support **51** and first support flange **53** of single-level divider **50** in an internal position. The internal position may be a position where the tray is centered or nearly centered within the sub-compartment. When a tray rests in an internal position, the cover may at least partially block the top opening of the tray. FIG. **9** shows tray **40** the internal position, with cover **44** at least partially blocking top opening **96** of tray **40**. In this position, cover **44** will restrict the evaporation of liquid from previously cooked food items contained in the interior of tray **40**.

[0056] The internal position of the sub-compartment may be at least partially defined by one or more protrusions on the support flange of the divider. The internal position also may be at least partially defined by protrusions on the supplementary support. FIG. **9** shows the internal position defined by protrusions **83** and **84** on first support flange **53** of divider **50** and protrusions **87** and **88** on complementary support flange **55** of supplementary support **51**.

[0057] A rim of a tray may be located between two protrusions on the support flange of the divider when the tray is at the internal position. Also, the rim of the tray may be located between two protrusions on the complementary support when the tray is at the internal position. When the rim is located between protrusions, the protrusions may hinder or arrest movement of the tray in or out of the compartment. Hindering or arresting movement of the tray may define the internal position for a user who may pull the tray out to access one or more previously cooked food portions in the tray and push the tray back into place; such as returning the tray to the internal position. As indicated in FIG. **9**, when tray **40** is completely inserted into the sub-compartment **64** from the front, rim **95** of tray **40** engages protrusions **84** and **88**. Protrusions **84** and **88** are marked, but are not visible in FIG. **9**, as protrusions **84** and **88** are positioned toward the back of heating compartment **24**. When rim **95** engages protrusions **84** and **88**, the motion of tray **40** is arrested in an internal position. If the back of the food warming apparatus is open, a tray may be inserted from the back of the food warming apparatus. As best shown in FIG. **2**, when tray **40** is completely inserted into the sub-compartment **64** from back **20**, rim **95** of tray **40** engages protrusions **83** and **87**. Once rim **95** engages protrusions **83** and **87**, the motion of tray **40** is arrested in an internal position.

[0058] An engagement edge of a cover may engage a stop member when a tray is removed from a sub-compartment of a heating compartment. By engaging the engagement edge, a stop member may to arrest the movement of the cover caused by removal of a tray from the sub-compartment. By arresting the motion of the cover while a tray is withdrawn, the cover may be retained inside the sub-compartment. As best shown in FIG. **9**, when tray **40** is withdrawn from sub-compartment **64** of heating compartment **24**, front turned-up edge **90** of cover **64**, acting as an engagement edge, engages stop member **61**. The engagement of engagement edge **90** with stop member **61** arrests the movement of cover **44**. As the movement of cover **44** is arrested, cover **44** is retained upon within sub-compartment **64** while tray **40** is withdrawn.

3. Exemplary Method of Use

[0059] As shown in FIG. **1**, single-level divider **50** may be mounted inside heating compartment **24** of food warming apparatus **10** to divide heating compartment **24** into a first sub-compartment **64** and a second sub-compartment **66**. Single-level divider **50** has a first support flange **53** extending into first sub-compartment **64** and a second support flange **54** extending into second sub-compartment **66**. First support flange **53** is fashioned with protrusions **83** and **84** and second support flange **54** is fashioned with protrusions **85** and **86**. As shown in FIG. **3**, multi-level divider **250** may be mounted inside heating compartment **24** to divide heating compartment **24** into a first sub-compartment **251** and a second sub-compartment **254**. Multi-level divider **250** has first upper support flange **280** and first lower support flange **282** extending into first sub-compartment **251** and second upper support flange **284** and second lower support flange **286** extending into second sub-compartment **254**.

[0060] Cabinet **12** of food warming apparatus **10** may also comprise complementary support **51**. Complementary support **51** may comprise a complementary support flange **55** that

extends into first sub-compartment **64**. Complementary support flange **55** is fashioned with protrusions **87** and **88**.

[0061] Tray **40** may be inserted into first sub-compartment **64**. Tray **40** may have a rim **95**. Rim **95** may be supported by first support flange **53**. First support flange **53** may support rim **95** of tray **40** so that tray **40** is suspended above lower compartment surface **30**. Also, complementary support flange **55** may support rim **95** of tray **40** so that tray **40** is suspended above lower compartment surface **30**. Further, first support flange **53** and complementary support flange **55** may cooperatively support rim **95** of tray **40**.

[0062] A user may pull out tray **40** from first sub-compartment **64** to access tray **40**, such as to add or remove previously cooked food portions from tray **40**. After accessing tray **40**, the user may then insert tray **40** into first sub-compartment **64**. When a user inserts tray **40** into first sub-compartment **64** from the front of food warming apparatus **10**, rim **95** of tray **40** may engage protrusions **84** on first support flange **53** and protrusion **88** on complementary support flange **55** to hinder or arrest movement of tray **40**. Hindering or arresting the movement of tray **40** by protrusions **84** and **88** defines the internal position for a user inserting the tray **40** into the front of first sub-compartment **64**. If the user were to insert tray **40** into first sub-compartment from the back of first sub-compartment **64**, rim **95** of tray **40** may engage protrusion **83** on first support flange **53** and protrusion **87** on complementary support flange **55** to hinder or arrest movement of tray **40**, thereby defining the internal position the user inserting tray **40** into the back of first sub-compartment **64**.

[0063] A user may pull out tray **42** from second sub-compartment **66** to access tray **42**, such as to add or remove previously cooked food portions from tray **42**. After accessing tray **42**, the user may then insert tray **42** into second sub-compartment **66**. Tray **42** may have a rim. The rim of tray **42** may be supported by second support flange **54**. Second support flange **54** may support the rim of tray **42** so that tray **42** is suspended above lower compartment surface **30**. Also, a complementary support flange of complementary support **52** may support rim **95** of tray **40** so that tray **40** is suspended above lower compartment surface **30**. Further, first support flange **53** and a complementary support flange of complementary support **52** may cooperatively support rim **95** of tray **40**.

[0064] Cover **44** also may be supported by first support flange **53**. Cover **44** may be supported by complementary support flange **55** as well. When tray **40** is inserted into first sub-compartment **64**, rim **95** of tray **40** may be slid between cover **44** and first support flange **53**. Also, rim **95** may be moved or slid between cover **44** and complementary support flange **51**. Tray **40** may rest within first sub-compartment **64** in a position where top opening **96** is between first support flange **53** and complementary support flange **51** to allow cover **44** to at least partially block top opening **96** of tray **40**. Rim **95** may come to rest between protrusions **83** and **84** of first support flange **53**. Also, rim **95** may come to rest between protrusions **87** and **88** of complementary support flange **55**.

4. Conclusion

[0065] While certain features and embodiments of the present invention have been described in detail herein, it is to be understood that the invention encompasses all modifications and enhancements within the scope and spirit of the following claims.

What is claimed is:

1. A food warming apparatus for maintaining previously cooked food portions contained in a plurality of trays in a ready-to-use condition, said plurality of trays including a first tray having a first rim extending outwardly from a first tray opening and a second tray having a second rim extending outwardly from a second tray opening, said food warming apparatus comprising:

a cabinet having at least one heating compartment therein, said at least one heating compartment having an upper compartment surface, a lower compartment surface, a first side-wall and a second side-wall;

at least one divider removably mounted in said at least one heating compartment, said at least one divider dividing said at least one heating compartment into at least a first sub-compartment and a second sub-compartment;

a first support flange disposed on said at least one divider for supporting said first rim of said first tray in said first sub-compartment such that said first tray is suspended above said lower compartment surface; and

a second support flange disposed on said at least one divider for supporting said second rim of said second tray in said second sub-compartment such that said second tray is suspended above said lower compartment surface.

2. The food warming apparatus of claim **1**, further comprising:

a first complementary support flange for supporting said first rim of said first tray in said first sub-compartment in cooperation with said first support flange; and

a second complementary support flange for supporting said second rim of said second tray in said second sub-compartment in cooperation with said second support flange.

3. The food warming apparatus of claim **2**, further comprising a cover disposed in said first sub-compartment between said first support flange and said upper compartment surface.

4. The food warming apparatus of claim **3**, wherein said cover is movably supported on said first support flange and said first complementary support flange such that said first rim of said first tray can be inserted between said cover and said support flanges to allow said first tray to reach an internal position within said first sub-compartment.

5. The food warming apparatus of claim **4**, wherein in said internal position said cover at least partially blocks said first tray opening so as to restrict evaporation of liquid from said previously cooked food portions contained in said first tray.

6. The food warming apparatus of claim **5**, further comprising at least one stop member removably mounted on said cabinet.

7. The food warming apparatus of claim **6**, wherein said at least one cover comprises at least one engagement edge for engaging said at least one stop member, such that said at least one stop member arrests movement of said at least one cover caused by removal of said first tray from said first sub-compartment.

8. The food warming apparatus of claim **5**, further comprising:

first and second protrusions on said first support flange and first and second complementary protrusions on said first complementary support flange, wherein said protrusions cooperatively define said internal position.

9. The food warming apparatus of claim **8**, wherein in said internal position, said first rim rests on said first support

flange between said first and second protrusions and said first rim rests on said first complementary support flange between first and second complementary protrusions.

10. The food warming apparatus of claim **1**, wherein said plurality of trays includes a third tray having a third rim extending outwardly from a third tray opening, said third tray being shallower than said first tray, further comprising at least one lower support flange disposed on said at least one divider for supporting said third rim of said third tray in said first sub-compartment, wherein said lower support flange is below said first support flange.

11. The food warming apparatus of claim **2**, wherein said first complementary support flange is disposed on said first side-wall and said second complementary support is disposed on said second side-wall.

12. The food warming apparatus of claim **2**, wherein said first complementary support flange is disposed on said first side-wall and said second complementary support is disposed on said at least one divider.

13. The food warming apparatus of claim **12**, wherein said first sub-compartment is larger than said second sub-compartment.

14. The food warming apparatus of claim **1**, wherein said at least one cover is metal.

15. The food warming apparatus of claim **1**, further comprising at least one heater plate for heating said at least one heating compartment.

16. A method for using a plurality of trays in a food warming apparatus, said plurality of trays including a first tray having a first rim extending outwardly from a first tray opening and a second tray having a second rim extending outwardly from a second tray opening, said food warming apparatus including a heating compartment, said heating compartment having a lower compartment surface and an upper compartment surface, said method comprising:

removably mounting a divider inside said heating compartment such that said heating compartment is divided into at least a first sub-compartment and a second sub-compartment, said divider including a first support flange extending into said first sub-compartment and a second support flange extending into said second sub-compartment;

inserting a first tray into said first sub-compartment such that said first rim is supported by said first support flange and said first tray is suspended above said lower compartment surface; and

inserting a second tray into said second sub-compartment such that said second rim is supported by said second support flange and said second tray is suspended above said lower compartment surface.

17. The method of claim **16**, further comprising:

supporting a cover in said first sub-compartment such that said cover rests on said first support flange.

18. The method of claim **17**, wherein inserting a first tray into said first sub-compartment comprises:

sliding said first rim between said cover and said first support flange until said cover at least partially blocks said first tray opening.

19. The method of claim **18**, wherein said first support flange further comprises a first protrusion and a second protrusion, and wherein sliding said first rim between said cover and said first support flange further comprises:

sliding said first rim until said first rim rests between said first protrusion and said second protrusion.

20. The method of claim **16**, wherein said food warming apparatus further comprises a first complementary support flange, and wherein inserting a first tray into said first sub-compartment further comprises:

supporting said first rim by said first support flange and said first complementary support flange such that said first tray opening is between said first support flange and said first complementary support flange.

* * * * *