US006175099B1

(12) **United States Patent**
Shei et al.

(10) **Patent No.: US 6,175,099 B1**
(45) **Date of Patent: Jan. 16, 2001**

(54) **HOLDING OR COOKING OVEN**

(75) Inventors: **Steven M. Shei**, Fort Wayne, IN (US); **Clement J. Luebke**, St. Louis, MO (US)

(73) Assignee: **Duke Manufacturing Co.**, St. Louis, MO (US)

(*) Notice: Under 35 U.S.C. 154(b), the term of this patent shall be extended for 0 days.

(21) Appl. No.: **09/538,761**

(22) Filed: **Mar. 30, 2000**

Related U.S. Application Data

(63) Continuation-in-part of application No. 09/282,313, filed on Mar. 31, 1999.

(51) **Int. Cl.**[7] **A47F 36/34**; F27D 1/18; F27D 11/02

(52) **U.S. Cl.** **219/399**; 219/385; 219/428; 219/394; 99/483

(58) **Field of Search** ..... 219/385, 394, 219/399, 428; 99/483, 367; 222/146.5; 126/400, 332, 357 R, 359; 221/150 A

(56) **References Cited**

U.S. PATENT DOCUMENTS

2,076,091	4/1937	O'Neill .	
2,964,609	12/1960	Anoff .	
3,051,582	8/1962	Muckler et al. .	
3,313,917	4/1967	Ditzler et al. .	
3,353,885	11/1967	Tompkins .	
3,681,568	8/1972	Schaefer	219/432
3,751,629	8/1973	Eisler .	
3,908,749	9/1975	Williams .	
4,024,377	5/1977	Henke	219/430
4,110,587	8/1978	Souder, Jr. et al. .	
4,198,559	4/1980	Walter et al.	219/430
4,235,282	11/1980	Filippis et al.	312/236
4,784,054 *	11/1988	Karos et al.	99/483
5,188,020	2/1993	Buchnag	99/483
5,235,903	8/1993	Tippmann .	
5,365,038	11/1994	Mitsugu	219/386
5,496,987	3/1996	Siccardi et al. .	
5,653,905	8/1997	McKinney .	
5,724,886	3/1998	Ewald et al. .	
5,783,803	7/1998	Robards, Jr. .	
5,852,967	12/1998	Fortmann et al.	99/483
5,900,173	5/1999	Robards, Jr.	219/385
5,947,012 *	9/1999	Ewald et al.	99/483
6,031,208	2/2000	Witt et al. .	

FOREIGN PATENT DOCUMENTS

829729	3/1960	(GB) .

* cited by examiner

Primary Examiner—Joseph Pelham
(74) *Attorney, Agent, or Firm*—Polster, Lieder, Woodruff & Lucchesi, L.C.

(57) **ABSTRACT**

An oven for maintaining cooked foods at temperatures suitable for serving the foods or even for cooking foods has a cabinet containing multiple heat sinks of channel-shaped configuration. The ends of the heat sinks open out of the cabinet, so that any heat sink may receive a tray of food from either the front or back of the cabinet. The interior surface of the heat sinks generally conform to the cross-sectional shapes of the trays, so that the heat sinks lie along the bottoms and sides of the trays. The heat sinks have a heating elements extended along their sides and bottoms for elevating the temperature of the heat sinks and directing heat into the trays within the heat sinks. In addition, each heat sink also contains a cover which may close the top of the tray in the heat sink and thereby retard the escape of moisture from the tray or may vent the interior of the tray.

34 Claims, 6 Drawing Sheets

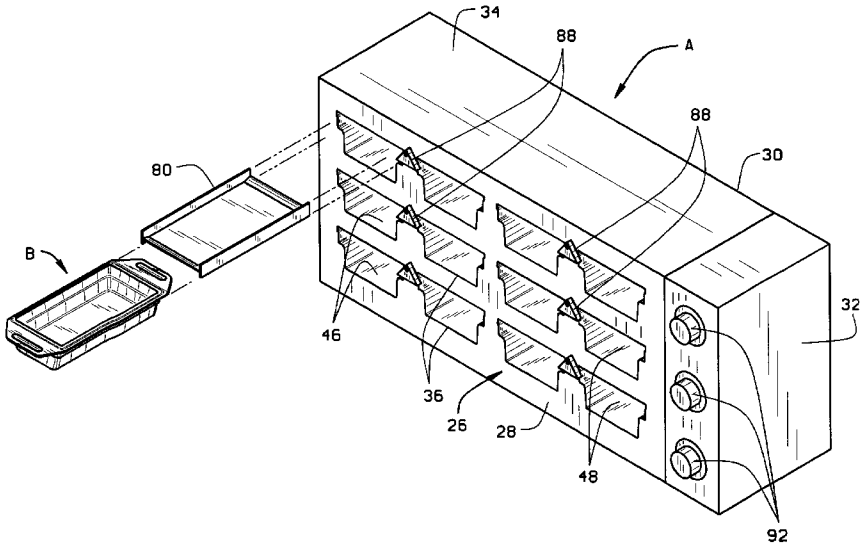

Duke Manufacturing Co. EX1017
U.S. Patent No. 10,492,641

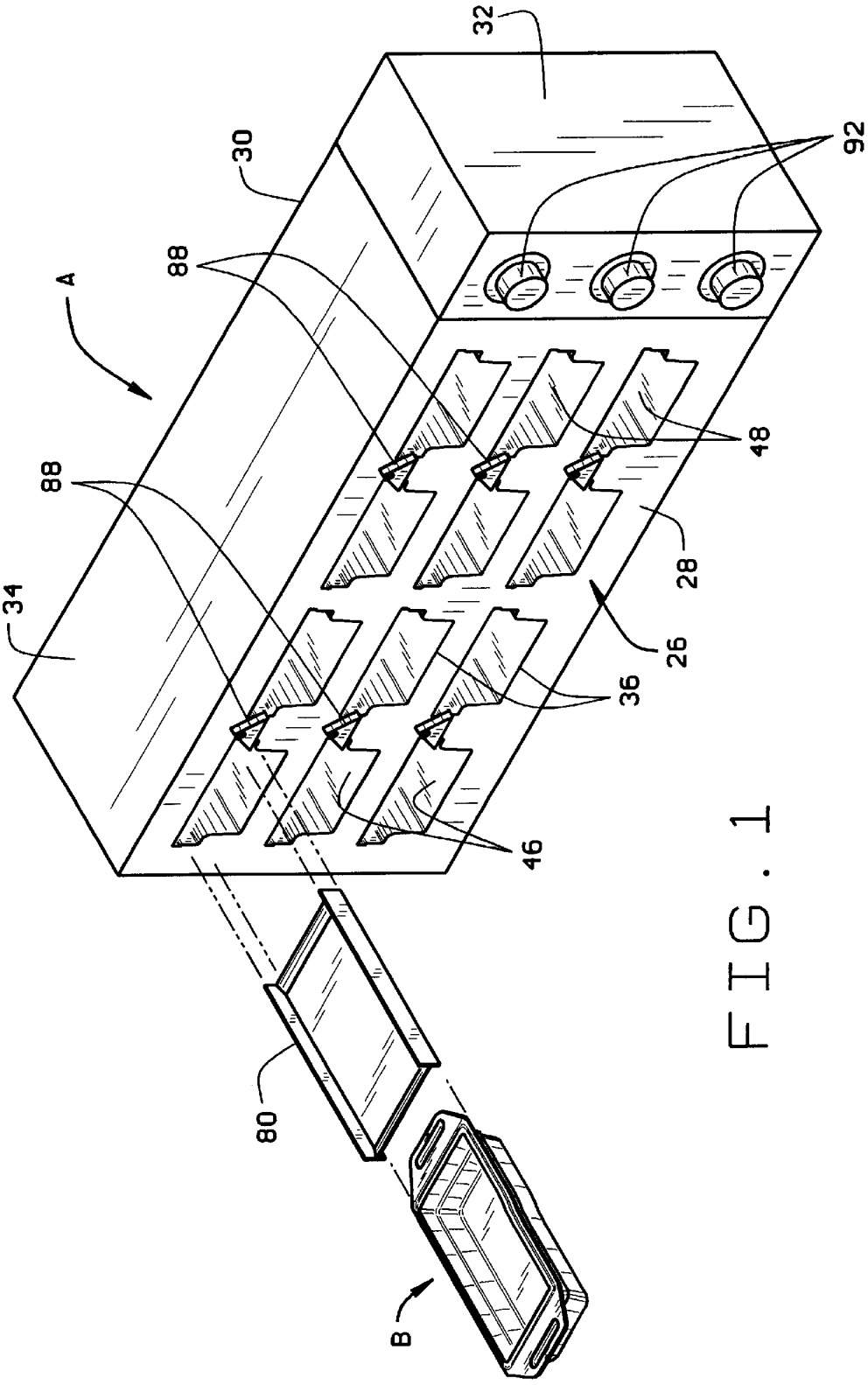

FIG. 1

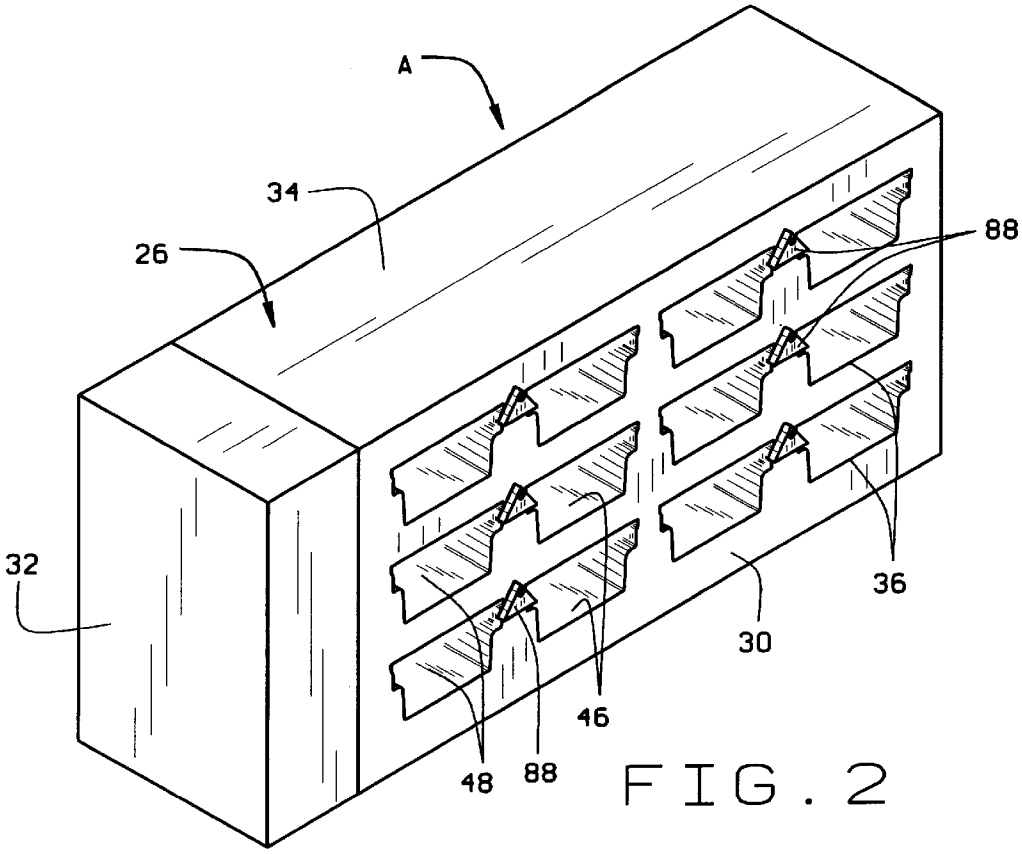

FIG. 2

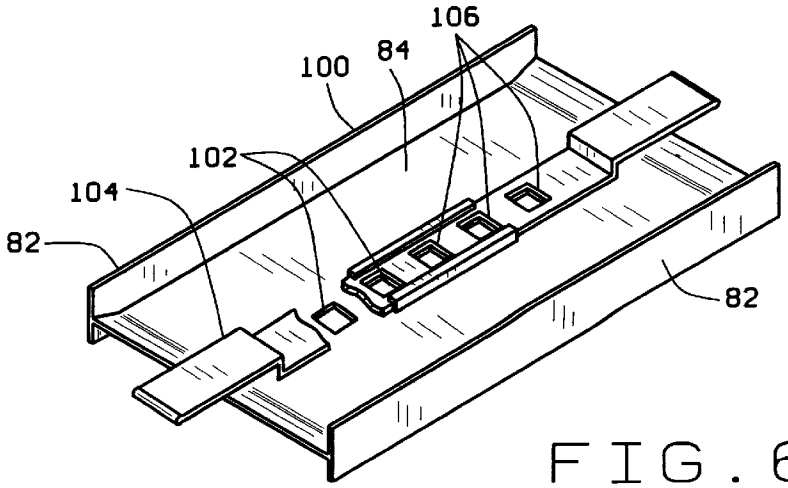

FIG. 6

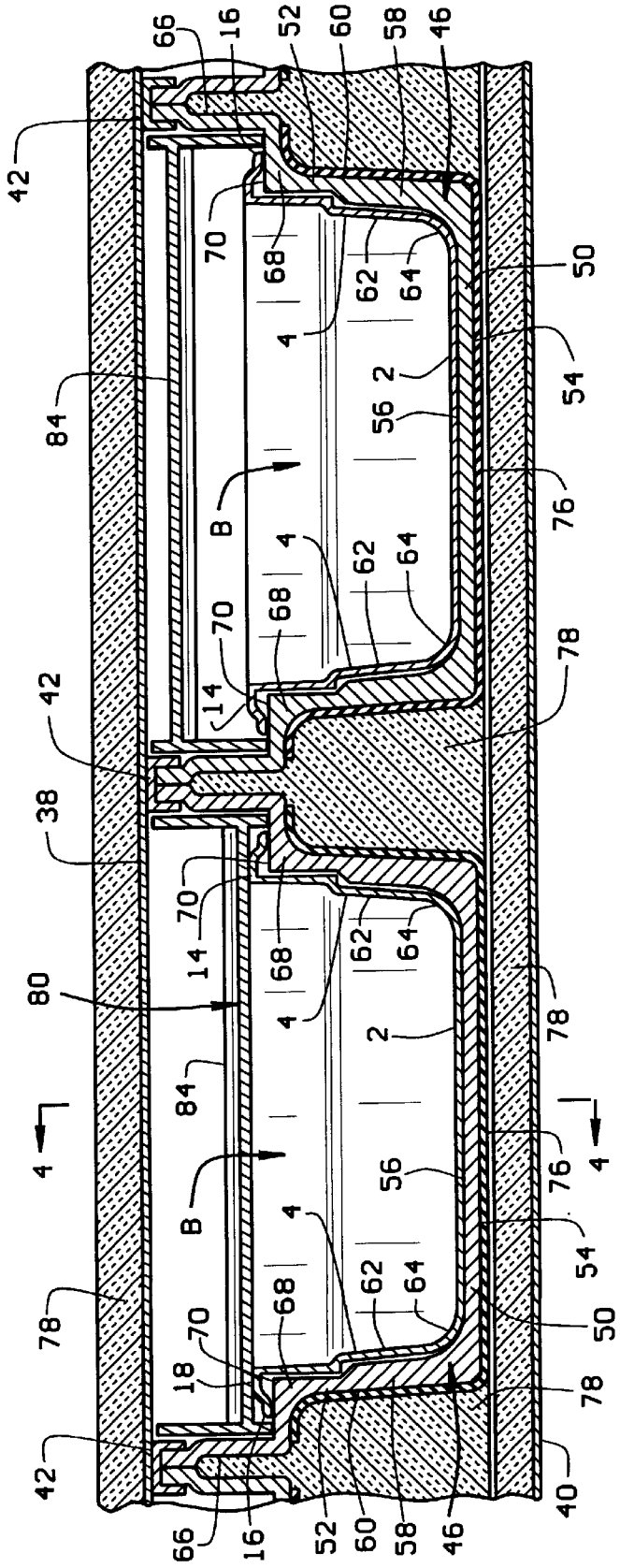

FIG. 3

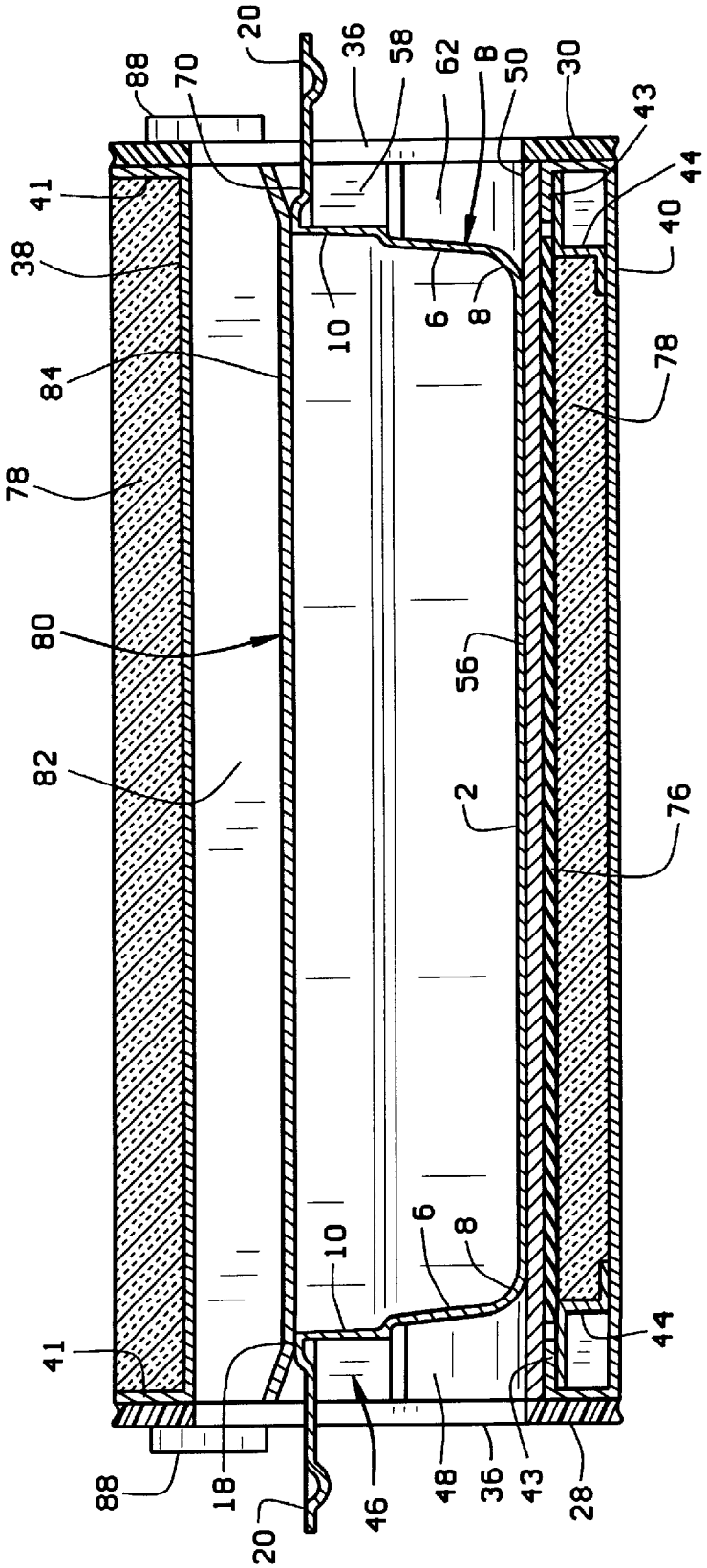
20
36
58
62
B
50
30
43
44
40
88
70
41
38
84
78
80
82
10
6
8
56
2
76
18
46
48
28

FIG. 4

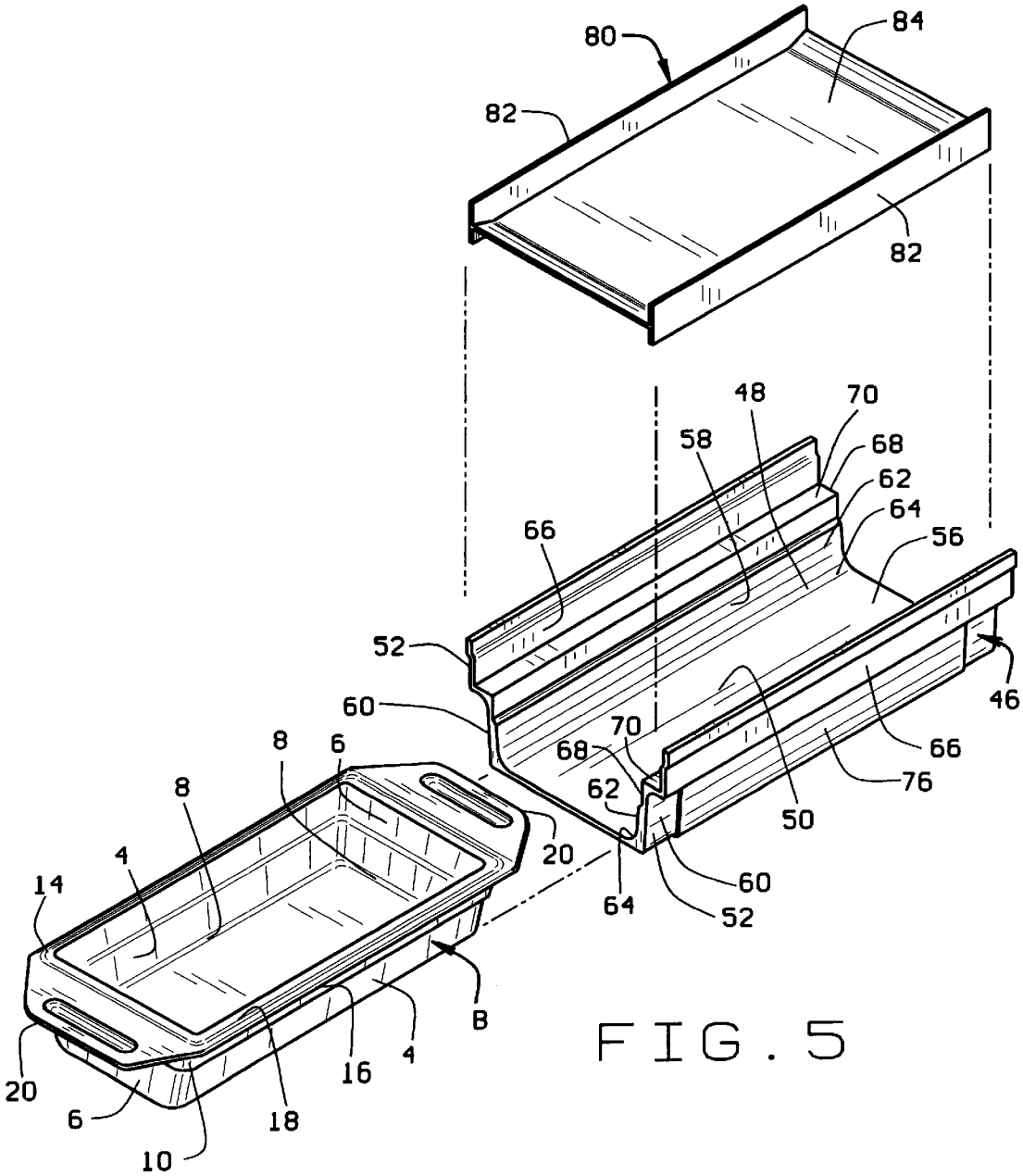
80
84
82
82
48
70
58
68
62
64
66
56
52
46
60
70
68
66
62
76
50
8
6
8
20
4
14
60
64
52
B
4
16
20
6
18
10

FIG. 5

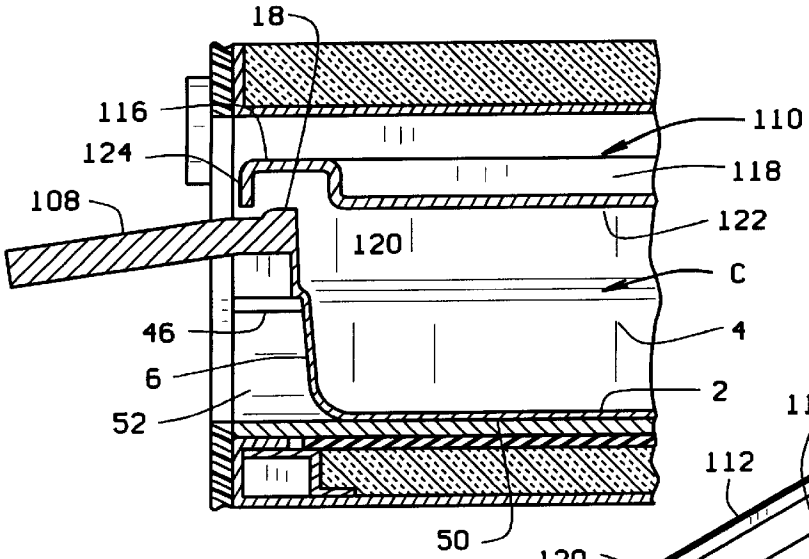
18
116
124
108
110
118
122
120
C
46
4
6
2
52
50

FIG. 8

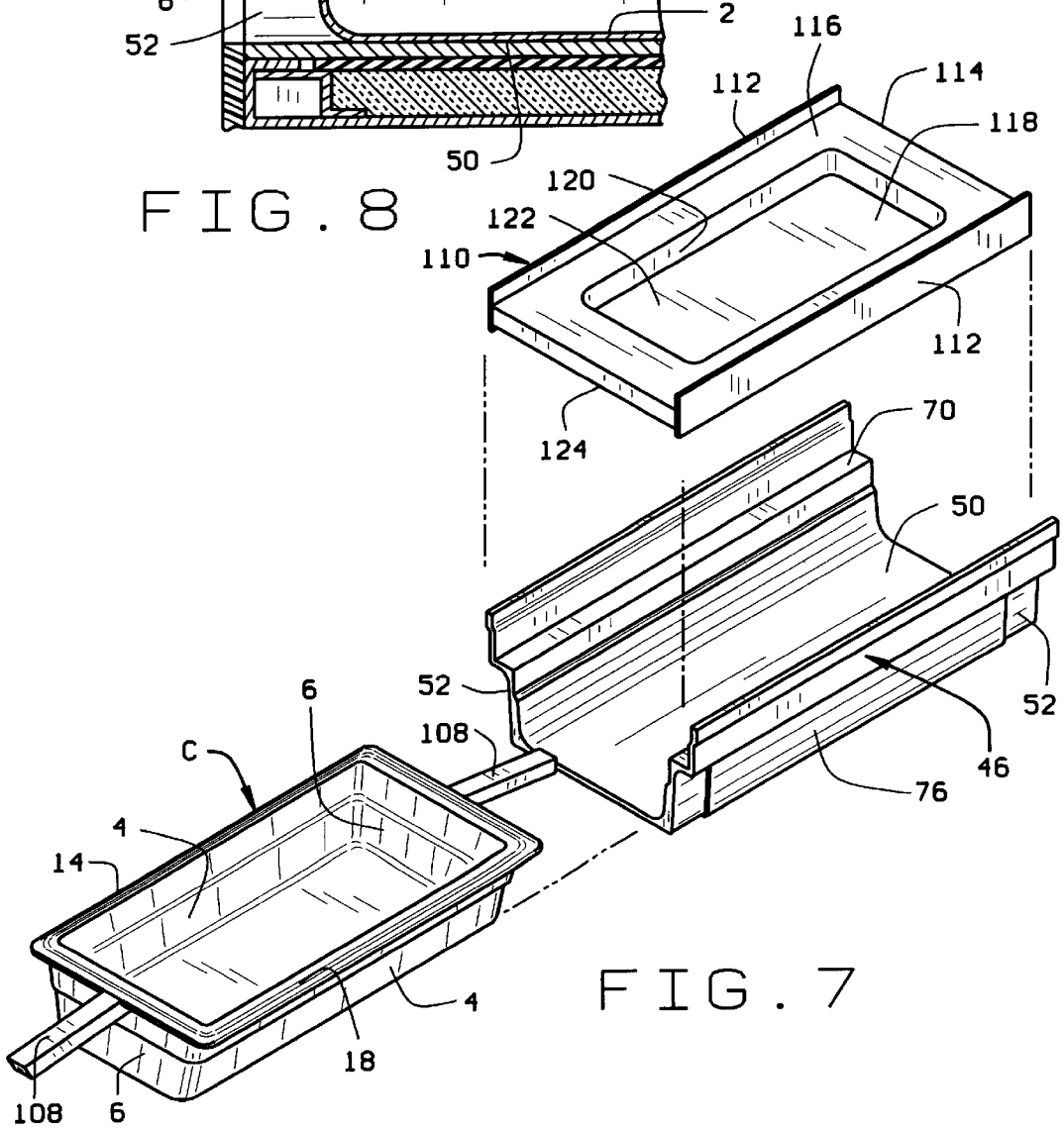
116
112
114
118
120
122
110
112
124
70
50
52
52
6
108
46
76
C
4
14
4
18
108
6

FIG. 7

HOLDING OR COOKING OVEN

CROSS-REFERENCE TO RELATED APPLICATIONS

This application is a continuation-in-part of application Ser. No. 09/282,313 filed Mar. 31, 1999.

STATEMENT REGARDING FEDERALLY SPONSORED RESEARCH OR DEVELOPMENT

Not Applicable.

BACKGROUND OF THE INVENTION

This invention relates in general to ovens and more particularly to an oven for maintaining foods at temperatures suitable for serving or for even cooking foods.

Most restaurants which specialize in serving cooked food rapidly—indeed, essentially with the placement of an order—do not have the capacity to prepare large quantities of food on demand. Thus, traditional meal times, particularly the noon hour, place severe demands on these restaurants. Typically, the so-called "fast food" restaurant will prepare some cooked food in advance of a meal time and keep that food warm in a holding oven. Then, during a meal time when the demand is greatest, it will use the food previously cooked.

Some cooked foods, such as hamburger patties, should be held at elevated temperatures only in a moist environment, since these foods, when depleted of their moisture content have poor taste and texture. Other cooked foods, such as breaded chicken or fish fillets, should be stored such that moisture may escape, so that they remain crisp. While it is convenient to store different foods at the same location, the flavor of one food should not transfer to another food. Moreover, irrespective of the food, the temperature at which it is stored must remain high enough to prevent bacterial contamination, and this generally requires holding the food at temperatures in excess of about 150° F. Holding ovens that are currently in use in fast food restaurants do not fully satisfy these requirements.

The holding ovens of current manufacture accept trays containing the cooked foods. The typical oven has a cabinet containing storage spaces which are accessible from both the front and rear of the cabinet, so that a tray containing cooked food may be placed into a storage space at one face of the cabinet and withdrawn at the other face. Each storage space has a heated platen along its top and also preferably at its bottom, and these platens transfer heat to the trays. The cabinet also contains a mechanism for closing the upper ends of the trays to prevent moisture from escaping. In one type of holding oven this mechanism resides in making the spacing between a heated platen on which the tray rests and the heated platen which overlies the tray about equal to the height of the tray, so that the upper margin of the tray lies along and essentially against the overlying platen, thus in effect closing the tray. See U.S. Pat. No. 5,724,886. Another type of holding oven supports the tray on a resilient grate which urges a tray upwardly against an overlying heated platen, thereby effecting a seal with the overlying platen. See U.S. Pat. No. 5,783,803. These ovens are difficult to clean and do not efficiently concentrate the heat at the trays where it is needed. As a consequence, the food is often held at a temperature less than optimum. Sometimes, the spaces in these ovens hold trays with their tops open and this leads to a transfer of flavors between multiple trays in any one space. In any event, ovens of current manufacture have the capacity to store foods for only very limited periods of time.

BRIEF SUMMARY OF THE INVENTION

The present invention resides in an oven having a channel-shaped heat sink which is heated by a heater. The heat sink has a storage cavity which generally conforms to the shape of a tray or other food container received in the cavity. As such, the heat sink concentrates the heat generated by the heater at the tray so as to efficiently maintain the food in the tray at a temperature suitable for serving. The heat sink may have a cover for closing the top of the tray within it. Where the oven contains multiple heat sinks, these heat sinks are isolated from each other to prevent the flavor of the food in one from transferring to food in another.

BRIEF DESCRIPTION OF THE SEVERAL VIEWS OF THE DRAWINGS

In the accompanying drawings which form part of the specification and wherein like numerals and letters refer to like parts wherever they occur:

FIG. **1** is a front and top perspective view of a holding oven constructed in accordance with and embodying the present invention, with one of the covers and one of its trays shown removed;

FIG. **2** is a top and rear perspective view of the oven;

FIG. **3** is a transverse sectional view of two heat sinks, one having its cover in its sealing position and the other having its cover in the venting position;

FIG. **4** is a fragmentary sectional view taken along line **4**—**4** of FIG. **3**;

FIG. **5** is an exploded perspective view of a heat sink, the cover for the heat sink, and a tray;

FIG. **6** is a perspective view of a modified cover.

FIG. **7** is an exploded perspective view of the heat sink, a modified cover for the heat sink, and a modified tray; and

FIG. **8** is a fragmentary longitudinal sectional view of the modified tray of FIG. **7** fitted beneath the modified cover of FIG. **7**.

Corresponding reference numerals will be used throughout the several figures of the drawings.

DETAILED DESCRIPTION OF THE INVENTION

Referring now to the drawings, an oven A (FIGS. **1**&**2**) holds multiple trays B in which precooked food is placed and held for limited times, indeed, several hours in the case of some foods. The oven A and the trays B, which are used with it, will accommodate a variety of foods typical of those served in fast food restaurants. Among those foods are cooked hamburger patties, ham, bacon, sausage, onion rings, French toast, fish fillets, chicken fillets and biscuits. Thus, the trays B constitute food containers. The oven A heats the trays B from their bottoms as well as their sides. Moreover, one who places a tray B in the oven A has the option of closing the top of the tray B so as to retain moisture in the tray B or leaving the top open so that moisture may escape from the tray B.

Considering the trays B first, they are preferably molded from a polymer that is capable of withstanding the temperatures maintained in the oven A, although trays B of stamped metal will suffice as well. In any event, such a tray B has (FIGS. **3**–**5**) a flat bottom wall **2** and also side walls **4** and end walls **6** that merge with the bottom wall **2** at corners **8** of generous radius. The side walls **4** and end walls **6** flare outwardly slightly and each has an offset portion **10** near its upper end. The offset portions **10** of the walls **4** and **6**, along

their upper margins, merge into a rim in the form of a peripheral lip **14** which projects laterally outwardly and, beyond the side walls **4**, turns slightly downwardly at a depressed edge **16** (FIG. **3**). The lip **14** has a flat upper surface **18** that lies in a common plane along the entirety of the lip **14**. At the end walls **6** the lip **14** merges into handles **20** which lie below the plane of the upper surface **18**. Similar trays see widespread use in fast food restaurants.

The oven A includes (FIGS. **1**&**2**) a cabinet **26** having a front panel **28**, a rear panel **30**, end panels **32**, and a top panel **34**. The front panel **28** and rear panel **30** contain openings **36** which conform generally to the cross-sectional configuration of the trays B, but are slightly wider and somewhat taller. The openings **36** are arranged in several tiers, and for every opening **36** in the front panel **28** an opening **36** in the rear panel **30** aligns with it. The cabinet **26** at each tier of openings **36** also has (FIGS. **3** and **4**), an upper pan **38** that extends through it above the openings **36** and a lower pan **40** that extends through it below the openings **36**. The upper pan **38** has a peripheral lip **41** which projects upwardly and imparts rigidity to the pan **38**. The pan **38** carries channels **42** which extend between the front and rear panels **28** and **30** in the regions between the openings **36**. More channels **42** lie beyond the two endmost openings **36** as well. The channels **42** are attached firmly to the pan **38** and open downwardly. The lower pan **40** for each tier has lips **43** that project upwardly and turn inwardly and, beneath the inwardly turned portions, has rigidifying members **44**. The space between the upper and lower pans **38** and **40** for each tier of openings **36** is occupied by several heat sinks **46**—one for each pair of aligned openings **36** in the tier.

Each heat sink **46** is formed from a substance that conducts heat well, aluminum being preferred. When formed from aluminum, the heat sinks **46** may be produced as extrusions or castings or they may even be produced by machining. Irrespective of how it is produced, each heat sink **46** possesses (FIG. **5**) a channel-like configuration in that it is open at both ends and at its top and closed along its two sides and bottom. This leaves the heat sink **46** with a cavity **48** that extends the full length of the heat sink **46**. The open ends of the cavity **48** align with openings **36** in the front and rear panels **28** and **30** of the cabinet **26**, so that the cavity **48** of the heat sink **46** is easily accessible from the exterior of the oven A. The cavity **48** generally conforms to the exterior cross-sectional configuration of any tray B.

More specifically, each heat sink **46** includes (FIGS. **3**&**5**) a bottom wall **50** and side walls **52** which are formed integral with the bottom wall **50** and project upwardly from it. The bottom wall **50** is of uniform thickness, it being about 3/16 in. thick, and has a flat bottom surface **54** and a flat top surface **56**. In contrast, the two side walls **52**, while being mirror images of each other, have somewhat varied thickness. Each side wall **52** has a lower region **58** that generally corresponds in height to the height of a tray B. The lower region **58** has a flat outside surface **60** and a contoured inside surface **62** that merges with the flat top surface **56** of the bottom wall **50** at a curved comer **64**. Immediately above the comer **64**, the inside surface **62** flares outwardly slightly, then after undergoing a more abrupt change in direction, extends vertically for a lesser distance. The spacing between the inside surfaces **62** for the side walls **52** of the heat sink **46** is slightly greater than the width of the tray B measured across of the outside surfaces of its side walls **4**. Moreover, the inside surfaces **62** of the side walls **52** on the heat sink **46** generally conform in configuration to the outside surfaces for the side walls **4** of the tray B. When the tray B is inserted into the heat sink **46** with the bottom wall **2** of the tray B resting in the flat top surface **56** of the bottom wall **50** for the heat sink **46**, the side walls **4** of the tray B, despite their contoured configuration, are close to the inside surfaces **62** on the side walls **52** of the heat sink **46**. Generally, the spacing at any elevation between the inside surfaces **56** on side walls **52** of the heat sink **46** should be no more than about 1.0 in. larger than the spacing between the side walls **4** of the tray B at the outside surfaces of those side walls **4**. Thus, when the tray B is centered in the cavity **48** of the heat sink **46**, a clearance of no more than about 0.5 in. exists between the inside surfaces **62** of the side walls **52** for the heat sink **46** and the outside surfaces in the side walls **4** of the tray B. Preferably, when the tray B is centered, the clearance is about 0.015 in. The curved comers **64**, where the flat bottom surface **54** and contoured inside surfaces **62** of the heat sink **46** merge, lie opposite, yet close to, the corners **8** of the tray B.

The lower region **58** of each side wall **52** for the heat sink **46** merges into an upper region **66** at an offset **68**. The upper regions **66** extend vertically and by reason of the offsets **68**, the spacing between the upper regions **66** exceeds the spacing between the lower regions **58**. Indeed, that spacing exceeds the width of the tray B at its peripheral lip **14**. The contoured inside surfaces **62** on the lower regions **58** of the side walls **52** rise to flat horizontal shoulders **70** which extend over the offsets **68** and out to the upper regions **66**. The shoulders **70** lie in a plane that is parallel to the top surface **56** of the bottom wall **52**, and the distance between the shoulders **70** and the top surface **56** is slightly less than the distance between the lower surface of the bottom wall **2** for the tray B and the undersurface of the lip **14** at the side walls **4** which undersurface is at the depressed edge **16**. Thus, when the tray B rests on the bottom wall **2** of the heat sink **44**, the depressed edge **16** of the lip **14** beyond each side wall **4** lies slightly above the shoulders **70**. The lip **14** remains well below the upper edges of side walls **52** for the heat sink **46**.

Those upper edges lie along the upper regions **66** of the side walls **52** for the heat sink **46**, and here the upper regions **66** are enlarged slightly and received in the channels **42** that are attached to the upper pan **38** for the tier in which the heat sink **46** lies (FIG. **3**). The bottom wall **50** of the heat sink **46** at its ends rests on the inwardly turned portions of the lips **43** for the lower pan **40**. (FIG. **4**) to which it is fastened. Thus, the heat sinks **46** for any tier are captured between the upper and lower pans **38** and **40** for the tier. The channels **42** confine the heat sinks **46** of the tier laterally, whereas the front and rear panels **28** and **30** confine them longitudinally. In short, the heat sinks **46** are fixed in position in the cabinet **26**.

Each heat sink **46** is fitted with a heater which may take the form of a flexible heating element **76** of the electrical resistance type. It extends almost the full length of the heat sink **44**, covering the flat bottom surface **54** of the bottom wall **50**, the corners between the bottom wall **50** and side walls **52**, and the flat outside surfaces **60** on the lower regions **58** of the side walls **52**. It even curves outwardly along the bottom surfaces of the offsets **68** in the side walls **52**. To these surfaces the heating element **76**, which is preferably film-etched, is bonded, preferably with a silicone adhesive capable of withstanding the elevated temperatures produced by the heating element **76**. In this regard, the heating element **76** should produce enough heat and reach a temperature high enough to elevate the temperature of the heat sink **46** along the top surface **56** of its bottom wall **50** and along the contoured inside surfaces **62** of its side walls **52** to a temperature suitable for maintaining food within the

tray B that occupies that heat sink **46** at any desired temperature. Where the oven A serves as a holding oven, that temperature keeps the food warm enough for serving and warm enough to prevent bacterial contamination. Where the oven A functions as a cooking oven, that temperature is hot enough to actually cook the food.

Other types of heaters may be used as well. For example, the heater may take the form of resistance type heating rods embedded in the bottom wall **50** and in the lower regions **58** of the side walls **52**. Steam or hot water may be circulated through channels in the bottom wall **50** and lower regions **58** of the side walls **52** to maintain the heat sink **46** at an elevated temperature, in which case the channels and the fluid that flows within them become the heater. On the other hand, if the heat sink **46** is formed from a ferrous material, an induction heating device may be used to elevate the temperature.

Behind the side walls **52** of each heat sink **46** and beneath its bottom wall **50**, as well, the cabinet **26** is packed thermal insulation **78**. The lower pans **40** in the cabinet **26** support the insulation **78** and prevent the insulation **78** for any one tier of heat sinks **46** from dropping into the heat sinks **46** of the tier below.

In addition to its heating element **78**, each heat sink **46** is equipped with a cover **80** that rests on the shoulders **70** of its offsets **68** and generally occupies the space between the upper regions **66** of its side walls **52**. The cover **80** includes a pair of vertical legs **82** and a cross wall **84** that extends between and is attached to the vertical legs **82**. Indeed, the cross wall **84** is joined to the vertical legs **82** between the longitudinal edges of the legs **82**, it being offset closer to one longitudinal edge of each leg **82** than the other. However, near its ends the cross wall **84** flares away from the edges to which it is closest. The width of the cross wall **84** slightly exceeds the width of the tray B at its lip **14**. The height of the vertical legs **82** is slightly less that the height of the upper regions **66** of the two side walls **52** for the heat sink **44**. These dimensions enable one to easily slide the cover **80** into and out of the upper region of its heat sink **44**.

The configuration of the cover **80** is such that it may assume two positions within the space between the upper regions **66** of the side walls **52** for the heat sink **44**—a closing position (FIG. **3**-left) and a venting position (FIG. **3**-right). In the closing position the cross wall **84** of the cover **80** rests on the upper surface **18** of the lip **14** of the tray B, or else lies slightly above the upper surface **18** of the lip **14**. In either arrangement the cross wall **84** serves as a closure for the tray B. Where the cross wall **84** actually rests on the lip **14** the legs **82** project downwardly almost to the flat horizontal shoulders **70** of the heat sink **46**, but do not contact the shoulders **70**. The lower margins of the legs **82** lie between the lips **14** on the tray B and the upper regions **66** of the side walls **52** for the heat sink **46**. When the tray B is removed from the heat sink **46**, the legs **82** of the cover **80** drop downwardly and rest on the shoulders **70** of the heat sink **46**. But the ends of the cross wall **84** flare upwardly, leaving enough space between the shoulders **70** and those flared ends to accommodate the handles **20** of a tray B. On the other hand, where the cross wall **84** lies slightly above the upper surface **18** on the lip **14**, the legs **82** project downwardly to and actually rest on the flat horizontal shoulders **70** of the heat sink **46** with the lip **14** on the tray B being between the regions of contact. A clearance ranging up to 0.375 in. exists between the bottom of the cross wall **84** and the upper surface **18** on the lip **14**. The legs **82** extend up to and nearly contact the overlying upper pan **38** of the cabinet **26**. In the venting position the cover **80** is reversed. Its legs **82** rest on the shoulder **70** of the heat sink **46** outwardly from the peripheral lip **14** of the tray B, but the cross wall **84** lies well above the peripheral lip **14** and the handles **20**. This leaves an open space of at least 0.375 in. between the cross wall **84** of the cover **80** and upper surface **18** on the lip **14** of the tray B at each end wall **6** of the tray B, and moisture from the tray B may escape through these spaces.

At the sides of the openings **36** in the front panel **28** and rear panel **30**, the cabinet **26** is fitted with pivotal stops **88** of the triangular configuration. Each triangular stop **88** serves two openings **36**. It pivots at one of its apices, with the pivot axis being slightly above, but otherwise between, the two openings **36** that the stop **88** serves. The other two apices project beyond the upper regions **66** of the nearby side walls **52** for the heat sinks **46** at those openings **35**. As such, those other apices project past the ends of the openings **36**, but not across, the openings **36**.

The free apices of the stops **88** lie beyond the ends of the vertical legs **82** for the covers **80** and retain the covers **80** in the upper regions of the heat sinks **46**. However, to reverse a cover **80** and thereby change its position, the stop **88** at the heat sink **46** in which the cover **80** fits, is pivoted away from the opening **36** at that heat sink **46** so as to no longer block the opening **36**. While the stop **88** is held away from the opening **36**, the cover **80** is removed and reversed. Then the cover **80** is inserted back through the opening **36** in the reversed position. Once the cover **80** is fully within the heat sink **44**, the stop **88** is released, and it assumes its normal position, blocking the end of the opening **36** and thereby retaining the cover **80** in the heat sink **46**.

Finally, the cabinet **26** contains electrical controls **92** which control the temperature at which the heating elements **78** of the sinks **46** operate. A separate control **92** exists for each tier of heat sinks **44**. However, the controls **92** may be such that each heat sink **46** is controlled individually.

The oven A normally awaits use in a restaurant with some of its covers **80** in the sealing position and the remainder of its covers **80** in the venting position. As a meal time approaches, the employees of the restaurant cook various foods for which the restaurant expects to receive orders during the meal time. Immediately after these foods are prepared, they are placed in the trays B, each food being assigned to a different tray B. Some of these foods, such as hamburger patties, loose their taste and texture with loss of moisture. Others, such as fried chicken fillets, biscuits, and eggs become soggy if stored in an abundance of moisture. The trays B which contain foods that must remain moist are placed in heat sinks **44** having their covers **80** in the closing position (FIG. **3**-left). The trays B containing foods which must remain crisp are placed in heat sinks **44** in which the covers **80** are in the venting position (FIG. **3**-right). Each heat sink **44** directs heat through the bottom wall **2** and side walls **4** of the tray B that is within it, and the heat keeps the food in the tray B warm—indeed, warm enough to prevent bacterial contamination and warm enough to serve to patrons of the restaurant when the demand arises, all with the flavor and texture preserved.

To insert a tray B into a heat sink **44** having its cover **80** in the closing position, the restaurant employee brings the tray B to the rear panel **30** of the cabinet **26** and aligns it with one of the openings **36** at a heat sink **46**, the cover **80** for which is in its closing position. The employee inserts the handle **20** of the tray B beneath the upwardly flared end on the cross wall **84** for the cover **80** in that heat sink **46**. Thereupon, the employee advances the tray B into the heat

sink **46**, with the lip **14** of the tray B passing beneath the cross wall **84** of the cover **80**. When the tray B is fully within the heat sink **46**, the cross wall **84** of the cover **80** establishes a closure over the open top of the tray B and that wall **84** lies over the entire lip **14** along the periphery of the tray B. Moisture remains trapped within the tray B, even though the heat which is supplied by the heat sink **46** has the capacity to drive moisture from the food. As a consequence, the food in the tray B retains its taste and texture.

On the other hand, if the tray B contains a food which must remain crisp, the employee selects a heat sink **46** which has its cover **80** in the venting position. The tray B when aligned with the opening **36** for this heat sink **46** passes easily into the cavity **48** of the heat sink **46** with little manipulation, its lip **14** passing over the shoulders **70** of the heat sink **46** and its bottom wall **2** over the top surface **56** for the bottom wall **50** of the heat sink **46**. The cross wall **84** for the cover **80** remains well above the lip **14** on the tray B, so that moisture from the food within the tray B may escape at the open ends of the cover **80**, that is to say over the end walls **6** of the tray B and beneath the cross wall **84** of the cover **80**.

When the demand for a particular food arises within the restaurant, other employees remove the tray B containing that food from the oven A. This simply involves grasping the tray B by one of its handles **20** and withdrawing it from its heat sink **46**. In this regard, the handles **20** project beyond the front and rear panels **28** and **30** of the cabinet **26** and are easily accessible.

Any cover **80** is easily withdrawn from its heat sink **46** by pivoting the stop **88** at the one end of the heat sink **46** away from the opening **36** at the end of that heat sink **46**. This leaves the cavity **48** of the heat sink **46** unobstructed, and it is easily cleaned, owing to its continuous and smooth surfaces. It also enables an employee to easily clean the cover **80**. And, of course, it permits the employee to reverse the position of the cover **80**.

The heat sink **46** efficiently transfers heat from its heating element **76** to the tray B, thereby keeping the contents of the tray B at a desired temperature with minimum expenditure of electrical energy. The foods in the tray B that are withdrawn, even as long as several hours after being inserted into the oven A, have essentially the taste and texture that they possessed immediately after being cooked. Since the trays B are totally isolated from each other in the cabinet **26**, even when the covers **80** over those trays are in their venting positions, flavors are not transferred between the foods in different trays B.

A modified cover **100** (FIG. **6**) has side legs **82** and a cross wall **84** of essentially the same configuration as their counterparts in the cover **80**. However, the cross wall **84** contains openings **102** arranged in a row between the legs **82**. It also carries a slide **104** which likewise contains openings **106**. The slide **104** is captured on the cross wall **84** such that it cannot be lifted from the cross wall **84**, yet it can slide longitudinally over the wall **84**. Indeed, the slide **104** projects beyond the ends of the cross wall **84**, so that it can be manipulated from the exterior of the oven A to assume various positions on the cross wall **84**. In one position, the slide completely covers the openings **102** in the wall **84**, and in this position the tray B is sealed. In other positions the slide **104** exposes the openings located within and being joined to the elevated region **116**. The depressed region **118** has a peripheral wall **120** that is generally vertical and a bottom wall **122** which lies below, yet parallel to, the surrounding elevated region **116**.

When the tray C is in the cavity **48** of the heat sink **46** (FIG. **8**), the bottom surface of the elevated region **116** in the cross wall **114** lies directly above the upper surface **18** on the tray B, there being a gap of about 0.375 in. between the two surfaces. The peripheral wall **120**, on the other hand, is set inwardly from the upper surface **18** of the tray C and inwardly from the upper ends of the side walls **4** and end walls **6** as well, with the gap being about 0.375 in. The lower surface of the bottom wall **122** lies in a horizontal plane that is slightly above the plane defined by the upper surface **18** on the tray C, with the spacing between the two planes being about 0.01 in. This spacing allows the tray C to be inserted into and removed from the cavity **48** of the heat sink **46** without interference from the cover **110**.

At the ends of the cover **110** the elevated region **116** of the cross wall **114** turns downwardly in the form of a vertical lip **124**, the lower edge of which lies in the plane of the lower surface on the bottom wall **122**. When the tray C is in the heat sink **46**, the lips **124** lie slightly beyond the upper surfaces **18** at the ends of the tray C, yet over or slightly beyond the depressed edges **16** at those ends. The lips **124** and the nearby segments of the peripheral wall **120** for the depressed region **118** create labyrinths which retard moisture from escaping from the tray C.

To enhance the seal established by the lips **124** and the depressed region **118** of the cover **110**, the lips **124** may be fitted with elastomeric seal elements which bear against the end edges of the laterally directed lip **14** of the tray C beyond the two end walls **6** of the tray C. Likewise, elastomeric lip seals may also be fitted to the ends of the cross wall for the cover **80** to contact the lip **14** at the ends of the tray C and thereby enhance the sealing capabilities of the cover **80**.

The rear panel **30** of the cabinet **26**, in lieu of having openings **36**, may be solid. In such an arrangement the rear panel **30** would block one end of the cavity **48** for each heat sink **46**, and the heat sink **46** itself could wrap around the end of the cavity to close it and thus, transfer heat to that end wall **6** of the tray B which is presented toward the closed end. The other end of the heat sink **46** would remain open and indeed would open out of the cabinet **36** through the aligned opening **36** in the front panel **28**. Of course, the handle **20** on that end of the tray B which faces the closed end of the heat sink **46** would have to be removed or reconfigured, so that it will not interfere with the solid rear panel **30**.

Also, any tray B or C which must retain moisture may be fitted with a separate cover, and that would eliminate the need for the covers **80** or **110**. In this regard, covers are available on the market for the traditional trays that resemble the trays B and C.

This invention is intended to cover all changes and modifications of the example of the invention herein chosen for purposes of the disclosure which do not constitute departures from the spirit and scope of the invention.

What is claimed is:

1. An oven for heating foods, said oven comprising: a heat sink having a bottom wall and side walls which define a cavity in which food is placed; the cavity having ends, at least one of which opens out of the heat sink; a heater for heating the heat sink so that heat applied to the heat sink is transferred to the food in the cavity of the heat sink; and a cover located over the cavity.

2. An oven according to claim **1** wherein the cavity at both of its ends opens out of the heat sink.

3. An oven according to claim **2** wherein the cover is located between the side walls of the heat sink.

4. An oven according to claim **3** wherein the side walls of the heat sink have horizontal shoulders that are presented

upwardly, and the cover extends over the shoulders so that it may be supported on the shoulders.

5. An oven according to claim **4** wherein the cover is capable of assuming first and second positions in the heat sink, the cover when in the both positions extending over the cavity, but when in the first position extending over the cavity at an elevation less than when in the second position.

6. An oven according to claim **5** wherein the cover has generally vertical legs which lie over the shoulders on the heat sink and a generally horizontal cross wall that extends between the legs.

7. An oven according to claim **1** wherein the heater includes an electrical resistance heating element that is located along the side walls and the bottom wall of the heat sink.

8. The combination comprising: a heat sink formed from a good conductor of heat and having a bottom wall and side walls that extend upwardly from the bottom wall and together with the bottom wall define a cavity having ends, at least one of which opens out of the heat sink; a heating element on the heat sink for elevating the temperature of the heat sink; and a food container located in the cavity of the heat sink, the food container having a bottom wall that is located along the bottom wall of the heat sink, side walls that extend upwardly from the container bottom wall and are located along the side walls of the heat sink, and end walls that extend upwardly from the container bottom wall and connect the container side walls, whereby heat from the heat sink is transferred to the food container.

9. The combination according to claim **8** wherein at any elevation the spacing between the interior surfaces of the side walls for the heat sink and the side walls of the food container is no more than about 0.5 inches when the food container is centered between the side walls of the heat sink.

10. The combination according to claim **8** wherein container is a tray having an open top; and wherein the combination further comprises a cover mounted on the heat sink and extended over the open top of the tray.

11. The combination according to claim **10** wherein the tray has a rim located on its side and end walls and extending around the open top of the tray; and wherein the cover extends over the rim.

12. The combination according to claim **11** wherein the bottom wall of the tray rests on the bottom wall of the heat sink, and the side walls of the tray lie close to the side walls of the heat sink.

13. The combination according to claim **12** wherein at any elevation the spacing between the interior surfaces of the side walls for the heat sink is no more than 1.0 inch greater than the spacing between the exterior surfaces of the side walls for the tray.

14. The combination according to claim **12** wherein the rim of the tray projects beyond the side and end walls of the tray in the form of a peripheral lip and the cover extends over the lip.

15. The combination according to claim **13** wherein each side wall of the heat sink has an upwardly presented shoulder and the peripheral lip extends over the shoulders; and wherein the cover is configured to assume a closing position in which it is located immediately over, yet spaced slightly from, the tray lip, and a venting position in which it rests on the shoulders of the side walls for the heat sink and is separated from the tray lip, with the separation being substantially greater than the spacing between the cover and the tray lip when the cover is in its closing position.

16. The combination according to claim **14** wherein the cover contains a slide which moves between a closed position and an open position; and wherein the interior of the tray is vented when the slide is in its open position.

17. The combination according to claim **14** wherein the tray has handles which project beyond its end walls and beyond the ends of the heat sink.

18. The combination according to claim **14** wherein the cover has a cross wall that extends across the cavity, and the cross wall has an elevated region located over the rim of the tray and a depressed region surrounded by the elevated region and located below the elevated region.

19. The combination according to claim **18** wherein the cover further has lips extended downwardly from the elevated region of the cross wall and spaced from the ends of the depressed region.

20. In combination with a tray having a bottom wall and an upwardly opening interior that is enclosed at least by side walls and, where it opens upwardly, is surrounded by a rim that is located on the side walls, an oven for keeping contents of the tray warm, said oven comprising: a cabinet; a heat sink located within the cabinet, the heat sink being formed from a good conductor of heat and having a channel-shaped configuration which provides a cavity in which the tray is received, with the spacing between the tray and the sides of the heat sink not exceeding 0.5 inches when the tray is centered in the cavity, the cavity of the channel-shaped heat sink having at least one open end that opens out of the cabinet; and a heating element on the heat sink for elevating the temperature of the heat sink and thereby transferring heat to the tray that is in the heat sink.

21. The combination according to claim **20** and further comprising a cover located over the tray and being capable of closing the open top of the tray to retain moisture in the tray.

22. The combination according to claim **20** wherein the cover may assume a closing position in which it rests on the rim of the tray or a venting position in which it is separated from the rim of the tray.

23. The combination according to claim **20** wherein the cover may assume a closing position in which it is located in close proximity to the rim of the tray and a venting position in which it is spaced farther from the rim on the tray.

24. The combination according to claim **20** and further comprising a stop located on the cabinet where it blocks removal of the cover from the heat sink, but not removal of the tray.

25. The combination according to claim **20** wherein the channel-shaped heat sink has two open ends, each of which opens out of the cabinet.

26. The combination according to claim **20** wherein the heat sink has shoulders which extend laterally from the cavity; and wherein the cover includes legs which are located over the shoulders and a cross wall which extends between the legs and over the cavity.

27. The combination according to claim **26** wherein the cover is reversible in the heat sink so that it may assume a closing position or a venting position, the legs of the cover resting on the shoulders and the cross wall being spaced upwardly from the rim of the tray when the cover is in its venting position, the legs of the cover being over the shoulders and the cover being closer to the rim when the cover is in its closing position.

28. The combination according to claim **26** wherein the cross wall contains an elevated region that lies directly above the rim of the tray and a depressed region that is surrounded by the elevated region, yet lies at an elevation above the rim of the tray.

29. The combination according to claim **28** wherein the cover further has lips extended downwardly from the

elevated region of the cross wall and are spaced from the ends of the depressed region.

30. A cover for a food-containing tray that fits within a heat sink having shoulders for supporting the cover generally above the tray, said cover comprising: a pair of vertical legs, each provided with parallel first and second horizontal edges; and a cross wall joined along its sides to the legs closer to the first edges of the legs than to the second edges of the legs and extending between the legs.

31. A cover according to claim **30** wherein the cross wall contains openings, and further comprising a slide mounted on the cross wall and having openings, the slide being movable on the cross wall between positions in which the openings in the slide expose the openings in the cross wall and a position in which the slide closes the openings in the cross wall.

32. A cover according to claim **30** wherein the cross wall has an elevated region along which it is joined to the legs and a depressed region which is set inwardly from the sides and the ends of the cross wall.

33. A cover according to claim **32** wherein the cross wall at its ends has lips which turn downwardly and are spaced from the depressed region.

34. A cover according to claim **30** wherein the cross wall at its ends flares toward the second edges of the legs.

* * * * *