US006119587A

United States Patent [19]

Ewald et al.

[11] **Patent Number: 6,119,587**

[45] **Date of Patent: *Sep. 19, 2000**

[54] **COOKED FOOD STAGING DEVICE AND METHOD**

[75] Inventors: **Henry T. Ewald**, Schaumburg; **Jimmie L. Coffey**, St. Charles; **Patricia A. Venetucci**, Hawthorn Woods; **Gerald A. Sus**, Frankfort, all of Ill.

[73] Assignee: **Restaurant Technology, Inc.**, Oak Brook, Ill.

[*] Notice: This patent is subject to a terminal disclaimer.

[21] Appl. No.: **08/620,960**

[22] Filed: **Mar. 22, 1996**

Related U.S. Application Data

[63] Continuation-in-part of application No. 08/439,160, May 11, 1995, abandoned.

[51] **Int. Cl.**[7] **A47J 37/00**

[52] **U.S. Cl.** **99/374**; 99/389; 99/448; 99/468; 99/483; 426/418

[58] **Field of Search** 99/483, 373, 374, 99/389, 448, 468, 416; 426/418; 312/326; 219/400, 386, 214

[56] **References Cited**

U.S. PATENT DOCUMENTS

1,292,658	1/1919	Smith	99/374
1,638,041	8/1927	Korkames	99/483
1,814,942	7/1931	Mabey	99/374
2,076,091	4/1937	O'Neill .	
2,108,778	2/1938	Morgan	99/374
2,283,182	5/1942	Carl	99/389
2,860,225	11/1958	Steen	99/389
3,246,690	4/1966	Fry .	
3,313,917	4/1967	Ditzler et al.	219/400
3,908,749	9/1975	Williams .	
3,924,100	12/1975	Mack et al. .	
4,020,310	4/1977	Souder, Jr. et al. .	
4,068,115	1/1978	Mack et al. .	
4,093,041	6/1978	Davis et al. .	
4,110,587	8/1978	Souder, Jr. et al. .	
4,180,125	12/1979	Schulz et al. .	
4,210,675	7/1980	Liebermann .	
4,224,862	9/1980	Liebermann .	
4,232,789	11/1980	Springer .	
4,254,824	3/1981	Springer .	
4,278,697	7/1981	Lieberman .	
4,346,756	8/1982	Dodd et al. .	

(List continued on next page.)

FOREIGN PATENT DOCUMENTS

829729	3/1960	France .
876812	9/1961	France .
1371538	10/1963	France .

OTHER PUBLICATIONS

Wells Models DABC–1PS and DABC–1TL Equipment Manual, Apr., 1989, pp. 1–7.

Henny Penny Model HC–934DA Equipment Manual, Apr., 1995, pp. 1–6.

Carter–Hoffmann Models MD–110TL and MD–110PS Equipment Manual, Aug. 1994, pp. 1–8.

Primary Examiner—Patrick F. Brinson
Assistant Examiner—James F. Hook
Attorney, Agent, or Firm—Ryndak & Lyerla

[57] **ABSTRACT**

A cooked food staging device and method is provided. The cooked food staging device allows previously cooked food items, particularly sandwich fillings such as hamburger patties, fish fillets, biscuits, Canadian bacon, pork sausage, eggs, chicken patties, chicken fillets and nuggets, to be stored over extended periods of time at an elevated temperature without significant deleterious effects to the appearance, taste and texture of the food while avoiding risk of bacterial contamination. The food staging device is composed of a plurality of discrete compartments bounded by upper and lower heated compartment surfaces. Food can be stored within the compartments in trays having side walls of a height such that a gap is achieved between the top of the tray and the upper compartment heated surface to limit and control the evaporation of liquid from the food stored therein.

15 Claims, 10 Drawing Sheets

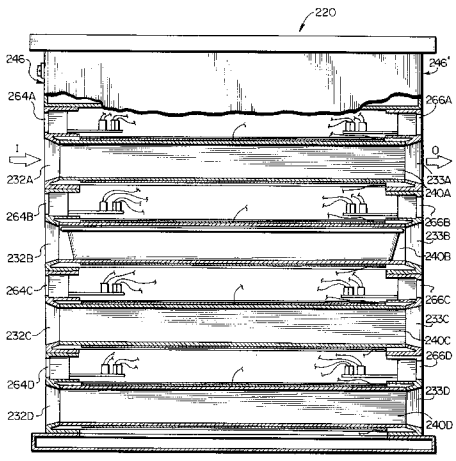

Duke Manufacturing Co. EX1024
U.S. Patent No. 10,492,641

U.S. PATENT DOCUMENTS

4,446,780	5/1984	Puvogel et al.	99/483
4,650,179	3/1987	Bond .	
4,784,054	11/1988	Karos et al. .	
5,086,693	2/1992	Tippmann et al. .	
5,172,328	12/1992	Cahlander et al. .	
5,201,364	4/1993	Tippmann et al. .	
5,203,258	4/1993	Tippmann et al. .	
5,404,935	4/1995	Liebermann .	
5,454,427	10/1995	Westbrooks et al.	219/386
5,496,987	3/1996	Siccardi et al.	219/386
5,586,488	12/1996	Liu	219/400

FIG.1

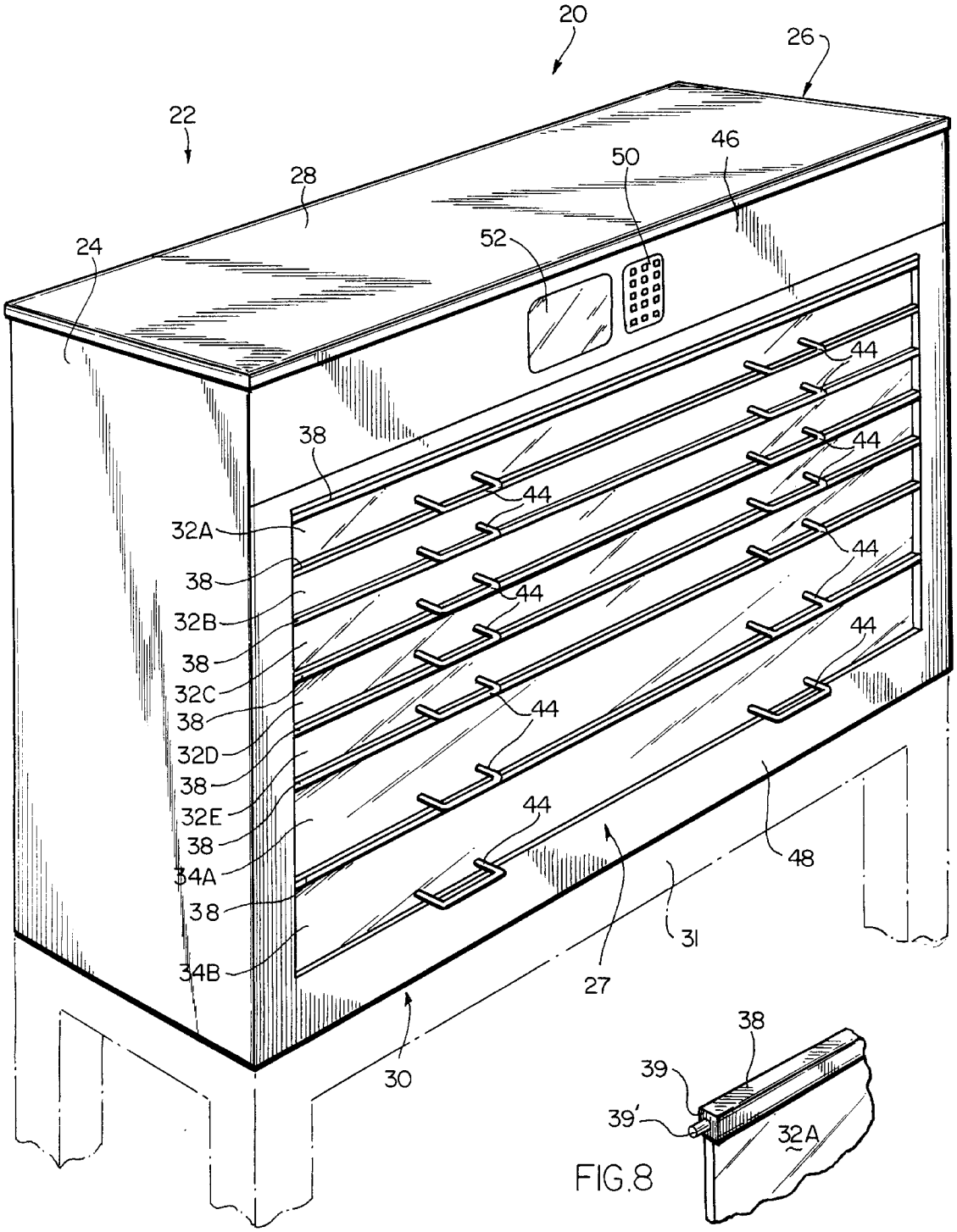
20
26
22
28
46
50
52
24
44
38
32A
32B
32C
32D
32E
34A
34B
48
31
27
30

38
39
39'
32A

FIG.8

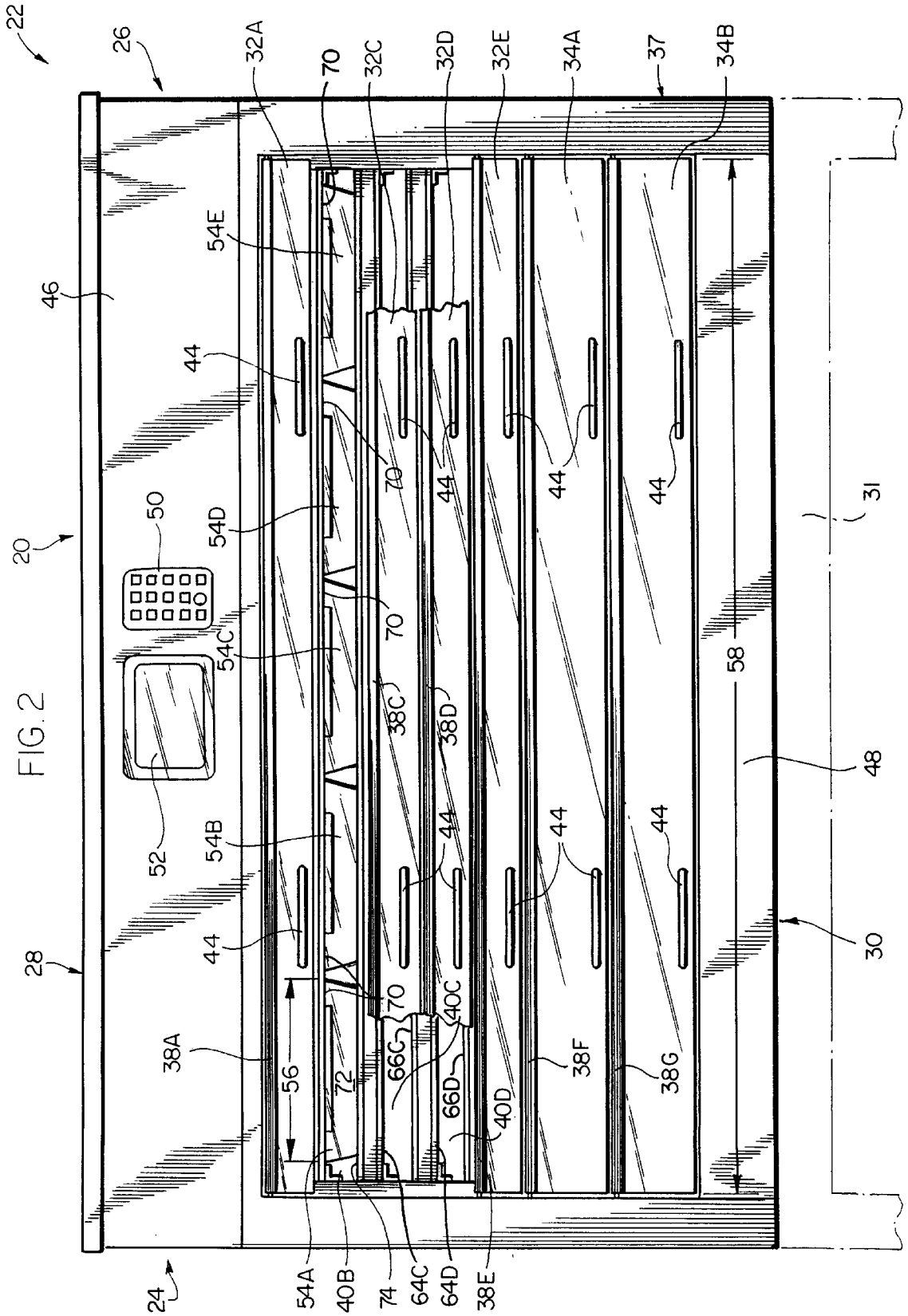
22
26
32A
70
32C
32D
32E
34A
37
34B
54E
46
44
70
44
44
44
31
20
50
54D
70
54C
58
38C
38D
48
52
54B
44
44
44
44
28
30
70
40C
38A
56
72
66C
66D
38F
38G
40D
54A
40B
74
64C
64D
38E
24

FIG. 2

FIG. 3

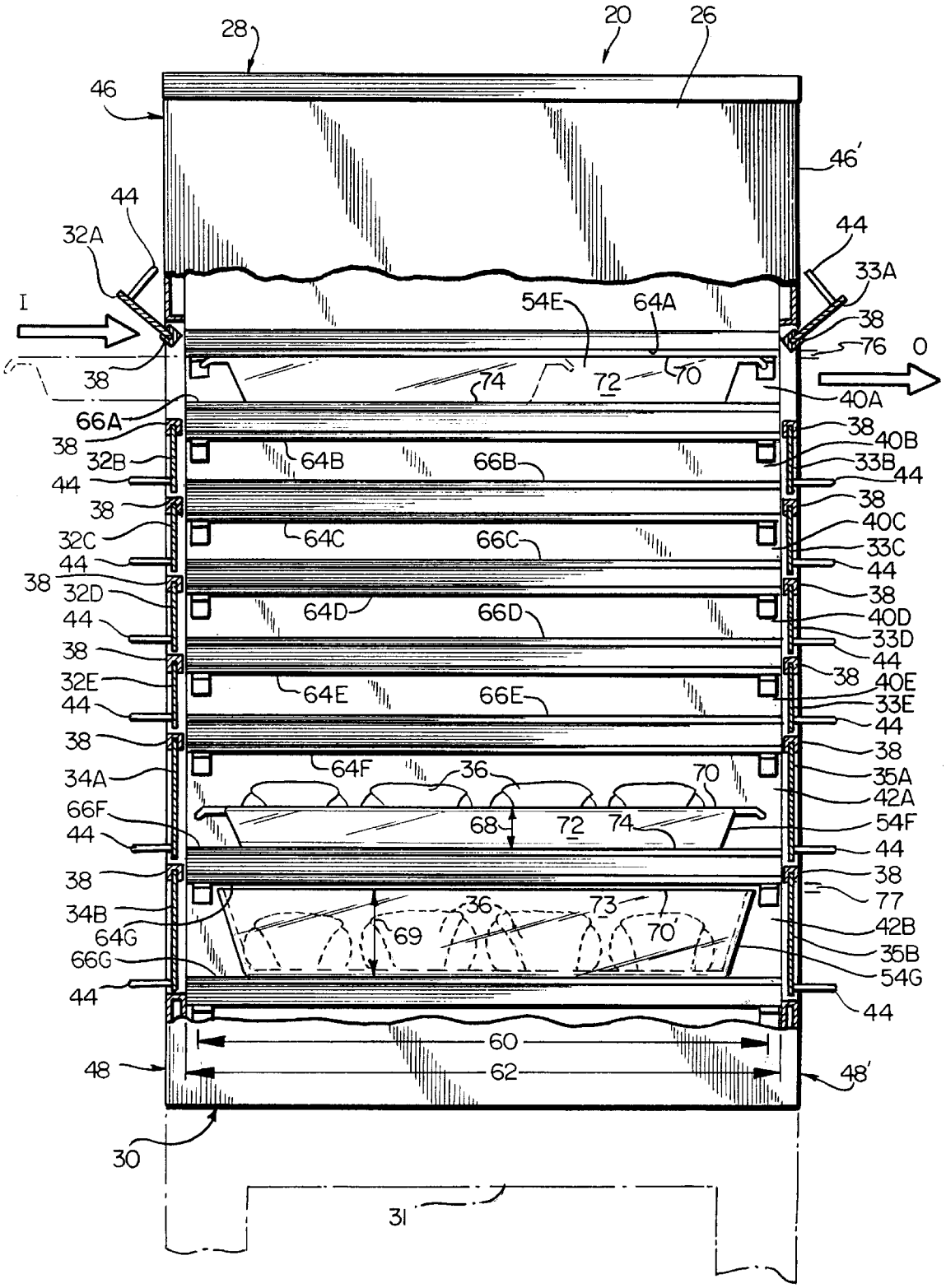
28
20
26
46
46'
44
32A
33A
I
54E
64A
38
76
O
74
72
70
40A
66A
38
40B
32B
64B
66B
33B
44
38
40C
32C
64C
66C
33C
44
38
32D
64D
66D
40D
33D
38
32E
64E
66E
40E
33E
34A
64F
36
70
35A
42A
66F
68
72
74
54F
38
34B
36
73
77
64G
69
70'
42B
66G
35B
54G
44
60
48
62
48'
30
31

FIG. 4

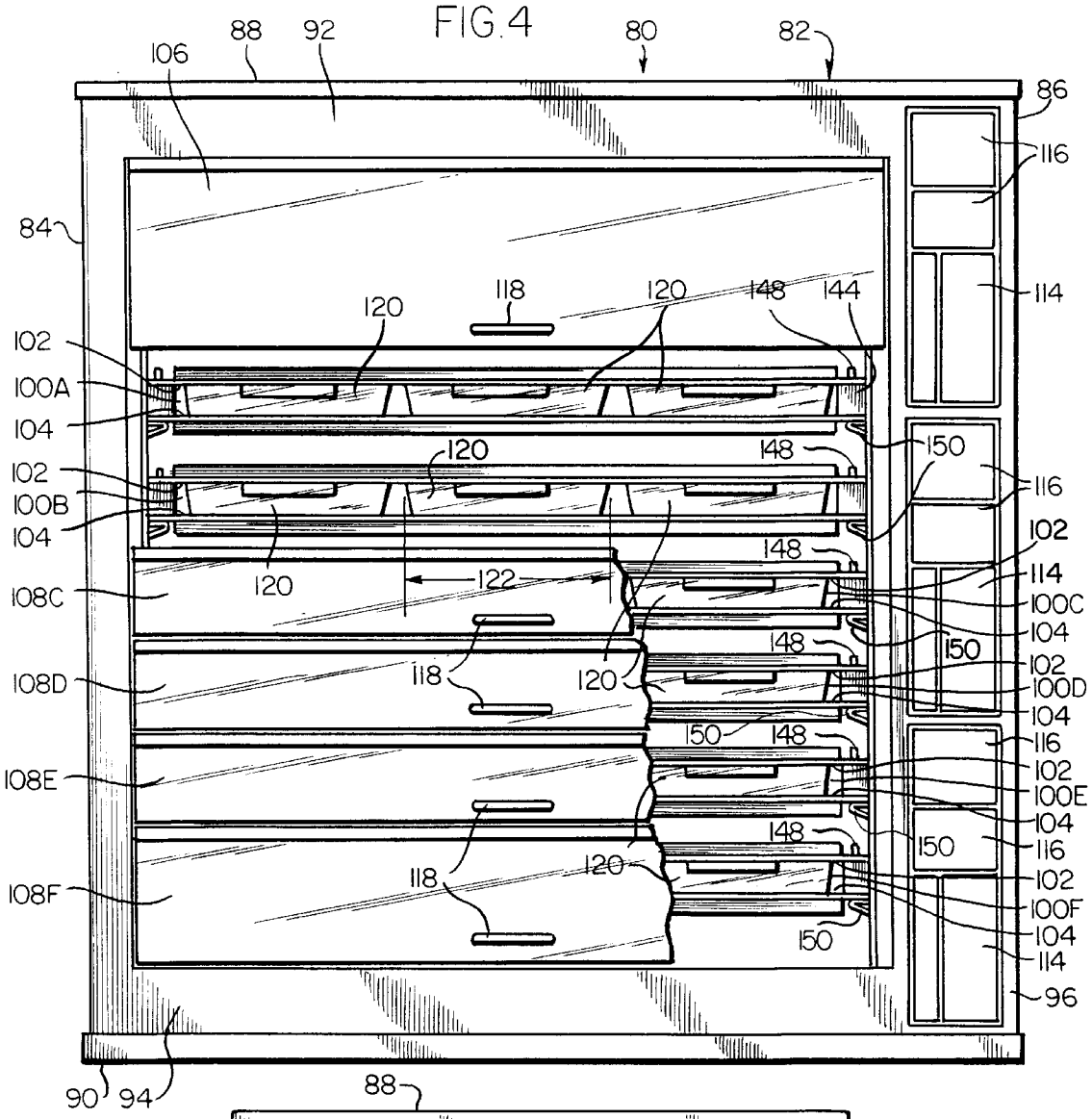
88
92
80
82
106
86
116
84
114
118
120
148
144
102
100A
104
150
100B
108C
122
100C
108D
100D
108E
100E
108F
100F
90
94
96

FIG. 5

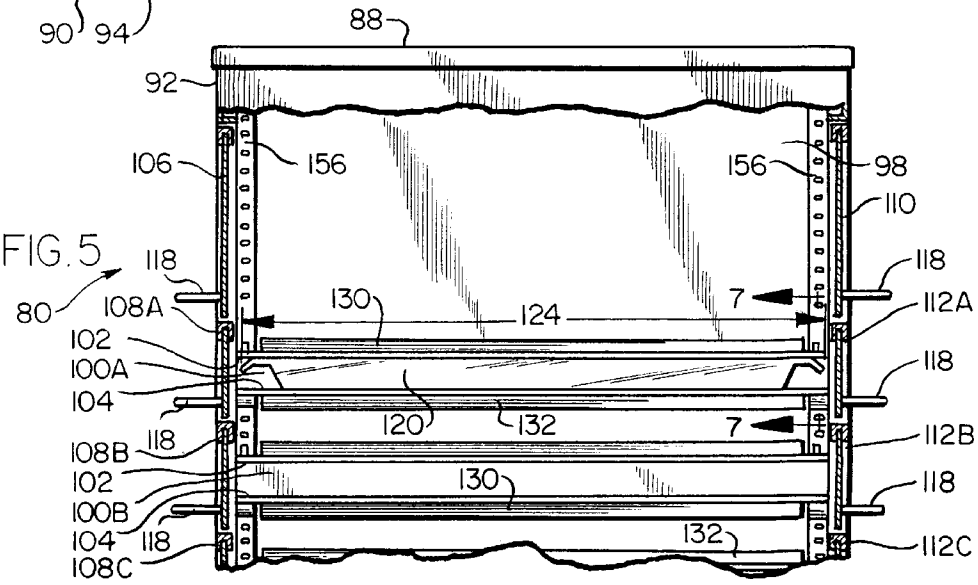
88
92
106
156
98
110
118
80
108A
130
124
7
112A
102
100A
104
120
132
112B
108B
100B
108C
112C

FIG. 6

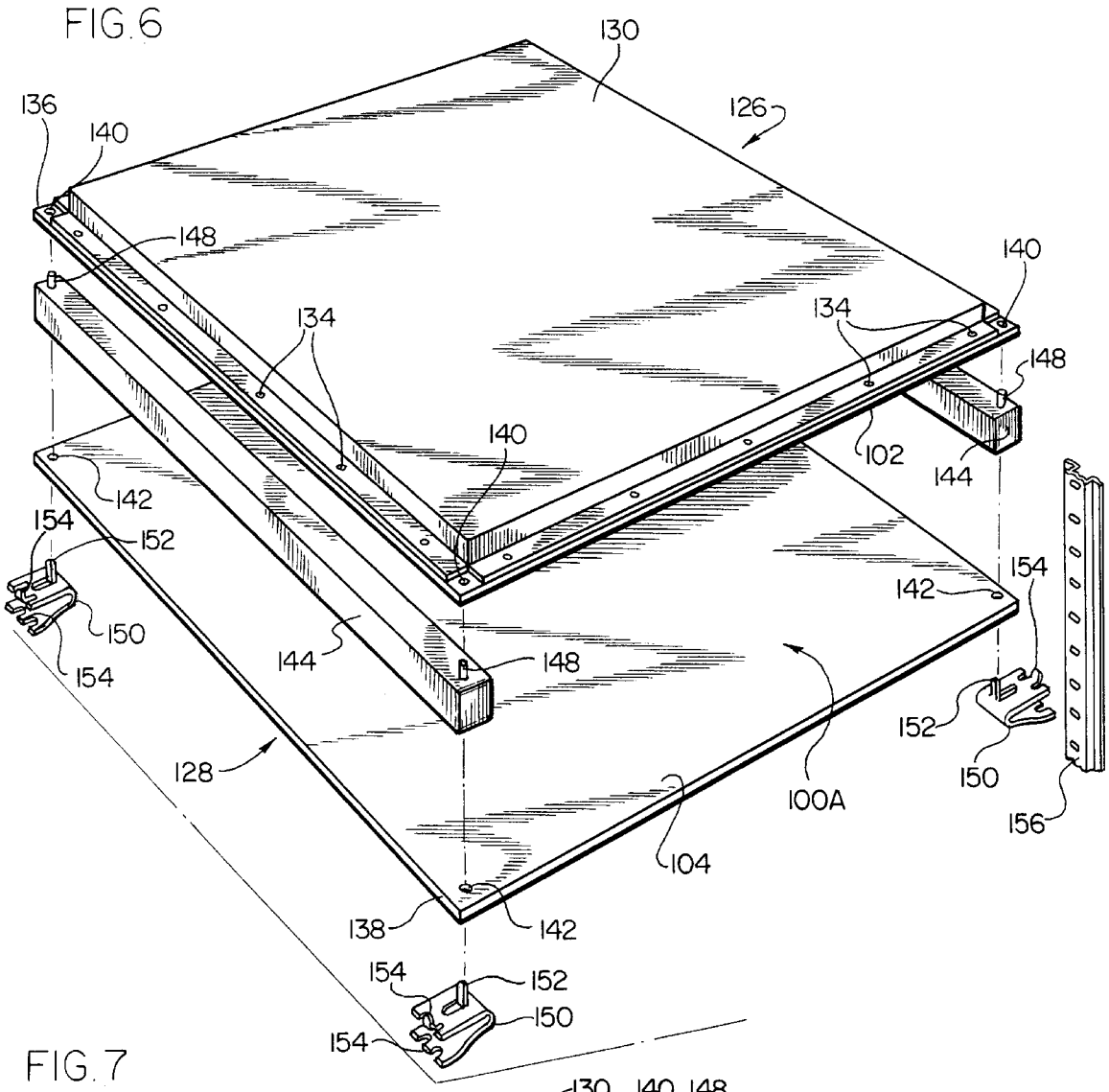
130
126
136
140
148
134
140
134
148
102
144
142
154
152
150
154
144
148
142
154
152
150
128
100A
156
104
138
142
154
152
150
154

FIG. 7

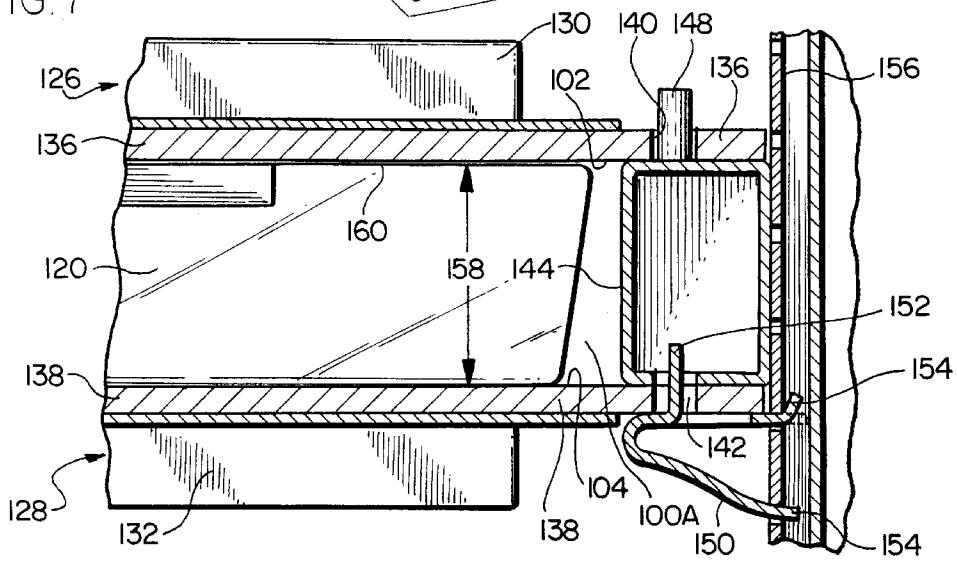
130
140
148
126
102
136
156
136
160
120
158
144
152
138
154
142
128
104
100A
132
138
150
154

FIG. 9

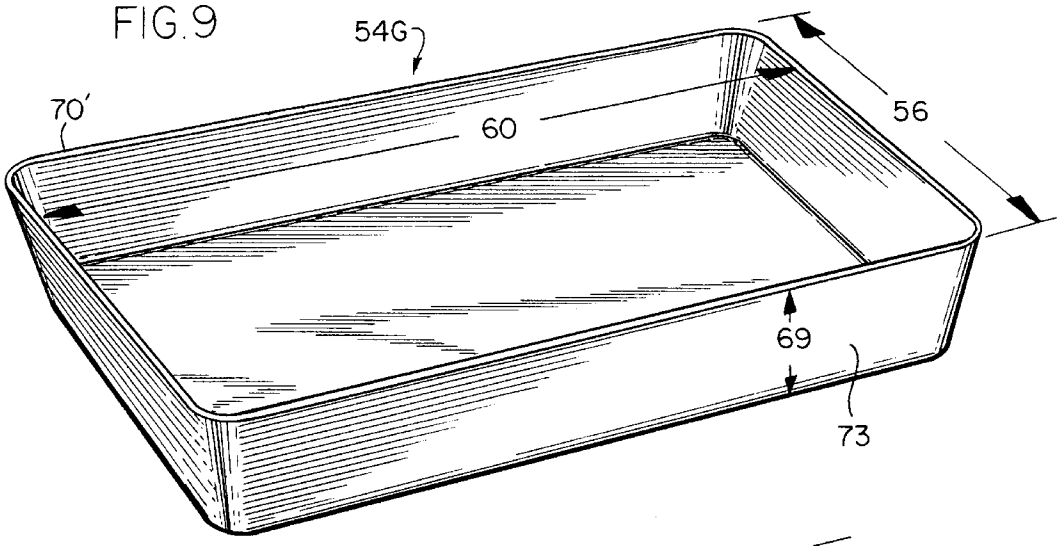

FIG. 10

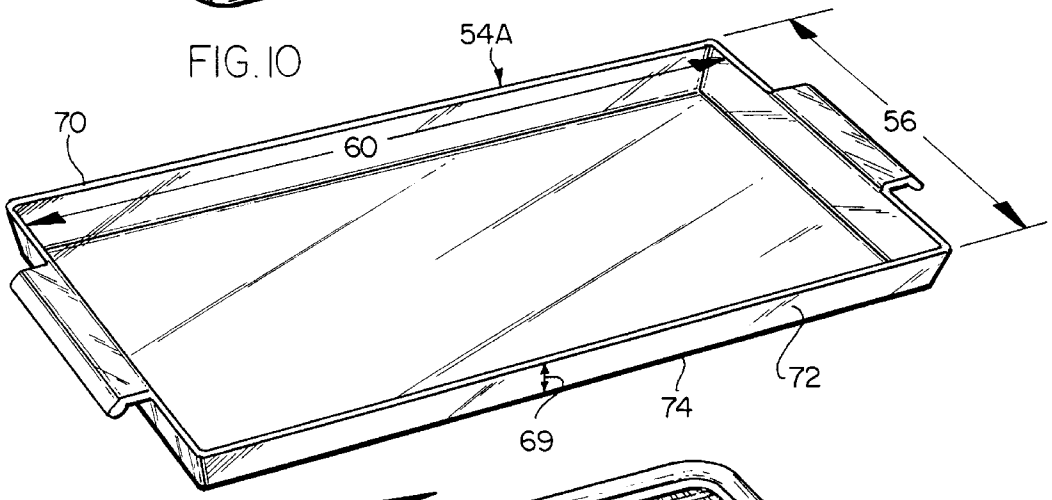

FIG. 11

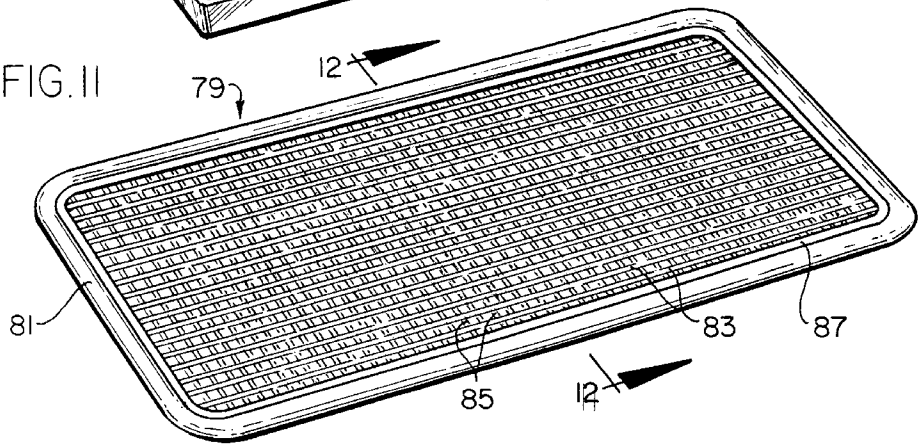

FIG. 12

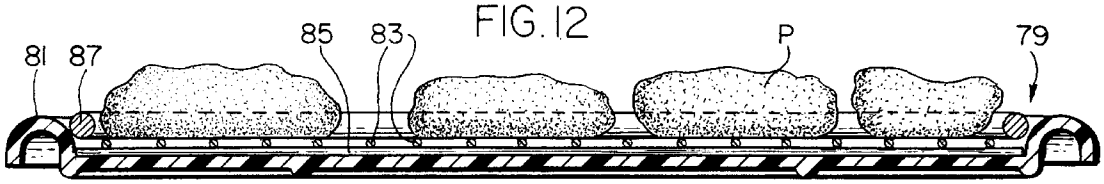

FIG. 13

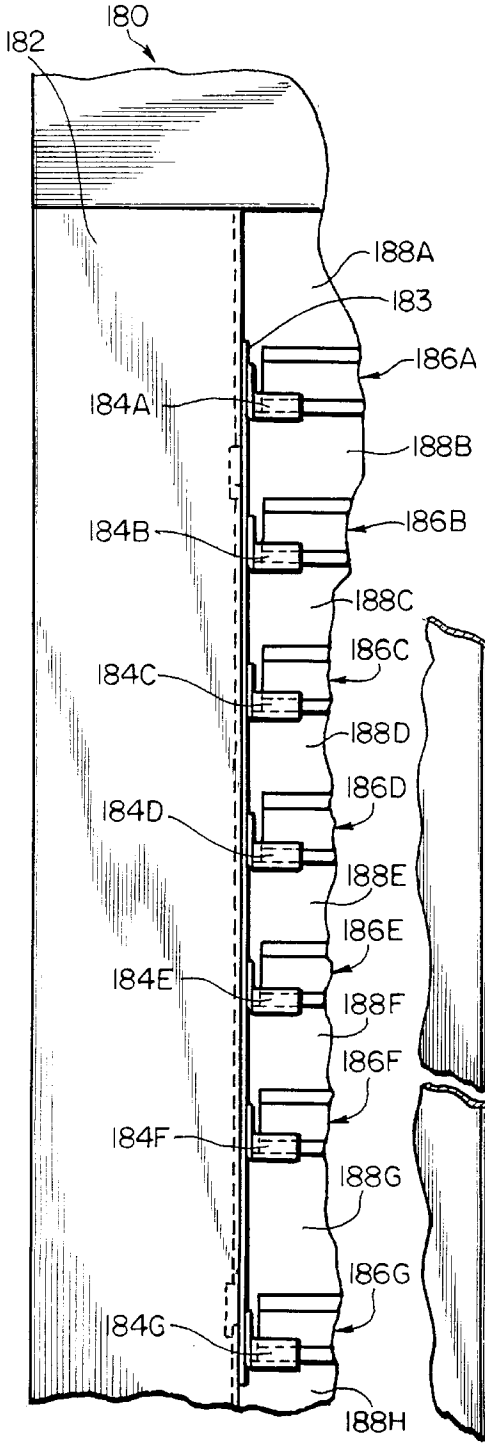

FIG. 15

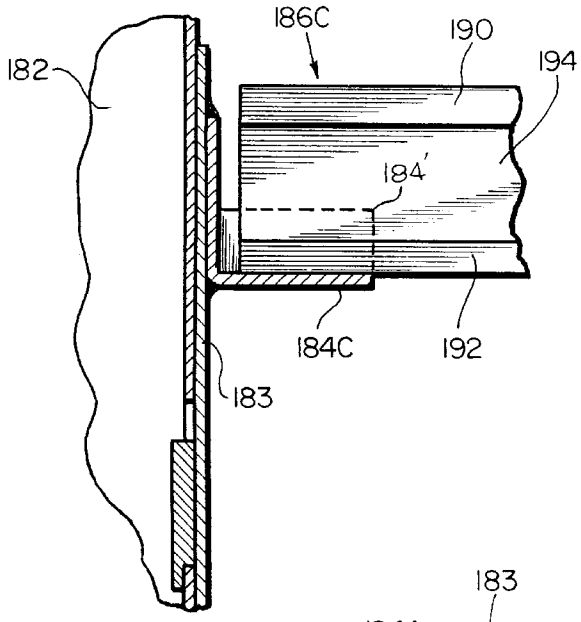

FIG. 14

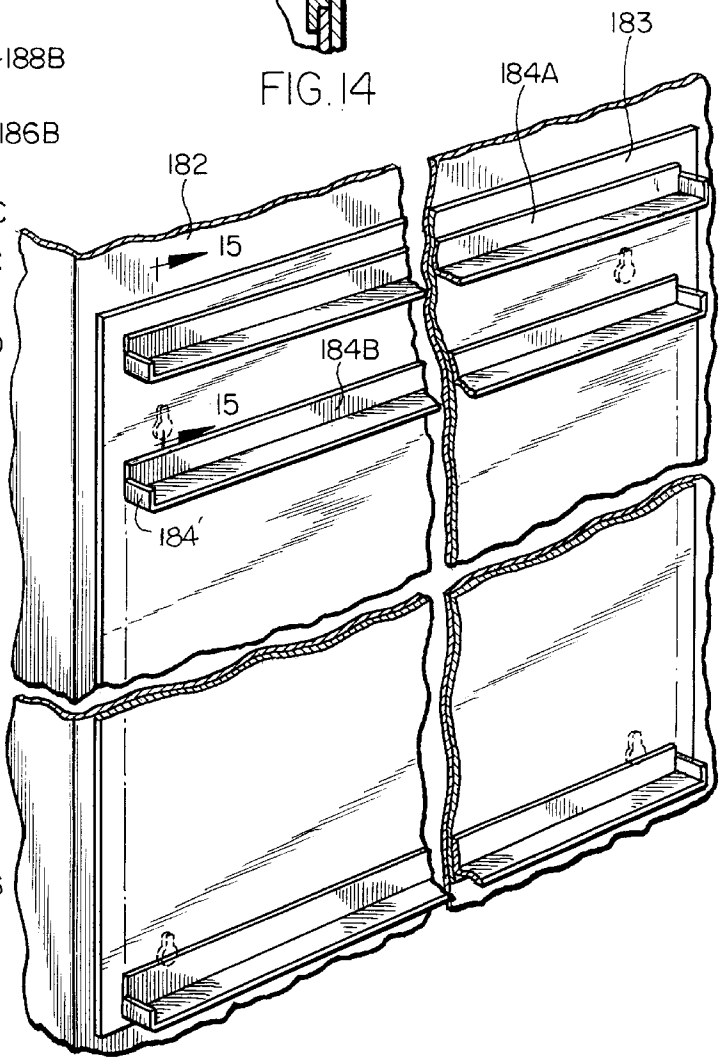

FIG.16

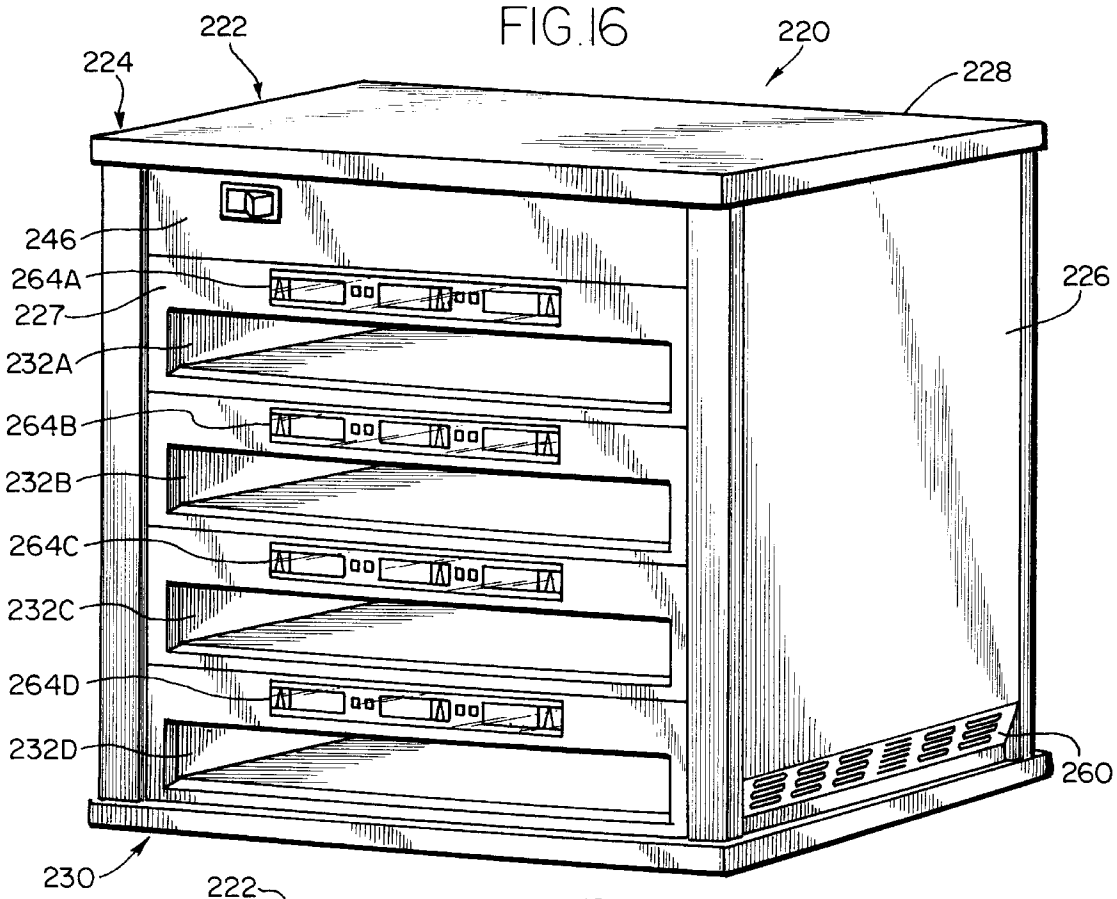
222
220
224
228
246
264A
227
226
232A
264B
232B
264C
232C
264D
232D
260
230

FIG.17

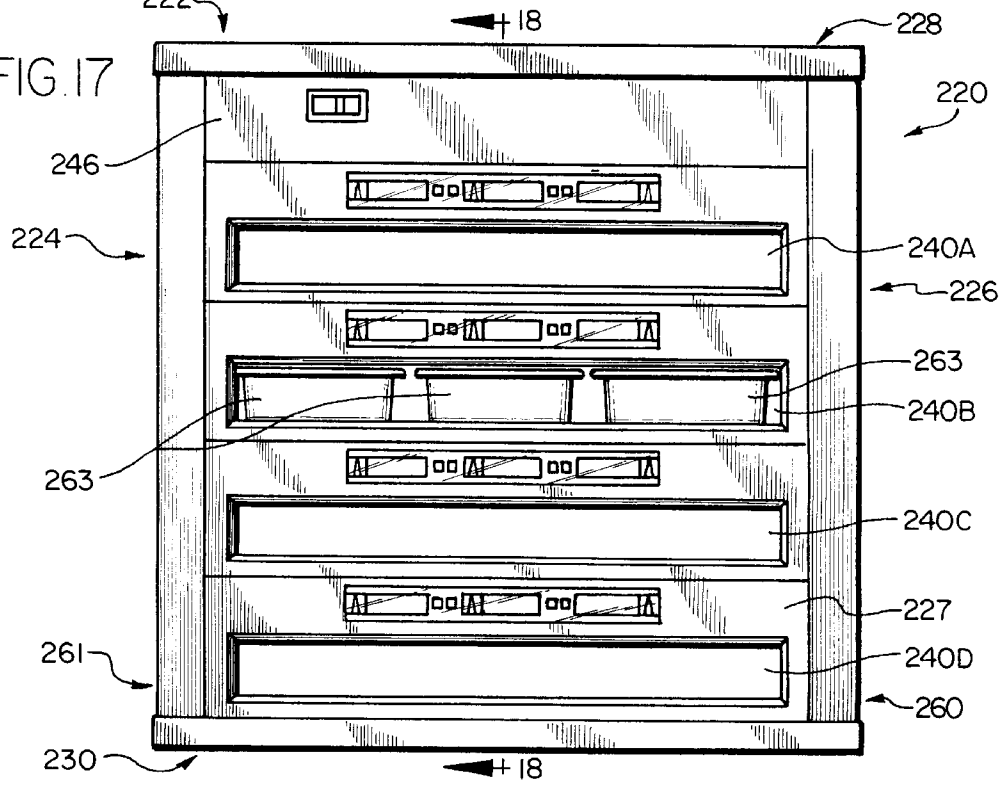
222
18
228
220
246
224
240A
226
263
240B
263
240C
227
261
240D
260
230
18

FIG. 18

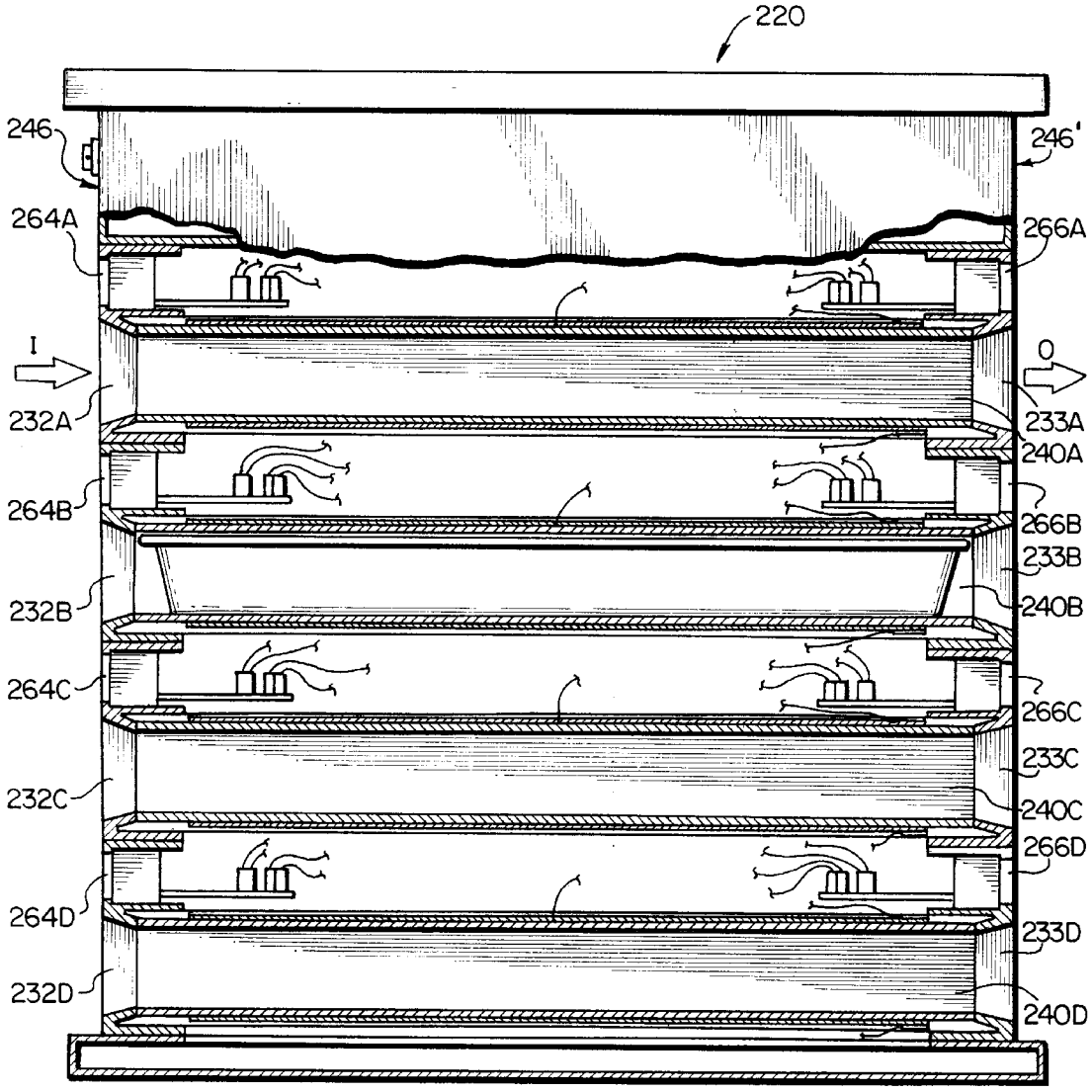
220
246
246'
264A
266A
I
O
232A
233A
240A
264B
266B
233B
232B
240B
264C
266C
233C
232C
240C
266D
264D
233D
232D
240D

FIG.19

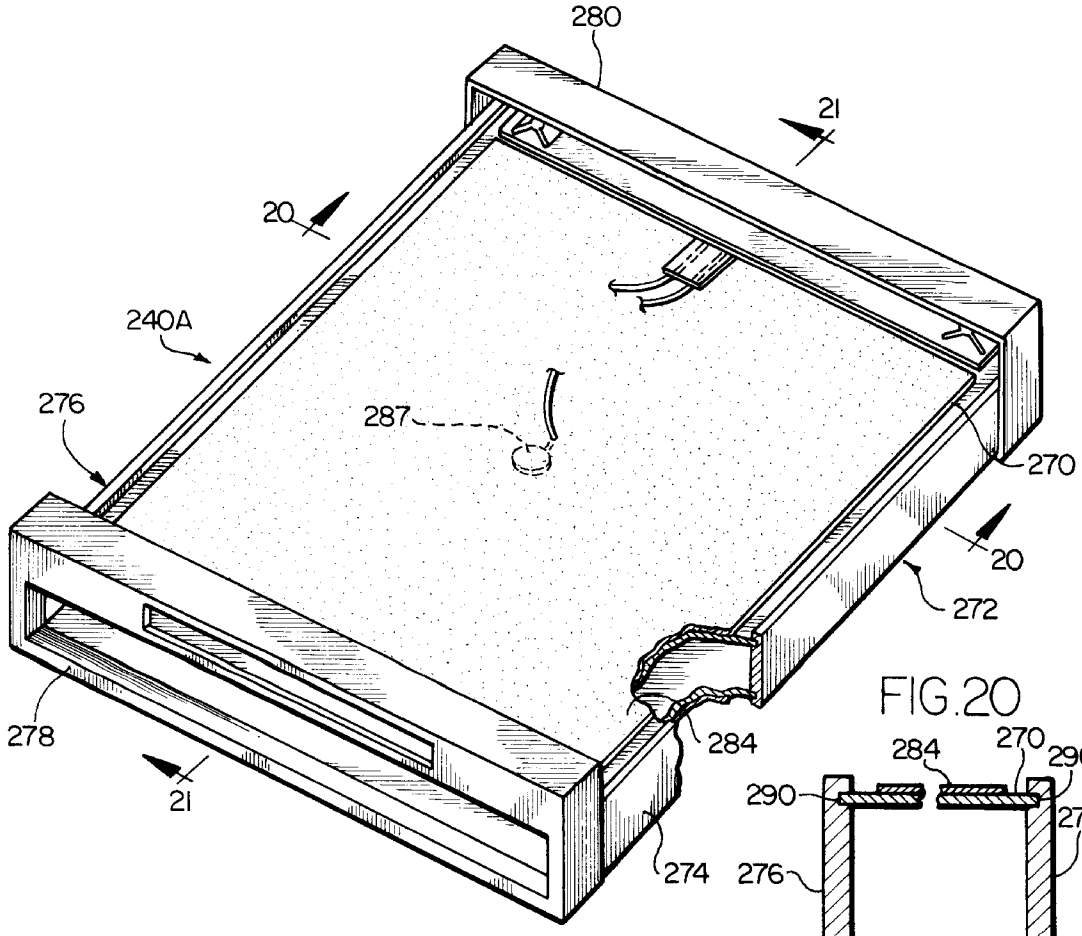

FIG.20

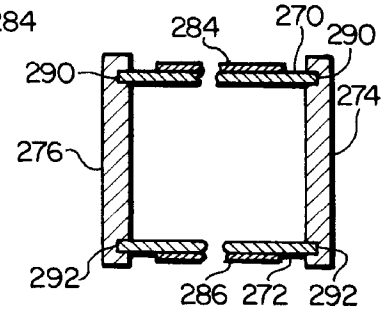

FIG.21

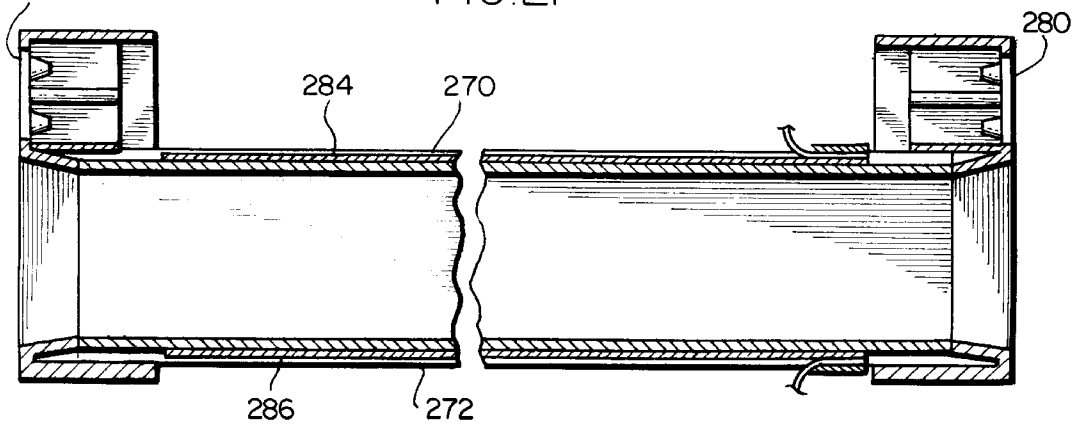

COOKED FOOD STAGING DEVICE AND METHOD

RELATED APPLICATION

This is a continuation-in-part of U.S. patent application Ser. No. 08/439,160, filed May 11, 1995, now abandoned.

FIELD OF THE INVENTION

This invention relates to a device and method for storing cooked food portions at elevated temperatures and more particularly to a staging device for holding previously cooked food portions at elevated temperatures.

BACKGROUND OF THE INVENTION

Quick service restaurants face a number of conflicting factors when striving to provide fast, palatable and safe food. First, the customers expect to receive their food quickly, with a minimum of delay and with predictable and constant high quality. Moreover, the rate of customer demand varies over time, with some periods, such as lunch and dinner times, having extremely high rates of customer demand. However, the kitchens of many quick service restaurants are of limited size and/or production capacity and thus necessarily have a limited number of food cooking devices.

Typical food products that are of most interest include sandwiches that are composed of a bun or other bakery cooked bread product and a sandwich filling that is cooked at the quick service restaurant. Typical sandwich fillings include hamburger patties, breaded fish fillets, Canadian bacon, pork sausage, eggs and breaded chicken patties, for example, as well as other products, such as chicken nuggets, biscuits, muffins and hotcakes. Consequently, the cooked food supply capacity of the restaurant is limited by the size and number of food cooking devices located at the restaurant.

To meet the competing factors of quick service and consistent high quality, it is advantageous for quick service restaurants to frequently cook a number of individual food sandwich filling portions which are then almost immediately incorporated into individual sandwiches and then wrapped and held ready in advance of actual customer orders in an open storage bin for a relatively short predetermined period of time. To insure constant high quality, if the items are not sold prior to the expiration of that time, the sandwiches are destroyed. Holding the previously cooked, prepared and wrapped sandwiches incorporating the previously cooked sandwich fillings is thus of limited utility.

Since some quick service restaurants sell very large quantities of food, even a small increase in the efficiency of handling cooked sandwich fillings and other food would be desirable.

A need exists for a device and method that acts as a buffer between the relatively fixed and limited capacity of the sandwich filling cooking step and the highly variable completed sandwich demand without any significant adverse impact on sandwich quality or food safety. In addition, a need also exists for a food staging device which promotes efficient food handling and use of space within the kitchen of the quick service restaurant.

SUMMARY OF THE INVENTION

In accordance with the present invention, an improved food staging device and method for holding previously cooked food items at elevated temperatures is provided.

The device is particularly adapted for storing over extended periods of time cooked sandwich fillings such as hamburger patties, fish fillets, Canadian bacon, pork sausage, eggs, chicken patties, chicken fillets, as well as other types of food, including biscuits, muffins and hotcakes. When used in combination with trays specifically configured for use in the staging device, the appearance, taste, and texture of the previously cooked food items is maintained over extended storage periods (such as about up to two hours depending on the type of food) without risk of bacterial contamination. In addition, the device provides a measure of quality control by insuring "doneness," which is defined as achieving the required health code temperature and coloration.

In accordance with another aspect of the invention, a method is provided for storing previously cooked food, that is especially suited for a plurality of individual portion sandwich fillings, over extended periods of time without any significant detrimental effect on the quality of the food, including the appearance, taste and texture and without risk of bacterial contamination.

In one aspect, the food staging device in accordance with the invention includes a cabinet containing a plurality of discrete compartments, each bounded by an upper heated compartment surface and a lower heated compartment surface. The upper and lower compartment surfaces are constructed from a material having a high thermal conductivity, preferably from anodized aluminum. The previously cooked food portions are held within the compartments until the food portions are sold or otherwise disposed of. The air currents throughout the cabinet, if any, are limited because each of the compartments is segregated from other compartments and has solid upper and lower surfaces as well as closed sidewalls and limited access doors, the combination of which limits air flow in the compartments. In addition, air currents within the compartments are limited because both the lower and upper surfaces of the compartments are heated, thereby minimizing regions of thermal gradients within the compartments.

The device also includes at least one inlet door on one side of the device for inserting the food portions into the compartments and one complementary outlet door on the opposite side of the device for removing therethrough food portions contained in the compartments. This pass-through configuration of the doors promotes an efficient use of space in the kitchen containing the device because, for example, the device can be positioned intermediate the food cooking area and the cooked food assembly area, thereby providing cooking and assembly restaurant personnel separate access to the device. One inlet and corresponding outlet door may be provided to service one, two or more compartments.

In accordance with another aspect of the invention, the device may include a plurality of opposed corresponding inlet and outlet doors such that each of the compartments has its own inlet and outlet door. In addition, the inlet and outlet doors preferably are vertically spaced apart from each other by a distance approximately equal to the thickness of the doors to enable the doors to open by swinging in a generally upward direction, without any further structure enclosing the cabinet interior in the area between adjacent doors from the exterior. Thus, there is provided a relatively narrow, elongated slot opening permitting limited air flow between the compartment of the device and the atmosphere. Typically, the slot height should be no more than about 0.25 inches. Using a separate inlet and outlet door for each compartment further limits air transfer between the interior of the device and the atmosphere, thereby limiting vapor transfer from the

cooked food articles contained therein and further protecting the appearance, taste, and texture of the food portions. The inlet and outlet doors preferably are attached to the cabinet by pins located at the upper opposed edges of the doors, enabling the doors to open by swinging in a generally upward direction. If desired, no stops are provided for holding the doors open. Consequently, the doors automatically close by their own weight, thereby further minimizing air transfer and promoting a relatively constant temperature within the compartments. Alternatively, a stop may be provided for each door as desired to hold it in an open position.

In another aspect, the food staging device in accordance with the invention includes a cabinet containing a plurality of discrete compartments, each bounded by an upper heated compartment surface and a lower heated compartment surface. However, no inlet or outlet doors are provided to the compartments, leaving open, unobstructed inlet and outlet areas. The upper and lower compartment surfaces are constructed from a material having a high thermal conductivity, preferably from anodized aluminum. Air currents throughout the cabinet, if any, are limited because each of the compartments is segregated from other compartments and has solid upper and lower surfaces as well as closed sidewalls and the trays configured for use in the compartments are sized to allow a minimum and controlled air gap between the top of the tray and the upper surface of the compartment. One inlet area is provided on one side of the device for inserting the food portions into the compartments and one complementary outlet area is provided on the opposite side of the device for removing therethrough food portions contained in the compartments. Generally, one inlet area and a corresponding outlet area are provided for access to each compartment. The unobstructed inlet and outlet areas provide cooking and assembly restaurant personnel quick access to the device for inserting and removing cooked food. Using a separate inlet and outlet area for each compartment limits air transfer between the interior of the device and the atmosphere, thereby limiting vapor transfer from the cooked food articles contained therein and further protecting the appearance, taste, and texture of the food portions.

In accordance with another aspect of the invention, the device includes a plurality of trays for containing the food portions. One type of tray includes a sidewall having an upper edge and a lower edge, a closed bottom attached to the lower edge, and an open top defined by the upper edge. The trays have a height such that the top edges of the trays are a predetermined vertical distance, generally in the range of from 0 to 0.090 inches and most preferably about 0.060 inches, from the upper heated compartment surface when the trays are inserted into the compartments, thereby creating a controlled, almost sealed section between the tray and the compartment. The preferred gap for biscuits and hotcakes is about 0.125 inches. A typical tray height is in the range from about 2 inches to about 2.5 inches. By limiting the space between the top edges of the trays and the upper compartment surface, and plate surface temperature, evaporation of liquid from the cooked food portions is minimized, thereby maintaining the appearance, taste, and texture of the cooked food held in the device over extended storage periods such as up to about two hours. In addition, the trays can be configured such that the length of the trays is less than but approximately equal to the depth of the compartments thereby enabling easy removal of the trays through the outlet area of the compartment.

Typical storage temperatures are in the range of from about 145–210° F. and preferably about 155° F. for biscuits, hamburger patties, grilled chicken, eggs, Canadian bacon, pork sausage, hotcakes and muffins, about 200° F. for breaded chicken nuggets, breaded chicken fillets and breaded fish fillets. Trays with solid bottoms and raised sides are preferred for unbreaded meat and other food products such as hamburger patties, grilled chicken, eggs, Canadian bacon, pork sausage, biscuits, muffins and hotcakes. Flat trays with a mesh or wire grid with medium sides are preferred for fried breaded products including breaded chicken nuggets, breaded chicken and fish fillets.

In accordance with yet another aspect of the invention, each of the compartments includes an upper electric resistance heating element for heating the upper compartment surface and a lower electric resistance heating element for heating the lower compartment surface. Additionally, temperature sensors are provided on the upper and lower compartment surfaces for monitoring the temperature of each surface. The temperatures generated by the heating elements therefore can be individually monitored and controlled by appropriate control circuitry. Consequently, the compartment temperatures can be separately controlled thus providing different holding temperatures in different compartments. As a result, the device can be used to simultaneously hold previously cooked food items at two or more temperatures, therefore eliminating the need for separate staging devices and further promoting an efficient use of space within the kitchen containing the staging device.

In accordance with another aspect of the invention, a method of storing previously cooked food products is provided. In accordance with this method, the previously cooked food products (such as individual portion sandwich fillings) are stored in a device that is composed of at least one compartment for holding the food portions, with the compartment bounded by upper and lower heated compartment surfaces. A cabinet defines an enclosed volume for housing the compartment therein, the cabinet including at least one area for inserting and removing the food portions from the compartment, where the compartment has a predetermined compartment height and width. The method includes placing the previously cooked sandwich fillings in at least one tray having a solid bottom and upwardly extending tray walls resulting in a tray height that is about 0 to 0.090 inches less than the compartment height. Thereafter, the tray containing the cooked sandwich fillings is placed in the heated compartment with the heated compartment surfaces having a temperature in the range of from about 145° F. to less than the boiling point of water. A gap is achieved between the top of the tray and the upper heated compartment surface between about 0 and 0.090 inches for restricting and controlling water vapor evaporating from the sandwich fillings contained in the tray. Thereafter, the inlet door is closed, if there is one, and the sandwich fillings in the tray are stored for a desired period of time.

Preferably, in accordance with the foregoing method, the cooked sandwich fillings stored in the tray fill at least about 5% and most preferably at least 50% of the tray volume.

BRIEF DESCRIPTION OF THE DRAWINGS

FIG. **1** is a perspective view of a cooked food staging device according to the invention;

FIG. **2** is a front elevational view of the device in FIG. **1**;

FIG. **3** is a partially cut-away side elevational view of the device in FIG. **1** showing the placement of food-containing trays within the device;

FIG. **4** is a partially cut-away front elevational view of a second cooked-food staging device according to the invention;

FIG. **5** is a partially cut-away side elevational view of the device in FIG. **4**;

FIG. **6** is an exploded view of two of the heated shelves within the device in FIG. **4**;

FIG. **7** is a sectional view taken along line **7**—**7** in FIG. **5** showing the attachment of the shelves to the cabinet of the device in FIG. **4**;

FIG. **8** is a partial perspective view of a portion of the food staging device of FIG. **1**;

FIG. **9** is a perspective view of a tray for use in the device of FIG. **1**;

FIG. **10** is a perspective view of an alternative tray used in the device;

FIG. **11** is a perspective view of a wire grid support used in the device;

FIG. **12** is a sectional view of the wire grid support of FIG. **11** taken along line **12**—**12** of FIG. **11** and having schematic food portions depicted thereon;

FIG. **13** is a partial elevational view of the interior of a cooked food staging device according to the invention and showing an alternative means for securing shelves within the device;

FIG. **14** is a perspective view of the interior of the device in FIG. **13**;

FIG. **15** is a sectional view of a portion of the interior of the device in FIG. **13** taken along line **15**—**15** of FIG. **14** and showing a shelf therein;

FIG. **16** is a perspective view of a third cooked food staging device according to the invention;

FIG. **17** is a front elevational view of the device in FIG. **16**;

FIG. **18** is a partial sectional view of the device taken along line **18**—**18** in FIG. **17**;

FIG. **19** is a perspective view of a compartment of the device in FIG. **16**;

FIG. **20** is a sectional view taken along line **20**—**20** in FIG. **19**; and

FIG. **21** is a sectional view taken along line **21**—**21** in FIG. **19**.

DETAILED DESCRIPTION

Referring to the Figures generally, where like reference numerals refer to like structure, and in particular to FIGS. **1**–**3**, there is illustrated a cooked food staging device **20** according to the invention. Device **20** includes a cabinet **22** having two sidewalls **24** and **26**, a closed top **28**, and a closed bottom **30**. As shown in FIG. **1**, device **20** may be supported by a separate support structure **31**. Alternatively, device **20** may rest directly on the floor (not shown) where codes permit or on a table (not shown) via bottom **30**. Front **27** of device **20** also includes vertically spaced apart inlet doors **32**A–E and **34**A–B, located on inlet side I of device **20**, as illustrated in FIG. **3**. Inlet doors **32**A–E swing open upwardly and generally are all the same width and height. Inlet doors **34**A–B, however, are larger than inlet doors **32**A–E to provide access to larger holding compartments for larger cooked food items, such as biscuits **36**, as shown in FIG. **3**. Alternatively, all inlet doors can have the same dimensions. As shown in FIG. **3**, device **20** also includes outlet doors **33**A–E, located opposite inlet doors **32**A–E, and outlet doors **35**A–B, located opposite inlet doors **34**A–B. For each inlet door **32**A–E or **34**A–B there is a corresponding outlet door **33**A–E or **35**A–B located on outlet side O of device **20** as illustrated in FIG. **3**. Each of inlet doors **32**A–E and **34**A–B, as well as outlet doors **33**A–E and **35**A–B, are hinged to cabinet **22** along their upper edges and can include a reinforcing member **38** (shown in FIGS. **1**–**3** and **8**) attached to their upper edges. Reinforcing members **38** generally are U-shaped channels extending along the length of each door **32**–**35**, with the top portion of each door **32**–**35** being disposed in a force-fit relationship in the channel portion of its respective reinforcing member **38**. Each of reinforcing members **38** has ends **39** that are closed as illustrated in FIGS. **2** and **8** and each has a pin **39'** mounted thereto and extending parallel to the length of member **38**. Each pin **39'** is disposed in a corresponding aperture (not shown) in cabinet **22**, to provide the hinging mechanism for doors **32**–**35**.

Raising doors **32**A–E, **33**A–E, **34**A–B and **35**A–B provides access into the discrete, heated compartments **40**A–E and **42**A–B, respectively, contained within cabinet **22**, as best seen in FIG. **3**.

Doors **32**A–E, **33**A–E, **34**A–B and **35**A–B include handles **44** to facilitate opening doors **32**A–E, **33**A–E, **34**A–B and **35**A–B to gain access to compartments **40**A–E and **42**A–B. Doors **32**A–E, **33**A–E, **34**A–B and **35**A–B do not include any stop members which would retain them in an open position. Each of doors **32**A–E, **33**A–E, **34**A–B and **35**A–B thus moves to a closed position under its own weight when its respective handles **44** are released, thereby preventing sustained heat losses from compartments **40**A–E and **42**A–B. Each door is spaced apart from its adjacent door(s) by a predetermined distance approximately equal to and slightly greater than the thickness of the lower of the two doors. For example, as seen in FIG. **2**, door **34**B is spaced apart from adjacent door **34**A by a distance **37** which is approximately equal to the thickness of door **34**B. In a preferred embodiment, the door thickness is about 0.25 inches and distance **37** is slightly greater than about 0.25 inches. Cabinet **22** can also include a fixed upper front panel **46** located above top inlet door **32**A and a fixed lower front panel **48** located below bottom inlet door **34**B, as seen in FIGS. **1** and **2**. Similar panels **46'** and **48'** are provided for the outlet side O of device **20**. A control keyboard **50** and a display **52** located along panel **46** are operatively connected to the control circuitry of device **20** and enable programming and monitoring of the temperatures and times within each of the heated compartments **40**A–E and **42**A–B.

Preferably, control keyboard **50** controls a microprocessor controller (not shown) that is programmed in a known manner to provide the desired temperature control, time control and display information. Preferably, each of compartments **40**A–E and **42**A–B is programmable to a desired set point temperature within the specified temperature range for upper and lower heated surfaces **64** and **66**, depending on product type.

If desired, a separate display can be provided for breakfast, lunch and dinner types of food. The display can be divided into a series of rows and columns, each row corresponding to one of compartments **40**A–E and **42**A–B. Each column corresponds to a horizontal tray position. For example, as shown in FIG. **2**, there are five horizontal tray positions (trays **54**A–E) and seven compartments resulting in a display having seven rows and five columns. Each column and row can be set to display the row and column number, the name of product stored in that position in device **20** and the countdown hold time remaining for that particular product. Preferably, the row and column display with the lowest time remaining for that product will be highlighted on the display so that the operator can select that tray first.

When a product type is selected for a particular row and column, the desired temperature set points are implemented

for the corresponding upper and lower heated surfaces **64** and **66**. The microprocessor controller checks the other columns (positions) in that row (shelf) for compatible temperatures considering food products already in storage on that shelf, and if not compatible, an audible beep can be generated, the input not accepted and "incompatible product selection" or other warning as desired displayed on display **52**. For example, chicken nuggets (200° F. storage temperature) should not be stored on the same shelf with hamburger patties (170° F. storage temperature.)

FIG. **2** shows device **20** with inlet door **32**B raised to provide access to trays **54**A–E within compartment **40**B. For ease of handling by a person, trays **54**A–G preferably are constructed from a material having a low heat capacity, such as polycarbonate. Preferably, each of trays **54**A–E, as well as trays **54**F–G shown in FIG. **3**, has a width **56** smaller than the width **58** of compartments **40**A–E and **42**A–B to permit placing more than one tray within a compartment. FIGS. **9** and **10** depict trays **54**G and **54**A, respectively. In the preferred embodiment shown in FIG. **2**, width **56** is chosen relative to width **58** such that five trays **54**A–E will fit within any of compartments **40**A–E and **42**A–B. In addition, each of the trays has a length almost equal to the depth **62** of compartments **40**A–E and **42**A–B, as seen in FIG. **3**. For example, tray **54**F is of length **60**.

Each of compartments **40**A–E and **42**A–B is bounded by an upper heated compartment surface **64**A–G and a lower heated compartment surface **66**A–G, as shown in FIG. **3**. Each of lower heated compartment surfaces **66**A–G is flat and substantially horizontal to provide uniform heat transfer to trays **54**A–G and permit easy sliding of those trays along the surface of lower heated compartment surfaces **66**A–G. Each of trays **54**A–F has a height **68** defined by the distance between the upper edge **70** of the sidewall **72** and the lower edge **74** of sidewall **72** of trays **54**A–F. Height **68** is chosen so that upper edge **70** of any of trays **54**A–F is at a predetermined distance **76** from upper compartment surfaces **64**A–F when trays **54**A–F are placed within compartments **40**A–E so that vapor transfer out of the interior of the trays is minimized, thereby also minimizing the fluid loss of the cooked food portions stored therein which is important for cooked food stored in trays **54** such as egg products, hamburger patties, grilled chicken, pork sausage and Canadian bacon. Preferably for such food, the cooked food portions fill more than about 5% and more preferably about 17–50% or more of the volume of trays **54** when stored in device **20**. Generally, minimal vapor transfer is achieved out of the interior of the trays when distance **76** is in the range of 0–0.090 inches. Most preferably, height **68** is chosen so that the distance **76** is approximately 0.060 inches (0.125 inches for biscuits). In the embodiment shown in FIGS. **1–3**, compartments **42**A–B are of greater height than compartments **40**A–E to accommodate larger food portions such as biscuits **36**. Consequently, when trays **54**A–F are placed within compartments **42**A–B, upper edges **70** are at a substantial distance greater than distance **76** from upper heated compartment surfaces **64**F–G. Sidewall **73** of tray **54**G has an increased height **69** so that a gap **77** is provided between the upper edge **70'** of tray **54**G and upper heated compartment surface **64**G. Gap **77** is about 0.060 inches (0.125 inches for biscuits).

For cooked, breaded food such as breaded chicken nuggets, breaded fish and chicken fillets, achieving minimal vapor transfer is usually not desirable because such food may have a tendency to become soggy. Sogginess is usually objectionable for cooked, breaded food products. Consequently, a larger gap than distance **76** should be employed such as at least 1.0 inch, for example. Alternatively, cooked, breaded food products may be stored within one or more of compartments **40**A–E or **42**A–B on a wire grid support or on a tray having a wire grid support therein. FIGS. **11–12** illustrate a wire grid support **79** that is suitable for supporting cooked, breaded food products within compartments **40**A–E and **42**A–B.

Wire grid support **79** comprises a tray **81** made of ultem or a similar material that houses a removable frame **87**. Frame **87** is connected to a grid having wires **83** and perpendicular wires **85** as shown in FIGS. **11** and **12**. Cooked, breaded food products P are placed on wire grid support **79** in order to provide air circulation beneath breaded food products P so that they do not become soggy. Wires **83** and **85** have a diameter of about 0.06 inches, thereby providing a spacing from the surface of tray **81** of about 0.250 inches. It is advantageous to minimize the distance from the heated surface yet still provide an air space from the heated lower compartment surfaces **66**A–G.

Returning now to FIG. **3**, upper heated compartment surfaces **64**A–G and lower heated compartment surfaces **66**A–G are constructed from a material having a high thermal conductivity and preferably are constructed from anodized aluminum.

The previously cooked food portions are held within compartments **40**A–E and **42**A–B, preferably within trays **54**A–G, until sold or otherwise disposed of. Because compartments **40**A–E and **42**A–B are discrete, with well-defined upper heated compartment surfaces **64**A–G and well-defined lower heated compartment surfaces **66**A–G, air currents throughout cabinet **22**, if any, are limited because surfaces **64**A–G and **66**A–G obstruct air flow within cabinet **22**. In addition, air currents within compartments **40**A–E and **42**A–B, if any, are limited because both upper heated compartment surfaces **64**A–G and lower heated compartment surfaces **66**A–G are heated thereby reducing or eliminating thermal incongruities within compartments **40**A–E and **42**A–B. By restricting the air currents throughout cabinet **22** and within compartments **40**A–E and **42**A–B, device **20** reduces the amount of moisture lost from the food portions held therein and thus protects the appearance, taste, and texture of the food portions. Evaporation of liquid from the food portions is further minimized by choosing height **68** of trays **54**A–F such that upper edges **70** of trays **54**A–F are at a small, predetermined distance **76**, generally preferably greater than 0 and less than about 0.090 inches and most preferably 0.060 inches, from upper compartment surfaces **64**A–E when trays **54**A–F are placed within compartments **40**A–E for minimizing vapor loss from the food contained therein. For increasing the amount of vapor loss, gap **77** can be increased.

Device **20** also promotes an efficient use of space within a kitchen containing device **20**. A kitchen in a quick service restaurant is frequently divided into two or more work areas. For example, the food cooking area can include food cooking devices such as grills, deep fat fryers, and other cooking devices, for example, for cooking sandwich fillings such as hamburger patties, fish fillets, chicken fillets, eggs and chicken nuggets. After being cooked, the food portions are transported to the sandwich assembly area for sandwich assembly which can include applying condiments to the cooked food portions, placing the cooked food portion in a roll or bun, and/or wrapping the cooked food portions. Consequently, restaurant personnel in the food cooking area and in the sandwich assembly area handle the cooked food portions. Device **20** promotes an efficient use of space when device **20** is located within the kitchen intermediate the food

cooking area and the sandwich assembly area. When so positioned, the restaurant personnel responsible for cooking can place a tray **54**E containing the cooked food portions within compartment **40**A through inlet door **32**A of device **20** of inlet side I, as shown in FIG. **3**. Then, when the cooked food portions are needed for assembly into a sandwich, restaurant personnel remove tray **54**E from compartment **40**A through outlet door **33**A of outlet side O of device **20**, as shown in FIG. **3**. The flow-through configuration of inlet doors **32**A–E and outlet doors **33**A–E thus enables the cooking and assembly personnel to have completely separate access to cooked food portions held within device **20**. Of course, the cooked food portions may be removed through inlet door **32**A of inlet side I.

FIGS. **4** and **5** illustrate a second embodiment of a cooked-food staging device **80** according to the invention. Device **80** includes a cabinet **82** having two sidewalls **84**, **86**, a closed top **88**, a closed bottom **90**, an upper front panel **92**, a lower front panel **94**, and a right front panel **96**. Keyboards **114** and displays **116** are provided in right front panel **96** to program and monitor the temperatures within the holding chambers **100**A–F contained within cabinet **82**. Holding chambers **100**A–F are bounded by upper heated chamber surfaces **102** and lower heated chamber surfaces **104**. Chambers **100**A–F are also bounded by inlet doors **108**A–F and outlet doors **112**A–F hingedly attached along their upper surfaces to cabinet **82** in a manner as described previously with respect to device **20**. Doors **108**A–F and **112**A–F are lifted by grasping handles **118** to thereby gain access to chambers **100**A–F. In FIG. **4**, inlet doors **108**A and **108**B are raised to reveal trays **120** contained within chambers **100**A and **100**B. The width **122** of trays **120** is such that three trays **120** will fit within any of chambers **100**A–F. The length **124** of trays **120** is almost equal to the depth of chambers **100**A–F so that trays **120** may be readily handled through inlet doors **108**A–F and through outlet doors **112**A–F, as best seen in FIG. **5**. Cabinet **82** can also include a compartment **98** for holding non-heated food portions. Compartment **98** is bounded by an inlet door **106** and an outlet door **110**, both of which provide access to compartment **98**. Doors **106** and **110** include handles **118** for rotating doors **106** and **110** along their upper hinged edges.

FIGS. **6** and **7** illustrate one system for attaching upper heated chamber surfaces **102** and lower heated chamber surfaces **104** to cabinet **82**. Surfaces **102** and **104** are parts of shelves **126** and **128** which contain heating components for heating surfaces **102** and **104**. Preferably, the source of heat is an electric resistance heating element, the construction of which is well known in the art. In addition to surface **102**, shelf **126** includes a hollow housing **130** overlying surface **102**. The heating component is positioned within the space between housing **130** and surface **102**. Similarly, shelf **128** includes surface **104**, an underlying housing **132**, and a heating component positioned inside housing **132**. Surfaces **102** and **104** are attached to housings **130** and **132** by conventional methods, such as rivets **134**. Surfaces **102** and **104** extend beyond housings **130** and **132** to form flanges **136** and **138** which contain holes **140** and **142** for attaching shelves **126** and **128** to cabinet **82**. Surfaces **102** and **104** are separated by two spacers **144**, each of which includes posts **148** for engaging the holes of the overlying flange, for example, holes **140** of flange **136**. Clips **150** underlying shelf **128** include posts **152** for engaging holes **142** of flange **138**. Clips **150** also include prongs **154** for engaging shelf brackets **156** attached to sidewalls **84** and **86**.

As best seen in FIG. **7**, shelf **128**, including lower heated chamber surface **104**, is attached to clip **150** by inserting post **152** through hole **142** of flange **138**. Clip **150** in turn is attached to bracket **156** via prongs **154**. Spacer **144** is then positioned over shelf **128** and clip **150** so that post **152** is inserted into an opening in the bottom of spacer **144**. Finally, shelf **126** is aligned with and mounted on spacer **144** so that post **148** extends through hole **140** in flange **136**. The height **158** of trays **120** is chosen so that the top edges **160** of trays **120** are at a predetermined distance from upper heated chamber surfaces **102**, as previously described with respect to device **20**, when trays **120** are placed within chambers **100**A–F. However, since the height of chambers **100**A–F is determined by the height of spacers **144**, different chamber dimensions can be achieved by using differently sized spacers. Consequently, device **80** can be readily configured to provide holding chambers which can accommodate trays having various heights.

An alternative preferred embodiment device is depicted in FIGS. **13**–**15** as staging device **180**. Staging device **180** has an exterior sidewall **182** and an interior sidewall **183** attached thereto, as most clearly seen in FIG. **14** by any suitable structure, such as by a weld or fastener, for example. Angle irons **184**A–G are mounted to interior side wall **183** to support shelves **186**A–G. Each end of angle irons **184**A–G uses an upturned tab **184**' for preventing lateral movement of shelves **186**A–G when mounted thereon. Shelves **186**A–G define heated compartments **188**A–H.

FIG. **15** is an enlarged view of shelf **186**C, which is representative of the other shelves. Shelf **186**C includes an upper heated surface **190**, a lower heated surface **192** and a housing **194** for storing the heating components (not shown).

In use, device **80** can be positioned within the kitchen of a quick service restaurant in an area intermediate the food cooking area and the food finishing area. The flow-through design of inlet doors **106** and **108**A–F and outlet doors **110** and **112**A–F thus promotes an efficient use of space within the kitchen. Device **80** also protects the appearance, taste, and texture of cooked food portions held therein because the discrete upper and lower heated chamber surfaces **102** and **104** limit air currents within device **80**, thereby reducing or eliminating moisture losses from the food portions. In addition, electrical resistive heating elements can be used as the heating components for heating surfaces **102** and **104**. Such heating elements can be individually controlled by the control circuitry of device **80**. As a result, device **80** can be used to simultaneously hold previously cooked food portions at two or more temperatures, therefore eliminating the need for separate staging devices and further promoting an efficient use of space within the kitchen containing device **80**. Generally, the heated chamber surfaces will be maintained in the temperature range from about 145° F. to less than the boiling point of water during the period of time that the sandwich fillings are stored in the chambers.

In FIGS. **16**–**18** there is illustrated a third preferred embodiment of a cooked food staging device **220** according to the invention. Device **220** includes a cabinet **222** having two sidewalls **224** and **226**, a closed top **228**, and a closed bottom **230**. Sidewalls **224**, **226** have air vents **260**, **261** near closed bottom **230**. Front **227** of device **220** also includes vertically spaced apart inlet areas **232**A–D, located on inlet side I of device **220**, as illustrated in FIG. **18**. Inlet areas **232**A–D generally are all the same width and height. However, larger or smaller inlet areas or inlet areas of different heights and widths may be provided to access holding compartments for larger or smaller cooked food items. As shown in FIG. **18**, device **220** also includes outlet areas **233**A–D, located opposite inlet areas **232**A–D. For

each inlet area **232**A–D there is a corresponding outlet area **233**A–D located on outlet side O of device **220**. Inlet areas **232**A–D and outlet areas **233**A–D provide access into the discrete, heated compartments **240**A–D contained within cabinet **222**.

Cabinet **222** can also include a fixed upper front panel **246** located above top inlet area **232**A and a fixed upper front panel **246'** located above upper outlet area **233**A, as seen in FIGS. **16–18**. In the area of cabinet **222** behind upper front panels **246, 246'**, electronics and other equipment for cooked food staging device **220** may be housed. Preferably, power equipment, electronics for monitoring and controlling the temperature of the holding compartments, electronics for controlling the displays and a fan for circulating air through cabinet **222** via the side panel vents **260, 261** are housed behind fixed upper panels **246, 246'**.

Above each inlet area **232**A–D and each outlet area **233**A–D, are control and display areas **264**A–D and **266**A–D, respectively. As shown in FIG. **17**, the width of compartment **240**B is sized to hold three trays **263** representing three column positions in the compartment. Preferably, three displays are provided in control and display area **264**A–D and **266**A–D representing the three tray positions. The displays are programmed to alternatively display the type of food product held in the tray position and the time remaining for holding the cooked food item in the tray position. The control buttons are used to select a product type for a tray position and reset the time remaining. Preferably selecting the product type will automatically select the temperature and appropriate holding time. Most preferably, the control circuitry prevents cooked food items requiring different temperature settings from being placed in the same compartment by visually and/or audibly alerting personnel to this situation. Notably, control and display areas **264**A–D are replicated on outlet side O as control and display areas **266**A–D and are controllable from either inlet side I or outlet side O for the convenience of the restaurant personnel.

The heated compartments housed in cabinet **222** are preferably of a modular construction. FIG. **19** shows a perspective view of compartment **240**A of device **220**. Compartment **240**A is representative of compartments **240**B–D. Compartment **240**A is bounded by an upper heated compartment surface **270**, a lower heated compartment surface **272** and spacers **274, 276**. The upper heated compartment surface **270** and the lower heated compartment surface **272** are preferably made of black anodized aluminum. Bezzles or face plates **278, 280** are provided at the inlet side and outlet side of the compartment. The face plates **278, 280** form a portion of the front and back surfaces, respectively, of cabinet **222**. The face plates **278, 280** have openings coinciding with the inlet and outlet areas of the compartment and the control and display areas. The face plates **278, 280** are preferably injection molded. An electric resistance heating element **284** is adhesively attached to the top surface of upper heated compartment surface **270** and a similar heating element **286** is provided on the bottom surface of lower heated compartment surface **272**. A temperature sensor **287**, such as a thermal couple or thermistor, is preferably centrally located under heating element **284** to sense the temperature for the control circuitry. A similar temperature sensor (not shown) is provided under heating element **286**.

A preferred heating element is composed of a wire or other electrical resistance element confined between and insulated by two layers of silicon rubber material. The layers of silicon rubber material are bonded together and bonded to heated compartment surfaces **270, 272** by heating. The preferred heating element is approximately 1/16" thick and is available from Heatron of Leavenworth, Kans.

As discussed previously, an important aspect of the present invention is maintaining a minimal gap between the tray and the upper heating element of the compartment holding the tray. The heights of trays **263** are chosen so that the top edges of trays **263** are at a predetermined distance from the upper heated surface. The lengths of trays **263** are almost equal to the depth of compartments **240**A–D. As shown in FIG. **20**, spacers **274, 276** preferably have extruded slots **290, 292** which receive the upper heated compartment surface **270** and lower heated compartment surface **272**, respectively. The slots **290, 292** are preferably extruded to maintain a precise height separating upper heated surface **270** from lower heated surface **272**. Thus, a tray may be sized to maintain the preferred minimum gap of 0.060 inches between the top edge of the tray and the upper heated surface.

An alternative to the embodiments of the cooked food staging device is to provide the cabinet with a closed back, eliminating the outlet side O and removing all associated access, displays and controls. Alternatively, the discrete heated compartments may be provided with a back or otherwise closed at the outlet side O. This alternative embodiment is particularly useful where the cooked food staging device is not placed in a location intermediate the food cooking area and the food assembly area. For example, in a quick service restaurant where there is very limited space, the alternative closed back embodiment may be used, allowing restaurant personnel access only from the inlet side.

Described herein is a device and method for storing cooked food portions at elevated temperatures. With the present invention, food may be stored for a limited period of time without any significant adverse impact on quality or safety. The invention promotes efficient food handling and use of space within the kitchen of a quick service restaurant. However, the invention need not be limited to use in a quick service restaurant. The invention is useful in cafeterias, commissary kitchens, and the like for all types of products such as chicken breast, prime rib, lasagna and vegetables.

Whereas the present invention has been described with respect to specific embodiments thereof, it will be understood that various changes and modifications will be suggested to one skilled in the art and it is intended that the invention encompass such changes and modifications as fall within the scope of the appended claims.

What is claimed is:

1. A device for holding a plurality of previously cooked food portions at elevated temperatures, comprising:

a plurality of compartments for holding the food portions, each of said plurality of compartments having a compartment height and being bounded by an upper heated compartment surface and a lower heated compartment surface;

a cabinet defining a volume that encloses said plurality of compartments therein, said cabinet including one inlet area for inserting the food portions into said compartment and an outlet area opposite said inlet area for removing the food portions contained in said plurality of compartments, said inlet and outlet areas located on opposed sides of said cabinet; and

at least one tray for containing the previously cooked food portions, said tray including a tray bottom and a tray sidewall, said tray sidewall extending upwardly from

said tray bottom and terminating at an upper edge, wherein said tray has a height that is zero to about 0.25 inches less than the height of at least one of said plurality of compartments such that when said tray is stored in said at least one of said plurality of compartments, evaporation of liquid from the cooked food portions contained within said tray is restricted.

2. The device in claim **1** wherein the height of said tray is approximately 0.060 inches less than the height of at least one of said plurality of compartments.

3. The device of claim **2** wherein the height of each of said plurality of compartments is about 2.5 inches.

4. The device in claim **1** wherein said at least one tray has a length that is less than and substantially equal to a depth of said plurality of compartments.

5. The device of claim **1** wherein said lower heated compartment surface is heated by a respective lower electric resistance heating element and said upper heated compartment surface is heated by a respective upper electric resistance heating element.

6. The device of claim **1** wherein said upper and lower heated compartment surfaces are substantially planar and horizontal.

7. A device for holding a plurality of previously cooked food portions at elevated temperatures, comprising:

a cabinet having a cabinet front, a cabinet rear, spaced-apart first and second opposed sidewalls, a top and a bottom;

an uppermost shelf and a lowermost shelf, said uppermost shelf comprising a lower heated surface and said lowermost shelf comprising an upper heated surface;

means for heating said upper and lower heated surfaces;

at least one interior shelf located above said lowermost shelf and below said uppermost shelf and comprising an upper surface, a lower surface vertically spaced apart from the upper surface, and heating means for heating said upper surface and said lower surface of said interior shelf, said heating means being located in the space between said upper surface and said lower surface of said interior shelf;

an upper holding chamber and a lower holding chamber for containing cooked food portions, said upper holding chamber being bounded and heated by a lower heated chamber surface defined by the upper surface of the interior shelf and an upper heated chamber surface defined by the lower heated surface of the uppermost shelf, said lower holding chamber being bounded and heated by a lower heated chamber surface defined by said upper heated surface of the lowermost shelf, and an upper heated chamber surface defined by said lower surface of said interior shelf;

upper and lower inlet areas located in said cabinet front for inserting the food portions into said upper and lower holding chambers, respectively; and

upper and lower outlet areas opposite said upper and lower inlet areas, respectively, and located in said cabinet rear, for removing the cooked food portions from said upper and lower holding chambers, respectively; and

an upper tray for containing the previously cooked food portions, said upper tray comprising a bottom and a sidewall extending upwardly from said bottom, said sidewall defining an upper tray height that is in the range of from about 0 inches to about 0.25 inches less than the height of said upper holding chamber; and

a lower tray for containing the previously cooked food portions, said lower tray comprising a bottom and a sidewall extending upwardly from said bottom, said sidewall defining a lower tray height that is in the range of from about 0 inches to about 0.25 inches less than the height of said lower holding chamber.

8. The device of claim **7** wherein said upper holding chamber has a first height and said lower holding chamber has a second height and said first height is different from said second height.

9. The device of claim **8** wherein said upper tray height is approximately 0.060 inches less than the first height of said upper holding chamber and said lower tray height is approximately 0.060 inches less than the second height of said lower holding chamber.

10. The device of claim **8** wherein the length of said upper and lower trays is less than and substantially equal to a depth of said upper and lower holding chambers, respectively.

11. The device of claim **7** wherein said means for heating said interior shelf and said means for heating said uppermost and lowermost shelves each comprises at least one electric resistance heating element.

12. A method of storing previously cooked food portions in a device having at least one heated compartment for holding the food portions bounded by upper and lower heated compartment surfaces, and a cabinet defining an enclosed volume for containing the compartment therein, the cabinet including at least one area for inserting and removing the food portions into the compartment, the compartment having a compartment height and a compartment width, comprising the steps of:

placing the previously cooked food portions in a tray having a tray height that is about 0 to 0.090 inches less than the compartment height;

placing the tray containing the cooked food portions in the heated compartment, the heated compartment surfaces having a temperature in the range of from about 145° F. to less than the boiling point of water and achieving a gap between about 0 and 0.090 inches between the top of the tray and the upper heated compartment surface for restricting water vapor evaporating from the food portions contained in the tray; and

storing the food portions in the tray in the compartment for a desired period of time.

13. The method of claim **12** wherein the step of placing the food portions in a tray comprises placing sufficient food portions in the tray to fill at least 5% of the volume of the tray.

14. The method of claim **12** wherein the step of placing the food portions in a tray comprises placing sufficient food portions in the tray to fill at least 50% of the volume of the tray.

15. The method of claim **12** further comprising the step of maintaining the heated compartment surfaces in the temperature range of from about 145° F. to less than the boiling point of water during the period of time that the food portions are stored in the compartment.

* * * * *