US009980322B1

(12) **United States Patent**
Kestner et al.

(10) **Patent No.: US 9,980,322 B1**
(45) **Date of Patent: May 22, 2018**

(54) **MULTI-ZONE FOOD HOLDING BIN**

(71) Applicant: **PRINCE CASTLE, LLC**, Carol Stream, IL (US)

(72) Inventors: **Kyle Thomas Kestner**, Schaumburg, IL (US); **Christopher B. Lyons, Jr.**, Lagrange, IL (US); **Charles B. Hartfelder**, Hanover Park, IL (US); **Zachary N. McCoy**, South Elgin, IL (US)

(73) Assignee: **PRINCE CASTLE LLC**, Carol Stream, IL (US)

(*) Notice: Subject to any disclaimer, the term of this patent is extended or adjusted under 35 U.S.C. 154(b) by 0 days. days.

(21) Appl. No.: **15/133,220**

(22) Filed: **Apr. 19, 2016**

(51) **Int. Cl.**

A47J 36/24	(2006.01)
A47J 39/02	(2006.01)
H05B 3/00	(2006.01)
F24C 7/04	(2006.01)
F24C 15/16	(2006.01)
A47J 39/00	(2006.01)
F24C 15/18	(2006.01)

(52) **U.S. Cl.**
CPC ***H05B 3/0076*** (2013.01); ***A47J 36/2483*** (2013.01); ***A47J 36/2488*** (2013.01); ***A47J 39/006*** (2013.01); ***F24C 7/043*** (2013.01); ***F24C 15/16*** (2013.01); ***F24C 15/18*** (2013.01)

(58) **Field of Classification Search**
None
See application file for complete search history.

(56) **References Cited**

U.S. PATENT DOCUMENTS

D63,818	S	1/1924	Curtiss
2,386,919	A	10/1945	Tobey
2,900,806	A	8/1959	Wurtz et al.
2,934,913	A	5/1960	Haines et al.
3,042,384	A	7/1962	Bauman
3,275,393	A	9/1966	Stentz et al.
3,301,618	A	1/1967	Feldser et al.
3,308,633	A	3/1967	Kritzer, Jr.
3,414,709	A	12/1968	Tricault
3,696,720	A	10/1972	Vinson
3,950,632	A	4/1976	Rivelli
3,979,056	A	9/1976	Barnes
D243,362	S	2/1977	Shumrak et al.
4,036,995	A	7/1977	Koether et al.

(Continued)

FOREIGN PATENT DOCUMENTS

JP	8000414	1/1996
JP	10079088	3/1998

(Continued)

OTHER PUBLICATIONS

"Modular Holding Cabinets", Product Catalog, Carter-Hoffmann, Mundelein, Illinois (Jan. 2014).

(Continued)

Primary Examiner — Joseph M Pelham
(74) *Attorney, Agent, or Firm* — Marshall, Gerstein & Borun LLP

(57) **ABSTRACT**

A multi-zone food holding bin has a continuous food supporting surface with multiple food holding zones. Each food holding zone is independently controllable so that different food temperatures may be maintained in adjacent food holding zones.

10 Claims, 6 Drawing Sheets

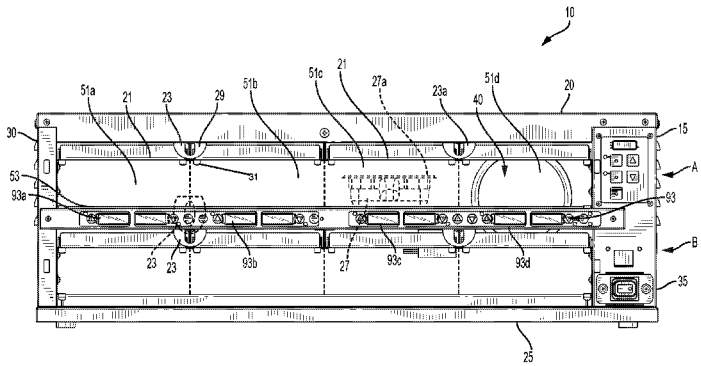

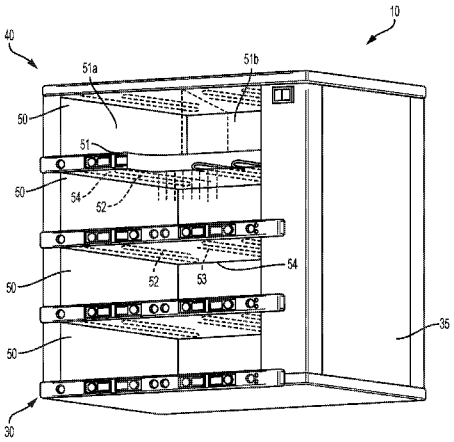

Duke Manufacturing Co. EX1001
U.S. Patent No. 9,980,322

(56) **References Cited**

U.S. PATENT DOCUMENTS

4,077,690 A 3/1978 Koether
4,278,872 A 7/1981 Koether et al.
4,306,616 A 12/1981 Woods, Jr. et al.
4,355,521 A 10/1982 Tsai
4,388,689 A 6/1983 Hayman et al.
4,530,067 A 7/1985 Dorr
4,569,421 A 2/1986 Sandstedt
4,610,238 A 9/1986 Veth
4,633,230 A 12/1986 Tam
4,644,931 A 2/1987 Veth
4,688,475 A 8/1987 Witt et al.
4,740,888 A 4/1988 Ceste, Sr. et al.
4,742,455 A 5/1988 Schreyer
4,782,445 A 11/1988 Pasquini
4,812,625 A 3/1989 Ceste, Sr.
4,812,963 A 3/1989 Albrecht et al.
4,864,498 A 9/1989 Pasquini et al.
4,911,068 A 3/1990 Koether et al.
4,922,435 A 5/1990 Cahlander et al.
5,003,472 A 3/1991 Perrill et al.
5,069,273 A 12/1991 O'Hearne
5,093,556 A 3/1992 Oelfke
5,128,862 A 7/1992 Mueller
5,132,914 A 7/1992 Cahlander et al.
5,172,328 A 12/1992 Cahlander et al.
5,188,020 A 2/1993 Buchnag
5,216,918 A 6/1993 Landis et al.
5,218,527 A 6/1993 Ishikawa et al.
5,247,807 A 9/1993 Jarman et al.
5,253,564 A 10/1993 Rosenbrock et al.
D341,054 S 11/1993 Maputol
5,357,426 A 10/1994 Morita et al.
D364,530 S 11/1995 Robards, Jr. et al.
5,485,780 A 1/1996 Koether et al.
D369,269 S 4/1996 Labadia Del Fresno
5,504,589 A 4/1996 Montague et al.
5,510,979 A 4/1996 Moderi et al.
5,539,671 A 7/1996 Albrecht et al.
5,553,312 A 9/1996 Gattey et al.
5,579,952 A 12/1996 Fiedler et al.
5,590,586 A 1/1997 Ulfig et al.
5,594,222 A 1/1997 Caldwell
5,616,269 A 4/1997 Fowler et al.
5,653,906 A 8/1997 Fowler et al.
5,724,886 A 3/1998 Ewald et al.
5,772,072 A 6/1998 Prescott et al.
5,783,803 A * 7/1998 Robards, Jr. A47J 39/00 219/385
5,812,393 A 9/1998 Drucker
5,900,173 A 5/1999 Robards, Jr.
5,921,096 A 7/1999 Warren
5,931,083 A 8/1999 Stanger et al.
5,939,974 A 8/1999 Heagle et al.
5,944,324 A 8/1999 Schultheis et al.
5,947,012 A 9/1999 Ewald et al.
6,000,622 A 12/1999 Tonner et al.
6,006,996 A 12/1999 Bhatnagar
6,011,243 A 1/2000 Arnold et al.
6,026,372 A 2/2000 Savage
6,031,208 A 2/2000 Witt et al.
6,052,667 A 4/2000 Walker et al.
D427,008 S 6/2000 Wasner
D427,479 S 7/2000 Wasner
6,088,681 A 7/2000 Coleman et al.
6,114,659 A 9/2000 Finck et al.
6,116,154 A 9/2000 Vaseloff
6,119,587 A 9/2000 Ewald et al.
D434,265 S 11/2000 Tatlow
6,153,244 A 11/2000 Stanger et al.
6,158,885 A 12/2000 Landis
6,175,099 B1 1/2001 Shei et al.
6,200,944 B1 3/2001 Dovey et al.
6,209,447 B1 4/2001 Ewald et al.
6,257,010 B1 7/2001 Shei et al.
6,261,621 B1 7/2001 Stanger et al.
6,262,394 B1 7/2001 Shei et al.
6,412,403 B1 7/2002 Veltrop
6,434,961 B2 8/2002 Richmond et al.
6,502,411 B2 1/2003 Okamoto
6,541,739 B2 4/2003 Shei et al.
6,637,322 B2 10/2003 Veltrop
6,658,994 B1 12/2003 McMillan
6,825,447 B2 11/2004 Kim et al.
6,834,276 B1 12/2004 Jensen et al.
6,878,391 B2 4/2005 Veltrop
6,884,451 B2 4/2005 Veltrop
7,028,498 B2 4/2006 Monroe et al.
7,105,779 B2 * 9/2006 Shei A21B 1/22 219/394
7,132,926 B2 11/2006 Vaseloff et al.
7,227,102 B2 6/2007 Shei
7,235,762 B2 6/2007 Gagas et al.
7,238,654 B2 7/2007 Hodge et al.
7,258,064 B2 8/2007 Vaseloff et al.
7,279,659 B2 10/2007 Gagas et al.
7,328,654 B2 * 2/2008 Shei A47J 39/006 219/385
RE40,151 E 3/2008 Shei et al.
RE40,290 E 5/2008 Shei et al.
7,376,485 B2 5/2008 Salerno
D570,715 S 6/2008 Di Federico
7,381,927 B1 6/2008 Agnello
7,385,160 B2 * 6/2008 Jones F24C 15/16 126/333
7,446,282 B2 11/2008 Shei et al.
7,628,107 B2 12/2009 Vaseloff et al.
7,762,636 B2 7/2010 Veeser et al.
7,858,906 B2 12/2010 Veltrop et al.
7,905,173 B2 * 3/2011 Sus F24C 15/166 219/214
8,091,472 B2 1/2012 Maciejewski et al.
8,096,231 B2 * 1/2012 Veltrop A47J 37/0623 219/385
8,247,745 B2 8/2012 Chung et al.
8,522,675 B2 * 9/2013 Veltrop A23L 3/005 219/214
9,003,820 B2 4/2015 Veltrop
2001/0007322 A1 * 7/2001 Shei A47J 39/006 219/399
2001/0053963 A1 12/2001 Kim et al.
2003/0118706 A1 6/2003 Veltrop
2004/0000162 A1 1/2004 Song
2004/0016242 A1 1/2004 Song et al.
2004/0019534 A1 1/2004 Callahan et al.
2004/0020915 A1 2/2004 Shei
2004/0060320 A1 4/2004 Roh et al.
2005/0211696 A1 9/2005 Adamski
2005/0236947 A1 10/2005 LeClear et al.
2006/0150662 A1 7/2006 Lee et al.
2007/0017245 A1 1/2007 Song et al.
2007/0144202 A1 6/2007 Theodos et al.
2007/0251397 A1 11/2007 Dorsten et al.
2008/0023462 A1 1/2008 Shei et al.
2008/0213449 A1 9/2008 Wisner et al.
2008/0302778 A1 * 12/2008 Veltrop A47J 39/006 219/385
2009/0045185 A1 2/2009 Schroeder et al.
2009/0266244 A1 10/2009 Maciejewski et al.
2009/0309027 A1 12/2009 Von Striver
2010/0205992 A1 8/2010 Morris
2011/0030565 A1 * 2/2011 Shei ..... A47J 39/006 99/329 P
2011/0253698 A1 10/2011 Theodos et al.
2011/0253703 A1 10/2011 Theodos et al.
2012/0079699 A1 4/2012 Veltrop et al.
2012/0285942 A1 11/2012 Godecker et al.
2013/0175253 A1 * 7/2013 Shei A21B 1/245 219/400
2014/0130684 A1 * 5/2014 Reese A47J 37/0629 99/483
2014/0150461 A1 6/2014 Veltrop
2014/0165644 A1 6/2014 Veltrop

(56) **References Cited**

U.S. PATENT DOCUMENTS

2014/0174101	A1	6/2014	Veltrop
2014/0197177	A1	7/2014	Veltrop et al.
2014/0263269	A1	9/2014	Veltrop et al.

FOREIGN PATENT DOCUMENTS

JP	11342061		12/1999
WO	WO-01/31533	A1	5/2001
WO	WO-2005/034633	A1	4/2005

OTHER PUBLICATIONS

Betzold et al., U.S. Appl. No. 14/278,549, "Modular Food Holding Cabinet Having Individually Configurable Food Holding Units", filed May 15, 2014.
Final Office Action issued for U.S. Appl. No. 12/782,843, USPTO.
Final Office Action issued for U.S. Appl. No. 13/567,821, dated Jun. 6, 2013, USPTO.
Frymaster HCP Installation and Operation Manual, Dec. 2006, pp. 1-1 to 10-4, title page and table of publisher, Enodis, Frymaster LLC, Shreveport, LA.
Non-Final Office Action issued for U.S. Appl. No. 12/782,843, dated Jun. 19, 2013, USPTO.
Non-Final Office Action issued for U.S. Appl. No. 12/782,843, dated Aug. 21, 2012, USPTO.
Non-Final Office Action issued for U.S. Appl. No. 13/567,821, dated Feb. 8, 2013, USPTO.
Prince Castle LLC, Holding Bins (www.princecastle.com <http://www.princecastle.com>) (2009).
Prince Castle LLC, Holding Panels (www.princecastle.com <http://www.princecastle.com>).
Reider, How to Say What Stuff Looks Like, Ontario, Canada: Marcus Books, p. 62 (1995).
Thermodyne Food Products, Inc., Counter Top Holding Oven Model 300 NDNL specification (applicant admitted prior art).
Veltrop et al., Design U.S. Appl. No. 29/450,074, "Food Warmer", filed Mar. 15, 2013.
Veltrop et al., Design U.S. Appl. No. 29/494,683, "Food Warmer", filed Jun. 23, 2014.

* cited by examiner

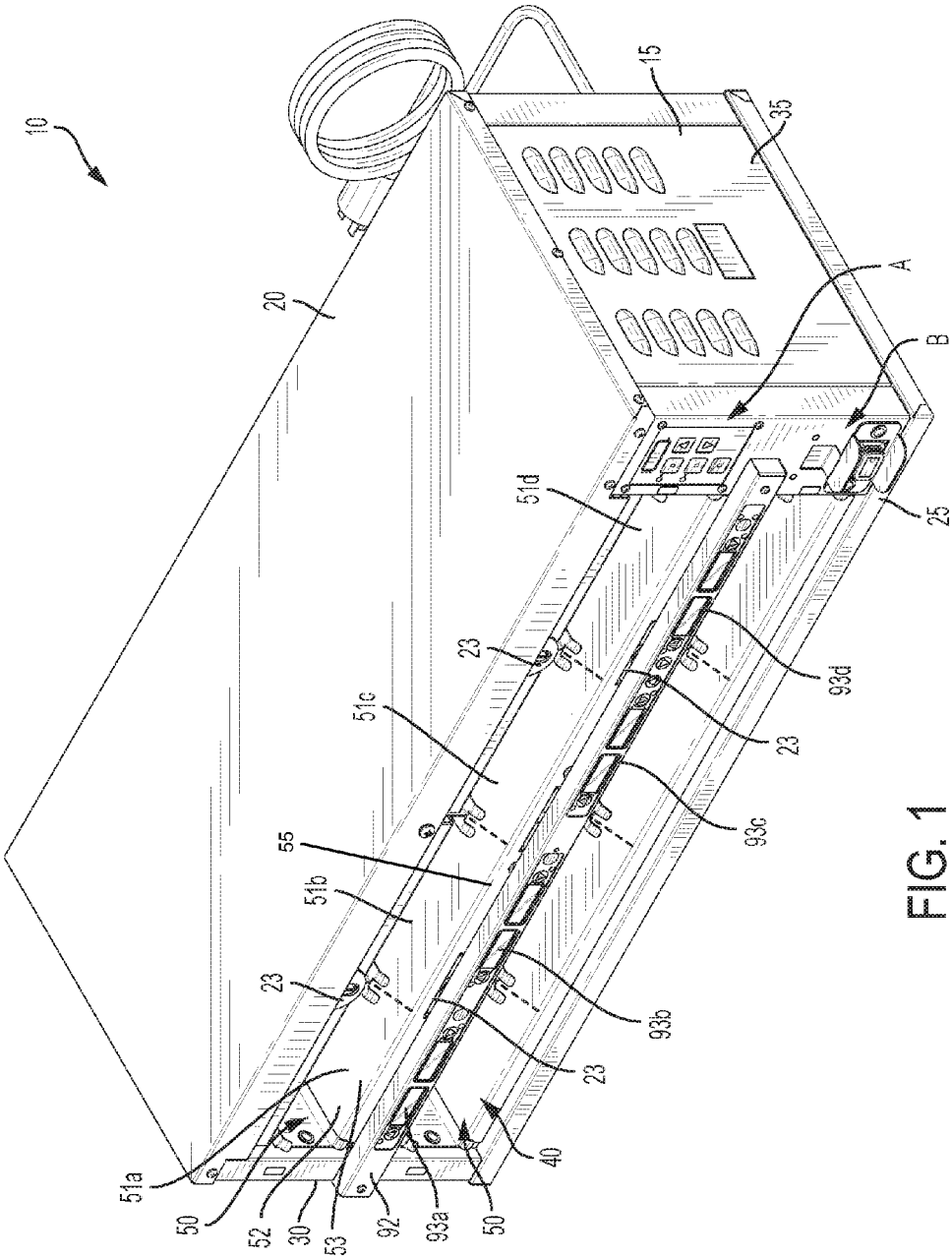
10
20
15
35
A
B
25
51d
23
93d
51c
23
93c
55
51b
23
93b
23
40
51a
50
52
30
53
92
93a
50

FIG. 1

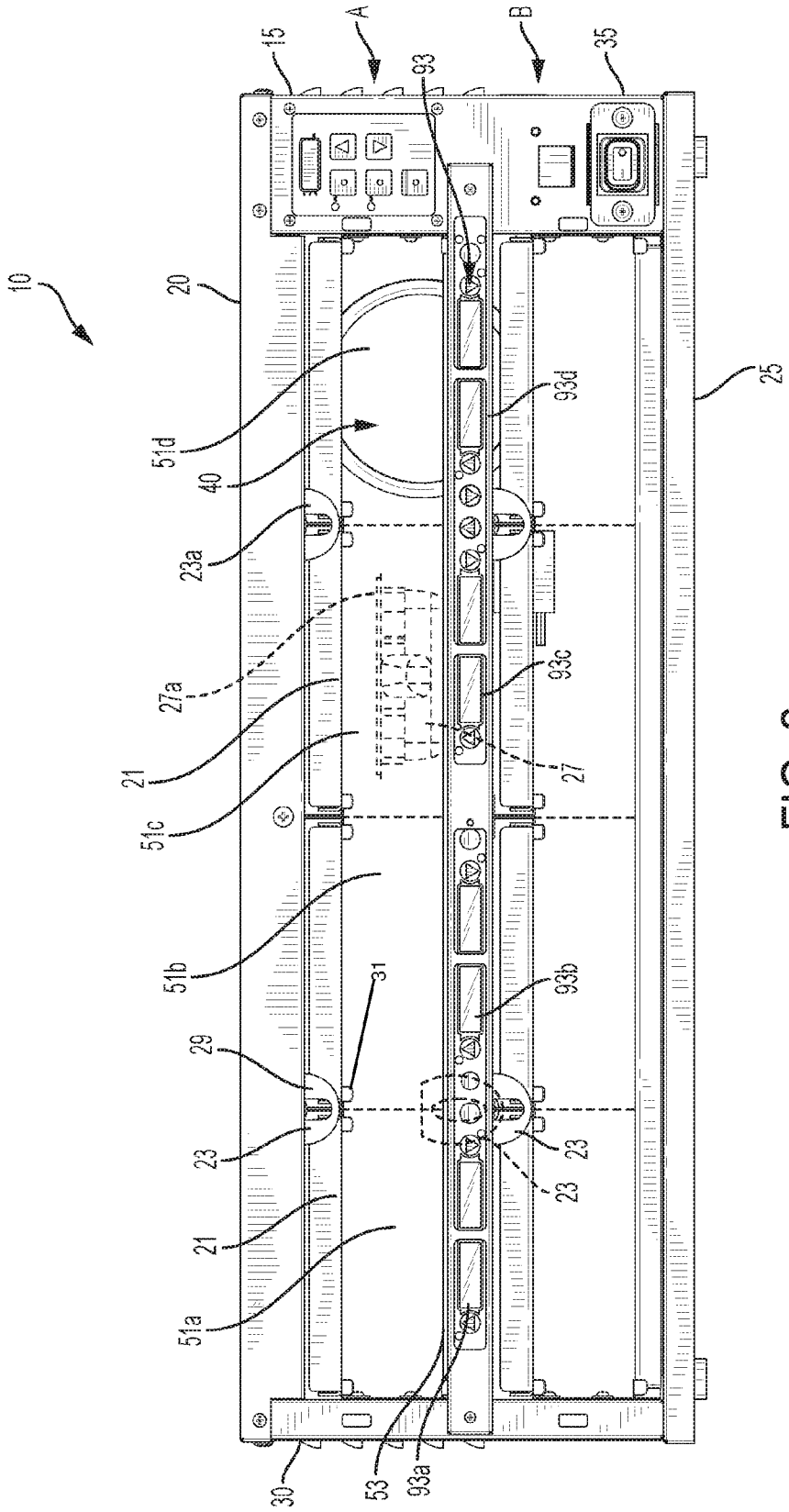
10
15
A
93
B
35
20
25
51d
40
93d
23a
27a
21
51c
93c
27
51b
31
93b
29
23
23
23
21
51a
30
53
93a

FIG. 2

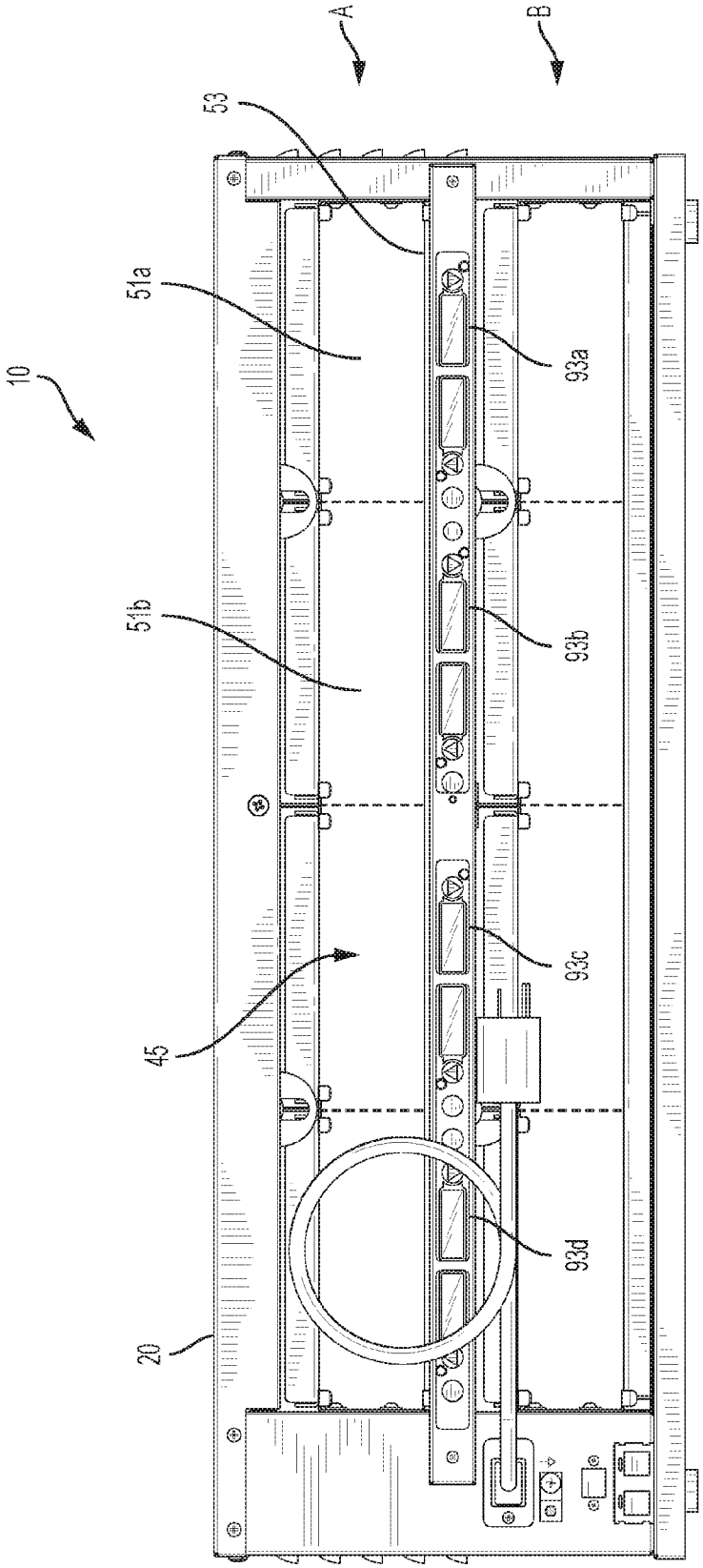

FIG. 3

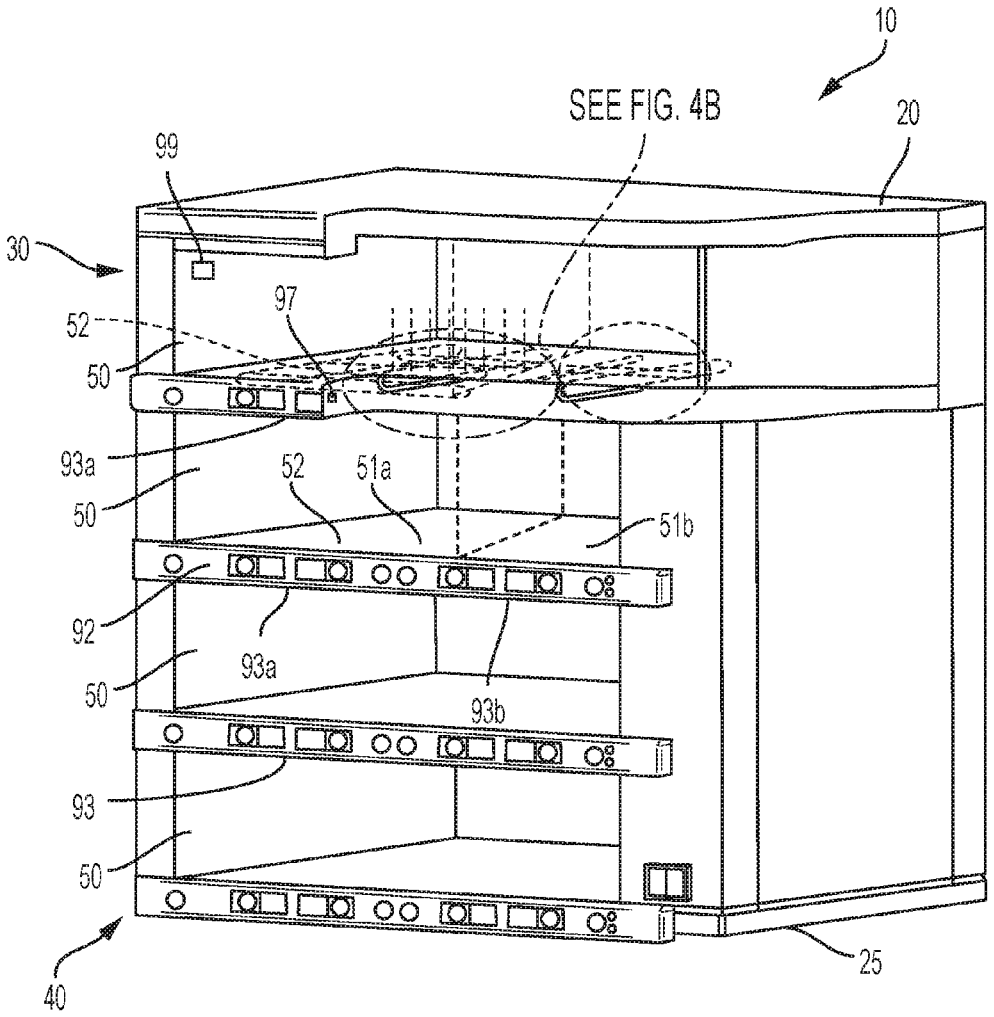
10
SEE FIG. 4B
20
99
30
97
52
50
93a
52
51a
50
51b
92
93a
50
93b
93
50
25
40

FIG. 4A

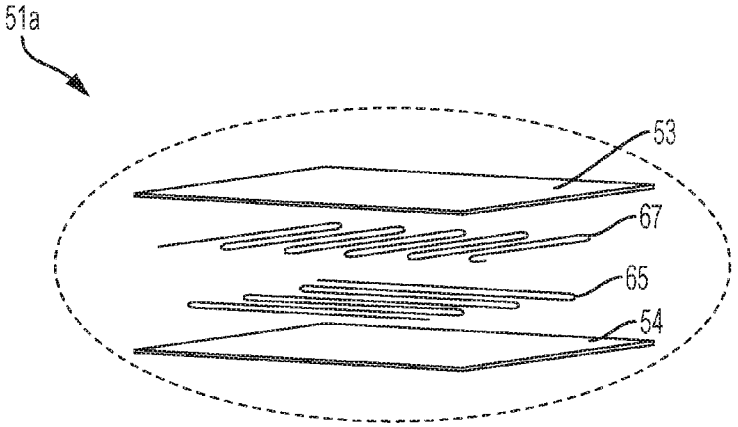
51a
53
67
65
54

FIG. 4B

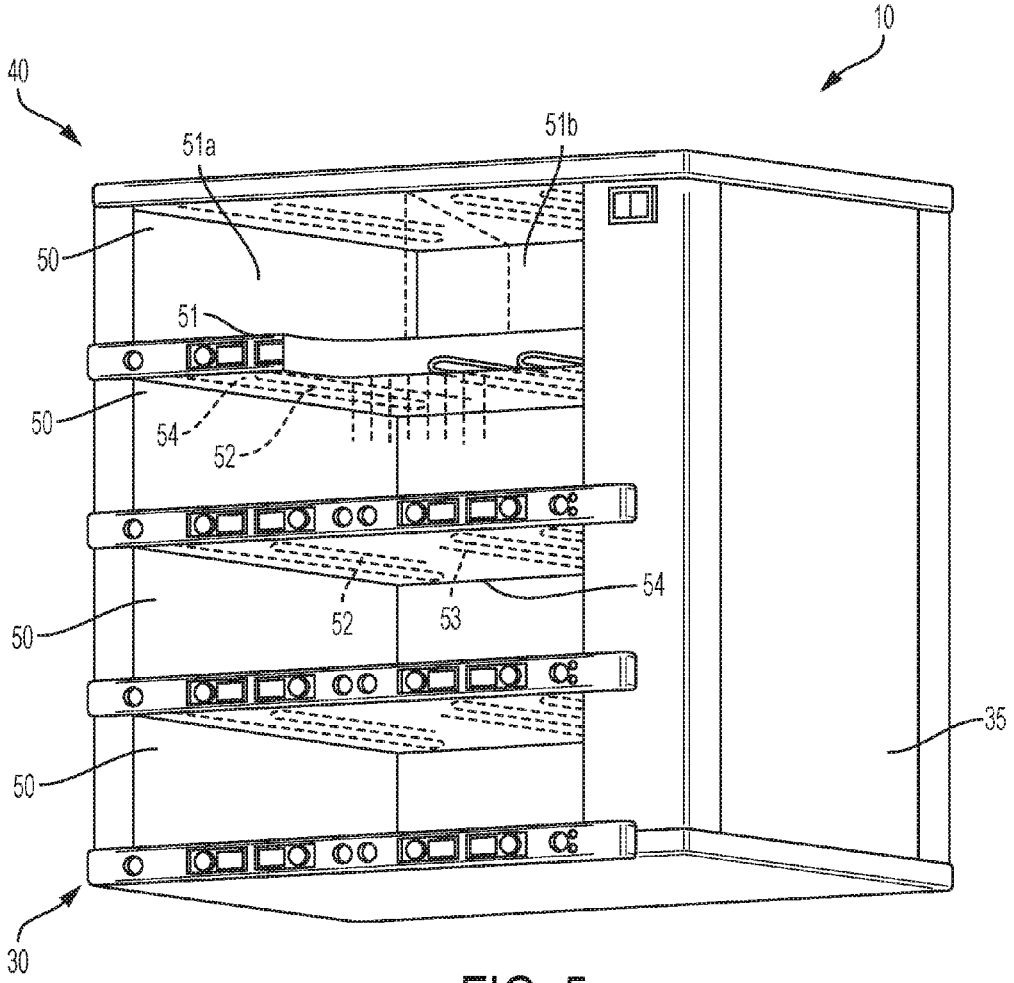

FIG. 5

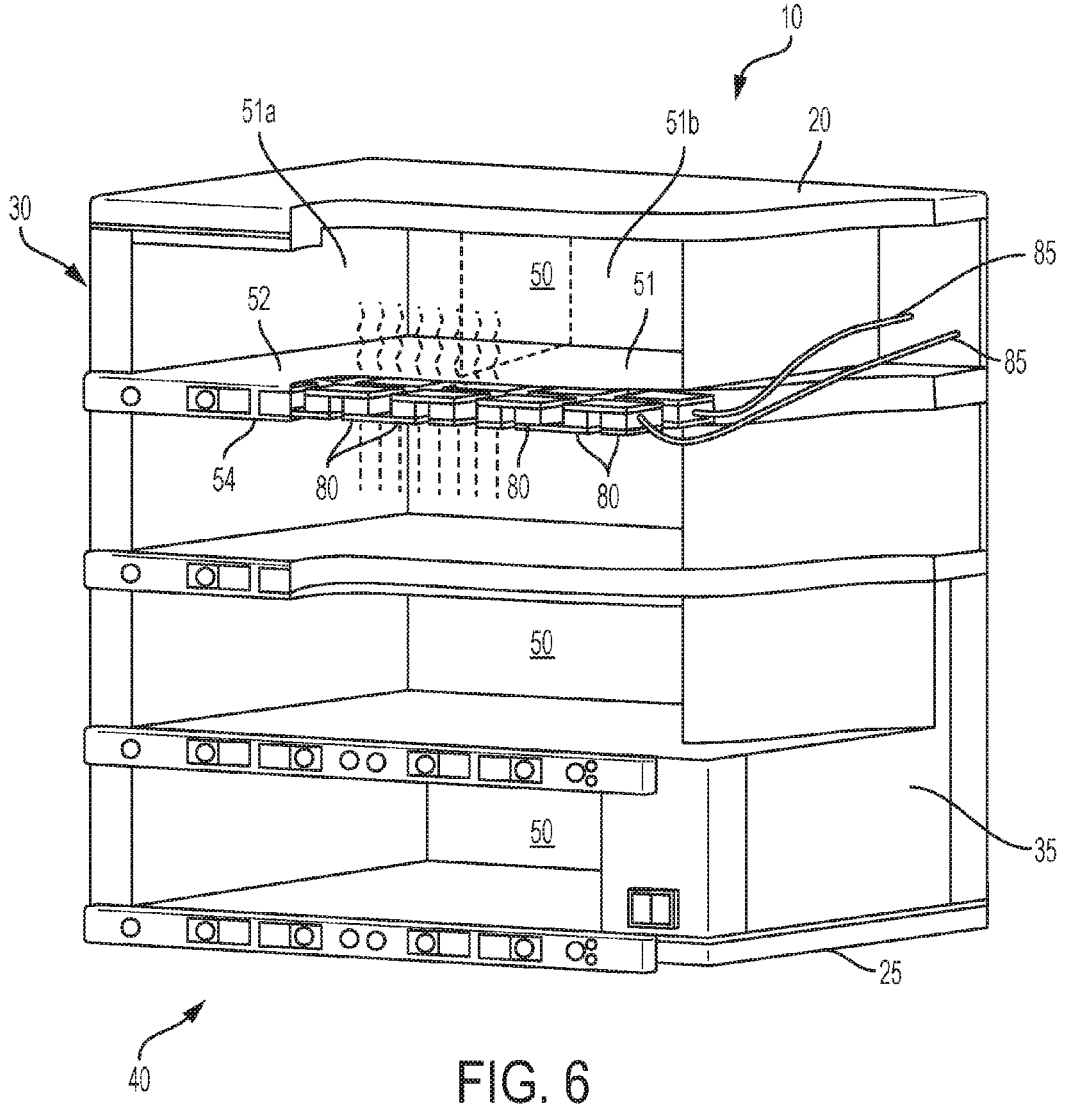

FIG. 6

MULTI-ZONE FOOD HOLDING BIN

BACKGROUND

Often the success of a restaurant depends, at least in part, on how quickly customers can be served with ordered food items and also on the quality of the food items when served. If the rate of food preparation equals the rate at which the food is ordered and sold, a restaurant can theoretically have freshly-prepared foods ready to serve for customers as they arrive. Since it is not always possible to match food production with customer ordering rates, and since certain fast food restaurant customers expect to receive their ordered food items quickly, many fast food restaurants prepare various food items in advance and keep them ready for sale until a customer arrives and purchases a pre-cooked food item.

To facilitate the food holding process, holding bins or holding ovens are often used to keep the food warm. Known holding bins can allow a cooked food item to be inserted from one side and taken from the opposite side whereby food preparers add food to the holding bin on one side and food servers on the opposite take food from the holding bin. Food holding bins in which the cooked food item is inserted and removed from the same side are also known. The food items in the holding bins are kept warm by heating elements. However, food holding time in known holding bins or ovens is somewhat limited, generally less than 15 or 20 minutes before the food item must be discarded. As a result, restaurants can only keep a limited amount of pre-cooked food items on hand and often a significant amount of the pre-cooked food items must be discarded before they are sold, resulting in additional costs.

BRIEF DESCRIPTION OF THE DRAWINGS

FIG. **1** is a perspective view of a multi-zone food holding bin;

FIG. **2** is a front elevational view of the multi-zone food holding bin of FIG. **1**;

FIG. **3** is a rear elevational view of the multi-zone food holding bin of FIG. **1**;

FIG. **4**A is a partially cut-away top perspective view of an alternate embodiment of a multi-zone food holding bin and FIG. **4**B is a close up of a shelf portion of the multi-zone food holding bin from circle **4**B in FIG. **4**A;

FIG. **5** is a partially cut-away bottom perspective view of the food holding bin of FIG. **4**; and

FIG. **6** is a partially cutaway top perspective view of yet another alternate embodiment of a multi-zone food holding bin.

DETAILED DESCRIPTION

Turning now to FIGS. **1-3**, a multi-zone food holding bin **10** includes two separate food holding compartments **50**. Additional food holding compartments **50** may also be included as explained in further detail below. Each separate food holding compartment **50** includes two or more separate food holding zones, for example, a first food holding zone **51***a* and a second food holding zone **51***b*. As illustrated in FIGS. **1-3**, the multi-zone food holding bin **10** also includes a third food holding zone **51***c* and a fourth food holding zone **51***d*. The food holding zones **51***a*, **51***b*, **51***c*, and **51***d* are illustrated as being separated from one another by a dashed line in FIGS. **1-3**. The dashed lines are for illustration only. The food holding zone need not have their boundaries identified with any sort of line or other indicia in food holding compartment **50**. Each food holding zone **51***a*, **51***b*, **51***c*, and **51***d* can be configured to maintain a different food holding temperature, advantageously allowing the operator to hold different food products with different heating requirements in the same food holding compartment **50**, thereby permitting increased energy efficiencies to be realized and potentially reducing the space requirements for holding different foods. For example, a first food product such as french toast can be held at a first temperature in the first food holding zone **51***a* and a second food product such as eggs can be held at a second temperature in the second food holding zone **51***b*, the second temperature capable of being independently set to be different from the first temperature. Similarly, a third food product such as sausage patties can be held at a third temperature in the third food holding zone **51***c*, the third temperature capable of being independently set to be the same or different from the first and second temperatures. And a fourth food product such as hash browns can be held at a fourth temperature in the fourth food holding zone **51***d*, the fourth temperature capable of being independently set to be the same or different from the first, second, and third temperatures. This can be particularly useful for restaurants during lower demand times and also for smaller restaurants and retail operations.

In one embodiment of the cabinet **10**, all of the compartments **50** are heated. In another embodiment, some compartments **50** may be refrigerated while other compartments **50** are heated. In yet another embodiment, one or more compartments **50** can be selectively heated or refrigerated.

The cabinet **10** includes a chassis **15**. As illustrated, the chassis **15** includes a top panel **20**, a bottom panel **25**, left-side panel **30**, right side panel **35**, an open front face **40** and an open rear face **45**. When the rear face **45** is open and uncovered, food items can be inserted by a first operator responsible for initial food preparation and passed through to a second operator responsible for final food preparation, for example, packaging and customization of a food product for serving to the ultimate customer. In another embodiment, the rear face **45** may be "closed" and provided by a rear panel such that access into the cabinet **10** is only provided by the open front face **40**. The panels may be insulated to reduce heat transfer between the interior of the cabinet **10** and the atmosphere surrounding the cabinet **10**.

The cabinet **10** illustrated in FIG. **1** is sized, shaped and arranged to have two compartments **50**, however, the cabinet can have any number of compartments **50**, including a single compartment **50**. For clarity, the two compartments **50** depicted in FIGS. **1-3** are denominated using the letters A and B. The "A" compartment is the top or uppermost compartment **50** and the "B" compartment is the bottom or lower-most compartment **50**.

In the embodiment illustrated in FIG. **1**, the top or "A" compartment is defined by the left and right sidewalls **30** and **35**, the chassis top panel **20** and a first or upper-most shelf **52**. Compartment "B" is defined by the two sidewalls **30** and **35**, the first or upper-most shelf **52**, and the chassis bottom panel **25**. In cabinet embodiments having only one compartment **50**, the single compartment is defined by opposing, left and right sidewalls **30** and **35**, a chassis top panel **20** and a chassis bottom panel **25**. For brevity, cabinet construction and operation is described with regard to a cabinet **10** having two compartments **50** in FIGS. **1-3**. However, other embodiments may have more than two compartments **50** or less than two compartments **50**. For example, the embodiments illustrated in FIGS. **4**A, **4**B, **5**, and **6** have four compartments **50**. Again, other configurations are also possible.

The shelf **52**, which partially defines the compartments **50**, is planar or at least substantially planar and supported in the chassis **15** at opposing side ends by the two chassis side walls **30** and **35**. The shelf **52** includes a planar and continuous top surface, which forms a planar and continuous bottom surface **53** of the upper compartment **50**. The planar and continuous bottom surface **53** of the upper compartment **50** is configured to support food items (as used herein, the term "food item" includes but is not limited to containers or trays containing food products such as cooked protein patties, fried foods, and the like). In the illustrated embodiment, food items can be placed onto the planar and continuous bottom surface **53** and removed from the planar and continuous bottom surface **53** through the open front face **40** or through the open rear face **45**. Because the bottom surface **53** is planar and continuous and substantially free of any dividing walls or other structure between the holding zones **51***a*, **51***b*, **51***c*, and **51***d*, cleaning of the bottom surface **53** can be easily accomplished.

A face plate or bezel **92** is generally attached to the front of the chassis **15**. For example, the bezel can be attached to the sidewalls **30** and **35** of the chassis **15** so as to be disposed underneath a top surface of the shelf **52**. In cabinet embodiments having only one compartment **50**, the bezel **92** may be attached to either of the chassis top or bottom panels **20**, **25** of the cabinet **10**. In the illustrated embodiment of FIGS. **1-3**, the bezel **92** is set forward from the shelf **52** by a space **55**. The space **52** forms a slot in which one or more latches **23** translate and/or rotate to release lids held in lid holding ledges **31** as will be discussed further below.

The bezels **92** include information displays and controls, which are collectively identified by reference numeral **93**. Although the chassis **15** can include panels concealing the heat generating devices located within a shelf, the bezel **92** also can conceal heating elements, which are located within the shelf **52**, such that a separate panel is not present.

Each food holding zone **51***a*, **51***b*, **51***c*, **51***d* may include a dedicated display and control **93***a*, **93***b*, **93***c*, **93***d*, respectively. In the embodiment illustrated in FIGS. **1-3**, the display and control **93***a*, **93***b*, **93***c*, and **93***d* displays the temperature setpoint of a respective food holding zone **51***a*, **51***b*, **51***c*, **51***d*. Moreover, each display and control **93***a*, **93***b*, **93***c*, **93***d* controls heating elements that maintain the temperature setpoint of the respective food holding zones **51***a*, **51***b*, **51***c*, **51***d*. The displays and controls **93***a*, **93***b*, **93***c*, **93***d* may be grouped together (i.e., arranged horizontally beneath the respective food holding zone **51***a*, **51***b*, **51***c*, **51***d*) in the bezel **92** for a corresponding compartment **50**. In the embodiment illustrated in FIGS. **1-3**, a single bezel **92** is used to provide the display and control elements for two vertically adjacent compartments **50**, but of course discrete bezels can also be used. The displays and controls **93***a*, **93***b* provide a user graphical interface to one or more controllers (not shown) for the cabinet.

Each food holding zone **51***a*, **51***b*, **51***c*, **51***d* may be sized to receive a food holding tray **27** and lid **21** (see FIG. **2** where the tray **27** is illustrated in broken lines). In order to conveniently store the lid **21**, each food holding zone **51***a*, **51***b*, **51***c*, **51***d* may also include a dedicated lid holding shelf **31** that is sized to receive and store the lid **21** when the lid **21** is desired for use in combination with a food holding tray **27**, such as when protein patties are contained within the tray **27**. Generally, a top surface **27***a* of a food holding tray **27**, when received in the lid holding shelf **31**, is substantially flush with a top surface of the lid holding shelf **31** such that when the tray **27** is disposed in the food holding zone **51***c*, the tray **27** can be in contact with and engaged by the lid **21** in the lid holding shelf **31** so as to retain moisture within the tray **27**-lid **21** assembly. In some embodiments, the lid holding shelf **31** may be provided by formed sheet metal. In other embodiments, the lid holding shelf **31** may be provided by a wire form. Other structures are also possible.

Adjacent to each lid holding shelf **31** is one or more latches **23** having an open center portion. In the illustrated embodiment, the latches **23** have a round or curved body **29** that is rotatable and/or translatable (because of the open center) about a retaining element such as a pin or screw (not shown). In other embodiments, the latches **23** may have straight or angled outer surfaces that form other shapes, such as a square, a pentagon, a hexagon, or any other polygonal shape. The latches **23** may be disposed adjacent an opening into the food holding compartment **50** above the lid holding shelf **31**. In one example, the latches **23** may be captured on a cylindrical retaining element between the chassis **15** and a top of the food holding compartment **50** above the lid holding shelf **31**. In other embodiments, one or more washers (not shown), such as metal, nylon, or plastic washers, may be disposed on the cylindrical retaining element to space the latches **23** apart from the bezel **92** and the shelf **52** to prevent metal galling and/or to reduce friction between the latches **23** and the bezel **92** or shelf **52** to ease actuation of the latches **23**.

The round body **29** may be oriented substantially parallel to a front face of the chassis **15** or the bezel **92** in a locked or default position, as illustrated by reference numeral **23***a*, which prevents inadvertent removal of a lid **21** from the lid holding shelf **31** when a tray **27** is withdrawn. The latch **23** is in its default or locked position simply because of gravity, thus re-positioning the latch to an unlocked state advantageously requires simply overcoming the weight of the latch **23** by translational and/or rotational movement. The round body **29** may be rotated and/or translated upwards relative to the bezel **92** or lid holding shelf **31** from the locked or default position to an unlocked position, as illustrated by the dotted lines referencing latch **23** between food holding zone **51***a* and food holding zone **51***b* in FIG. **1**; this rotational and/or translational movement of the latch **23** about the retaining element allows facile insertion or removal of a lid **21** to/from the lid holding shelf **31**. The round body **29** may be mounted on a retaining element such as a pin (not shown), which retains the round body **29** and allows the round body **29** to translate along the open center portion and/or to at least partially rotate about the pin when the round body **29** translates. The lid holding shelf **31** also allows the food holding compartment **50** to have the planar and continuous bottom surface **52** by storing the lids **27***a* in an elevated position, with the lid holding shelf **31** being suspended above the continuous bottom surface **52**, typically by fixedly attaching a base of the shelf to a top surface of the food holding compartment **50** at one or more positions. Such continuous planar and continuous bottom surfaces **52** are much easier to clean than compartmentalized or divided heating chambers. Furthermore, the round body **29** of the latch **23** and the translation/rotation movement of the latch allow easy removal of the lids **27** from the lid holding tray **31** with one hand while positioning the latch **23** to the unlocked position with another hand.

From a purely functional standpoint, a preferred latch **23** might simply include a locking portion that is able to prevent inadvertent displacement of the lid **21** when the tray **27** is purposefully removed. Thus, a number of different configurations and shapes can be used for the latch **23**. The latch **23** illustrated here with the round body **29**, on the other hand, has an alternative, ornamental arrangement for the round

body **29** in which the edges of the round body **29** include an arc-shaped, curved surface. This illustrated arrangement may add to the cost of manufacture, so the illustrated latch does not provide all of the possible economic advantages that might be derived from the invention. On the other hand, this arrangement is believed to be aesthetically pleasing and is likely to be recognized and relied upon by purchasers to identify the source of the food holding bin.

FIGS. **4**A, **4**B, and **5** are perspective views of an alternate embodiment of a multi-zone food holding bin **10**, the embodiment of FIGS. **4**A, **4**B, and **5** including four separate food holding compartments **50**. The embodiment of FIGS. **4**A, **4**B, and **5** is identical to the embodiment of FIGS. **1-3** with the exception that the embodiment of FIGS. **4**A, **4**B, and **5** includes four food holding compartments **50** instead of two. Thus, reference numbers identifying identical elements are the same in FIGS. **1-3** and in FIGS. **4**A, **4**B, and **5**. Moreover, elements not illustrated in one of the embodiments are understood to be present in the other embodiment. For example, the embodiment illustrated in FIGS. **4**A, **4**B, and **5** includes cut-away views showing internal components that are not visible in FIGS. **1-3**. Nevertheless, these internal components are understood to be present in the embodiment illustrated in FIGS. **1-3** as well.

Similar to the embodiment of FIGS. **1-3**, each separate food holding compartment **50** in the food holding bin **10** of FIGS. **4**A, **4**B, and **5** includes at least two separate food holding zones, a first food holding zone **51***a* and a second food holding zone **51***b*. Each food holding zone **51***a*, **51***b* is configured to maintain a different temperature. Of course, it is not necessary for the food holding zones **51***a*, **51***b* to be operated at different temperatures in practice.

The cabinet **10** illustrated in FIG. **4**A is sized, shaped and arranged to have four compartments **50**, however, cabinets in accordance with the disclosure can have any number of compartments, including a single compartment.

In FIG. **4**A, the first or top compartment is defined by the left and right sidewalls **30** and **35**, the chassis top panel **20** and the first or upper-most shelf **52**. The second compartment is defined by the two sidewalls **30** and **35**, the shelf **52** for the first compartment and the second shelf **52**. The third compartment is defined by the two sidewalls **30**, **35**, the second shelf **52** and the third shelf **52**. The fourth compartment is defined by the two sidewalls **30** and **35**, the third shelf and the chassis bottom **25**.

The shelves **52**, which partially define the compartments **50**, are planar or at least substantially planar and supported in the chassis **15** at their opposing side ends by the two chassis side walls **30** and **35**. Each shelf **52** forms a planar and continuous top surface, which defines a planar and continuous bottom surface **53** of the compartment **50**. The planar and continuous bottom surface **53** of the compartment is configured to support food items (as mentioned above, the term "food item" includes but is not limited to containers or trays containing food products such as cooked protein patties, fried foods, and the like). Food items can be placed onto the planar bottom surface **53** and removed from the planar bottom surface **53** through the open front face **40** or through the open rear face **45**.

Each food holding zone **51***a*, **51***b* may include a dedicated display and control **93***a*, **93***b*, respectively. Each display and control **93***a*, **93***b* displays the temperature setpoint of a respective food holding zone **51***a*, **51***b*. Moreover, each display and control **93***a*, **93***b* controls heating elements that maintain the temperature setpoint of the respective food holding zones **51***a*, **51***b*. The displays and controls **93***a*, **93***b* may be grouped together (i.e., arranged horizontally beneath the respective food holding zone **51***a*, **51***b*) in the bezel **92** for a corresponding compartment **50**. In the embodiment illustrated in FIGS. **4**A, **4**B, and **5**, a single bezel **92** is used to provide the display and control elements for a single compartment **50**. The displays and controls **93***a*, **93***b* provide a graphical user interface to one or more controllers (not shown) for the cabinet.

Cabinet control and control of the food holding zone **51** temperature is effectuated in part by using one or more microcontrollers or microprocessors **97** in combination with temperature sensors **99**. US 2011-0114624 A1 entitled "Food Holding Cabinet Power Supplies with Downloadable Software," the entirety of which is hereby incorporated by reference herein, discloses among other things, apparatuses and methods by which compartments of a food holding cabinet can be controlled using microprocessors having downloadable software. Compartment temperature control is preferably effectuated using a semiconductor temperature sensor, thermally coupled to each food holding zone **51** and electrically connected to a processor, such as those disclosed in US 2011-0114624 A1.

A semiconductor apparatus and method for measuring temperature of a plate or shelf in a food holding cabinet is disclosed in U.S. Pat. No. 8,247,745, which is entitled "Temperature Sensor for a Food Holding Cabinet" the entirety of which is hereby incorporated by reference herein.

The shelf **52** includes a lower heating element **67** for the first food holding zone **51***a* in a first or top food holding compartment **50**, and an upper heating element **65** for a second food holding zone **51***a* in a second or lower food holding compartment **50**, directly below the first food holding compartment **50**. While the first heating element **67** is illustrated as providing heat to the upper first food holding zone **51***a* (from below) and the second heating element **65** is illustrated as providing heat to the lower first food holding zone **51***a* (from above), heating elements that are not shown include at least a heating element that provides heat to the upper first food holding zone **51***a* from above and another heating element that provides heat to the lower first food holding zone **51***a* from below. Additionally, the second food holding zones **51***b*, which are adjacent to the first food holding zones **51***a*, are heated in the same way as the first food holding zones, but with independent heating elements. The heating elements of the second food holding zone **51***b* are independently controllable from the heating elements of the first food holding zones **51***a*. Referring to the inset FIG. **4**B, the shelf **52** includes an upper thermally conductive plate, which forms the continuous planar bottom surface **53** of the first (or upper) food holding compartment **50** and a lower thermally conductive plate, which forms a continuous planar upper surface **54** of the second (or lower) food holding compartment **50**. The planar bottom surface **53** and the planar upper surface **54** are spaced apart from each other by a distance sufficient to accommodate the inclusion of at least two heating elements, which are illustrated in the figures as the separate first heating element **67** and the separate second heating element **65**, respectively. Insulative materials may be provided between the first heating element **67** and the second heating element **65** to provide better thermal control over the food holding zones **51***a*, **51***b*. The first heating element **67** is a lower heating element for the upper food holding compartment **50** and the second heating element **65** is an upper heating element for the lower food holding compartment **50**.

The continuous planar bottom surface **53** of the top food holding compartment **50** and the continuous planar upper surface **54** of the bottom food holding compartment are

preferably made of aluminum, between about one-eighth and about one-quarter inch-thick. Alternate embodiments of the shelf **52** may use a thermally-conductive panel made of glass-ceramic or an ultra-low expansion glass for one or both of the lower surface **53** and the upper surface **54**. Glass-ceramics and ultra-low expansion glass are considered herein to be "good" thermal conductors in that their conduction of heat energy is localized. Such materials also make excellent shelves for a heated, multi-zone food holding bin because they permit localized areas of a shelf to be heated to a first temperature, without having the entire shelf reach the same temperature.

The first heating element **67** is disposed between the planar bottom surface **53** and the planar upper surface **54** and the first heating element **67** is in thermal communication with the planar bottom surface **53**. The first heating element **67** may be mechanically attached to the planar bottom surface **53** by a thermally-conductive adhesive, in one embodiment. The first heating element **67** may also be attached to the planar bottom surface **53** by brackets or clamps.

The second heating element **65** is disposed between the planar bottom surface **53** and the planar upper surface **54** and the second heating element **65** is in thermal communication with the planar upper surface **54**. The second heating element **65** may be mechanically attached to the planar upper surface **54** by a thermally-conductive adhesive, in one embodiment. The second heating element **65** may also be attached to the planar upper surface **54** by brackets or clamps.

In the embodiment illustrated in FIGS. **4**A, **4**B, and **5**, the first heating element **67** can be located above the second heating element **65** but in thermal communication with the planar bottom surface **53** such that when the temperature of the first heating element **67** rises, it provides heat energy into the planar bottom surface **53** in a region around the first heating element **67**, and more specifically, within the first food holding zone **51***a* of the first or top food holding compartment **50**. Thermally insulating the first heating element **67** from the planar upper surface **54** and thermally insulating the second heating element **65** from the planar bottom surface **53**, enables the first heating element **67** to provide a first amount of heat energy into the planar bottom surface **53** (and thus into the first food holding zone **51***a* of the upper food holding compartment **50**), while the second heating element **65** provides a second amount of heat energy into the planar upper surface **54** (and thus into the first food holding zone **51***a* of the lower food holding compartment **50**). In this manner, each food holding zone **51***a*, **51***b* may be configured to have an independent and unique temperature profile from top to bottom of the food holding zone **51***a*, **51***b*. For example, one food holding zone **51***a*, **51***b* may have a temperature profile that generally decreases from top to bottom (i.e., the top of the food holding zone **51***a*, **51***b* is hotter than the bottom of the food holding zone **51***a*, **51***b*).

In some embodiments, the second heating element **65** may comprise a radiant heating source that projects radiant heat through the planar upper surface **54** and into the first food holding zone **51***a* of the lower food holding compartment **50**. In other words, in one embodiment, the first heating element **67** provides heat energy into the first food holding zone **51***a* of the upper food holding compartment **50** through conduction, while the second heating element **65** provides heat energy into the first food holding zone **51***a* of the lower food holding compartment through radiation. Similarly, a radiant heating element may be provided at a top interior surface of the first or top food holding compartment **50** beneath the chassis top panel **20**. In this manner, the top and bottom of a food product placed into the first food holding zone **51***a* may absorb different amounts of heat energy, customized depending on the type of food product. Thus, the heat profile in the first food holding zone **51***a* may be customized vertically as well as differentiated from the heat profile in the second food holding zone **51***b*. As a result, a single food holding compartment **50** (e.g., the upper compartment in FIGS. **4**A and **5**) may be customized to store different types of food products in the first food holding zone **51***a* and the second food holding zone **51***b*, each food holding zone **51***a*, **51***b* having a different temperature profile. As a result, the disclosed food holding bin **10** is flexible in that it can keep multiple different types of food products at their ideal holding temperatures in a single food holding compartment, thus increasing efficiency and adaptability to different food demands.

Because of this flexibility, it has been found that a food holding bin constructed in accordance with the disclosure can extend the palatability time of a food item by a factor of two or more.

An alternate embodiment, as illustrated in FIG. **6**, may use the thermoelectric effect provided by one or more Peltier devices **80** to heat one or more of the compartments **50**.

The thermoelectric effect is a direct conversion of a temperature difference into an electric voltage and vice versa. When a voltage is applied to a thermoelectric device, a temperature difference is created across the two sides of the device. The temperature difference created in response to an applied voltage is known as the Peltier effect. Devices that produce temperature differences in response to an applied voltage are considered herein to be Peltier devices. A Peltier device **80** is therefore considered herein to be a heat source or heating element.

Peltier devices have a "cold" side and a "hot" side. The cold side absorbs heat whereas the hot side emits heat. Heat emitted from the hot side includes at least some of the heat absorbed from the cold side. A Peltier device **80** is therefore considered herein to be a solid-state heat pump or heat-sinking device.

FIG. **6** is a cutaway view of another embodiment of a point-of-use holding cabinet using Peltier devices to heat the food holding compartments **50**. In one embodiment, one or more Peltier devices **80** are "sandwiched" between, and in thermal communication with the bottom planar surface **53** and the upper planar surface **54** described above. Electrical energy is provided to the Peltier devices **80** through wires **85**, under the control of a controller.

"Sandwiching" the Peltier devices in a shelf **52** as shown in FIG. **6** provides a shelf **52** cold on one side and hot on the other. Such a shelf **52** structure thus enables a dual-mode food holding cabinet **10** having a "first" food holding compartment **50** that is warm and a vertically adjacent "second" food holding compartment **50** that is cold.

Temperature control of a thermoelectric, Peltier device **80** may be accomplished by controlling the electric energy provided to the device. Temperature control of one side of the Peltier device **80** can also be effectuated by controlling heat transferred into or out of the opposite side of the device, as described in US 2010-0307168 A1, entitled "Thermo Electric Cooler," the disclosure of which is incorporated herein by reference in its entirety.

In another embodiment of a multi-zone food holding bin **10**, multiple Peltier devices **80** are mounted between the bottom surface **53** and the upper surface **54** but have only their hot sides thermally coupled to the bottom surface **53**

and to the upper surface **54**. Air is then moved through the inter-plate space to heat the cool sides of the Peltier devices therein.

Peltier devices as disclosed herein and similar heat transfer devices are thermally coupled to the shelf **52**, preferably by way of mechanical attachment to at least one of the plates that form the lower planar surface **53** and the upper planar surface **54**. Mechanical attachment and the resultant thermal coupling is preferably accomplished by a thermally-conductive adhesive, however, clamps that are attached to a plate by screws driven into a plate can also be used.

The shelves are mechanically coupled to the side panels **30** and **35**. The side panels are also preferably made from thermally-conductive material such as aluminum. Thermally coupling a heat transfer device to one or more plates that comprise a shelf therefore also thermally couples the heat transfer device to the side walls and thus to the compartment. Heat transfer devices coupled to a shelf are therefore also thermally coupled to the corresponding compartment.

While the temperature of a Peltier device can be controlled by controlling the heat dissipated from the hot side and/or the heat absorbed into the cold side, cabinet embodiments disclosed herein preferably control compartment temperature using one or more semiconductor temperature sensors, thermally coupled to one or more of the thermally-conductive structures that comprise a compartment. Cabinet embodiments disclosed herein preferably use a semiconductor temperature sensor that is directly coupled and therefore thermally coupled to the heated surfaces **53** and/or **54** provided by the shelves **52**.

Semiconductor temperature sensors used in preferred embodiments disclosed herein are disclosed in U.S. Pat. No. 8,247,745, which is entitled "Temperature Sensor for a Food Holding Cabinet" the entirety of which is hereby incorporated by reference herein, especially the teachings of the structure and use of a semiconductor temperature sensor.

Thus, suitable heating elements for use in accordance with the disclosure include electrically-resistive heating elements, such as heated coils, radiant heating elements that provide heat energy via radiation, and devices and ancillary equipment that provide heat to a working fluid. As described above, Peltier devices may also be used as heating elements in accordance with the disclosure.

The foregoing description is for purposes of illustration only and not for purposes of limitation. The true scope of the invention is set forth by the appended claims.

What is claimed is:

1. A multi-zone food holding bin comprising:

a chassis having a front face and an opposing rear face;

a first food holding compartment within the chassis, the first food holding compartment having at least a first opening, the first opening being open, uncovered and located at the front face of the chassis, the first opening being configured to allow food items to be placed into and removed from the first food holding compartment;

a continuous and planar surface forming a bottom of the first food holding compartment, the continuous and planar surface extending completely to the front face of the chassis, the continuous and planar surface comprising Aluminum;

a first food holding zone formed in the first food holding compartment, the first food holding zone having an independently controllable radiant first heating element disposed at a top portion of the first food holding compartment, and an independently controllable conductive second heating element disposed at a bottom portion of the first food holding compartment;

a second food holding zone formed in the first food holding compartment, the second food holding zone having an independently controllable radiant third heating element disposed at the top portion of the first food holding compartment and an independently controllable conductive fourth heating element disposed at the bottom portion of the first food holding compartment; and

a food holding tray disposed in the first food holding compartment, the food holding tray resting on the continuous and planar surface,

wherein the first food holding zone and the second food holding zone are adjacent one another across the continuous planar surface and the first food holding zone is configured to maintain a first temperature and the second food holding zone is configured to maintain a second temperature, the first temperature and the second temperature capable of being different than one another, and

wherein the first independently controllable heating element heats the food holding tray radiantly from above and the second independently controllable heating element heats the food holding tray conductively from below.

2. The food holding bin of claim **1**, further comprising:

a second food holding compartment disposed below the first food holding compartment within the chassis, the second food holding compartment having at least a first opening, the first opening being open, uncovered and located at the front face of the chassis, the first opening being configured to allow food items to be placed into and removed from the food holding compartment; and

a shelf located between the first and second food holding compartments, the shelf comprising a first side and a second side, the first side facing into the first food holding compartment, the second side facing into the second food holding compartment, the second and fourth heating elements being disposed in the shelf and in thermal communication with the first side, the second and fourth heating elements being capable of providing different amounts of heat energy into the first and second food holding zones of the first food holding compartment; and

a controller operatively coupled to the second heating element and to the fourth heating element, the controller being configured to independently operate the second heating element and the fourth heating element.

3. The food holding bin of claim **1**, wherein the first and second food holding compartments each have a second opening, uncovered and located at the rear face of the chassis.

4. The food holding bin of claim **1**, wherein the first heating element is adapted to output more heat energy than the second heating element.

5. The food handling bin of claim **1**, further comprising a lid located in a top portion of the first food holding compartment, the lid capable of being inserted into a shelf above the continuous and planar bottom surface.

6. The food holding bin of claim **5**, further comprising a latch located adjacent to the shelf, the latch having a body including an open center portion, the latch being rotatable or translatable relative to the shelf between a locked position and an unlocked position.

7. The food holding bin of claim **1**, further comprising a lid on the food holding tray.

8. The food holding bin of claim **1**, wherein at least one of the first heating element and the second heating element is an electrically resistive heating wire.

9. A method of maintaining different temperatures in a food holding compartment of a food holding bin, the method comprising:

providing a food holding compartment with a first food holding zone and a second food holding zone adjacent to one another, the first and second food holding zones sharing an uninterrupted continuous planar bottom surface comprising Aluminum, the uninterrupted continuous planar bottom surface extending to a front face of a chassis forming the food holding compartment, and a food holding tray disposed in the food holding compartment, the food holding tray resting on the uninterrupted continuous planar bottom surface, the first food holding zone including a first independently controllable radiant heating element that heats radiantly from above and also includes a second independently controllable conductive heating element that heats conductively from below, and the second food holding zone includes a third independently controllable radiant heating element that heats radiantly from above and also includes a fourth independently controllable conductive heating element that heats conductively from below;

independently setting a first temperature in the first food holding zone by operating the first independently controllable heating element and by operating the second independently controllable heating element; and

independently setting a second temperature in the second food holding zone by operating the third independently controllable heating element and by operating the fourth independently controllable heating element,

wherein the first temperature is different from the second temperature.

10. The method of claim **9**, further comprising providing more heat energy from the first heating element than from the second heating element.

* * * * *