US007258064B2

(12) **United States Patent**
Vaseloff et al.

(10) **Patent No.: US 7,258,064 B2**
(45) **Date of Patent: Aug. 21, 2007**

(54) **FOOD PRODUCT TIMING SYSTEM**

(75) Inventors: **Dennis John Vaseloff**, Gurnee, IL (US); **Richard Lowell Thorne**, Elgin, IL (US); **Loren Jay Veltrop**, Deerfield, IL (US)

(73) Assignee: **Prince Castle, Inc.**, Carol Stream, IL (US)

(*) Notice: Subject to any disclaimer, the term of this patent is extended or adjusted under 35 U.S.C. 154(b) by 1032 days.

(21) Appl. No.: **10/234,297**

(22) Filed: **Sep. 4, 2002**

(65) **Prior Publication Data**

US 2004/0056761 A1 Mar. 25, 2004

(51) **Int. Cl.**
A47J 39/00 (2006.01)
A47J 37/00 (2006.01)
H05B 1/02 (2006.01)

(52) **U.S. Cl.** **99/468**; 99/374; 99/448; 99/483; 219/214; 219/486; 219/494; 219/506

(58) **Field of Classification Search** 99/448, 99/468, 483, 373, 374, 467, 331; 219/521, 219/494, 486, 506, 214, 395
See application file for complete search history.

(56) **References Cited**

U.S. PATENT DOCUMENTS

4,388,689	A	6/1983	Hayman et al.	364/401
4,530,067	A	7/1985	Dorr	364/900
4,569,421	A	2/1986	Sandstedt	186/39
4,922,435	A	5/1990	Cahlander et al.	364/477
5,003,472	A	3/1991	Perrill et al.	364/401
5,093,556	A	3/1992	Oelfke	219/386
5,128,862	A	7/1992	Mueller	364/405
5,132,914	A	7/1992	Cahlander et al.	364/478
5,172,328	A	12/1992	Cahlander et al.	364/478
5,188,020	A	2/1993	Buchnag	99/468
5,218,527	A	6/1993	Ishikawa et al.	364/405
5,253,564	A	10/1993	Rosenbrock et al.	99/328
5,357,426	A	10/1994	Morita et al.	364/400
5,504,589	A	4/1996	Montague et al.	358/403
5,510,979	A	4/1996	Moderi et al.	364/405

(Continued)

FOREIGN PATENT DOCUMENTS

JP	8000414	1/1996

(Continued)

OTHER PUBLICATIONS

Taco Bell Steam Table Timer operator's manual, Aug. 19, 1994.

(Continued)

Primary Examiner—Reginald L. Alexander
(74) *Attorney, Agent, or Firm*—Marshall, Gerstein & Borun LLP

(57) **ABSTRACT**

A food timing system is disclosed that includes a number of timer modules associated with food holding devices in a restaurant. The timer modules are connected in a network for communicating information about the food being held in food holding compartments of the food holding devices. Each timer module includes a plurality of timers, with each timer being associated with a food holding compartment of a food holding device. The timers measure the holding time of food in each food holding compartment and are capable of transferring the holding time to another timer when the food is transferred to a holding compartment associated with the other timer.

54 Claims, 10 Drawing Sheets

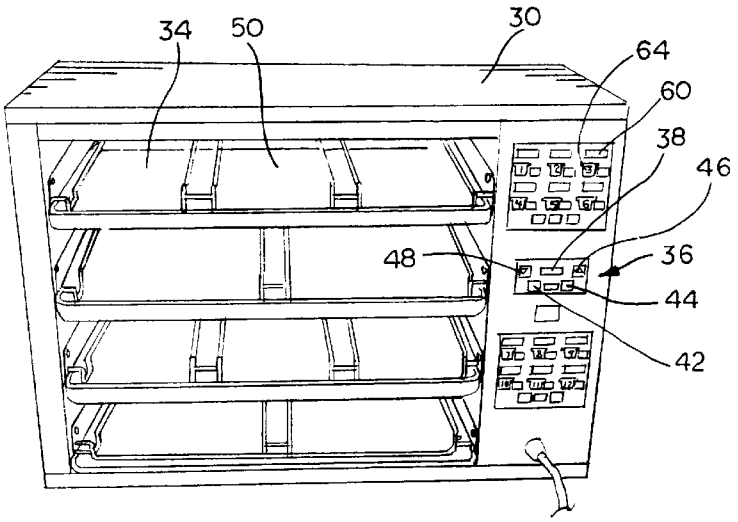

Duke Manufacturing Co. EX1026
U.S. Patent No. 9,980,322

U.S. PATENT DOCUMENTS

5,539,671	A	7/1996	Albrecht et al.	364/557
5,553,312	A	9/1996	Gattey et al.	455/11.1
5,579,952	A	12/1996	Fiedler et al.	221/150
5,590,586	A	1/1997	Ulfig et al.	99/339
5,616,269	A	4/1997	Fowler et al.	219/720
5,653,906	A	8/1997	Fowler et al.	219/716
5,724,886	A	3/1998	Ewald et al.	99/374
5,772,072	A	6/1998	Prescott	221/121
5,812,393	A	9/1998	Drucker	364/144
5,939,974	A	8/1999	Heagle et al.	340/286.09
5,947,012	A	9/1999	Ewald et al.	99/374
6,011,243	A	1/2000	Arnold et al.	219/506
6,026,372	A	2/2000	Savage	705/15
6,052,667	A	4/2000	Walker et al.	705/15
6,088,681	A	7/2000	Coleman et al.	705/15
6,119,587	A	9/2000	Ewald et al.	99/374
6,209,447	B1	4/2001	Ewald et al.	99/483
6,658,994	B1 *	12/2003	McMillan	99/468
7,105,779	B2 *	9/2006	Shei	219/413

FOREIGN PATENT DOCUMENTS

JP	10079088	3/1998
JP	11342061	12/1999

OTHER PUBLICATIONS

Merlin II Timers product brochure, 1998.
PCT/WO 01/31533 A1 Mar. 24, 1998.

* cited by examiner

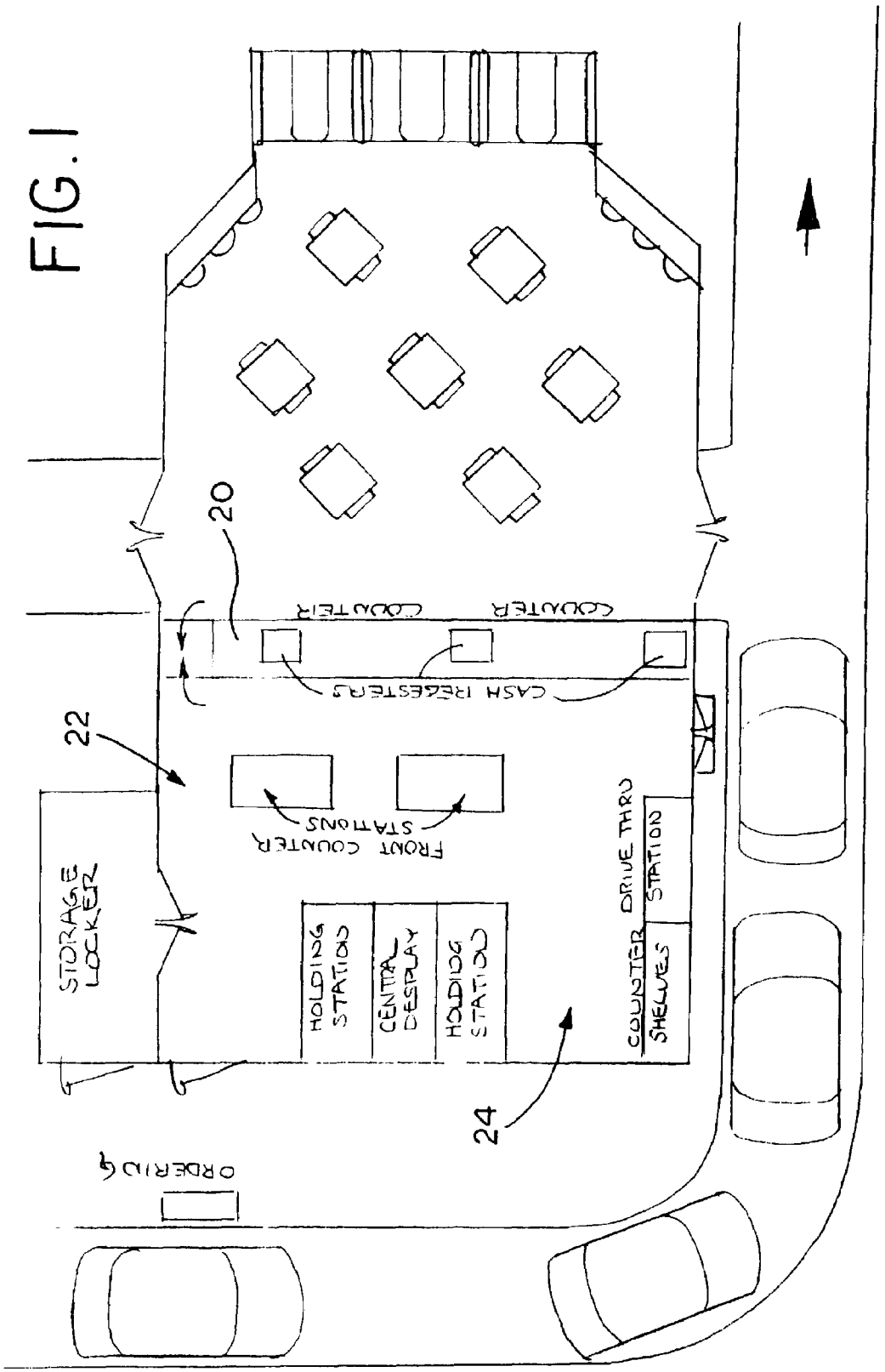
FIG. 1
20
22
24
COUNTER
COUNTER
CASH REGISTERS
FRONT COUNTER
STATIONS
STORAGE LOCKER
HOLDING STATION
CENTRAL DISPLAY
HOLDING STATION
COUNTER
SHELVES
DRIVE THRU
STATION
ORDERING

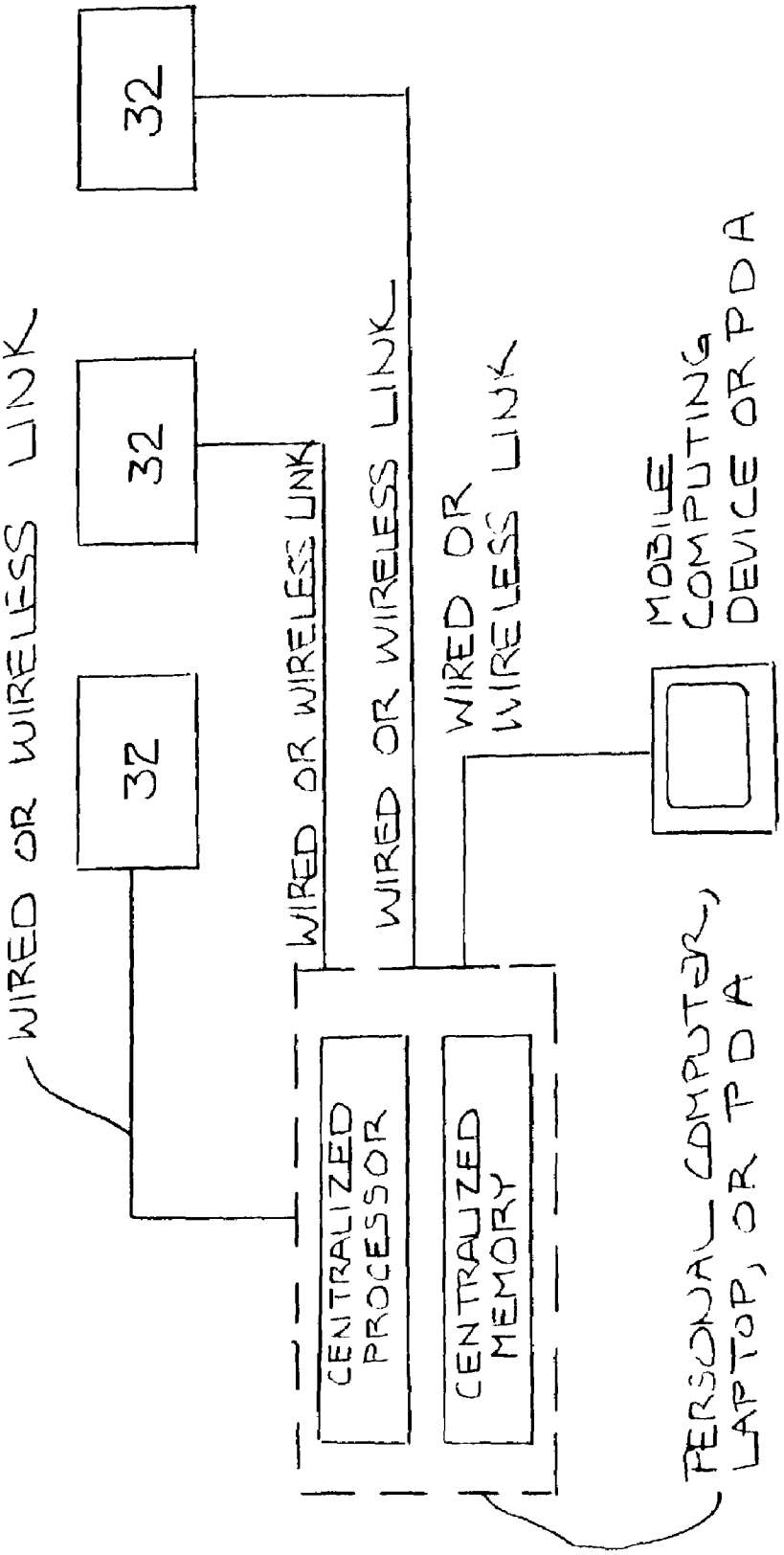
32
32
32
WIRED OR WIRELESS LINK
WIRED OR WIRELESS LINK
WIRED OR WIRELESS LINK
WIRED OR WIRELESS LINK
MOBILE COMPUTING DEVICE OR PDA
CENTRALIZED PROCESSOR
CENTRALIZED MEMORY
PERSONAL COMPUTER, LAPTOP, OR PDA

FIG. 2

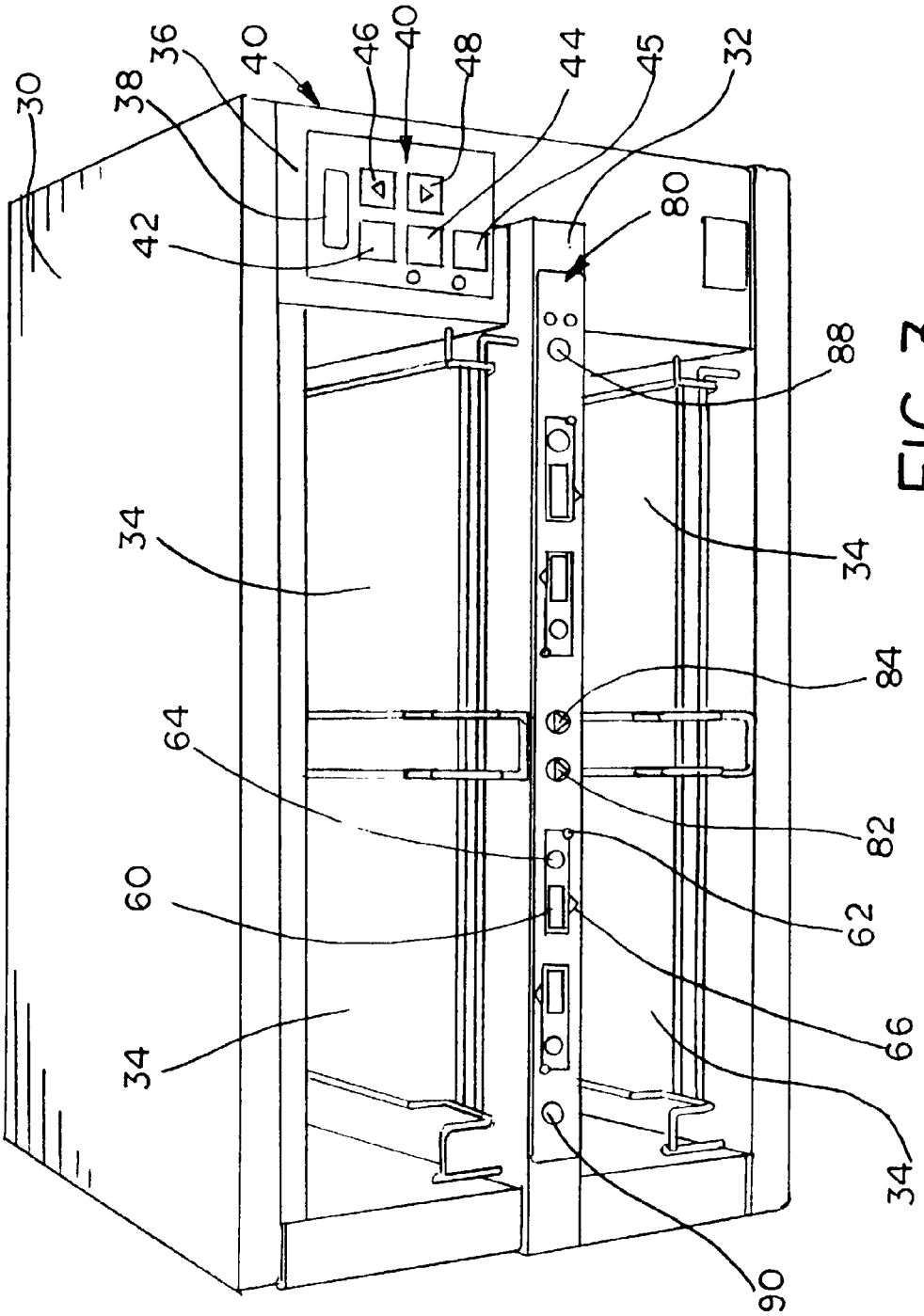

FIG. 3

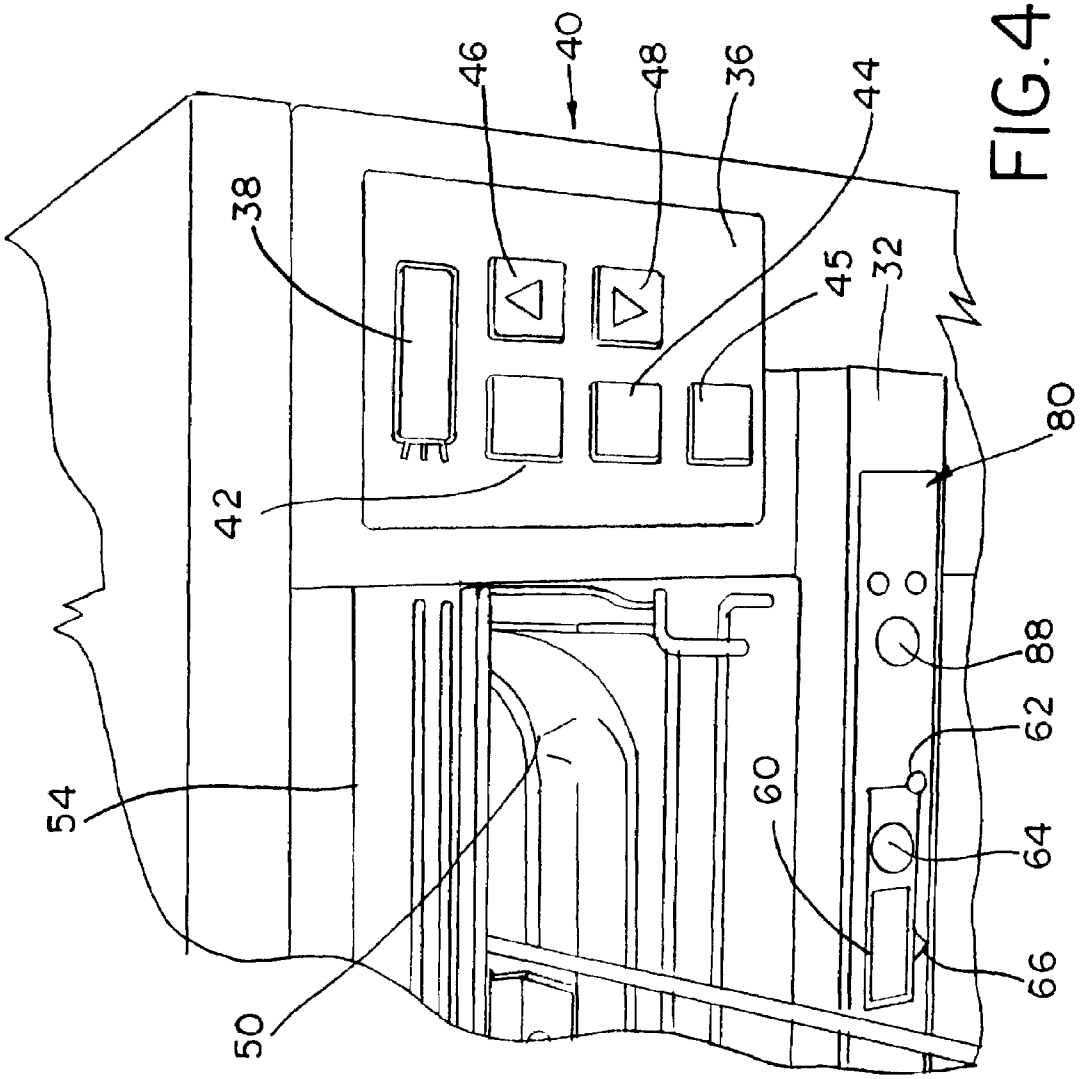

FIG. 4

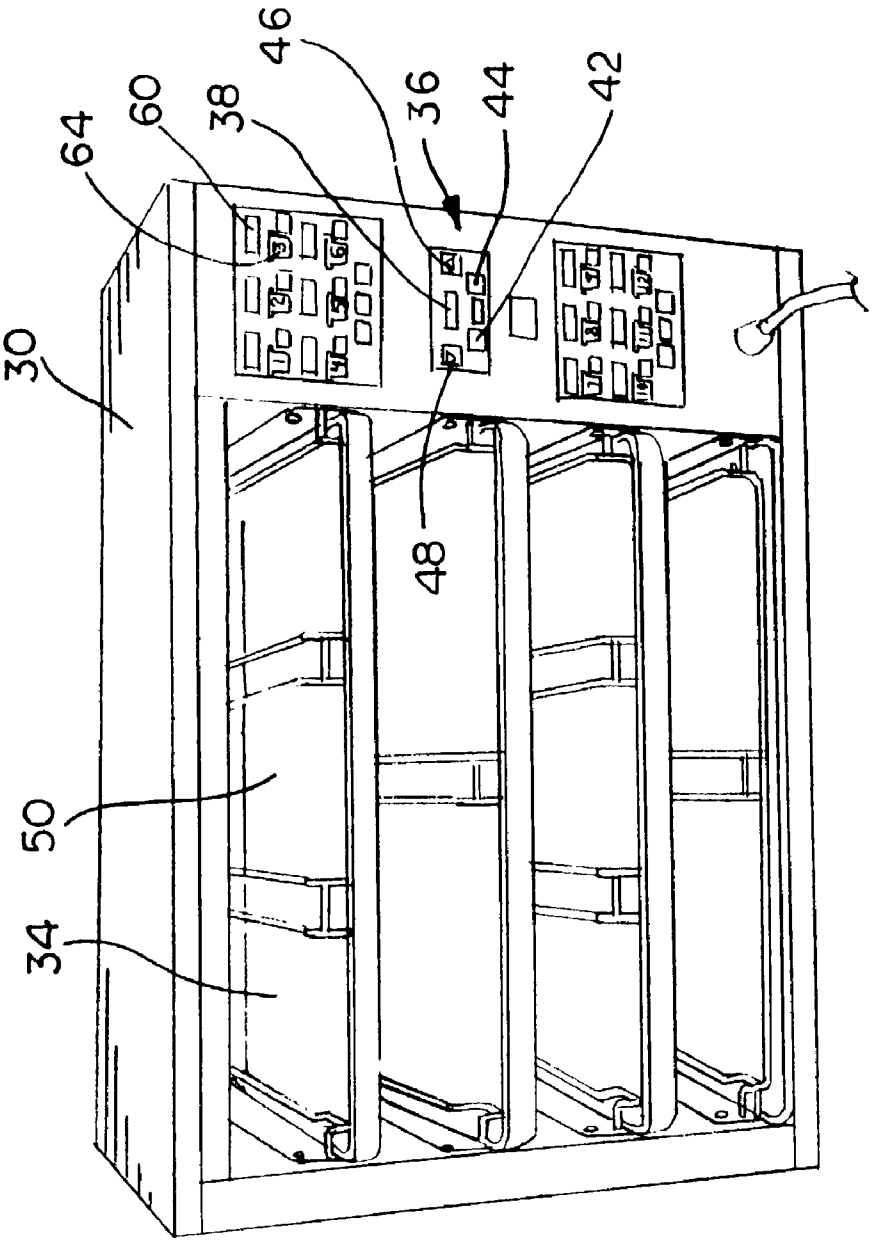

FIG. 5

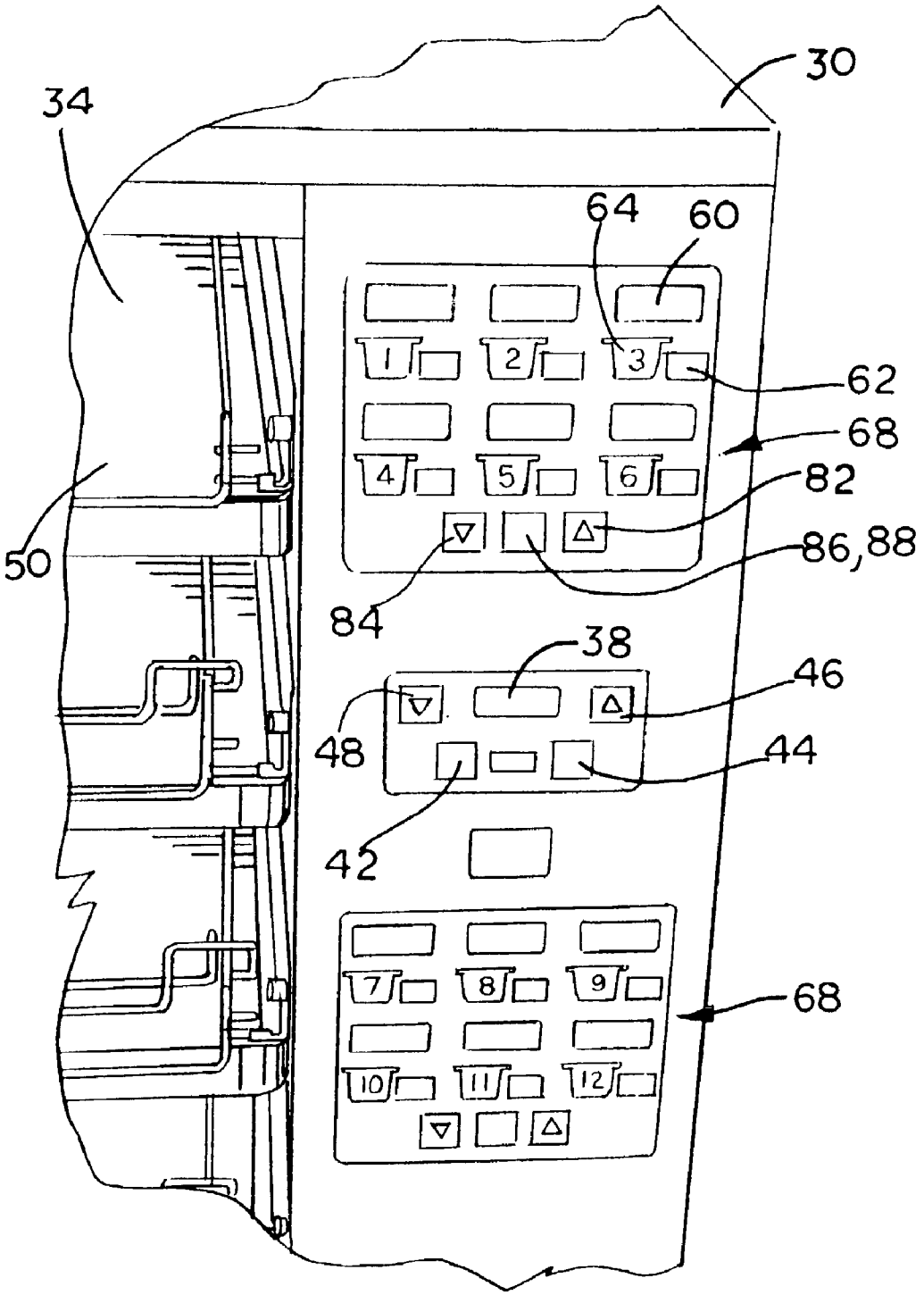

FIG. 6

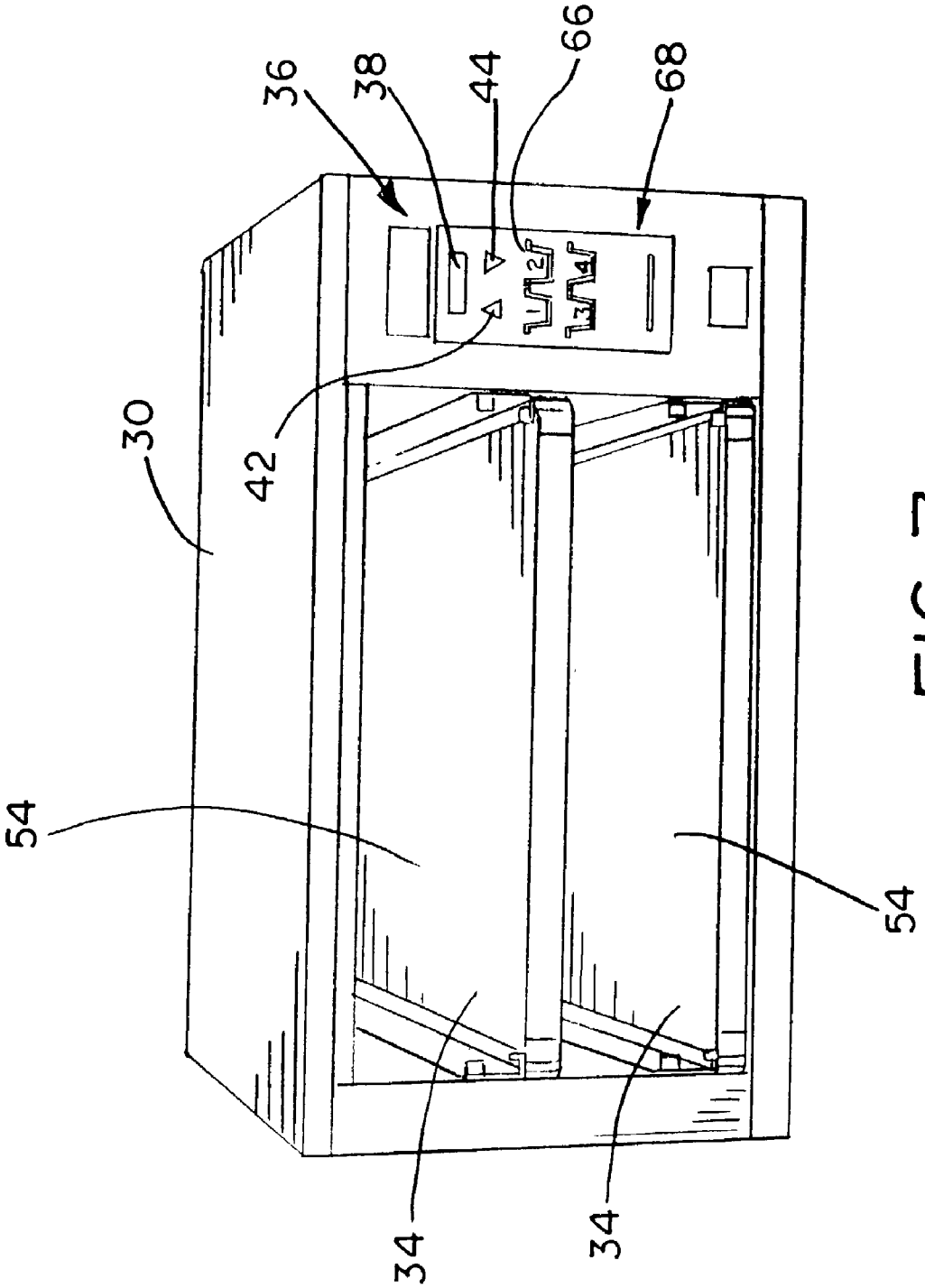

FIG. 7

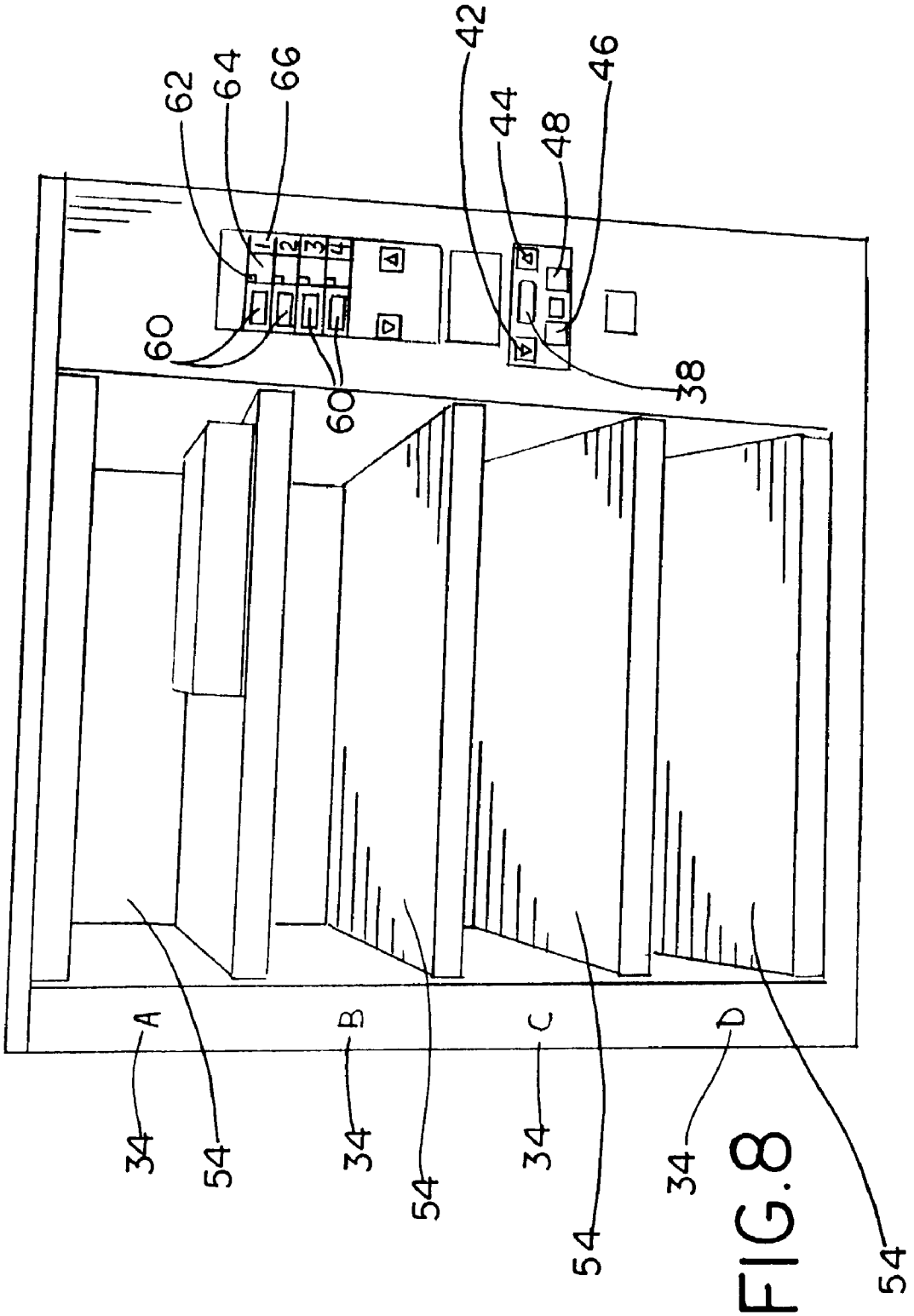

FIG. 8

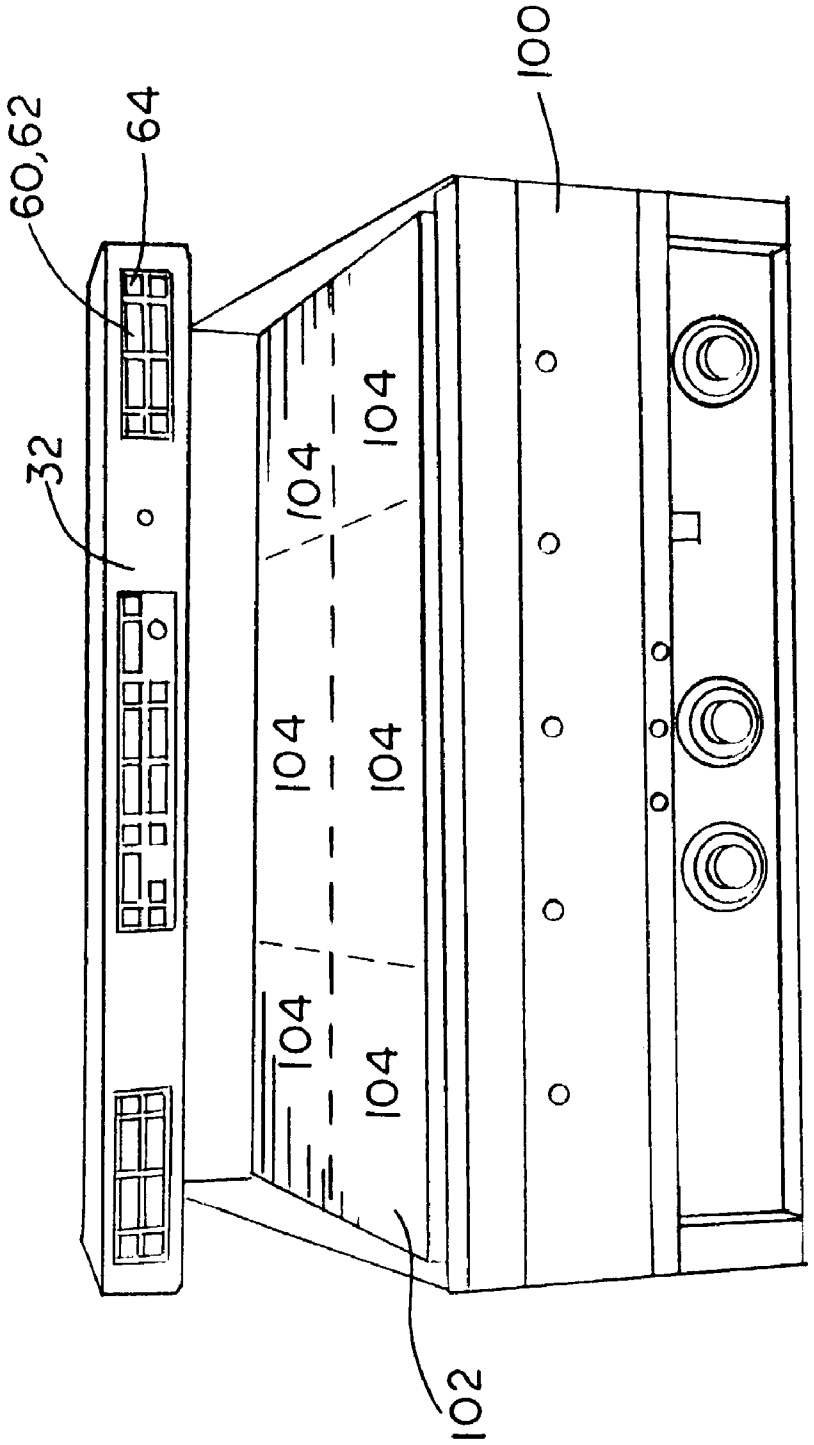

FIG. 9

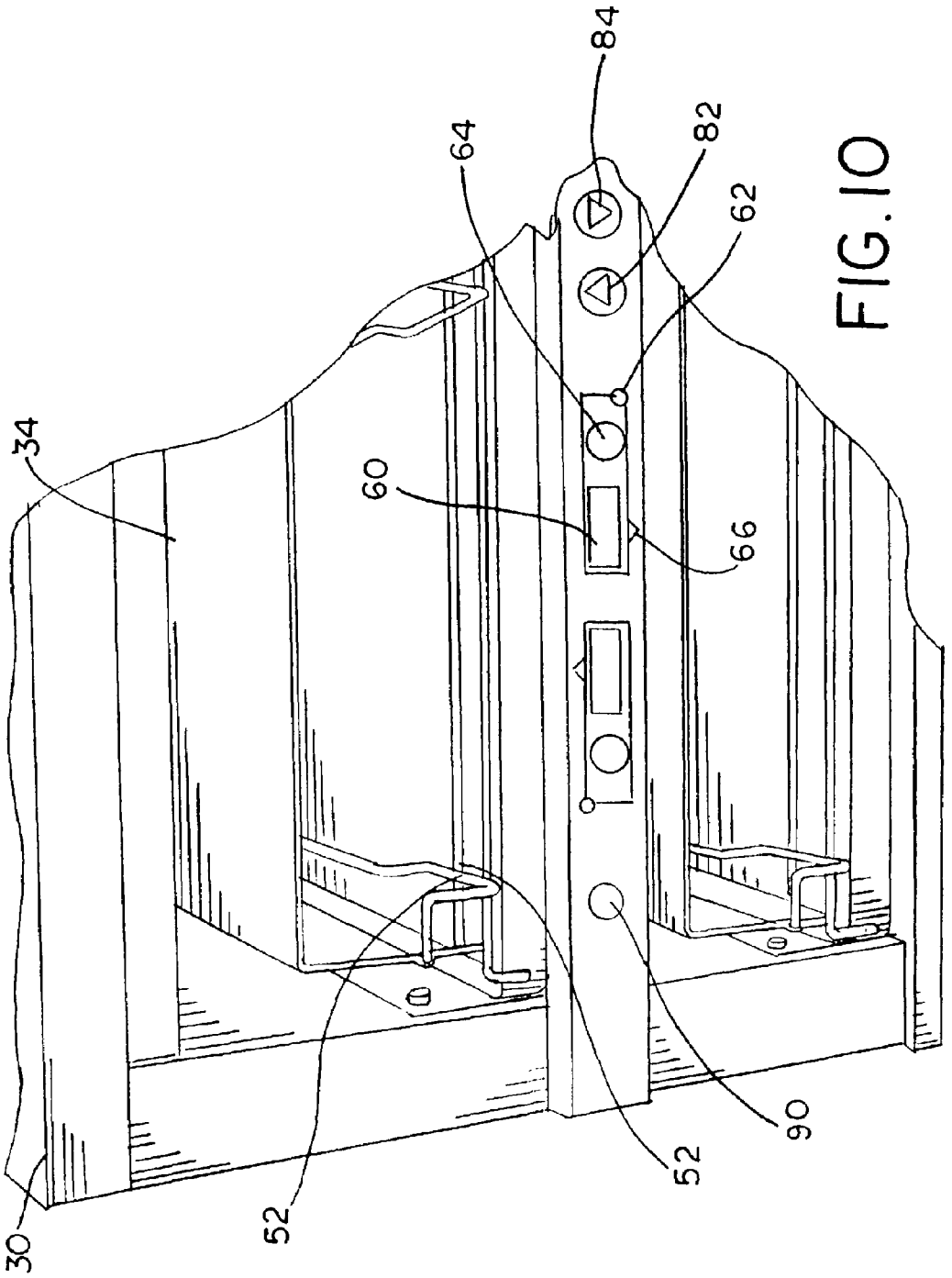

FIG. 10

FOOD PRODUCT TIMING SYSTEM

FIELD OF THE INVENTION

The present invention relates generally to food preparation systems, and more particularly to a timing system for use in connection with storing cooked food products.

BACKGROUND OF THE INVENTION

Success of a fast food restaurant depends on how fast a customer can be served with fresh food. Ideally, if the rate at which a restaurant cooks a food product and the rate at which the food product is sold are equal, the restaurant will have fresh food on hand and ready to serve. In other words, for the ideal fast food restaurant operation, the operator must know how many food products will be sold in the future. Although historical sales data for a food product can be used to predict future rates of sale, the prediction is highly approximate and subject to numerous unpredictable events and variables that the historical data do not reflect. As a result, a restaurant operator must precook a certain number of food products and have the cooked products on hand for immediate service.

Precooked food products cannot be stored for prolonged periods and must be heated during storage to assure freshness. The period before the food product is no longer considered fresh or is spoiled varies with each food product. Therefore, it would be beneficial to have a food storage system for storing and heating various precooked food products at storage temperatures and for periods suitable for each type of food products.

BRIEF DESCRIPTION OF THE DRAWINGS

Preferred exemplary embodiments of the invention are set forth in the following detailed description and accompanying drawings in which like reference numerals represent like parts throughout, and in which:

FIG. **1** is a schematic drawing of an interior layout of a fast food restaurant.

FIG. **2** is a block diagram of a food timing system in accordance with the present invention.

FIG. **3** is a front perspective view of a food holding device having each display device adjacent an associated food holding compartment.

FIG. **4** is a close-up of the right side of the food holding device of FIG. **3**.

FIG. **5** is a front perspective view of a food holding device having each display device in a display block.

FIG. **6** is a close-up of the right side of the food holding device of FIG. **5**.

FIG. **7** is a front perspective view of a food holding device having two food holding compartments and display devices in a display block.

FIG. **8** is a front perspective view of a food holding device having four food holding compartments for storing pizza containers.

FIG. **9** is a front perspective view of a grill with a timer system in accordance with the present invention.

FIG. **10** is a close-up of a gliding rack of the food holding device of FIG. **3**.

DETAILED DESCRIPTION OF THE PREFERRED EMBODIMENTS

Referring to FIG. **1**, a fast food restaurant typically includes a front counter **20** for taking customer orders and serving food to customers, a food preparation area **22**, and a drive-through area for taking orders from drive-through customers and serving the customers their food through a window **24**.

Referring to FIG. **2**, a food timing system for use in the food preparation area **22** includes a number of timer modules **32** for use with one or more food preparation devices and/or one or more food storage devices, which are hereinafter referred to as food holding devices **30**. Preferably, the timer modules **32** are components of a wired or wireless network that forms the food timing system. In a first embodiment, as shown in FIG. **2**, the food timing system further includes a centralized processor and a centralized memory for managing the connectivity, information sharing, and coupled operations of the timer modules **32**. A stationary computing platform, such as a desktop personal computer, may provide the centralized processor and the centralized memory for the food timing system. The stationary computing platform may also be a dedicated computing system, such as a personal computer, that communicates with other stationary and/or mobile computers in the food timing system. Alternately, a mobile computing platform may provide the centralized processor and the centralized memory for the food timing system. The mobile computing platform may be a laptop personal computer, a personal digital assistant ("PDA"), or a custom designed portable computing and communication device. Furthermore, both the stationary computing and the mobile computing platforms may be used so that the stationary computing platform can provide the centralized processor and the centralized memory for the food timing system, and the mobile computing platform can provide mobile or remote access to the food timing system. For example, an operator may link a PDA to the centralized processor and the centralized memory to remotely access the operational information of the food timing system. Accordingly, the operational parameters of the food timing system may be remotely adjusted, new parameters may be remotely input into the food timing system, and the operation of the food timing system may be remotely monitored. In a wireless food timing system, the components of the food timing system are linked in a wireless network in compliance with one or more wireless networking standards such as the IEEE 802.11b standard for wireless networking.

In a second embodiment (not shown), each timer module **32** includes a processor and a memory for managing the connectivity, information sharing, and coupled operations of the and timer modules **32**. In a third embodiment (not shown), only one of the timer modules **32** includes a processor and a memory and manages the connectivity, information sharing, and coupled operations of the timer modules **32**. The wired and wireless networking configurations as described in relation to the first embodiment are equally applicable to both the second and third embodiments.

Referring to FIGS. **3-10**, several food holding devices **30** are shown in more detail. Each food holding device **30** includes holding compartments **34** capable of maintaining food at a desired temperature. The temperature of each holding compartment **34** can be set and adjusted by a user with a temperature control device **36**, which includes a temperature display device **38** and temperature input devices **40**. The input devices **40** include activation/selection but-

tons, adjustment dials or buttons, or any other input device for allowing a user to set and adjust the temperatures of the holding compartments **34**. In one embodiment, as shown in FIG. **4**, the temperature input devices **40** include an "ACTUAL TEMP" button **42**, a "SET POINT" button **44**, a control button **45**, an increase-temperature button **46** and a decrease-temperature button **48**. Pressing the "ACTUAL TEMP" button **42** shows the actual temperature of a selected holding compartment **34**. Pressing the "SET POINT" button **44** in combination with the control button **45** places the temperature control device **36** in temperature setting mode, which allows a user to set the temperature of one or more selected holding compartments **34** by increasing or decreasing temperature values with increase-temperature button **46** and decrease-temperature button **48**, respectively, while the temperature value is being displayed on the temperature display device **38**. In the temperature setting mode, the user can also set one temperature for the food holding device **30** (i.e., all food holding compartments **34**).

Preferably, the holding compartments **34** are arranged in the food holding devices **30** in a rectangular array with one or more holding compartments **34** in each row and one or more holding compartments **34** in each column. Depending on the function of the food holding device **30** (i.e., food storage or food preparation and the type of food product held within), each holding compartment **34** (shown in FIGS. **3-6**) is configured for receiving a food holding container **50** (shown in FIG. **4**), cavities **54** (shown in FIGS. **7** and **8**) for receiving other types of food containers (e.g., disposable sandwich boxes), or simply configured for receiving food without any container or bin (shown in FIG. **9**). For example, FIG. **3** shows a food holding device **30** with two rows and four columns of holding compartments **34** for receiving food holding containers **50**. FIG. **8** shows a food holding device **30** that is used for holding cooked pizza, which is configured to receive typical pizza packaging boxes (i.e., small, medium, large, etc.) in cavities **54**. Additionally, as shown in FIG. **10**, each holding compartment **34** may have installed therein a gliding rack **52** for receiving a food holding container **50**. The gliding rack **52** provides support for a food holding container **50**, while being slidably pulled in and out of the food holding compartment **34**. Thus, a user can completely pull out a food holding container **50** with the gliding rack **52** from an associated food holding compartment **34** and access the food therein without needing to support the weight of the food holding container **50** with one or both hands.

Referring to FIGS. **3** and **4**, each timer module **32** for use with a food holding device **30** includes timers (not shown), display devices **60**, timer status indicators **62**, and timer buttons **64**. Each timer module **32** is associated with a food holding device **30** and may be either integrated with, attached to or placed proximate to the associated food holding device **30**. One of ordinary skill in the art will readily appreciate that association of a timer module **32** with a food holding device **30** by methods just described may provide communication between the timer module **32** and the food holding device **30**. For instance, operating parameters of a food holding device, such as temperature settings may be communicated to the timer module **32** so that such data may be available to the timing system. Additionally, the timing system may be capable of issuing commands to alter such operational parameters that can be communicated to the food holding device **30** through an associated timer module **32**.

The timers of the timer modules **32** measure the holding period of food in each holding compartment **34** of the food holding device **30**. The holding period of food in a holding compartment **34** is measured from the time the food is placed in the holding compartment **34** to when the food has expired, i.e., the food is no longer fit to be served to customers. Each display device **60** is associated with a holding compartment **34** and displays information about the food therein. The display devices **60** display the identity of the food that is held in the holding compartments **34**, but can display or indicate a variety of information about the food. The display devices **60** are capable of displaying alphanumeric information, graphic information, or both about the food. Displaying the identity of a food product can be accomplished by alphanumerically displaying the name of the food product or an abbreviation thereof, such as "EGGS" for eggs, or "BISC" for biscuits (shown in FIGS. **3** and **4**). Alternately, the identity of a food can be displayed graphically. For example, an image of an egg can be displayed on a display device **60** (not shown) to show that eggs are being held in the associated holding compartment **34**.

The display devices **60** are positioned on the timer modules **32** such that a user can visually determine which display device **60** is associated with which holding compartment **34**. FIGS. **3**, **4** and **5-8** show two alternate methods of positioning each display device **60** relative to an associated holding compartment **34**. In a first method, as shown in FIGS. **3** and **4**, each display device **60** is positioned near an associated holding compartment **34** so that a user of the food holding device **30** can intuitively determine the association of the display device **60** with its associated holding compartment **34**. Additionally, if a display device is equally near two or more holding compartments **34**, a visual indicator **66**, such as an arrow, can direct a user to the holding compartment **34** to which the display device **60** is associated. FIGS. **5** and **6** show a second method of visually associating a display device **60** with a holding compartment **34**. The display devices **60** are arranged in a display block **68** on the food holding device **30**. The arrangement of the display devices **60** on the display block **68** relative to each other corresponds to the arrangement of the holding compartments **34** relative to each other. For example, as shown in FIGS. **5** and **6**, the display device **60** in the first column and first row (taken from the left side) of the display block **68** is associated with the holding compartment **34** in the first row and first column (taken from the left side) of the food holding device **30**. Similarly, as shown in FIG. **8**, the top display device **60** in the display block **68** is associated with the top holding compartment **34** in the food holding device **30**.

Each timer status indicator **62** is associated with a holding compartment **34** and indicates the status of the food therein. The timer status indicators are preferably LEDS (light emitting diodes) that are capable of displaying any color by using either the three traditional primary colors of red, yellow, and blue, or the three secondary colors of magenta, yellow, and cyan. The LEDS are also capable of being on or off, and displaying flashing on/off with the speed of the flashing being adjustable. One of ordinary skill in the art will readily appreciate the flexibility of the LEDS to display any color for indicating the status of a food product associated with the timer status indicator. However, one of ordinary skill in the art will also readily appreciate that frequent use of the colors green, red and yellow to indicate status of a procedure or to direct a course of action in numerous areas of art has made these colors recognizable and even intuitive as to what each color indicates. For instance, a green indication is intuitively associated with normal, safe, or an unalarming status, the color yellow is intuitively associated with a cautionary status, and the color red is intuitively

associated with an alarm, unsafe, or stop status. Accordingly, in the preferred embodiment, the LEDS of the timer status indicators **62** display the colors green, red and yellow to indicate the status of food in food holding compartments **34**. However, as described in the foregoing, additional status indications may be used in the disclosed timer system as the LEDS are capable of displaying an unlimited number of colors. Furthermore, an operator may configure the disclosed timer system so that the LEDS indicate colors other than green, yellow and red for the status of food in the food holding compartments **34**.

Referring to TABLE 1, each timer status indicator **62** includes a first indication indicating that the associated holding compartment **34** is ready to receive a food product and a second indication indicating that the food in the associated holding compartment **34** has expired. The first indication may be indicated with a steady red LED, and the second indication may be indicated with a red flashing LED. The timer status indicators further include a number of timing indications indicating the status of the food in the holding compartment **34** when the holding period of food is being measured and the food has not yet expired. The holding indications include a third indication, which indicates that the food in the associated holding compartment **34** has been held for the longest time relative to holding times for the same type of food being held in other holding compartments **34**. In effect, the third indication indicates to a user that the food associated with the third indication is to be used before using the same type of food with shorter holding times in other holding compartments **34**. The third indication may be indicated with a green LED. The other holding compartments that hold food with a shorter holding time, however, will indicate a fourth indication. In effect, the fourth indication indicates that another holding compartment has the same type of food that has been held for a longer time. The fourth indication may be indicated with a steady yellow LED. When the LEDS flash on/off in any of the above-disclosed colors, the intention is to alert a user to take a specific action regarding the food products in the holding compartments **34**. As disclosed, a red flashing LED indicates that the food product has expired and should be discarded. A green flashing LED and a yellow flashing LED, being fifth and sixth indications respectively, indicate that the food in the associated holding compartment **34** is near expiration. The fifth indication is activated when the time remaining before a food in an associated holding compartment **34** expires is less than or equal to the time it takes to cook that food, and when the holding time of the food is the longest compared to the holding times for the same type of food in the other holding compartments **34**. The sixth indication is activated when the time remaining before a food in an associated holding compartment **34** expires is less than or equal to the time it takes to cook that food, and when another holding compartment **34** has the same food product with a longer holding time. In effect, the fifth and sixth indications indicate to a user that more of the food that is about to expire should be cooked so as to provide a fresh supply of that food for service to customers. Additionally, the fifth indication indicates to a user to use the food product in the holding compartment **34** that is associated with the fifth indication first, and the sixth indication indicates to a user that another holding compartment **34** is holding the same type of food product with a longer holding time (i.e., indicating a fifth indication). The timer status indicator also includes a seventh indication indicating that the associated holding compartment **34** is not active. The seventh indication is preferably indicated with the LED being turned off.

TABLE 1

LED	Indication	Action
STEADY RED (first indication)	Standby	None. Associated food holding compartment 34 is ready for receiving and timing a food product.
FLASHING RED (second indication)	Food product has expired.	Discard food product.
STEADY GREEN (third indication)	Timing in progress. Oldest food product of its kind.	Use this food product first.
STEADY YELLOW (fourth indication)	Timing in progress. And older food product of this kind is available.	Use the older food product of this kind first.
FLASHING GREEN (fifth indication)	Timing in progress. Food product is near expiration and it is the oldest food product of its kind.	Cook more of this food product. Use this food product first.
FLASHING YELLOW (sixth indication)	Timing in progress. Food product is near expiration and an older food product of this kind is available.	Cook more of this food product. Use the older food product first.
OFF (seventh indication)	food holding device not operating	None

Timer activation/deactivation may be automatically performed when a food holding container **50** is inserted/removed from an associated food holding compartment **34**, respectively. For instance, a sensor on a timer module **32** can detect insertion and removal of a food holding container **50** into and from an associated food holding compartment **34**, respectively. In another preferred example, a bar code label or a smart tag (i.e., a programmable chip) may be placed on each food holding container **50** for detection and reading thereof by an associated timer module **32**. In such a case, the bar code label or the smart tag may convey information about the food in the food holding container **50** to the timer system. When a smart tag is placed on the food holding container **50**, the smart tag may convey information about the food in the food holding container **50** to the timer system, and the timer system may store information on the smart tag so that such information remains with the food holding container **50** no matter where in the restaurant and into which food holding device **30** the food holding container **50** is transferred. The information on a smart tag may be programmed, updated, or reset by a user or automatically depending on events, time of day, or other restaurant operating conditions and criteria.

A timer may also be activated/deactivated by an associated timer button **64**. Pressing a timer button **64** when its associated timer is inactive will activate the timer, and pressing the timer button **64** when the timer is active will inactivate the timer. In another preferred example, a timer may be activated/deactivated by user voice commands with a microphone placed on an associated timer module **32** that can pick up verbal commands such as "activate," "inactivate," "on," "off," or the like. In yet another preferred example, a user may activate/deactivate a timer remotely by a wireless or wired device such as a PDA, a laptop personal computer, or a customized computing and communication device (i.e., display and sound capable) that is in communication with the disclosed timing system.

A food product in a holding compartment **34** can be transferred to another holding compartment **34** of the same or different food holding device **30**. The timer module **32** is

capable of transferring the holding time of the food being transferred and all information about that food to the timer that is associated with holding compartment **34** that is receiving the transferred food product. The timer of the receiving holding compartment **34** receives the elapsed holding time of the transferred food product and begins measuring the holding time from the elapsed time. Additionally, the information about the transferred food product will be used by the timer status indicator **62** of the receiving holding compartment **34** to signal the user to take a required action if necessary (i.e., cook more food, discard expire food, etc.). In food timing systems where the timer module **32** is in communication with the food holding device, the temperature of the holding compartment **34** may also be adjusted by an associated timing module **32** if necessary to accommodate the transferred food product. The temperature adjustment may only be desired if the transferred food product is different than the food product for which the receiving holding compartment **34** was configured for prior to the transfer.

Each food timer module **32** further includes a programming system (not shown) for receiving input from a user regarding food products and the operational parameters of each timer. The programming system includes an input system **80** and may include one or more display devices (not shown). The programming system may use the display devices **60** of the timer module **32** in lieu of one or more separate, dedicated display devices. As shown in FIGS. **3** and **4**, the input system **80** may include an up-arrow button **82** and a down-arrow button **84** for increasing and decreasing the value of a parameter, or scrolling up and down through a list of parameters, respectively. The programming system further includes one or more selection/activation buttons **86** (only one shown in FIGS. **3** and **4**) for activating and/or selecting an operational parameter or mode for the food holding device **30**, or obtaining information about the food products being held in the food holding device **30**. The programming system of the timer module **32** for each food holding device **30** is operationally coupled to the display devices **60**, the timers, the timer status indicators **62**, and the timer buttons **64** of the food holding device **30**. For timing systems that provide communication between the timer module **32** and an associated food holding device **30**, the programming system may also be coupled to the food holding device **30**.

The food timer module **32** further includes a food menu (not shown) containing information about the food products that are held in the holding compartments **34**. The information includes the identity of each food product, the holding time of a food product before it expires, and a cook time for each food product. The food menu contains information about the food that is typically sold in the restaurants in which the food holding devices **30** are used, particularly foods that involve preparation before sales (e.g., rethermalization, cooking, warming, thawing, etc.). The food menu further includes the capability to group selected food products into activity menus, which contain food products that are either served together or served at a particular period during the day. Each activity menu contains a food product assignment for one or more timers. Selection of an activity menu assigns the foods in that activity menu to the timers associated with the holding compartments **34** in which the foods in the activity menu will be held. Furthermore, the assignment of food products in the activity menu to the timers also makes available to each timer information about its assigned food product. For example, a specific breakfast activity menu may assign eggs to one or more timers, sausage to one or more other timers, and bacon to the remaining timers. A lunch activity menu, for example, may assign burgers to one or more timers, chicken to one or more other timers, and fish to the remaining timers.

The food products in the food menu and the groupings of the food products in each activity menu can be pre-programmed to default values or customized by a user. The programming, selection, and activation of the food products in the food menu or the food products in the activity menu can be accomplished by the input system **80** of the programming system. Additionally, the activity menus and contents thereof may be automatically changed based on time of day or event. For instance, at a certain time of day, the activity menu may be automatically changed from breakfast to lunch. On weekends, for instance, the time when the activity menu changes from breakfast to lunch may be later or sooner depending on the needs of the restaurant. One of ordinary skill in the art will readily appreciate that the programming system of the timing system provides a user with the ability to set automatic activity menu changes based on any factor that may be specific to the operation of a particular restaurant.

When the timers do not have any food product assignments and the associated holding compartments **34** of the timers are inactive, the LEDS of the timer status indicators **62** will be off and the display devices **60** display nothing or a series of dashes (i.e., "- - -"). Each timer of a timer module **32** is assigned a food product prior to activation. The assignment of food products to the timers makes available information about the food products to the timers. To select an activity menu, a user while pressing and holding an activity button **88** scrolls through the available activity menu with the up-arrow button **82** and the down-arrow button **84**. Pressing the activity button **88** displays the available activity menus on the display devices **60** so as to allow the user to visually select an activity menu. Releasing the activity button **88** when the desired activity menu appears on the display device **60** selects the displayed activity for the timer module **32**.

When an activity menu is selected, each food product in the activity menu and information about the food product contained in the food menu is assigned to a timer. Also, the display devices **60** will display the identity of each food product assigned to an associated timer. Each timer is now ready to measure the holding time of a food product that will be held in an associated holding compartment **34**, which will be shown by a first indication on the timer status indicators **62**. Thus, the timers that have been assigned food products will have the LED of their associated timer status indicators **62** displaying a steady red color.

To start a timer, a user places a holding bin **52** having food product therein in the holding compartment **34** that is associated with the timer. Thereafter, the user activates the timer, which will change the timer status indicator **62** to one of the holding indications depending on the timing status of the same type of food product in other holding compartments **34**. If no other holding compartment **34** in the food holding device **30** is holding the same type of food product, the LED of the timer status indicator will display a steady green. If there are other holding compartments **34** in the food holding device **30** that are holding the same type of food product, the LED of the timer status indicator **62** of the holding compartment **34** that is holding the food product with the longest elapsed holding time will display a steady green. The LEDS of the timer status indicators **62** of all other food holding compartments **34** that are holding the same type of food product with the shorter elapsed holding times

will indicate a steady yellow. Thus, the timer module **32** directs a user to always use the food product with the longest elapsed holding time first.

The LEDs of the timer status indicators **62** also have flashing indications indicating that more of the food product held in an associated holding compartment **34** should be cooked. An LED of a timer status indicator **62** begins flashing when the time remaining on an associated timer before the food product expires is equal or less than the time required to cook more of that food product. Thus, a flashing LED indicates to a user to cook more of the food product being held in the associated holding compartment **34**. A flashing yellow LED indicates to a user to cook more of the food product and that another holding compartment **34** in the food holding device **30** is holding the same type of food product with a longer holding time. A flashing green LED indicates to a user to cook more of the food product, and that the food product has the longest holding time as compared to other holding compartments **34** that are holding the same type of food product. When a product expires, the LED of the associated timer status indicator displays a flashing red. Additionally, the display device **60** associated with the holding compartment **34** in which the expired food product is held may flash the abbreviated name of the food product. The user is directed by the flashing red display of the LED to discard the expired food.

A user can transfer a food product and its timing information from one holding compartment **34**, i.e., the origin holding compartment **34**, to another holding compartment **34**, i.e., the destination holding compartment **34**. One of ordinary skill in the art will readily appreciate that the disclosed timing system can be configured to provide a desired transfer procedure or sequence. Such a transfer procedure may include a sequence of inputs to the timing system and outputs from the timing system to guide a user through the transfer procedure. However, in the preferred embodiment, the transfer procedure is based on the following procedure. A user will press a transfer button, which causes the displays **60** of active timers to brighten and the displays **60** of inactive timers to dim. The transfer button may be a button that is dedicated to performing such a function, such as button **90** shown in FIG. **3**. The transfer button may also be a multi-function button that performs other functions. For example, the up-arrow button **82** can take on the function of a transfer button when the timer system is in running mode, and take on the up-arrow function when the timer system is in programming mode. After the transfer button **90** or **82** is pressed, the brightened displays **60** of the active timers inform a user about the food holding compartments **34** that are active and available as origin food holding compartments **34** for the transfer. The user then removes the food in the origin food holding compartment and deactivates its associated timer. The user then depresses the transfer button **90** or **82**, which causes the displays **60** of all active timers to dim and the displays **60** of all inactive timers to brighten. Thus, the brightened displays **60** of the inactive timers inform the user about the food holding compartments **34** that are inactive and available as destination food holding compartments **34** for the transfer. The user subsequently completes the transfer procedure by placing the food that was removed from the origin food holding compartment **34** into the destination food holding compartment **34** and activating the timer associated with the destination food holding compartment **34**.

Referring to FIG. **2**, the timer modules **32** and the food holding devices **30** may be connected together in a wired or wireless network. The networking of the timer modules **32** and the food holding devices **30** provides for efficient and versatile food timing operations. The food menu for each timer module **32** can be shared with other timer modules **32**, thereby allowing other timer modules access to information regarding each food product in the food menu. Additionally, user customization of a food menu or an activity menu will be available to other timer modules **32**.

A significant advantage of the connectivity of the timer modules **32** is realized when transferring food products from an origin holding compartment **34** of a food holding device **30** to a destination holding compartment **34** in another food holding device **30**. Because the timer modules **32** and the food holding devices **30** are connected in a network, transferring a food product from an origin holding compartment **34** to a destination holding compartment **34** in a different food holding device **30** will transfer the holding time of the food product and all the information about the food product to the timer associated with the destination holding compartment **34**. Additionally, if the destination holding compartment **34** was originally assigned a different food product, the food timing system will assign the transferred food product to the destination holding compartment **34**. However, after the time for the transferred food product expires or is cancelled in the destination food holding compartment **34**, the timer system will revert back to the original assignment of the food holding compartment **34**. For a timer system that provides communication between the timer modules **34** and the associated food holding devices **30**, the reassignment of the transferred food product to the destination holding compartment **34** may also increase or decrease the temperature of the destination holding compartment **34** to the temperature required for holding the transferred food product.

Connectivity of the timer modules **32** in a network also allows for better management of food service operations in a restaurant. Inventory tracking algorithms can track food related information, including but not limited to such information as food product input/output of each food holding device **30**, the amount of food products discarded, and the response of food service employees to various action signals issued by the timer modules **32** (i.e., cook more food, discard expired food, etc.). The connectivity of the timer modules **32** in a network environment provides a platform for connecting and communicating with other devices in a restaurant. For example, the cash registers from which a food order is received can be connected to the network of the timer modules **32** to better provide the timer modules **32** with information on the rate at which certain quantities of various food products should be prepared. Furthermore, such tracking of food orders and preparation will provide historical data that can be processed to provide the timer module **32** with the capability to adapt to food service requirements of a restaurant during certain periods of each day. One of ordinary skill in the art will appreciate the limitless ways by which the networking of the timer modules **32** can be utilized to significantly improve the efficiency, versatility and adaptability of the disclosed food timing system when used in a restaurant.

The timer module **32**, as disclosed in the above detailed description, is equally applicable to food holding devices **30** including food preparation devices such as ovens, grills, broilers, fryers, microwave ovens, etc. For example, FIG. **9** shows the timer module **32** applied to a grill **100**. The surface **102** of the grill **100** can be visually compartmentalized to create preparation areas **104**, which are analogous to holding compartments **34** in a food holding device **30**. Each preparation area **104** is associated with a timer (not shown)

in the timer module **32**. A display device **60**, a timer status indicator **62**, and a timer button **64** is associated with each preparation area **104** of the grill **100**. The display devices **60**, timer status indicators **62**, and timer buttons **64** are arranged in the display blocks **68**. The input system **80** of the programming system (not shown) allows a user to select the default food menu and activity information or customize such information about food products that are cooked or warmed on the grill **100**.

The operation of the timer module **32** as disclosed in the above detailed description is also equally applicable to the grill **100**. If a food product is being cooked on the grill **100**, the information about the food product that is assigned to an associated timer may include the food product's cook time so that the timer module **32** can alert a user that the food product is finished cooking. The information may also include the time that a cooked food product can remain on the grill before being overcooked and no longer fit for service to customers. A food product can be transferred from one preparation area **104** to another preparation area **104** on the grill **100**. Furthermore, the grill **100** can be networked to other food preparation and holding devices in the food preparation area **22** to allow the transfer of food products from the grill **100** to those devices. For example, after a food product is cooked on the grill **100**, a user may be alerted by an associated timer status indicator **62** of the timer module **32** of the grill **100** that the food product is cooked. The user can then transfer the cooked food product to a holding compartment **34** of a food holding device **30**, which is a food storage device. During the transfer, information about the cooked food product is transmitted to the timer module **32** of the food storage device. The transfer is finalized by activating the timer of the food storage device that is associated with the transferred food product. As shown by the above example, one of ordinary skill in the art will appreciate the flexibility and versatility of the disclosed food timing system for it can be applied to any food preparation and storage device that is typically used in restaurants.

Several preferred embodiments of the present invention have been shown and described to illustrate the advantages and features of the present invention. Many additional changes and modifications could be made to the invention without departing from the fair scope and spirit thereof. The scope of some changes is discussed above. The scope of others will become apparent from the appended claims.

The invention claimed is:

1. A food holding device comprsising:

a plurality of holding compartments adapted to receive food products, each holding compartment capable of maintaining a temperature of an associated food product;

a plurality of timers, each timer associated with a holding compartment and adapted to measure the holding period of the food product in the associated holding compartment;

a plurality of display devices, each display device associated with a holding compartment and adapted to display information about the associated holding compartment including information about the food product therein;

a plurality of timer status indicators, each timer status indicator associated with a timer and adapted to indicate a status of the associated timer;

a plurality of timer buttons, each button associated with a timer and operatively coupled to the associated timer; and

a transfer button adapted to initiate transfer of a food product from a first holding compartment to a destination holding compartment, wherein the timers are operatively coupled and adapted to transfer the holding period of the food product from a timer associated with the origin holding compartment to a timer associated with the destination holding compartment when the food product in the origin holding compartment is transferred to the destination holding compartment.

2. The food holding device of claim **1**, each timer status indicator comprising a first indication indicating that an associated holding compartment is ready to receive a food product and the associated timer is not active, a plurality of timing indications indicating that the associated holding compartment is holding a food product and the associated timer is measuring the holding period of the food product therein, and a second indication indicating that the food product in the associated holding compartment has expired.

3. The food holding device of claim **2**, the plurality of timing indications comprising a third indication indicating that a food product in an associated holding compartment has been held for the longest time relative to the holding times for the same type of food product in other holding compartments of the food holding device, a fourth indication indicating that another holding compartment is holding the same type of food product that has been held for a longer time, fifth and sixth indications indicating that a food product in an associated holding compartment will soon expire, and a seventh indication indicating that the associated holding compartment in not active.

4. The food holding device of claim **1**, further comprising a programming system adapted to receive input including information about food products and operational parameters for each of the timers, the programming system further including a programming display device and an input device, wherein the programming system is opertively coupled to the holding compartments, the display devices, the timers, the timer status indicators and the timer buttons.

5. The food holding device of claim **1**, further comprising:

a food menu containing information about food products including at least the identity of each food product, a holding time for each food product and a cook time for each food product;

a plurality of activity menus, wherein each activity menu includes a selectable group of food products from the food menu; and

a croup selection button adapted to provide user selection of an activity menu, wherein selection of an activity menu makes available information about the food products in the selected activity menu to the display devices, timers and timer status indicators.

6. The food holding device of claim **1**, wherein the display devices are adapted to display alphanumeric information.

7. The food holding device of claim **1**, wherein the display devices are adapted to display graphic information.

8. The food holding device of claim **1**, wherein the display devices are arranged in a display block, the arrangement of the display devices in the display block corresponding to the arrangement of the holding compartments in the food holding device, further wherein the position of a first display device relative to a second display device in the display block corresponds to the position of a first holding compartment associated with the first display device relative to a second holding compartment associated with the second display device.

9. The food holding device of claim 8, further comprising visual indicators indicating the association of each of the display devices with an associated holding compartment.

10. The food holding device of claim 1, wherein each display device is arranged near an associated holding compartment wherein the position of the display device relative to the associated holding compartment indicates the display device is associated with the holding compartment.

11. The food holding device of claim 10, further comprising visual indicators indicating the association of each of the plurality of the display devices with an associated holding compartment.

12. A food timing system comprising:

a centralized processor;

a centralized memory;

a plurality of food holding devices, each of the plurality of holding devices comprising:

a plurality of holding compartments adapted to receive food products, each holding compartment capable of maintaining a temperature of an associated food product;

a plurality of timers, each timer associated with a holding compartment and adapted to measure the holding period of the food product in the associated holding compartment;

a plurality of display devices, each display device associated with a holding compartment and adapted to display information about the associated holding compartment including information about the food product therein;

a plurality of timer status indicators, each timer status indicator associated with a timer and adapted to indicate the status of the associated timer; and

a plurality of timer buttons, each button associated with a timer and operatively coupled to the associated timer; and

a transfer button adapted to initiate transfer of a food product from an origin holding compartment to a destination holding compartment; and

wherein the centralized processor, the centralized memory and the plurality of food holding devices are operatively coupled in a network and adapted to share information, and wherein the food holding devices are adapted to transfer the holding period of a food product from a timer associated with the origin holding compartment to a timer associated with the destination holding compartment when the food product in the origin holding compartment is transferred to the destination holding compartment.

13. the food timing system of claim 12, wherein the origin holding compartment and the destination holding compartment are in the same food holding device.

14. The food timing system of claim 12, wherein the origin holding compartment and the destination holding compartment are in different food holding devices.

15. The food timing system of claim 12, each timer status indicator comprising a first indication indicating that an associated holding compartment is ready to receive a food product and the associated timer is not active, a plurality of timing indications indicating that the associated holding compartment is holding a food product and the associated tinier is measuring the holding period of the food product therein, and a second indication indicating that a food product in the associated holding compartment has expired.

16. The food timing system of claim 15, the plurality of timing indications comprising a third indication indicating that a food product in an associated holding compartment has been held for the longest time relative to the holding times for the same type of food product in other holding compartments of the food timing system, a fourth indication indicating that another holding compartment is holding the same type of food product that has been held for a longer time, fifth and sixth indications indicating that a food product in an associated holding compartment will soon expire, and a seventh indication indicating that the associated holding compartment is not active.

17. The food timing system of claim 12, each food holding device further comprising a programming system adapted to receive input including information about food products and operational parameters for each of the holding compartments of the food holding device, the programming system further including a programming display device and an input device, wherein the programming system is opertively coupled to the holding compartments, the display devices, the timers, the timer status indicators and the timer buttons of the food holding device.

18. The food timing system of claim 12, each food holding device further comprising:

a food menu containing information about food products including at least the identity of each food product, a holding time for each food product and a cook time for each food product;

a plurality Of activity menus, wherein each activity menu includes a selectable group of food products from the food menu; and

a group selection button adapted to provide user selection of an activity menu, wherein selection of an activity menu makes available information about the food products in the selected activity menu to the display devices, timers and timer status indicators.

19. The food timing system of claim 12, wherein the display devices are adapted to display alphanumeric information.

20. The food timing system of claim 12, wherein the display devices are adapted to display graphic information.

21. The food timing system of claim 12, wherein the display devices are arranged in a display block, the arrangement of the display devices in the display block corresponding to the arrangement of the holding compartments in a food holding device, further wherein the position of a first display device relative to a second display device in the display block corresponds to the position of a first holding compartment associated with the first display device relative to a second holding compartment associated with the second display device.

22. The food timing system of claim 21, further comprising visual indicators indicating the association of each of the display devices with an associated holding compartment.

23. The food timing system of claim 12, wherein each display device is arranged near an associated holding compartment wherein the position of the display device relative to the associated holding compartment indicates the display device is associated with the holding compartment.

24. The food timing system of claim 23, further comprising visual indicators indicating the association of each of the plurality of the display devices with an associated holding compartment.

25. The food timing system of claim 12, wherein the network coupling the centralized processor, the centralized memory and the plurality of food holding devices is a wired network.

26. The food timing system of claim 12, wherein the network coupling the centralized processor, the centralized memory and the plurality of food holding devices is a wireless network.

27. The food timing system of claim 12, wherein the food timing system further comprises at least one mobile computing platform, wherein the mobile computing platform is adapted to remotely communicate with the food timing system.

28. A timer system for use with a food preparation device:

a plurality of timers, each timer associated with a holding compartment of the food preparation device and adapted to measure the holding period of a food product therein;

a plurality of display devices, each display device associated with a holding compartment of the food preparation device and adapted to display information about the holding compartment including at least the identity of the food product therein;

a plurality of timer status indicators, each timer status indicator associated with a timer and adapted to indicate a status of the associated timer;

a plurality of timer buttons, each button associated with a timer and operatively coupled to the associated timer; and

a transfer button adapted to initiate transfer of a food product from an origin holding compartment of the food preparation device to a destination holding compartment of the food preparation device, wherein the plurality of timers of the timer system are operatively coupled and adapted to transfer the holding period of a food product from a timer associated with the origin holding compartment to a timer associated with the destination holding compartment when the food product in the origin holding compartment is transferred to the destination holding compartment.

29. The timer system of claim 28, each timer status indicator comprising a first indication indicating that an associated holding compartment is ready to receive a food product and the associated timer is not active, a plurality of timing indications indicating that the associated holding compartment is holding a food product and the associated timer is measuring the holding period of the food product, and a second indication indicating that a food product in an associated holding compartment has expired.

30. The timer system of claim 29, the plurality of timing indications comprising a third indication indicating that a food product in an associated holding compartment has been held for the longest time relative to the holding times for the same type of food product in other holding compartments of the food preparation device, a fourth indication indicating that another holding compartment is holding the same type of food product that has been held for a longer time, fifth and sixth indications indicating that a food product in an associated holding compartment will soon expire, and a seventh indication indicating that the associated holding compartment in not active.

31. The timer system of claim 28, further comprising a programming system adapted to receive input including information about food products and operational parameters for each of the holding compartments of the food preparation device, the programming system further including a programming display device and an input device, wherein the programming system is opertively coupled to each of the holding compartments of the food preparation device, the display devices, the timers, the timer status indicators and the timer buttons.

32. The timer system of claim 28, further comprising:

a food menu containing information about food products including at least the identity of each food product, a holding time for each food product and a cook time for each food product;

a plurality of activity menus, wherein each activity menu includes a selectable group of food products from the food menu; and

a group selection button adapted to provide user selection of an activity menu, wherein selection of an activity menu makes available information about the food products in the selected activity menu to the display devices, timers and timer status indicators.

33. The timer system of claim 28, wherein the display devices are adapted to display alphanumeric information.

34. The timer system of claim 28, wherein the display devices are adapted to display graphic information.

35. The timer system of claim 28, wherein the display devices are arranged in a display block, the arrangement of the display devices in the display block corresponding to the arrangement of the holding compartments in the food preparation device, further wherein the position of a first display device relative to a second display device in the display block corresponds to the position of a first holding compartment associated with the first display device relative to a second holding compartment associated with the second display device.

36. The timer system of claim 35, further comprising visual indicators indicating the association of each of the display devices with an associated holding compartment.

37. The timer system of claim 28, wherein each display device is arranged near an associated holding compartment of the food preparation device, further wherein the position of the display device relative to the associated holding compartment indicates the display device is associated with the holding compartment.

38. The timer system of claim 37. further comprising visual indicators indicating the association of each of the display devices with an associated holding compartment.

39. A food timing system for use in a food preparation area comprising:

a plurality of food preparation devices including food cooking and food storage devices, each of the food preparation devices comprising holding compartments;

a plurality of timer modules, each timer module associated with a food preparation device and comprising:

a processor;

a memory;

a plurality of timers, each timer associated with a holding compartment of the food preparation device and adapted to measure the holding period of a food product therein;

a plurality of display devices, each display device associated with a holding compartment of the food preparation device and adapted to display information about the holding compartment;

a plurality of timer status indicators, each timer status indicator associated with a timer and adapted to indicate a status of the associated timer; and

a plurality of timer buttons, each button associated with a timer and Operatively coupled to the associatcd timer; and

a transfer button adapted to initiate transfer of a food product from an origin holding compartment to a destination holding compartment; and

wherein the timer modules are operatively coupled in a network and adapted to share information, and wherein

the timer modules are adapted to transfer the holding period of a food product from a timer associated with the origin holding compartment to a timer associated with the destination holding compartment when the food product in the origin holding compartment is transferred to the destination holding compartment.

40. The food timing system of claim **39**, wherein the origin holding compartment and the destination holding compartment are in the same food preparation device.

41. The food timing system of claim **39**, wherein the origin holding compartment and the destination holding compartment are in different food preparation devices.

42. The food timing system of claim **39**, each timer status indicator comprising a first indication indicating that an associated holding compartment is ready to receive a food product and the associated timer is not active, a plurality of timing indications indicating that the associated holding compartment is holding a food product and the associated timer is measuring the holding period of the food product therein, and a second indication indicating that the food product in the associated holding compartment has expired.

43. The food timing system of claim **42**, the plurality of timing indications comprising a third indication indicating that a food product in the associated holding compartment has been held for the longest time relative to the holding times for the same type of food product in other holding compartments, a fourth indication indicating that another holding compartment is holding the same type of food product that has been held for a longer time, fifth and sixth indications indicating that a food product in an associated holding compartment will soon expire, and a seventh indication indicating that the associated holding compartment in not active.

44. The food timing system of claim **39**, each timer system further comprising a programming system adapted to receive input including information about food products and operational parameters for each holding compartment in an associated food preparation device, the programming system further including a programming display device and an input device, wherein the programming system is opertively coupled to the holding compartments of the associated food preparation device, the associated display devices of the food preparation device, the associated timers of the food preparation device, the associated timer status indicators of the food preparation device and the associated timer buttons of the food preparation device.

45. The food timing system of claim **39**, the food timer system further comprising:

a food menu containing information about food products including at least the identity of each food product, a holding time for each food product and a cook time for each food product;

a plurality of activity menus, wherein each activity menu includes a selectable group of food products from the food menu; and

a group selection button adapted to provide user selection of an activity menu, wherein selection of an activity menu makes available information about the food products in the selected activity menu to the display devices, timers and timer status indicators.

46. The food timing system of claim **39**, wherein the display devices are adapted to display alphanumeric information.

47. The food timing system of claim **39**, wherein the display devices are adapted to display graphic information.

48. The food timing system of claim **39**, wherein the display devices for each food timer system are arranged in a display block, the arrangement of the display devices in the display block corresponding to the arrangement of holding compartments of an associated food preparation device, further wherein the position of a first display device relative to a second display device in the display block corresponds to the position of a first holding compartment associated with the first display device relative to a second holding compartment associated with the second display device.

49. The food timing system of claim **48**, further comprising visual indicators indicating the association of each of the display devices with an associated holding compartments in a food preparation device.

50. The food timing system of claim **39**, wherein each display device is arranged near an associated holding compartment wherein the position of the display device relative to the associated holding compartment indicates the display device is associated with the holding compartment.

51. The food timing system of claim **50**, further comprising visual indicators indicating the association of each of the plurality of the display devices with an associated holding compartment.

52. The food timing system of claim **39**, wherein the network coupling the timer modules is a wired network.

53. The food timing system of claim **39**, wherein the network coupling the timer modules is a wireless network.

54. The food timing system of claim **39**, wherein the food timing system further comprises at least one mobile computing platform, wherein the mobile computing platform is adapted to remotely communicate with the food timing system.

* * * * *

UNITED STATES PATENT AND TRADEMARK OFFICE

CERTIFICATE OF CORRECTION

PATENT NO. : 7,258,064 B2 Page 1 of 1
APPLICATION NO. : 10/234,297
DATED : August 21, 2007
INVENTOR(S) : Dennis J. Vaseloff et al.

It is certified that error appears in the above-identified patent and that said Letters Patent is hereby corrected as shown below:

At Column 11, line 47, "comprsising" should be -- comprising --.

At Column 12, line 30, "in" should be -- is --.

At Column 12, line 48, "croup" should be -- group --.

At Column 13, line 62, "tinier" should be -- timer --.

At Column 14, line 27, "**O**f" should be -- of --.

At Column 16, line 61, "Operatively" should be -- operatively --.

At Column 17, line 32, "in" should be -- is --.

At Column 18, line 29, "compartments" should be -- compartment --.

Signed and Sealed this

First Day of April, 2008

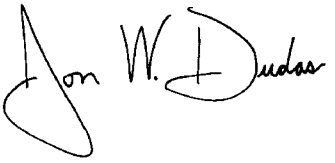

JON W. DUDAS
Director of the United States Patent and Trademark Office