Your Solutions Partner

Specifications

F.O.B Sedalia, Missouri 65302

IRHS - 23

OPTIONS:

- ☐ Metal trivet for fried/dry product
- ☐ Kitchen Minder master unit
- ☐ Kitchen Minder slave unit
- ☐ Single side control

AGENCY LISTING:

DUKE MANUFACTURING CO.
2305 N. Broadway
St. Louis, MO 63102

800.735.3853 Toll Free
314.231.5074 Fax
www.dukemfg.com

Approval Stamp(s):

PRODUCT INFORMATION:
PROJECT: _____
ITEM: _____
QUANTITY: _____

MODEL:
Product Holding Unit - Infra Red Heat Sink

IRHS-22	2 down, 2 across
IRHS-23	2 down, 3 across
IRHS-24	2 down, 4 across
IRHS-34	3 down, 4 across

BODY:

- Stainless steel exterior
- Annodized aluminum HeatSink™ with fully radiused curved corners that are easily cleaned
- Only removable part for cleaining is aluminum cover for broiled product
- Modular and scaleable design

HEATING:

- Dual technology heating to reduce temperature variance from top to bottom
- Individually controlled IR emitters pulse on and off for controlling optimum amount of energy being applied to the food
- Zoned bottom heat to provide additional holding environment customization
- IR Turbo Boost for instant shot of IR energy

CONTROLS

- Automatic pan linking to ensure FIFO
- Custom heat settings for food product
- Each compartment individually controlled
- Alphanumeric displays to indicate product description, temp and hold time remaining
- Web based programming via USB
- Day part switch for global recipe changes (B, L, D)
- Firmwave updates via USB

SHORT FORM SPECIFICATIONS:
Duke Product Holding Units - Upper IR emitters provide optimum environment for holding of all fried foods resulting in extended hold time, moist protein and crispy breading. Bottom zoned heat element provides gentle heat to minimize temperature distribution from top to bottom of pan. Alphanumeric control with independent well flexibility. Programmable via website & USB with daypart switch to facilitate global recipe changes.

Duke Manufacturing Co. EX1006 **DRAFT**
U.S. Patent No. 11,771,264

PRODUCT HOLDING UNIT - Infra Red Heat Sink

IRHS-22	2 down, 2 across
IRHS-23	2 down, 3 across
IRHS-24	2 down, 4 across
IRHS-34	3 down, 4 across

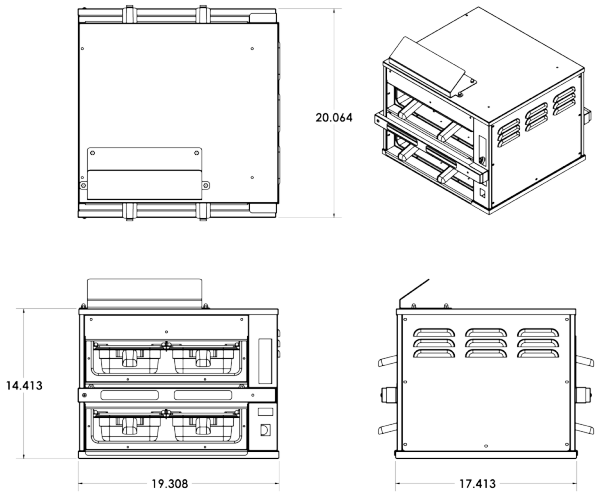

IRHS-22

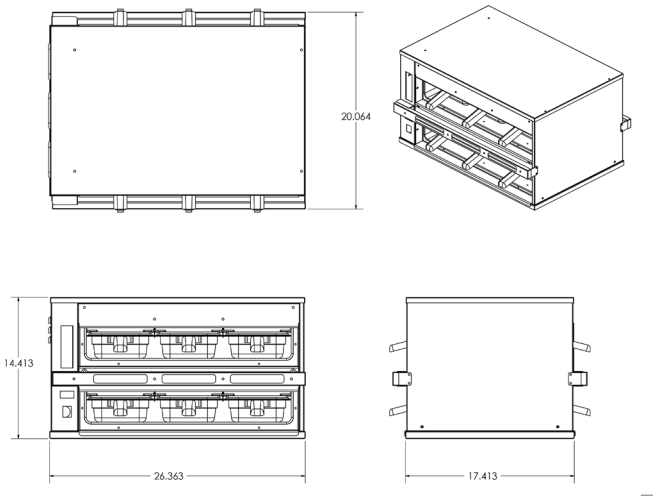

IRHS-23

DIMENSIONS:

FREIGHT CLASS: 100

Model	Height		Width		Depth		Cube ft. crated	Crated Ship Weight	
	in	cm	in	cm	in	cm		lbs	kg
IRHS-22	14.42	36.62	19.3	49.02	17.42	44.24	5.6	100	45.6
IRHS-23	14.42	36.62	26.36	66.95	17.42	44.24	7.3	125	56.7
IRHS-24	14.42	36.62	33.42	84.88	17.42	44.24	8.0	150	68.0
IRHS-34	20.92	53.13	33.42	84.88	17.42	44.24	10.5	200	90.7

ELECTRICAL SPECIFICATIONS:

Model	120 Volt - Hz 50/60		208 Volt - Hz 50/60		240 Volt - Hz 50/60	
	Amps	NEMA	Amps	NEMA	Amps	NEMA
IRHS-22	8.3	5-15P	4.9	6-15P	4.2	6-15P
IRHS-23	12.4	5-20P	7.2	6-15P	6.3	6-15P
IRHS-24			9.5	6-15P	8.3	6-15P
IRHS-34			14.3	6-20P	13.4	6-20P

DUKE MANUFACTURING CO.
2305 N. Broadway
St. Louis, MO 63102

800.735.3853 Toll Free
800.231.1130 In Missouri
314.231.5074 Fax
www.dukemfg.com

Your Solutions Partner

Specification subject to change

09/13 DRAFT
Printed in U.S.A

© 2013, Duke Manufacturing Co.