US 20040069155A1

(19) United States

(12) Patent Application Publication

(10) Pub. No.: US 2004/0069155 A1

(43) Pub. Date: Apr. 15, 2004

Shei

(54) **FOOD WARMING APPARATUS AND METHOD**

(75) Inventor: **Steven M. Shei**, Fort Wayne, IN (US)

Correspondence Address:
SENNIGER POWERS LEAVITT AND ROEDEL
ONE METROPOLITAN SQUARE
16TH FLOOR
ST LOUIS, MO 63102 (US)

(73) Assignee: **Duke Manufacturing Company**

(21) Appl. No.: **10/680,626**

(22) Filed: **Oct. 7, 2003**

Related U.S. Application Data

(63) Continuation-in-part of application No. 10/611,295, filed on Jul. 1, 2003.

(60) Provisional application No. 60/394,841, filed on Jul. 10, 2002.

Publication Classification

(51) **Int. Cl.**[7] **A47J 9/00**

(52) **U.S. Cl.** **99/448**

(57) **ABSTRACT**

In general, one embodiment of the invention is directed to food holding apparatus for holding pre-cooked food at a selected holding temperature. The apparatus comprises a cabinet having at least one holding compartment therein, and pre-cooked food in the holding compartment, the food having been previously cooked in a cooking appliance. At least one radiant heat source is spaced above the food a distance less than 12 inches for delivering radiant heat to the food. A control mechanism varies the amount of radiant heat delivered by the heat source to the food to maintain the food at the selected holding temperature. A related method is also disclosed.

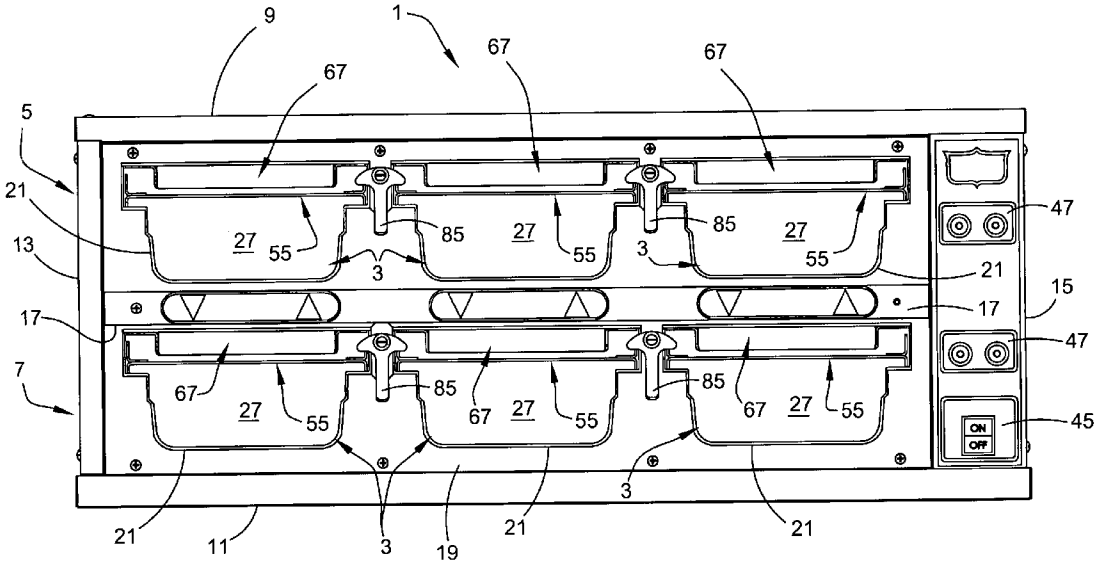

Duke Manufacturing Co. EX1016
U.S. Patent No. 11,771,264

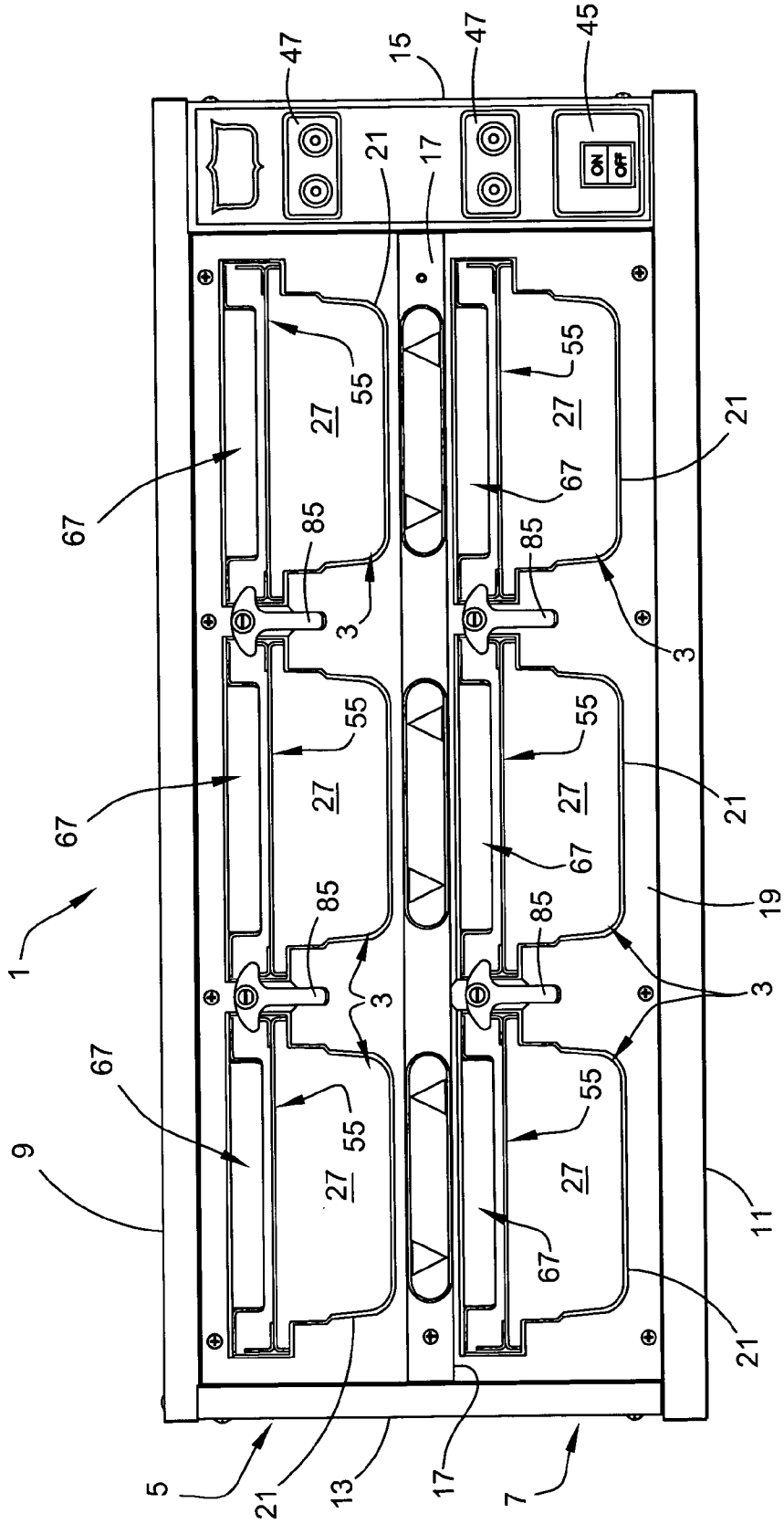

FIG. 1

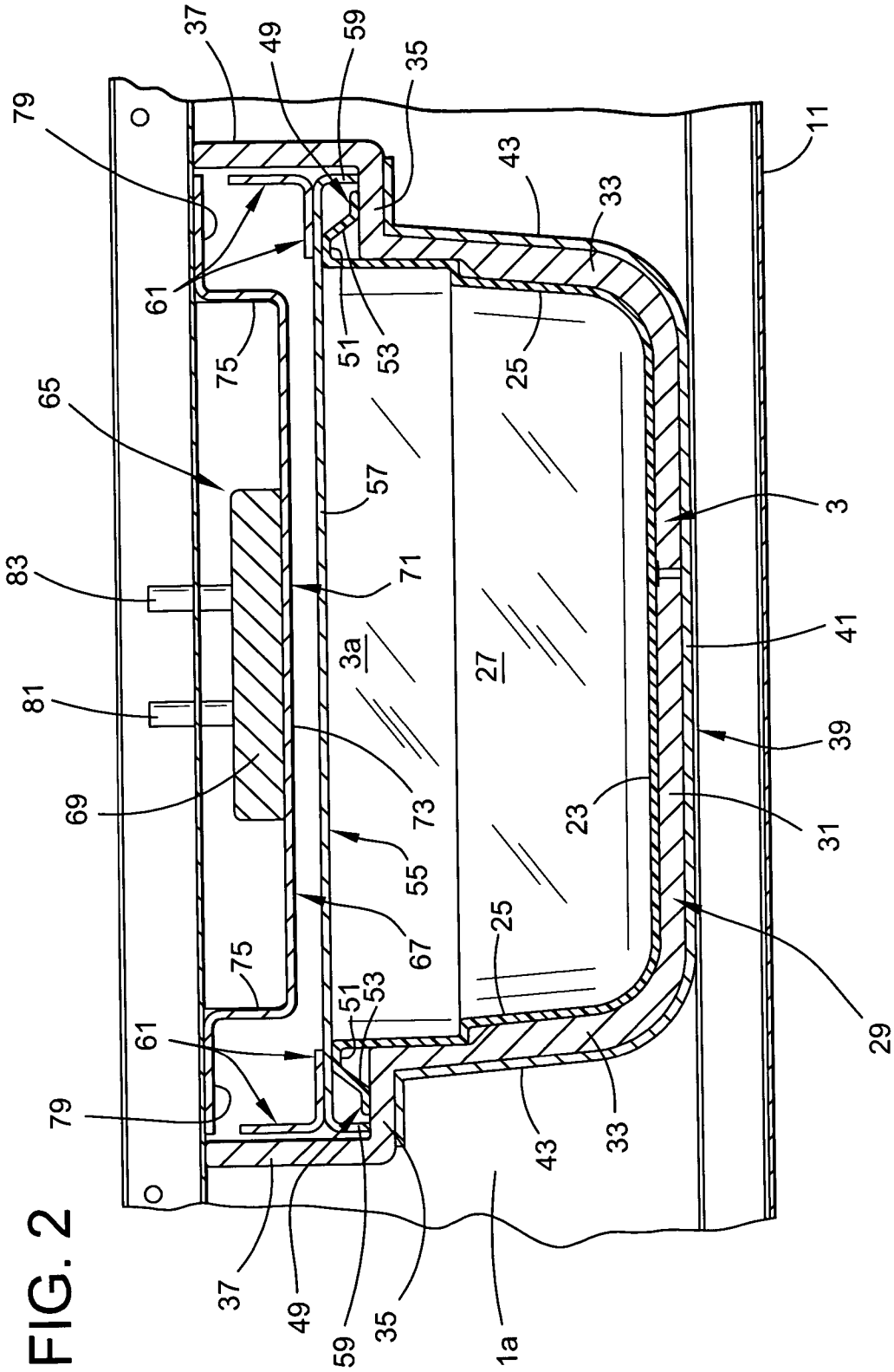
37
49
59
35
79
11
43
33
61
51
53
75
25
65
57
3
83
71
41
3a
27
81
39
69
73
23
31
55
67
25
75
51
53
61
29
79
43
33
37
49
59
35
1a

FIG. 2

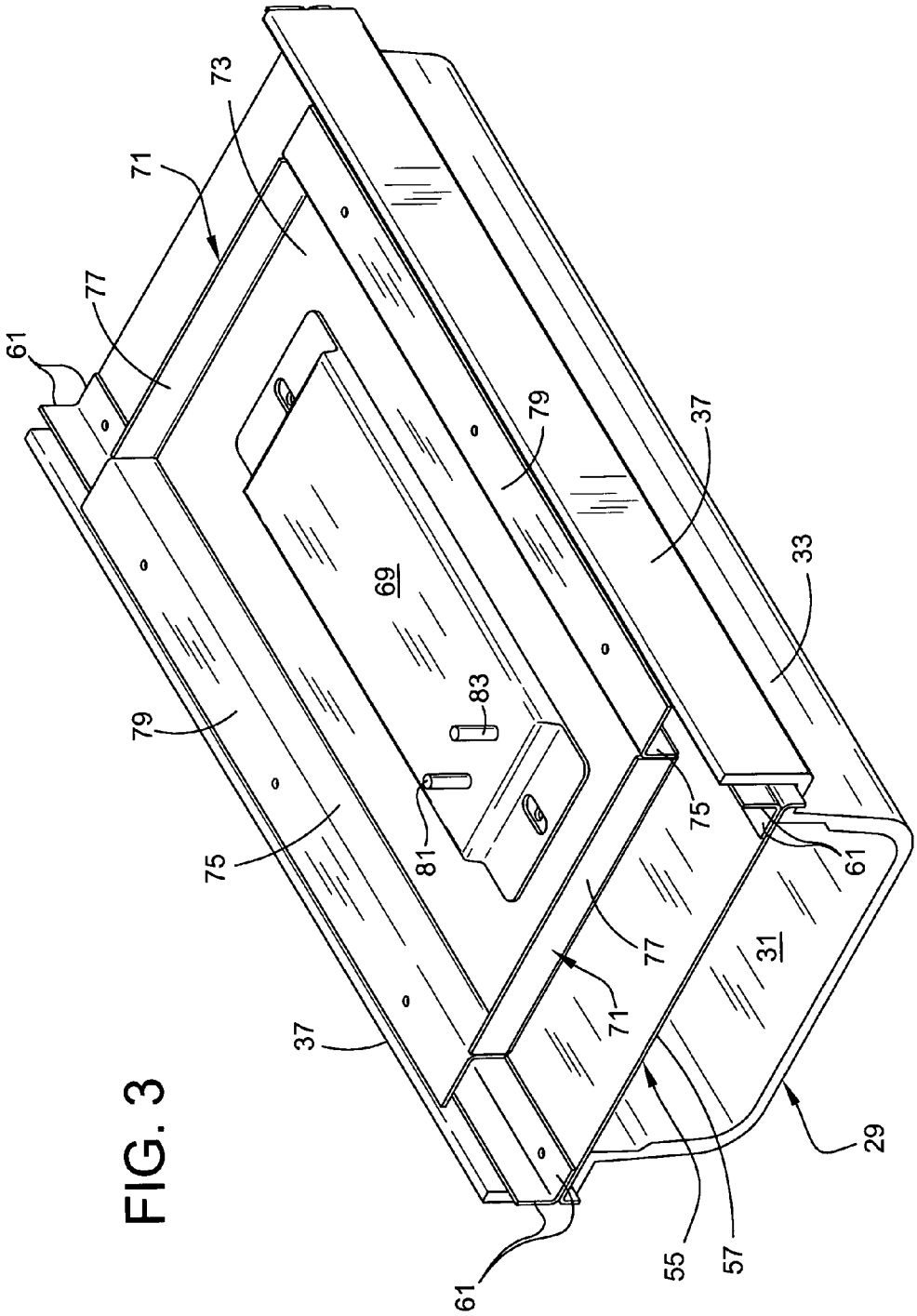

FIG. 3

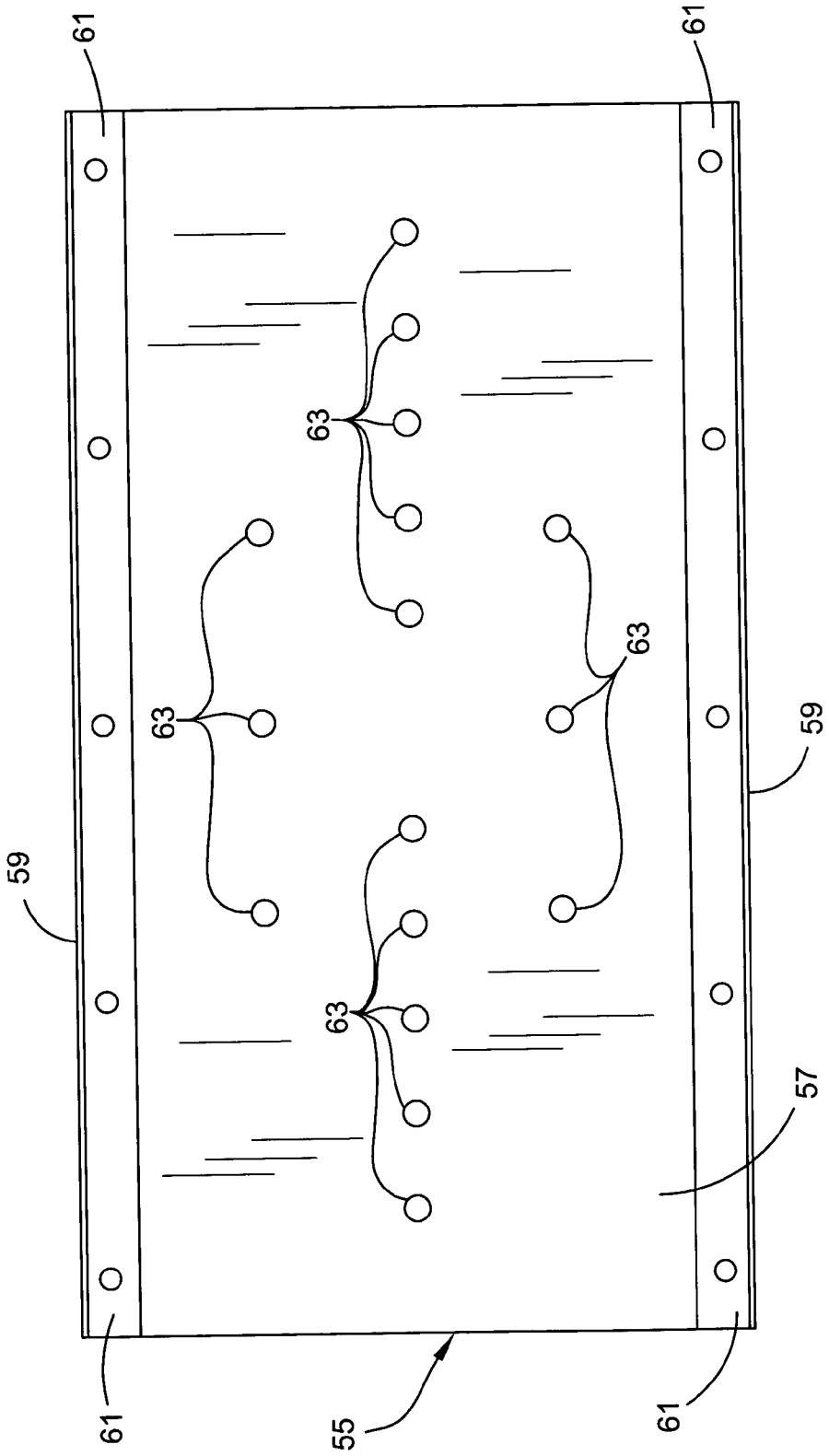

FIG. 4

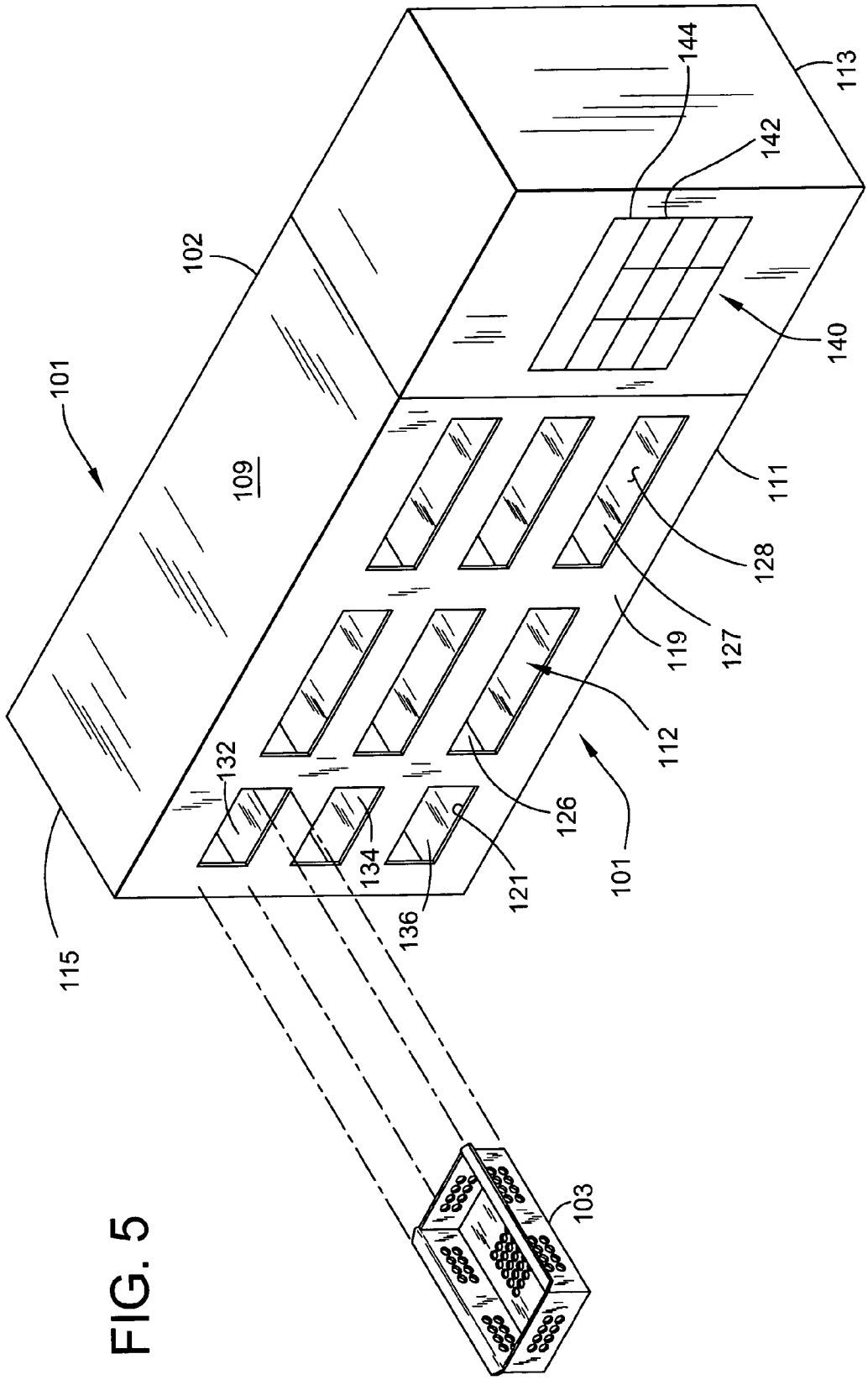
101
102
109
115
132
134
136
121
126
101
112
119
127
128
111
140
142
144
113
103

FIG. 5

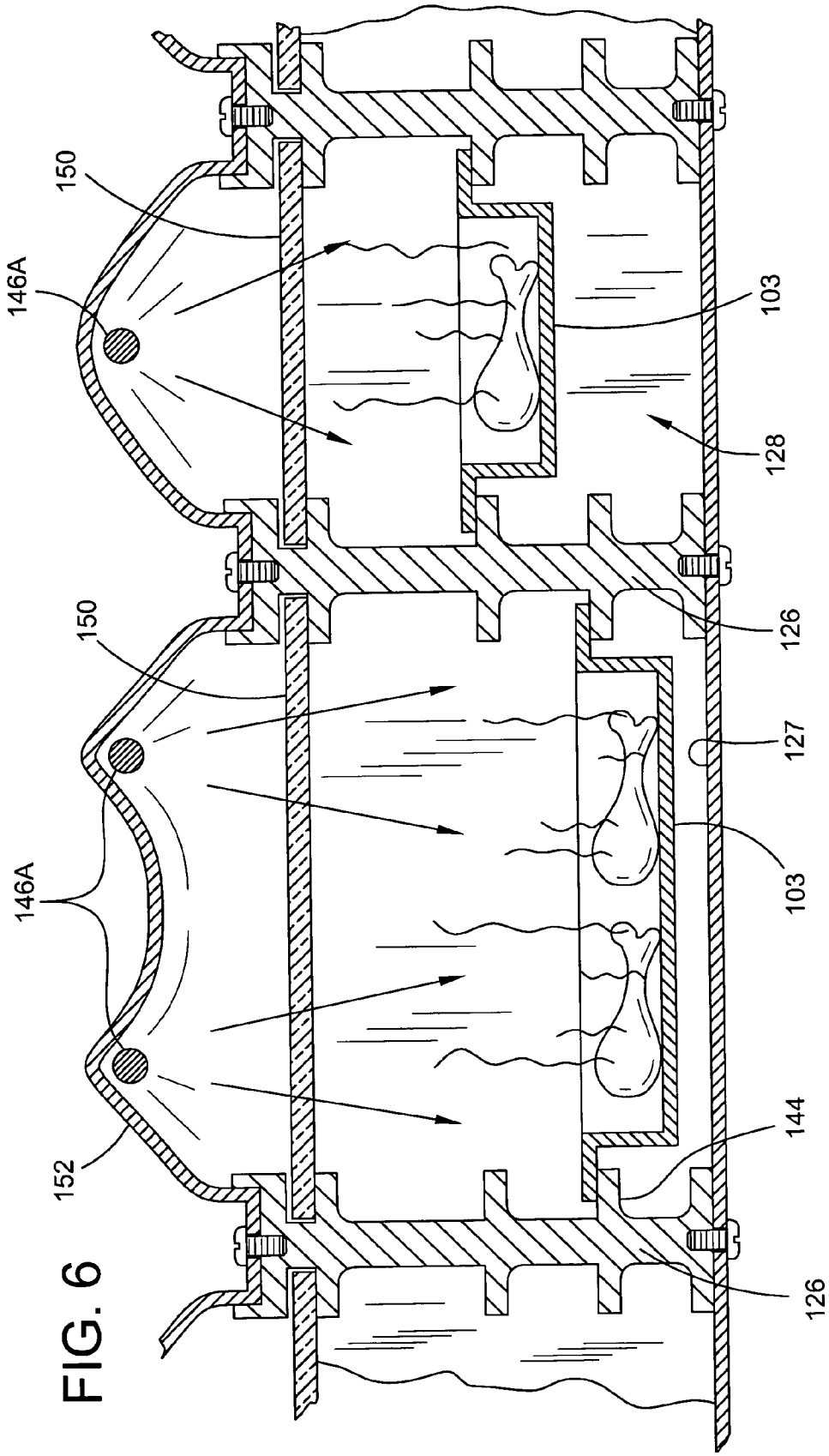

FIG. 6

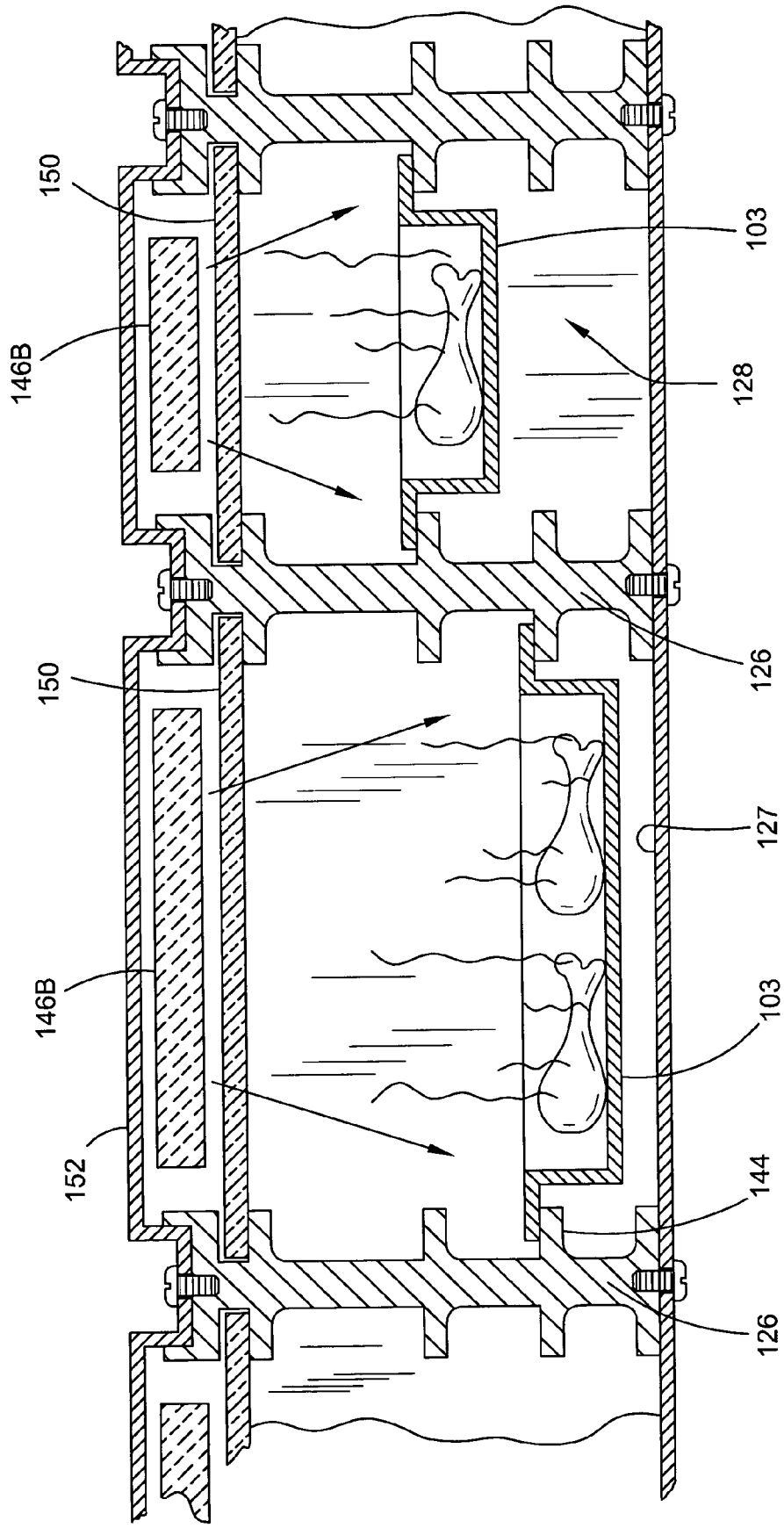

FIG. 7

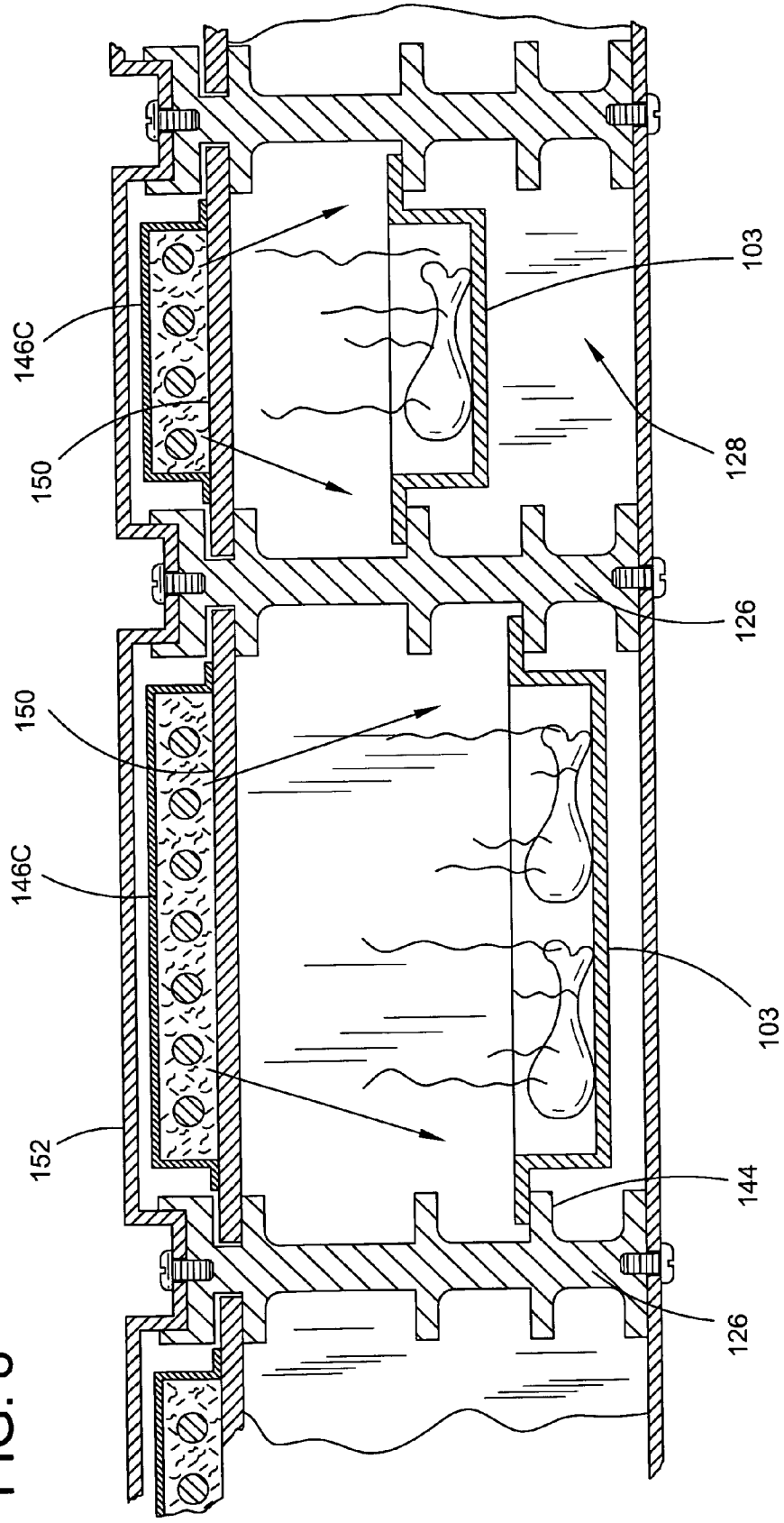

FIG. 8

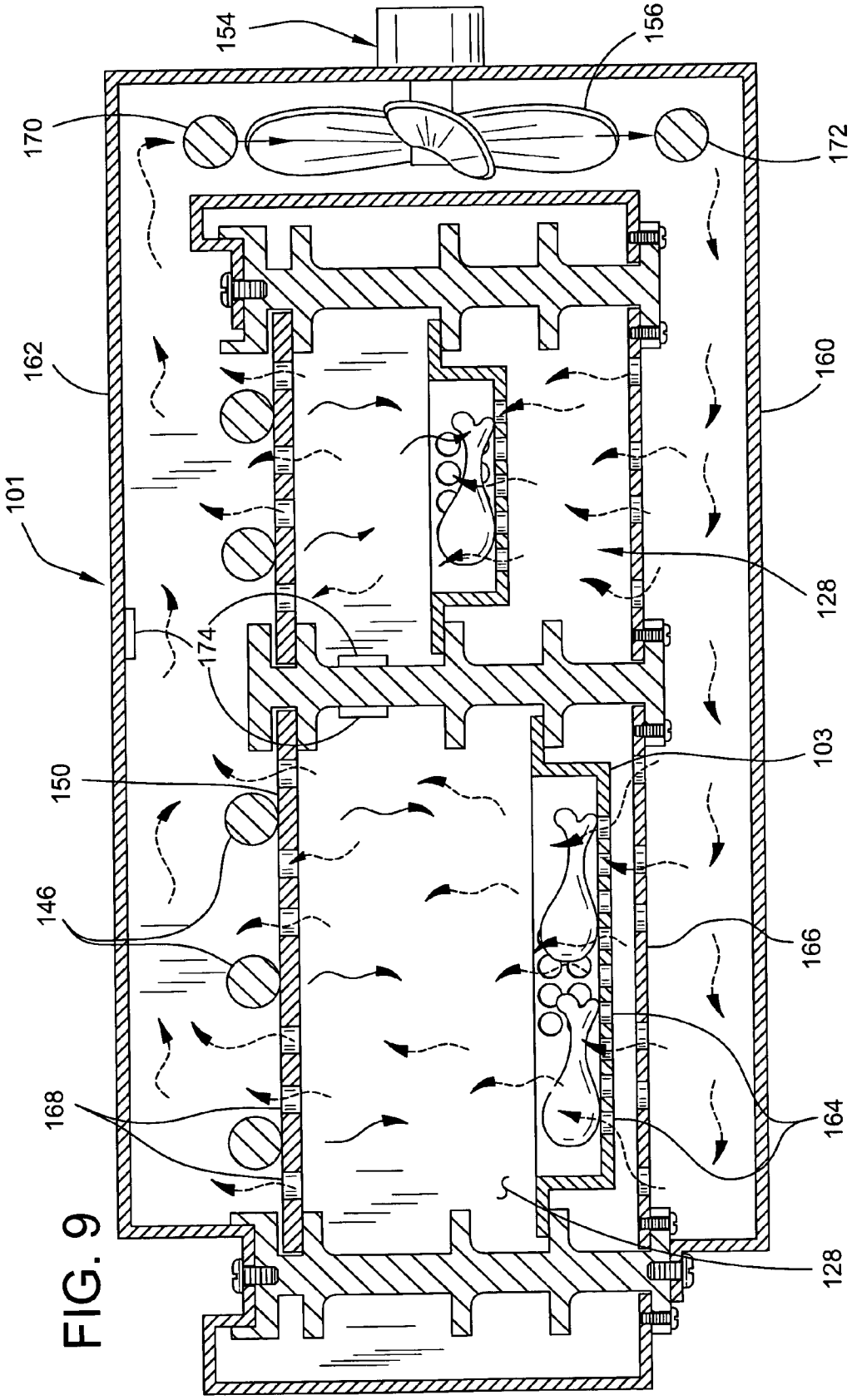

FIG. 9

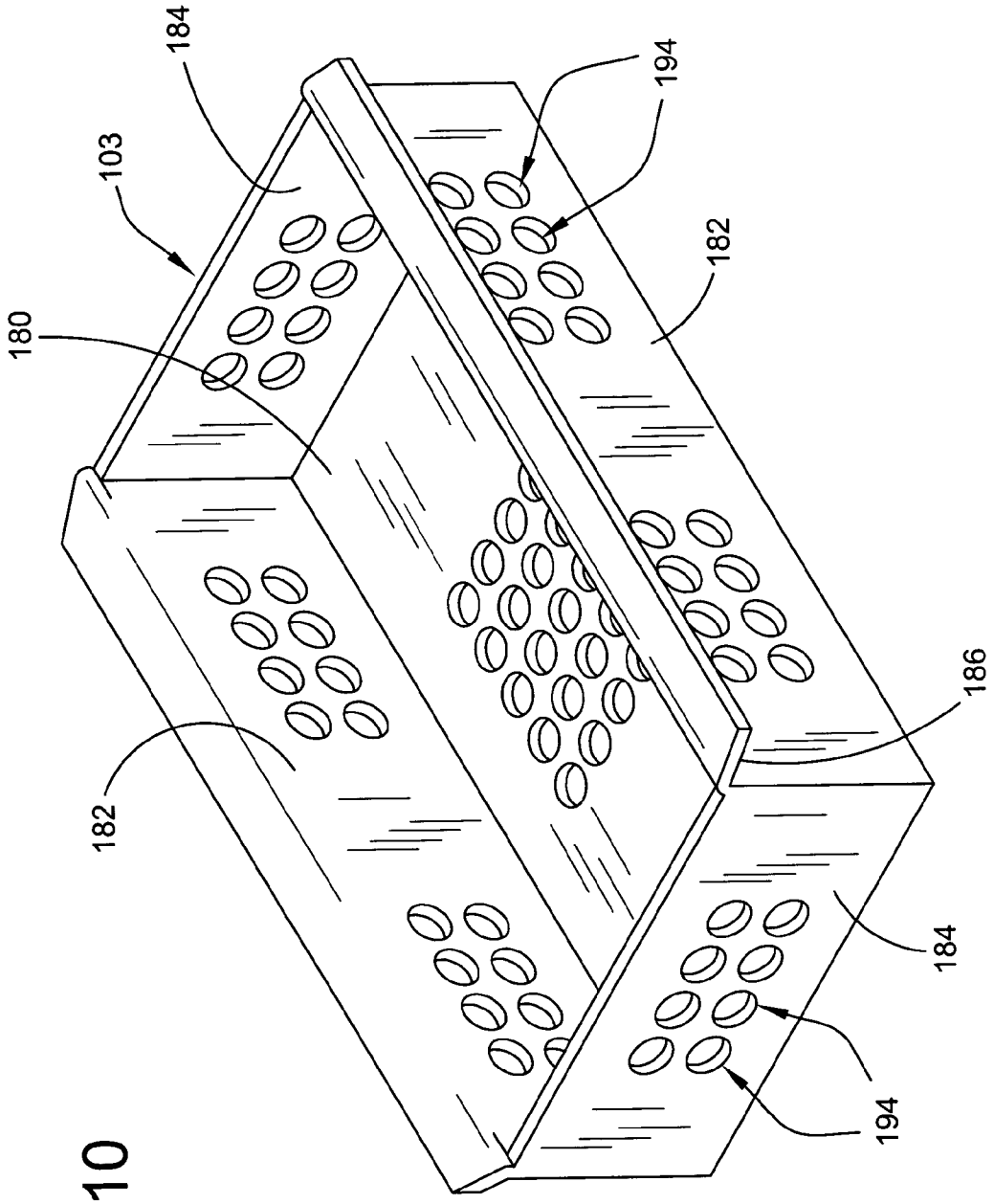

FIG. 10

FIG. 11

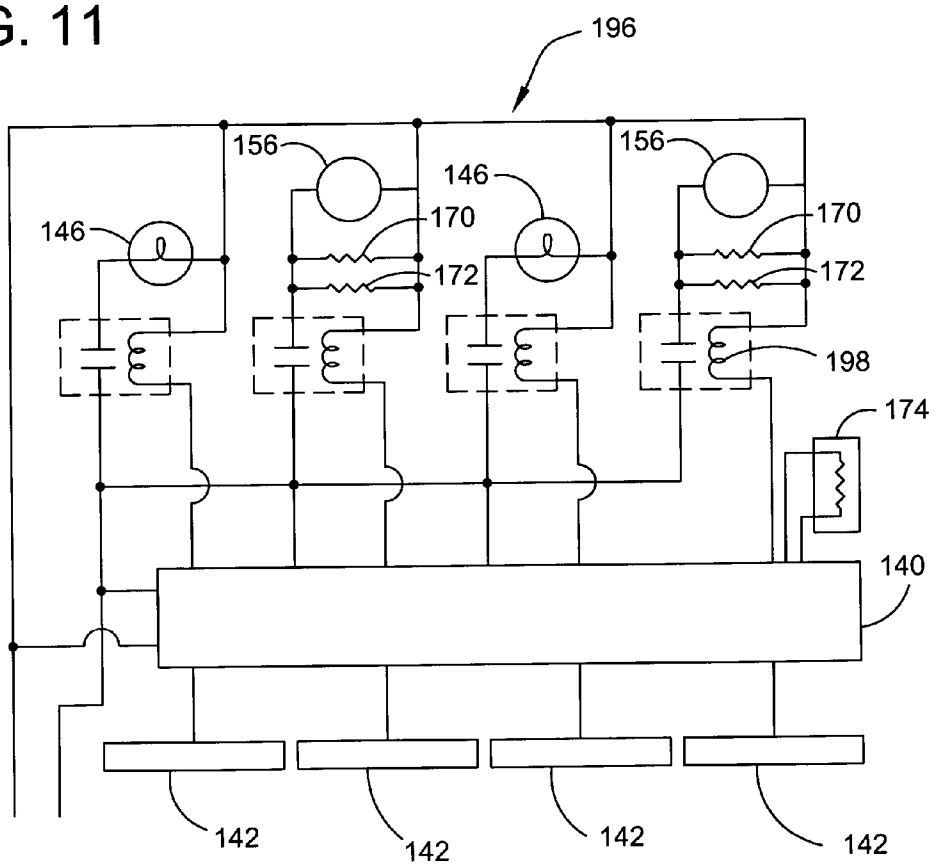

FIG. 12

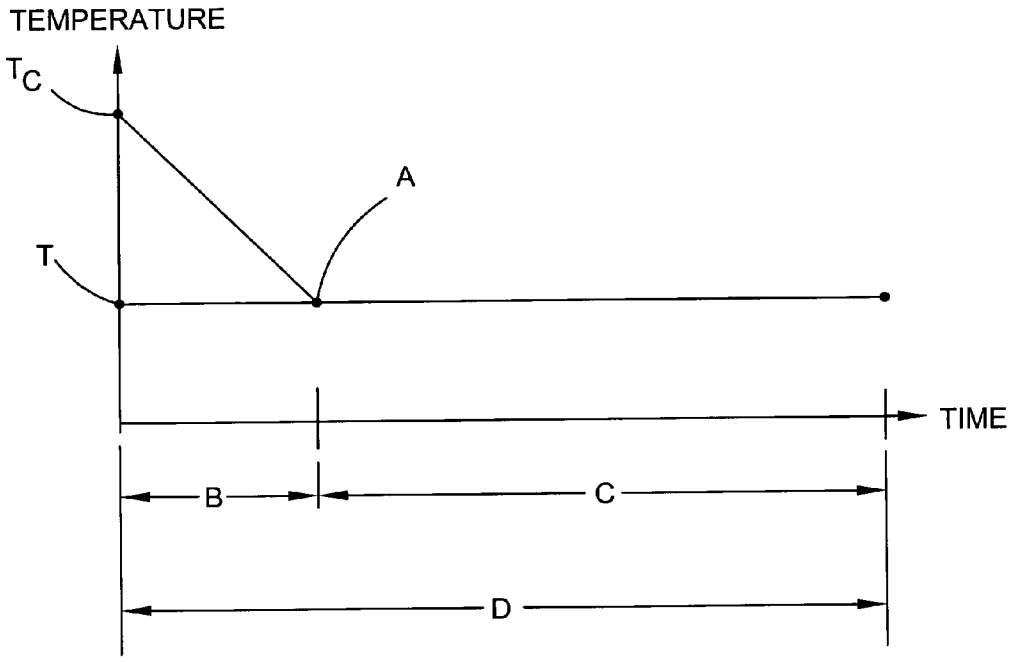

FIG. 13

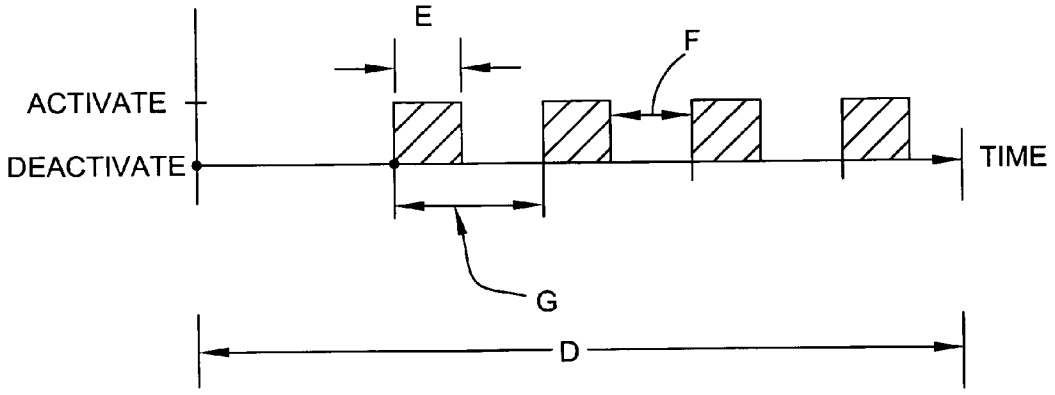

FIG. 14

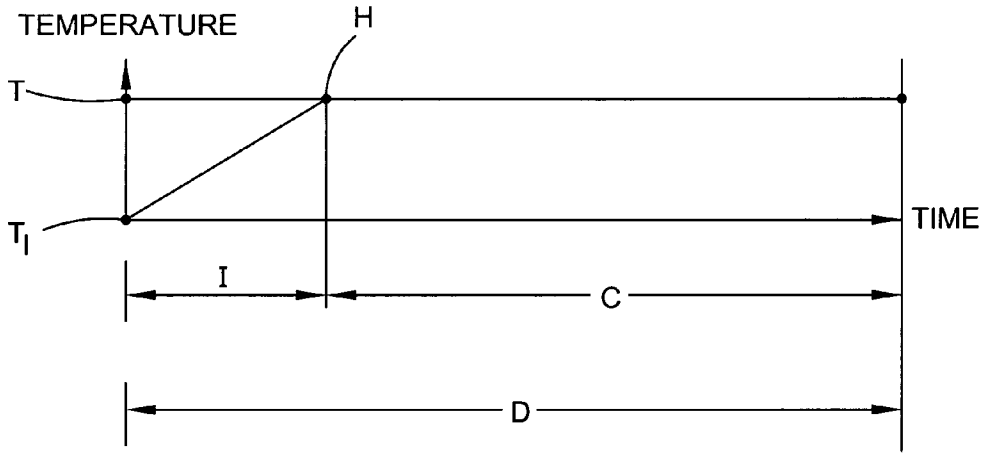
TEMPERATURE
H
T
T_I
TIME
I
C
D

FIG. 15

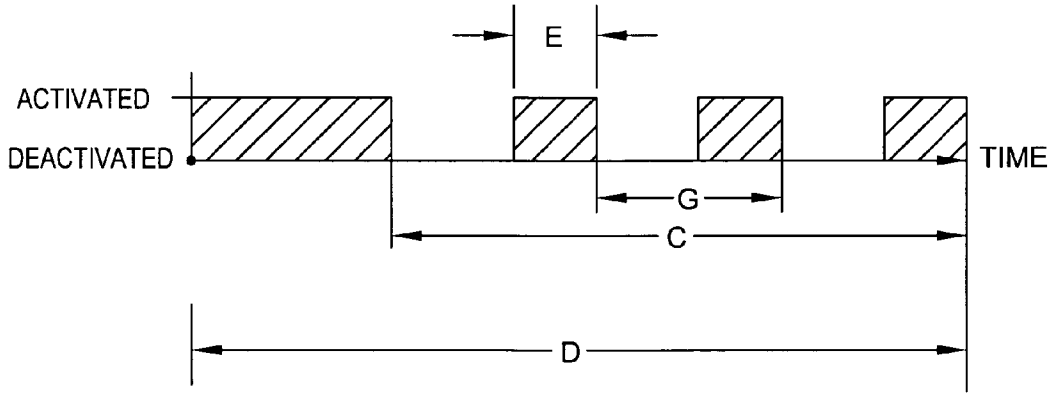
E
ACTIVATED
DEACTIVATED
TIME
G
C
D

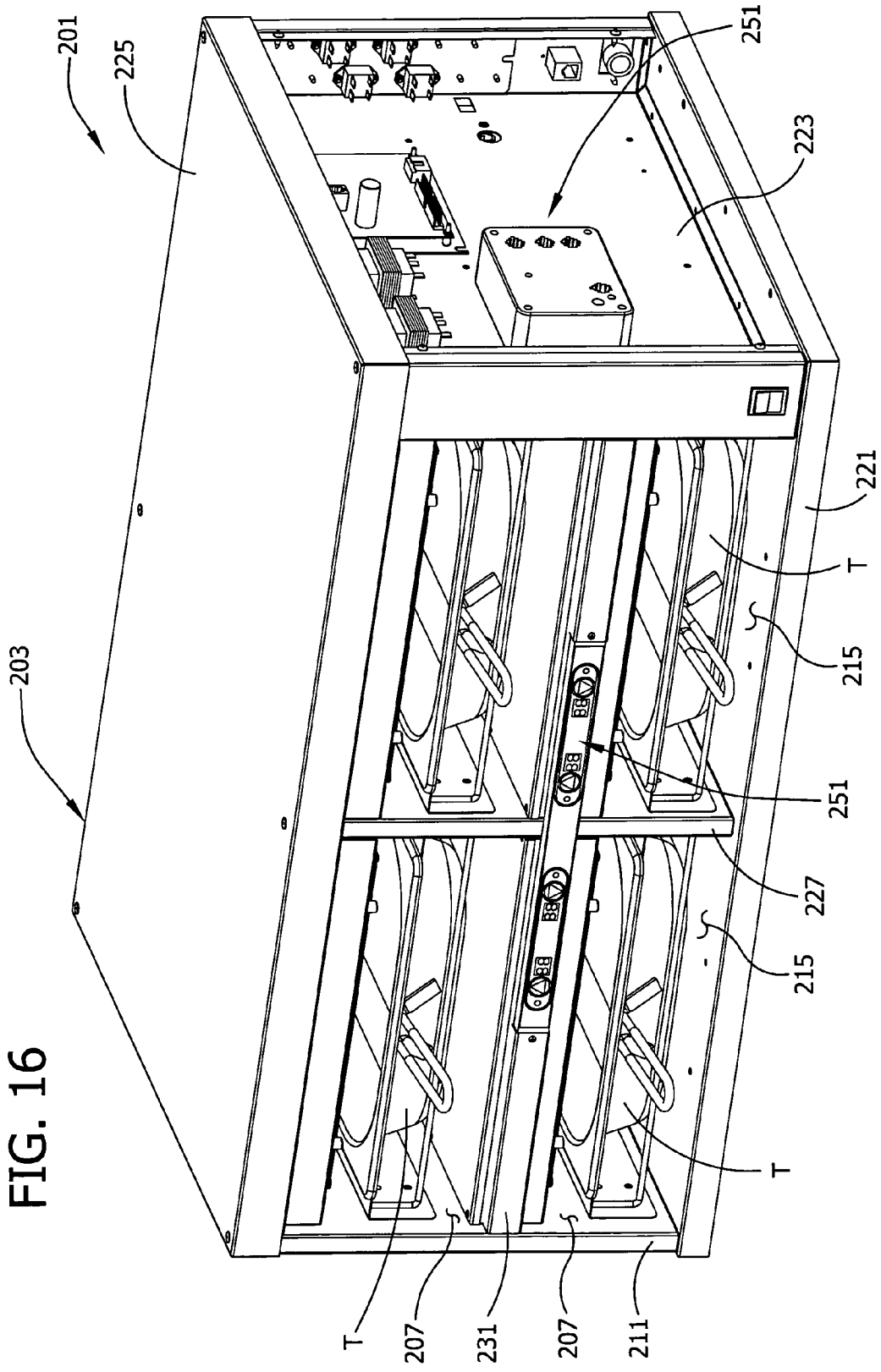

FIG. 16

FIG. 17

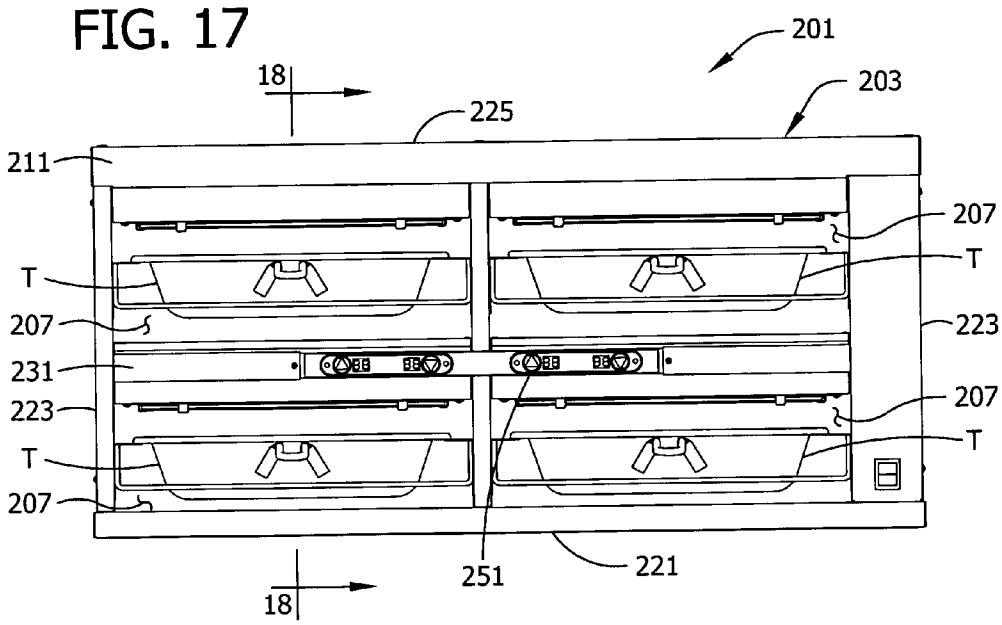
201
203
18
225
211
207
T
T
207
223
231
223
207
T
T
207
251
221
18

FIG. 18

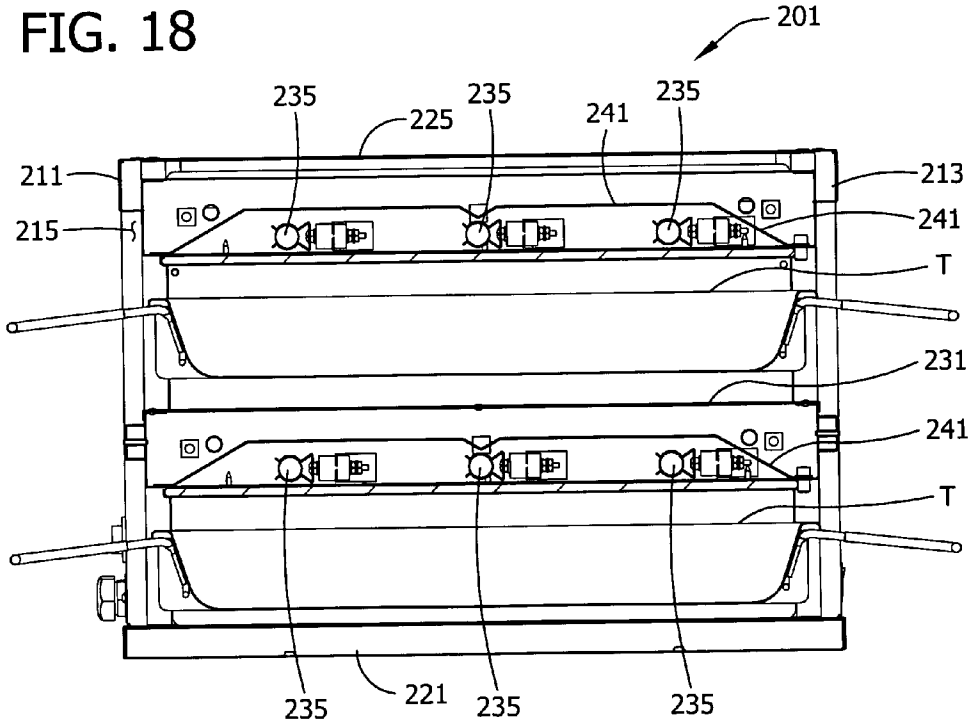
201
235
225
235
241
235
211
213
215
241
T
231
241
T
235
221
235
235

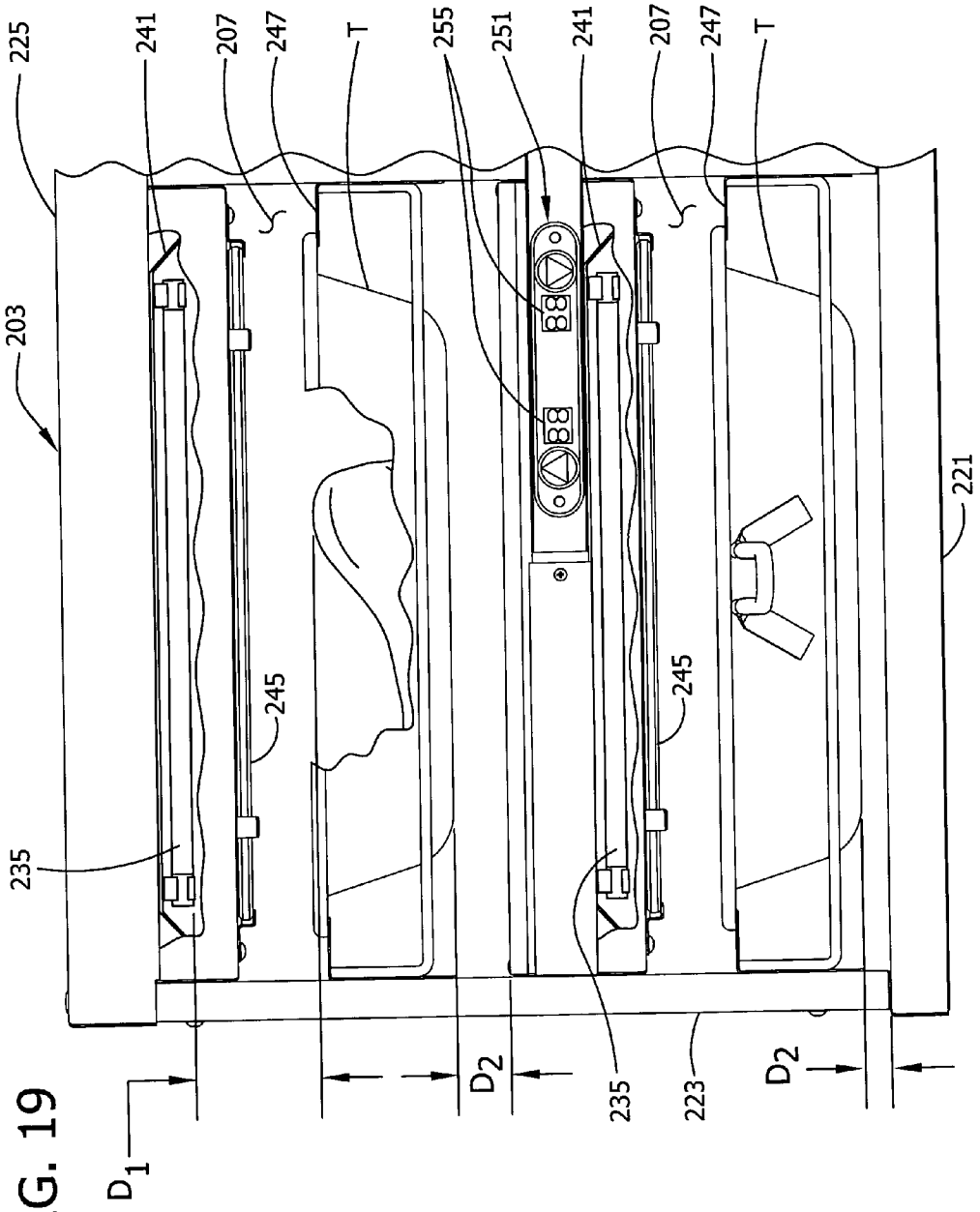
225
203
241
207
247
T
255
251
241
207
247
T
245
245
235
235
223
221
D_1
D_2
D_2

FIG. 19

FIG. 20

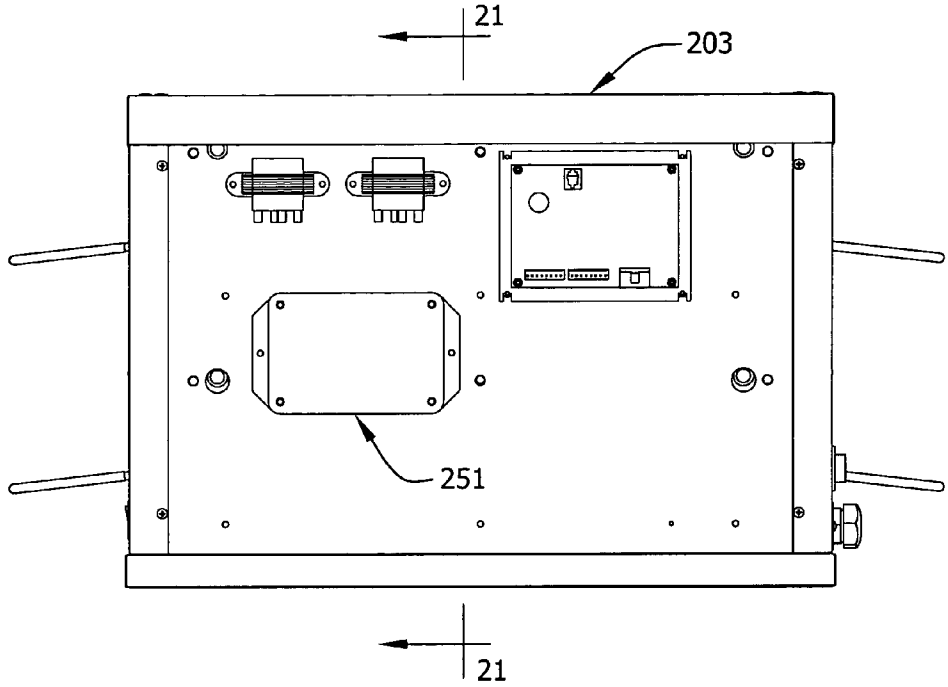
21
203
251
21

FIG. 21

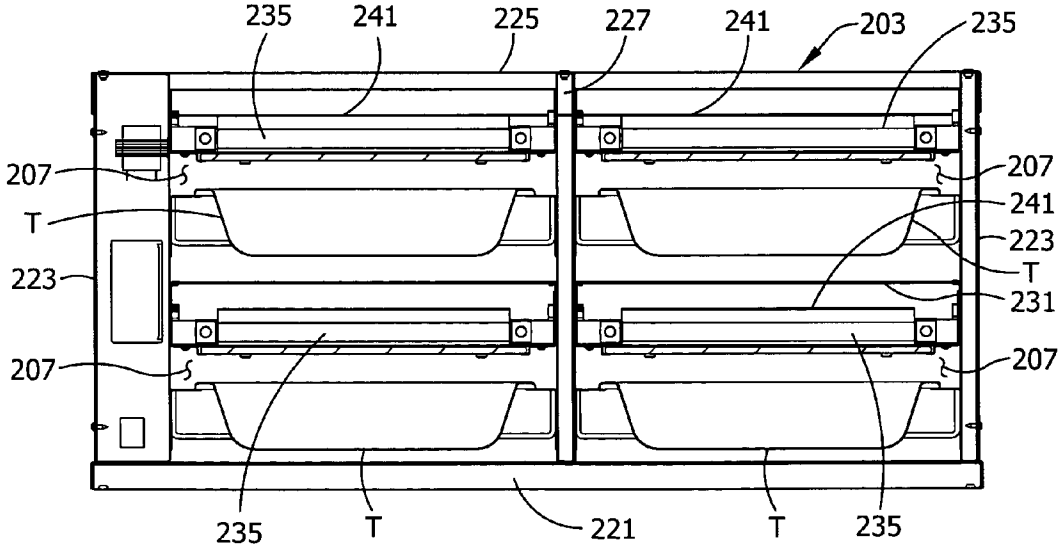
235
241
225
227
241
203
235
207
T
223
207
207
241
223
T
231
207
235
T
221
T
235

FIG. 22A

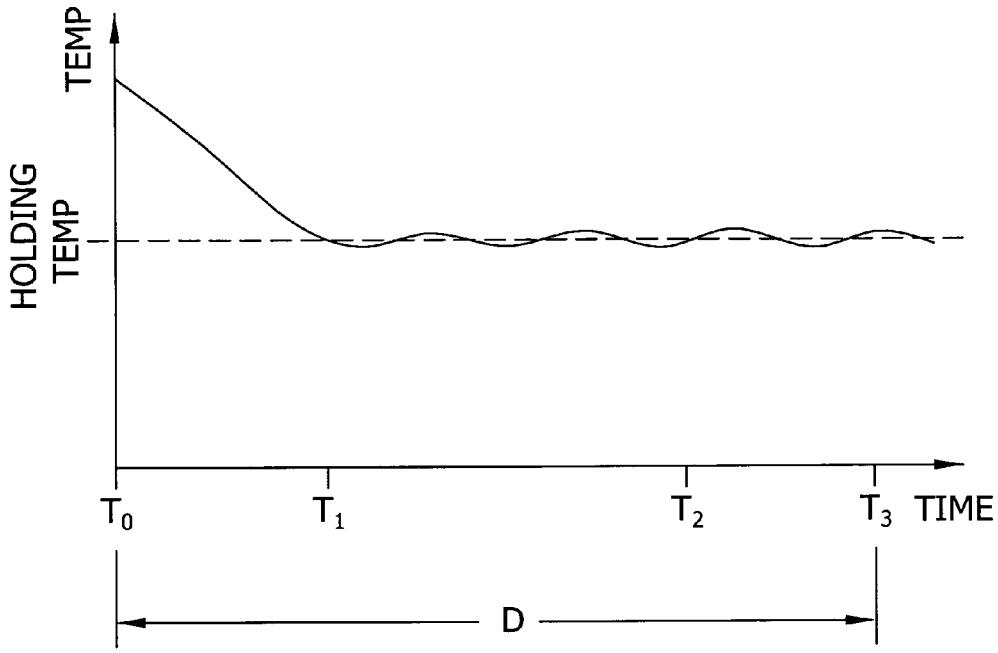

FIG. 22B

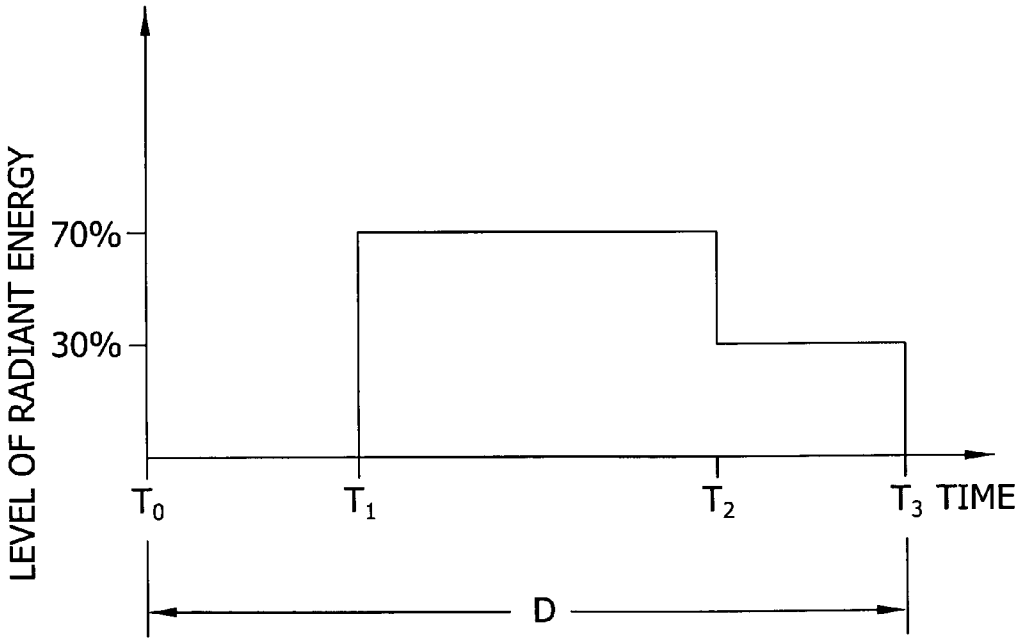

FIG. 23

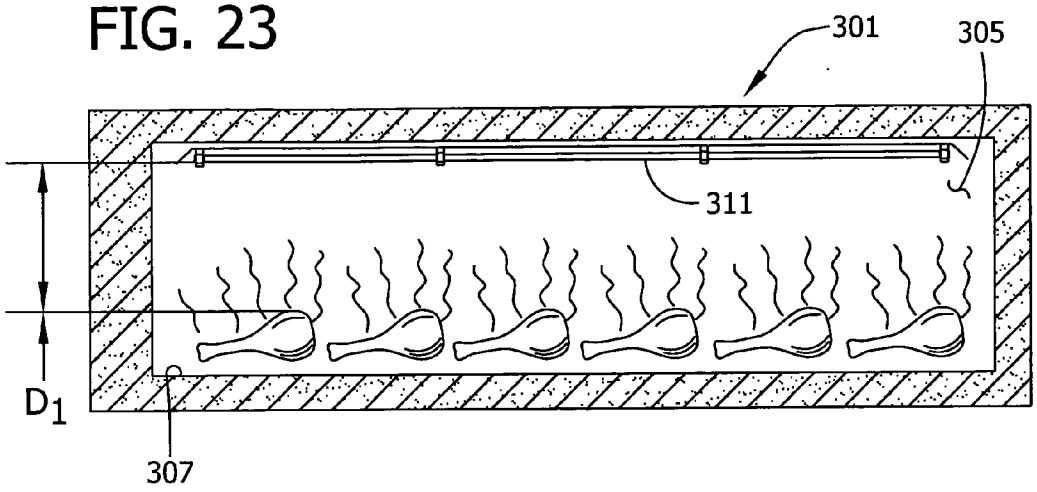

FIG. 24

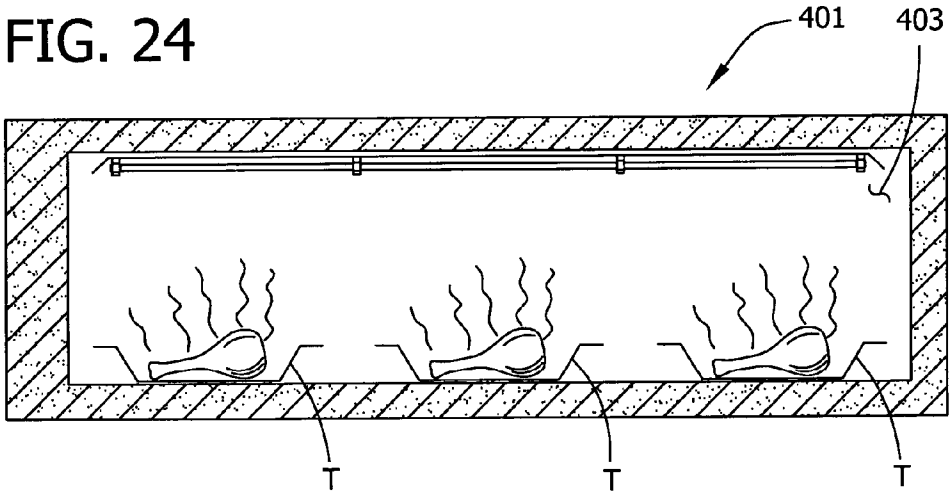

FIG. 25

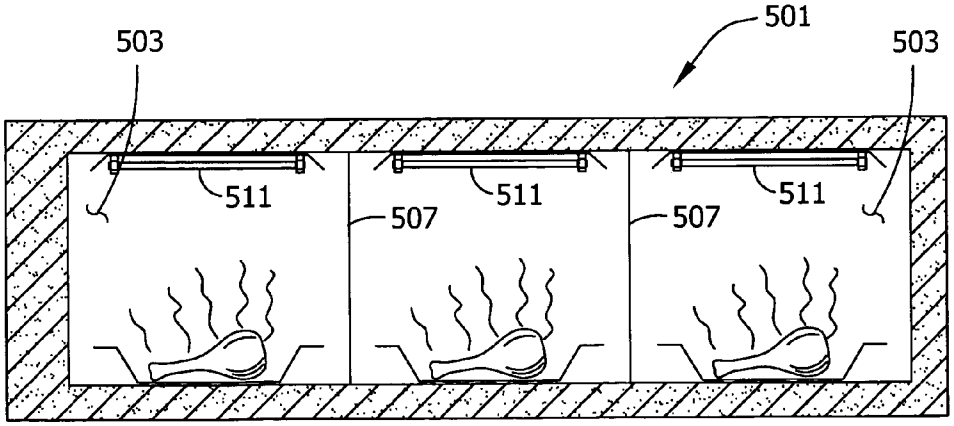

FOOD WARMING APPARATUS AND METHOD

CROSS REFERENCE TO RELATED APPLICATION

[0001] This application is a continuation-in-part of pending U.S. application Ser. No. 10/611,295, filed Jul. 1, 2003, which claims the benefit of U.S. Provisional Application No. 60/394,841, filed Jul. 10, 2002, titled HOLDING OR COOKING OVEN.

BACKGROUND OF THE INVENTION

[0002] This invention relates generally to food service equipment and more particularly to equipment for maintaining foods at temperatures suitable for serving food.

[0003] In one embodiment, this invention is especially (but not exclusively) directed to food service equipment that uses infrared (IR) heaters to maintain pre-cooked food at proper temperatures before serving. This type of equipment is referred to using such terms as holding oven, holding unit, and food warmer, and these terms are used interchangeably hereinafter. Such equipment is often used in, for example, the fast food service industry to heat food. However, such equipment has certain disadvantages. For example, short holding times (e.g., twenty minutes or less) and rapid product quality degradation often limit the effectiveness of this technology for holding applications. Additionally, different food products require different amounts of IR energy to be held in optimum condition. The quality of the food being held is affected in large part by the temperature and the air flow in the holding oven. As the food loses moisture due to evaporation, flavor is lost. This affects the texture and taste of the product. For example, chicken meat fibers will dry out and become tough, while the breading will become dry and greasy. French fries will develop a dry, rubbery texture as moisture is lost and the outer skin loses its crispness.

[0004] Conventional IR holding devices are not adjustable to control the amount of IR energy delivered to the food being heated. Rather, the heat source is on full power all of the time, and the food is placed relatively far from the heat source to prevent overheating. As a result, the typical prior holding device requires a large amount of vertical space. This can present a problem in a situation where space is at a premium, as in a fast-food restaurant.

[0005] U.S. Pat. Nos. 6,175,099, 6,262,394 and 6,541,739, assigned to Duke Manufacturing Co. of St. Louis, Mo. and incorporated herein by reference, are directed to a holding or cooking oven which is an improvement over prior designs and which has proven to be successful with various fried products. However, there is still a need for a technology that extends the holding time and quality of food products, especially fried products such as hash browns, French fries, rotisserie chicken, deep-fried chicken and shrimp.

SUMMARY OF THE INVENTION

[0006] Among the several objects of this invention will be noted the provision of food service equipment, e.g., a food warmer, which is adapted for holding pre-cooked food longer without degradation of the quality of the product, including products having a crust which tends to become soggy or rubbery, such as fried potato products, fried chicken, and rotisserie chicken; the provision of such equipment which is more compact than conventional food warming equipment, thus requiring less space; the provision of such an oven which allows evaporative losses to be more closely controlled to enhance food quality; and a method of maintaining previously cooked food in an environment where the quality of the food is maintained at a high level for a longer period of time.

[0007] In general, one embodiment of the invention is directed to food holding apparatus for holding pre-cooked food at a selected holding temperature. The apparatus comprises a cabinet having at least one holding compartment therein, and pre-cooked food in the holding compartment, the food having been previously cooked in a cooking appliance. At least one radiant heat source is spaced above the food a distance less than 12 inches for delivering radiant heat to the food. A control mechanism varies the amount of radiant heat delivered by the heat source to the food to maintain the food at the selected holding temperature.

[0008] The present invention is also directed to a method of preserving cooked food. The method comprises the steps of cooking food in a cooking appliance to provide pre-cooked food, placing the pre-cooked food in a holding compartment of food warming apparatus for a duration of holding time, and heating the pre-cooked food in the holding compartment for at least a portion of said duration of holding time by delivering radiant heat to the food. The heating step comprises varying the amount of radiant heat delivered to the pre-cooked food to maintain the food at a selected holding temperature.

[0009] Other objects and features will be in part apparent and in part pointed out hereinafter.

BRIEF DESCRIPTION OF THE DRAWINGS

[0010] **FIG. 1** is a front elevation of an oven of the present invention equipped with heat sinks for receiving food-containing trays, auxiliary heat sources mounted above the heat sinks, and metallic covers for covering the trays (the trays being omitted from the view);

[0011] **FIG. 2** is an enlarged sectional view of a portion of **FIG. 1** but showing a tray positioned in a respective heat sink below its cover;

[0012] **FIG. 3** is a perspective showing a heat sink, cover and auxiliary heat source;

[0013] **FIG. 4** is a plan of a cover per se;

[0014] **FIG. 5** is a front perspective view of another embodiment of an oven of the present invention equipped with compartments for receiving food-containing trays;

[0015] **FIG. 6** is a sectional view of a portion of the oven of **FIG. 5** showing trays positioned in respective compartments below heat sources;

[0016] **FIG. 7** is a sectional view of a portion of the oven similar to **FIG. 6** showing trays positioned in respective compartments below alternate heat sources;

[0017] **FIG. 8** is a sectional view of a portion of the oven similar to **FIG. 6** showing trays positioned in respective compartments below alternate heat sources;

[0018] **FIG. 9** is a sectional view of a portion of the oven of **FIG. 5** showing a ventilation system of the oven according to an embodiment of the invention;

[0019] **FIG. 10** is a perspective view of one embodiment of a tray used with the oven of **FIG. 5**;

[0020] **FIG. 11** is a schematic diagram of one embodiment of a control circuit of the oven of **FIG. 5**;

[0021] **FIG. 12** is a diagram of a time vs. temperature curve illustrating one mode of operation of the oven of **FIG. 5**;

[0022] **FIG. 13** is a time vs. heat source activation curve for the mode of operation depicted in **FIG. 12**;

[0023] **FIG. 14** is a diagram of a time vs. temperature curve illustrating a different mode of operation of the oven of **FIG. 5**;

[0024] **FIG. 15** is a time vs. heat source activation curve for the mode of operation depicted in **FIG. 14**;

[0025] **FIG. 16** is a perspective of a different embodiment of a holding oven of this invention;

[0026] **FIG. 17** is a front elevation of the holding oven of **FIG. 16**;

[0027] **FIG. 18** is a section on line **18-18** of **FIG. 17**;

[0028] **FIG. 19** is an enlarged portion of **FIG. 17** with parts broken away to show the distance D1 between the food in the oven and a heat source of the oven;

[0029] **FIG. 20** is a right-side elevation of the holding oven of **FIG. 16**;

[0030] **FIG. 21** is a section on line **21-21** of **FIG. 20**;

[0031] **FIG. 22A** is a graph of a time v. holding temperature curve during an embodiment of a holding duration;

[0032] **FIG. 22B** is a graph of time v. radiant energy curve during the embodiment of **FIG. 22A**;

[0033] **FIG. 23** is a schematic view of a holding oven of another embodiment;

[0034] **FIG. 24** is a schematic view of a holding oven of still another embodiment; and

[0035] **FIG. 25** is a schematic view of a holding oven of yet another embodiment.

[0036] Corresponding parts are designated by corresponding reference numbers throughout the drawings.

DETAILED DESCRIPTION OF THE PREFERRED EMBODIMENT

[0037] **FIG. 1** illustrates one embodiment of a holding oven of the present invention, generally designated **1**, comprising a cabinet having an interior **12** comprising a plurality of tiers for removably receiving a plurality of trays, each generally designated **3**, the trays in each tier being disposed side-by-side. As shown, the oven has two tiers, an upper tier **5** and a lower tier **7**, each accommodating three trays. It is to be understood that the number of tiers and the number of trays in each tier may vary.

[0038] The holding oven **1** has a top **9**, bottom **11**, sides **13** and **15**, and a shelf **17** extending from one side to the other generally midway of the top and bottom. The shelf **17** and top **9** define the upper tier **5**; the bottom **11** and shelf **17** define the lower tier **7**. The oven has a front panel **19** and a corresponding rear panel (not shown) each having openings such as indicated at **21** for sliding each tray **3** either into or out of its respective tier front or rear.

[0039] In one embodiment, each tray **3** is generally rectangular in plan, having a bottom **23**, opposite side walls each designated **25**, and end walls each designated **27**. Each tray is disposed in its respective tier **5**, **7** in the oven **1** in a heat sink generally designated **29** extending from front to rear in the respective tier, being slidably disposed in its heat sink for being slidably withdrawn from or entered in the heat sink either front or rear through the respective opening **21**. Each heat sink **29**, which is made of aluminum, for example, has a bottom **31** and side walls each designated **33** (**FIG. 2**). The side walls **33** have outwardly (laterally) extending flanges **35** and rims **37** extending up from the outer margins of the flanges. Each heat sink constitutes a tray-receiving member for holding a single tray. An electrical resistance heating element generally designated **39** having a bottom component **41** contacting the bottom of the heat sink and upwardly extending side components **43** contacting the sides of each heat sink is provided for heating the heat sink and the tray **3** therein. Each heat sink **29** and associated heating element **39** constitutes the primary heating source for heating the respective tray **3** and its food content. At **45** is indicated an on-off electrical power control for all the heating elements **34**. At **47**, are indicated temperature controls for the heating elements **39** in the upper and lower tiers. The bottom component **41** of each heating element **39** in the upper tier **5** seats on shelf **17**, the bottom component **41** of each heating element **39** in the lower tier **7** seats on the bottom **11** of the holding holding oven **1**. The sides **43** of each heating element extend up to the flanges **35** of the respective heat sink **29**. Reference may be made to U.S. Pat. Nos. 6,175,099, 6,262,394 and 6,541,739, incorporated herein by reference, assigned to Duke Manufacturing Co. of St. Louis, Mo., for further details relating to the construction of the heat sink **29** and associated equipment.

[0040] Primary heating sources other than the heat sinks **29** and associated heating elements **39** can be used without departing from the scope of this invention.

[0041] In the preferred embodiment, each tray **3** has a rim **49** having an outwardly (laterally) directed upper part **51** with a downwardly extending angled lip **53** in sliding sealing engagement with the respective heat sink flange **35**. The rim defines the open top **32** of the tray **3**. A cover generally designated **55** is provided for the open top of each tray, each cover having a metallic portion **57** overlying the top of the respective tray. More specifically, the metallic portion **57** of each cover comprises a generally horizontal cross wall comprising a rectangular plate of anodized aluminum sheet, for example, having downturned flanges such as indicated at **59** at each side thereof and anodized metal angles **61** extending the length thereof on each side margin. The lower edges of the downturned flanges **59** engage the top of the heat sink flanges **35**. One or more of the covers **55** is/are spaced above the rims **49** of respective trays **3** at a distance no greater than one inch, more preferably no greater than about 0.40 inch, and still more preferably no greater than about 0.30 in. One or more openings such as indicated at **63** is/are provided in at least one of the covers **55** for

venting moisture from each tray having such an opening or openings. **FIG. 4** shows a cover having sixteen openings **63** arranged in a pattern such as illustrated. The number and pattern may vary widely; the area of the one opening in a cover having one opening and the combined area of the openings in a cover having more than one opening is preferably less than about 25% of the area of the open top of the tray **3** it is covering, more preferably less than about 5% and even more preferably less than 1% thereof. The combined areas of the openings and the specific pattern of openings in a cover will vary depending on the type and quantity of food in the tray being covered. Whatever the circumstances, the size and pattern of the opening(s) can be selected to closely control the amount of moisture vented from the tray and thus optimize the conditions for maintaining food quality over an extended period of time.

[**0042**] Each cover **55** is part of a system generally designated **65** for heating the food in the respective tray in addition to the primary heat source, e.g., the respective heat sink **29** and heating element **39**. This auxiliary heating system **65** comprises a heat source **67** for heating the metallic portion **57** of the respective cover **55** whereby the metallic portion is adapted to emit radiant heat to the food in the respective tray for additional warming of the food in the tray **3**. Each heat source **67**, which is located over the respective cover **55**, comprises one electric heating element **69** or more disposed in a sheet metal housing **71** affixed to an interior surface of the oven or cabinet **1**. In particular the heating element **69** is a commercial item, viz., a Chromalox electrical resistance heater element sold by Carlton Company of St. Louis, Mo. The housing **71** comprises a shallow pan of sheet metal such as aluminum having a rectangular bottom **73**, sides **75**, ends such as indicated at **77** and flanges **79** extending out from the top of the sides.

[**0043**] In one embodiment, the heating element **69** lies on the bottom **73** of the pan extending lengthwise thereof. It is suitably connected in an electrical circuit such that it is adapted to heat the respective cover **55** by heating the bottom **73** of the pan **71** with attendant emission of heat from the bottom of the pan to the cover. Terminals of the heating element for connection thereof in the aforesaid circuit are indicated at **81** and **83**. The pans **71** are affixed in the oven or cabinet with the bottom **73** of each pan **71** spaced above the respective cover **55** a distance less than 2.0 inches and more particularly less than about 1.0 inch. In one embodiment, the power delivered by each heat source **67** to the respective cover **55** ranges from 100-500 watts, for example, and each heat source **67** is operable to heat each cover **55** to a temperature which preferably ranges from 200° to 500° F. Pivoted locks for locking the covers **55** in the oven **1** are indicated at **85**.

[**0044**] **FIG. 5** illustrates a second embodiment of a holding oven of this invention, generally designated **101**, comprising a generally rectangular or box-shaped cabinet **102**. The cabinet **102** has a top **109**, a bottom **111**, opposite sides **113** and **115**, a front panel **119** and a corresponding rear panel (not shown). The cabinet **102** defines an interior, generally designated **112**, for removably receiving a plurality of trays, each generally designated **103**. The holding oven **101** has vertical partitions **126** and horizontal partitions **127** within the cabinet **102** dividing the interior **112** thereof into a plurality of separate, thermally isolated holding compartments **128**. It is to be understood that the number of vertical and horizontal partitions **126** and **127** (and thus the number of compartments **128**) may vary. Preferably, the partitions **126** and **127** prevent the transfer of food flavors between the compartments **128**.

[**0045**] The front panel **119** and rear panel contain openings, such as indicated at **121**, in communication with each compartment **128**. In one embodiment, the openings **121** in the front panel **119** have corresponding openings (not shown) formed in the rear panel such that each compartment **128** extends from front to rear of the oven **101** and is adapted for removably receiving one of the trays **103** from either the front or the back of the holding oven **101**. The openings **121** are sized for sliding each tray **103** either into or out of the compartment **128**.

[**0046**] Preferably, the compartments **128** and corresponding openings **121** are arranged in several tiers of compartments. As shown in **FIG. 5**, the holding oven has three horizontal tiers, an upper tier **132**, a middle tier **134** and a lower tier **136**. Each tier includes three compartments **128**, with each compartment accommodating an individual tray **103**. It is to be understood, however, that the number of tiers and the number of compartments in each tier may vary. In some embodiments, for example, it may be desirable to configure the holding oven **101** to have a single tier having two, three, or more compartments **128**. Preferably, the entire cabinet **102** is fabricated of sheet metal material and a least the top **109**, the bottom **111** and the sides **113** and **115** are of a dual wall construction to insulate the interior **112**.

[**0047**] The holding oven **101** includes a control mechanism, generally indicated at **140**, for controlling operation of the oven **101**. Preferably, the control mechanism **140** has an operator input device, which in one embodiment, comprises a keypad, indicated by reference **142**, and a display, indicated by reference **144**, to selectively allow the operator to interact with the control mechanism to control the environment, such as the temperature and/or air flow, in each compartment **128**. The control mechanism may include a separate keypad for each compartment **128**. Alternately, the operator input device can include dials, switches and the like known to those in the art. For example, rotatably mounted control dials mounted on the front panel **119** and movable in a push-and-turn fashion to any user-selected positions can permit operator input to the control mechanism **140**. The control mechanism **140** may also include associated indicator lights (not shown) to inform an operator of the status of a particular compartment **128** or the food within the compartment, such as whether the temperature in the compartment is at a desired temperature or whether the food in the compartment is approaching or has exceeded the desired hold time. Further operation of the control mechanism **140** will be described below.

[**0048**] Referring to FIGS. **6-8**, each compartment **128** has tray supports comprising, in one embodiment, inwardly (laterally) extending flanges **144** extending from the vertical partitions **126** at opposite sides of the compartment **128**. The flanges **144** are vertically spaced for supporting a tray **103** at different elevations in the compartment **128**. In one embodiment, the compartments **128** in the holding oven **101** have different widths and/or heights to accommodate trays of different sizes. It is contemplated that the tray supports can have other forms, such as grooves or slots in the vertical partitions **126**.

[0049] Heat sources **146** positioned above respective compartments **128** are adapted to emit radiant heat into the compartments directed at the trays **103** to warm food contained therein. Each heat source **146** can function as the primary heating source for heating the respective tray **103** and cooking its food content or maintaining an already cooked food near a selected temperature. In the embodiment shown in **FIG. 6**, the heat source (designated **146**A) is a quartz infrared heat source, but it will be understood that other heat sources may be used. For example, **FIG. 7** illustrates ceramic infrared heat sources **146**B and **FIG. 8** illustrates resistance heating elements embedded in magnesium oxide **146**C. Alternatively, halogen infrared heat sources or other sources may be used. The power delivered by each heat source **146** ranges from between about 20 and 2,000 watts, desirably between about 25 and 1500 watts, preferably between about 30 and 1000 watts, more preferably between about 35 and 750 watts and even more preferably between about 40 and 600 watts. In one embodiment, each heat source **146** delivers about 400 watts of power. Additional means for heating the holding oven **101** other than heat sources **146** can be used without departing from the scope of this invention. Reference may be made to the aforementioned U.S. Pat. Nos. 6,175,099, 6,262,394 and 6,541,739, for further details relating to the construction of certain types of equipment used for heating the trays **103** and food contained therein.

[0050] In one embodiment, a panel **150** is positioned between each heat source **146** and its respective compartment **128** to prevent the trays **103** and their contents from contacting the heat sources. In one embodiment, the panel **150** is a tempered glass cover that permits radiant energy produced by the heat source **146** to pass through into the compartment **128**. In this embodiment, the panel is preferably made from transparent or semi-transparent glass. Alternately, the panel **150** can be a radiant metallic plate. In this latter embodiment, the heat source **146** is used to heat the panel **150**, and the panel then radiates heat to warm the contents of the tray **103**. A reflector **152** is positioned above the heat source **146** to radiate heat down toward the tray **103** below it.

[0051] **FIG. 9** illustrates an embodiment of the holding oven **101** having a forced air mechanism, indicated generally at **154**, for delivering recirculating air into the compartments **128**. The mechanism **154** comprises lower air ducting **160**, upper air ducting **162**, and a fan system **156** that moves air through the lower and upper air ducting air ducting. In one mode of operation, the fan system **156** circulates air in one direction along a flow path through the lower air ducting **160**, into the compartments **128** and then through the upper air ducting **162** and back to the fan system. The lower air ducting **160** conveys the forced air into the compartments **128** through openings **164** located in a floor **166** of the compartments **128** below the trays **103**. Air flows up from the compartments **128** into the upper air ducting **162** through one or more openings **168** in the panels **150** above the trays **103**. In a second mode of operation, the fan system **156** moves air in the opposite direction through the upper air ducting **162**, down into the compartments via openings **168**, into the lower ducting **160** via openings **164**, and then back to the fan system.

[0052] The number and pattern of openings **164**, **168** in the panels **150** and floor **166** may vary widely depending on the type of heat source **146** used in each compartment **128** and the type of food in the compartment. The size and/or speed of the fan system **156** and/or the number, pattern and/or size of the openings **164**, **168** associated with each compartment **128** can be varied to regulate the air flow around each tray **103** to provide optimum air flow for different food products. Additionally, the number, size and/or pattern of the opening(s) **164**, **168** can be selected to closely control the amount of moisture vented from each compartment **128** and thus optimize the conditions for maintaining food quality over an extended period of time.

[0053] An upper duct heat source **170** and a lower duct heat source **172** are positioned in the respective air ducting **162**,**160** for heating air flowing along the selected flow path. The upper and lower duct heat sources **170**, **172** heat the air that flows through the compartments so that, optionally, the food may also be warmed by convective heating. The duct heat sources **170**, **172** are commercially available items, e.g., Chromalox electrical resistance heater element sold by Carlton Company of St. Louis, Mo. The duct heat sources **170**, **172** may be used when additional heat is needed in the compartments **128**, such as when the initial temperature is low or a large quantity of food is placed in the compartments. In one embodiment, temperature sensors **174** (**FIG. 9**), such as conventional resistive thermal detector type sensors known to those skilled in the art, may be positioned in each of the compartments **128** or in the air ducting **162**, **160**. The temperature sensors **174** provide feedback to the control mechanism **140**, for example, to supply an indication of the temperature to the display **144**, to control the operation of the fan system **156**, or to provide indications to a warning system (not shown) that the temperature has exceeded a selected threshold. The forced air mechanism **154** can also provide recirculating air for forced cooling of the food stored in the compartment **128**. **FIG. 9** illustrates a holding oven with a single tier and a single forced air mechanism **154**, but holding ovens **101** with multiple tiers can have separate fan systems with associated air ducting **160**, **162** for each tier within the scope of the invention.

[0054] The air flow over the food in the tray **103** is controlled to enable an operator to control the amount of moisture that evaporates from the food. When the air flow direction is from the bottom to the top, i.e., from the lower air ducting **160** through the compartment **128** and into the upper air ducting **162**, convection heat is applied to the food in the tray from below the tray, and infrared heat is applied from the heat sources **146** above the tray **103**. By changing the direction of air flow so that air flows from top to bottom, the food can be cooked or held with a combination of convection heat and infrared heat directed from above the tray **103**. Depending on the food in the tray, air flow can be maintained continuously from one direction, e.g., always from bottom to top, throughout the cook/hold cycle. Alternately, the direction of the air flow can be reversed during the cook/hold cycle so that air flow is alternately directed from the bottom and from the top of the food product. In one embodiment, the forced air mechanism **154** supplies air while the heat sources **146** are activated and is turned off when the heat sources are deactivated.

[0055] Referring now to **FIG. 10**, each tray **103** is generally rectangular in plan, having a bottom **180**, opposite side walls each designated **182**, end walls each designated **184**, and an open top. As shown, each tray **103** has a rim **186**

comprising a pair of laterally extending lips **190** adapted for sliding sealing engagement with the respective support flanges **144** in a compartment. One or more openings such as indicated at **194** is/are provided in at least one of the bottom **180** and/or the side walls **182** and end walls **184** for allowing air to circulate through the tray **103** to vent moisture from each tray. **FIG. 10** shows a tray having sixteen openings **194** in the bottom **180** and each side wall **182** and **8** openings **194** in each end wall **184** arranged in a pattern such as illustrated. It is contemplated that the number, pattern and size of openings **194** may vary widely. For example, the openings **194** in the tray **103** may be circular, oval, square or other shape and each opening may have an area of between about 0.1 and about 1.0 square inch. It is desirable that the combined area of the openings **194** in the tray is less than about 50% of the area of the open top of the tray **103**, preferably less than about 25% and more preferably less than about 10% thereof. Also, it is contemplated that different trays **103** within the oven **101** may have different patterns of openings **194**. The combined areas of the openings **194** and/or the specific pattern of openings in the tray **103** will vary depending on the type and quantity of food in the tray **103**. Whatever the circumstances, the size and pattern of the opening(s) **194** can be selected to closely control the amount of moisture evaporated from the tray **103** and thus optimize the conditions for maintaining food quality over an extended period of time.

[**0056**] The control mechanism **140** is used to selectively control the environment, such as the temperature and/or air flow, in each compartment **128** of the holding oven **101**. As will be described more fully hereafter, the control mechanism **140** is operable to vary the amount of radiant heat as needed to maintain the food at a desired holding temperature to preserve the quality of the food for a longer period of time. As used herein, the term "selected holding temperature" means either a single substantially constant temperature (e.g., 180° F.) or a range of temperatures (e.g., 160-180° F.). In one embodiment, the control mechanism comprises suitable timer and duty cycle controls to control the length of the duty cycle of each heat source **146**, the term "duty cycle" meaning the ratio of heat source on-time to heat source on-time plus heat source off-time. The control mechanism **140** uses a suitable microprocessor and appropriate software to control relays **198** (**FIG. 11**) that activate the heat sources **146**, **170** and **172** and fans **156**.

[**0057**] **FIG. 11** is a simplified schematic of a portion of one embodiment of an oven control circuit, generally indicated at **196**, that is controlled by the control mechanism **140**. The circuit **196** operates the heat sources **146** in the multiple compartments **128** of the holding oven and the heat sources **170**, **172** in the upper and lower ducting **160**, **162**. In the embodiment shown, the control mechanism **140** regulates the heat sources in the holding oven **101** by energizing conventional relays **198**. It is understood that the control mechanism **140** may independently operate the heat sources **146** in the compartments **128**, such that the heat source **146** for one compartment may be actuated while the corresponding heat source for another compartment is at a different level of activation or deactivated. Additionally, the control mechanism **140** may independently operate the upper and lower duct heat sources **170**, **172** such that neither, one or both heat sources in a flow path may be operating, and such that, for example, the top heat source may be operated in one tier while the bottom heat source may be operated in another tier. Using a keypad **142** or other suitable operator input device, the control mechanism **140** can be programmed to control the heat sources **146**, **170** and **172** to adjust various parameters, such as, for example, the ambient hold time, the heated hold time, the total hold time, the percentage heater on time, the time base of the duty cycle, the cook or rethermalization time, and/or the temperature, as more fully described below. As such, the control mechanism **140** controls operation of the heat sources **146** independent of one another so that the temperature in each compartment **128** may be independently controlled.

[**0058**] Typically, the holding oven **101** will operate in at least two modes. In a first "cool down and hold" mode, the initial temperature of the food placed in the holding oven is higher than the desired holding temperature of the food, as is typically the case when the food has just been cooked in a cooking appliance (e.g., cooking or baking oven, frier, etc.) and then is transferred to the holding oven. In this mode, the control mechanism **140** is operable to maintain the heat source in a respective compartment **128** deactivated (or at a low level of activation) while the pre-cooked food in the compartment **128** cools down to the selected holding temperature during a duration of non-heated holding time, and for then controlling the heat source **146** in the compartment **128** to maintain the food in the compartment **128** at or near the selected holding temperature for a duration of heated holding time. In a second "heat up and hold" or "rethermalizing" mode, the initial temperature of the pre-cooked food placed in the oven is lower than the desired holding temperature of the food, as where the food has been cooked and then refrigerated before placement in the holding oven. In this mode, the control mechanism **140** is operable to activate the heat source in the compartment **128** to raise the temperature in the compartment **128** to the selected holding temperature during a duration of rethermalizing holding time, and for then controlling the heat source **146** in the at least one compartment **128** to maintain the food in the compartment **128** at the selected holding temperature for the duration of heated holding time. It will be understood that the oven **1** of **FIG. 1** can be used in a similar manner without departing from the scope of the invention.

[**0059**] **FIGS. 12 and 13** illustrate an example of the operation of the holding oven **101** in the first (cool down and hold) mode. In particular, **FIG. 12** illustrates a time vs. temperature curve for a complete duration of holding time D for one compartment **128** of the oven **101**, and **FIG. 13** illustrates a time vs. activation curve for the heat source **146** of that same compartment during the holding time duration D. The time vs. temperature curve of **FIG. 12** plots the temperature of the food product as a function of time. One skilled in the art will understand that this curve can be different for each type of food product to be held in the oven **101**.

[**0060**] In a cool down and hold situation, a food product is typically cooked as by frying, grilling, baking, etc., in a cooking appliance until a desired high internal temperature, usually between about 170 and 210 degrees Fahrenheit (° F.), is achieved. After the food is cooked, the food product is placed in a tray **103** and inserted into compartment **128** in the oven **101**. Alternatively, the food can be placed in the oven without the use of a tray. Using the keypad **142** or other input device, the operator selects a desired holding temperature, indicated at T, which will be lower than the temperature

Tc of the food initially placed in the compartment. The holding temperature T is the desired temperature for maintaining the pre-cooked food to preserve taste, appearance and/or other food quality. The operator also selects a duration of holding time D. The duration of holding time D is the total time the food is to be held in the oven **101** and maintained at a desired quality level. Alternatively, the control mechanism **140** can be programmed so that the operator need only select the type of food to be placed in the compartment and the control mechanism **140** automatically uses preselected settings for that type of food.

[**0061**] In general, when the holding oven is operating in the cool down and hold mode, it is desirable that food introduced into the oven be allowed to quickly cool down to the selected holding temperature, and that the food be held at this temperature thereafter. Thus, the duration of holding time D may comprise an ambient hold time, i.e., a period of non-heated cool-down time such as indicated at B in **FIG. 12**, during which time the food product is allowed to cool to the desired holding temperature T. Preferably, during the ambient hold time B, heat source **146** is either in a deactivated state or a state in which it is delivering a relatively low quantity of radiant heat to the food so that the food product may cool down more rapidly than if the heat source was at full power. The food product is allowed to cool for the ambient hold time B until it reaches the desired hold temperature T as illustrated at point A. In one embodiment, forced air flow from the forced air mechanism **154 (FIG. 9)** can be used to more rapidly decrease the temperature. After the internal temperature of the food decreases to the desired hold temperature T, the food is held near the desired hold temperature to preserve food quality for a period of heated hold time, indicated at C, comprising the remaining portion of the holding time duration D. During the heated holding time C, the heat source **146** may be operated in duty cycles to apply the appropriate amount of radiant heat to the food. Additionally, the control mechanism **140** controls the heat sources **170**, **172** and the fan system **156** to maintain the internal food temperature at or near the desired hold temperature T during the heated hold time C.

[**0062**] **FIG. 13** illustrates an embodiment in which the heat source **146** is successively activated and deactivated in a controlled sequence or duty cycle, indicated at G, to maintain the temperature in the compartment **128** near the selected holding temperature T. In this particular embodiment, each duty cycle G comprises a heating interval E during which time the heat source **146** is activated followed by a non-heating interval F during which time the heat source is deactivated. The time-base of the duty cycle G is the time required to complete one cycle of activation and deactivation of the heat source **146** as shown in **FIG. 13**. In one embodiment, the time-base of the duty cycle G and the percent on time of the heat source **146** (i.e., the duration of heating interval E divided by the time-base of the duty cycle G expressed as a percent) maintains the actual temperature within the compartment **128** within at least about 15 degrees of the desired temperature, preferably within at least about 10 degrees, more preferably within about 5 degrees, and even more preferably within about 2 degrees of the desired temperature.

[**0063**] The operator is able to set various parameters using the keypad **142** or other input device of the control mechanism **140**, such as the ambient hold time delay B, the heating interval E, the time-base of the duty cycle G, and/or total hold time D. These parameters can be selected by the operator or preset for the type of food product in the compartment **128** so that the operator need only select the proper food product. The control mechanism **140** in an oven **101** having more than one compartment **128** can control the duty cycle of the heat source **146** in each compartment to maintain the temperatures in the compartments at different levels.

[**0064**] Using the keypad **142** or other input device, an operator can also control the operation of the forced air mechanism **154 (FIG. 9)** by activating the fan system **156** or selecting the direction of forced air flow. In one embodiment, forced air flow from the forced air mechanism **154** conveys convective heating air into the compartments **128** at locations below the trays **103** for flow in a generally upward direction toward the trays **103**. Alternately, the ventilation system conveys heating air into the compartments **128** at locations above the trays **103** for flow in a generally downward direction toward the trays **103**. The fan system **156** can be operated such that heating air is circulated through the compartments **128** in one direction and then the direction of air flow is reversed to circulate heating air through the compartments **128** in the opposite direction. Using the keypad **142** or other input device of the control mechanism **140**, the operator is able to select the duration that the fan system **156** circulates air through the compartments **128**. For example, in one embodiment, the forced air mechanism **154** operates in a controlled sequence during the duty cycle G such that the fan system **156** is activated when the heat sources **146** are activated and is deactivated when the heat sources are deactivated. Alternately, the fan system **156** can be continuously activated for the duration of the total hold time D or can be activated so that the fan system is on a desired percentage of the duty cycle G independent of the heat sources. Preferably, the fan system **156** is activated a suitable percentage of the time to control the evaporation of moisture from the food in the compartment **128**. The percentage of time the fan system **156** is activated desirably depends on the type and/or the amount of food placed in the compartment **128**. The percentage of time the fan system **156** is activated and the direction of air flow can be selected by the operator or preset for the type of food product in the compartment **128** so that the operator need only select the proper food product. Additionally, the vertical position of at least one tray **103** in a respective compartment **128** may be varied.

[**0065**] Set forth below are exemplary oven settings for particular food products when the oven is operating in a cool down and hold mode.

EXAMPLE 1

Fried Chicken Nuggets

[**0066**]

Ambient hold time delay (B) =	10 minutes
Hold temperature (T) =	180° F.
Time-base of duty cycle (G) =	120 seconds
Percent on time (E) =	50%
Total hold time (D) =	60 minutes

EXAMPLE 2

Fried Apple Turnover

[0067]

Ambient hold time delay (B) =	25 minutes
Hold temperature (T) =	200° F.
Time base of duty cycle (G) =	120 seconds
Percent on time (E) =	40%
Total hold time (D) =	240 minutes

[0068] **FIGS. 14 and 15** illustrate an example of the operation of the oven **101** in the second (heat up and hold or rethermalizing) mode. In particular, **FIG. 14** illustrates a time vs. temperature curve for a complete hold cycle D for one compartment **128** of the oven **101**, and **FIG. 15** illustrates a time vs. activation curve for the heat source **146** of that same compartment during the hold cycle D. The time vs. temperature curve of **FIG. 14** plots the temperature of the food product as a function of time. One skilled in the art will understand that this curve can be different for each type of food product to be held in the oven **101**.

[0069] In this mode, the oven **101** is used to raise the temperature of a food product to a selected temperature and hold the food product at the selected temperature. A tray **103** containing a food product at an initial temperature T_I is placed into the compartment **128**. (Temperature T_I may vary from a frozen or refrigerated temperature to ambient or above.) Using the keypad **142** or other input device, the operator selects a desired holding temperature T (which will be higher than the initial food temperature T_I), and a duration of holding time D. Alternatively, the control mechanism **140** can be programmed so that the operator need only select the type of food to be placed in the compartment and the control mechanism **140** automatically uses preselected settings for that type of food. In either case, the control mechanism is operable to activate the heat source **146** to raise the temperature of the food product for a duration of heat-up or rethermalization time, indicated at I, the food reaching the holding temperature T at time H. The heat source **146** is then activated and deactivated during the heated holding time C for successive duty cycles G to maintain the food in the compartment **128** at the selected holding temperature T for the duration the total hold time D. In one embodiment, the duration of the heated holding time C includes intervals of the duty cycle G when the heat source **146** is activated as indicated by E and intervals during which the heat source is deactivated as indicated by F as described above.

[0070] Set forth below are exemplary oven settings for particular food products when the oven is operating in a heat-up and hold mode.

EXAMPLE 3

Diced Frozen Chicken

[0071]

Rethermalization time (I) =	40 minutes
Hold temperature (T) =	220° F.
Time-base of duty cycle (G) =	180 seconds

-continued

Percent on time (E) =	50%
Total hold time (D) =	160 minutes

EXAMPLE 4

Refrigerated Beef BBQ

[0072]

Rethermalization time (I) =	30 minutes
Hold temperature (T) =	210° F.
Time base of duty cycle (G) =	180 seconds
Percent on time (E) =	30%
Total hold time (D) =	240 minutes

[0073] With the heating system of the present invention and the capability of controlling the evaporation of moisture from the trays **103**, the holding time (D) for fast service cooked foods such as chicken and french fries is substantially increased, and good texture and taste are maintained. In this respect, controlling the rate of evaporation of moisture from chicken, for example, precludes drying out and toughening of the chicken fibers and precludes the breading from becoming dry and greasy. And with respect to french fries, for example, development of a dry, rubbery texture as moisture is lost and the outer skin loses crispness is precluded.

[0074] In the embodiments described above, the control mechanism **140** uses a duty-cycle system to control the amount of radiant heat delivered to the pre-cooked food by the heat sources. In this type of system, the percentage of heater on and off time is adjusted to vary the radiant energy as needed to maintain the food at the suitable holding temperature. It will be understood, however, that the control mechanism **140** can vary the amount of radiant energy delivered to the food in other ways. For example, the heat sources **146** may be variable-power heaters operable to deliver radiant heat at multiple discrete energy levels or at an infinite number of levels between full-power and zero power (as by varying the voltage to the heaters), and the control mechanism **140** may operate to increase and decrease the radiant heat delivered by the heaters in a controlled, preprogrammed manner to maintain a particular food at its ideal holding temperature.

[0075] The particular program used by the control mechanism **140** to control a heat source **146** for any given type of food may be determined empirically. Alternatively, the control mechanism **140** can include one or more sensors and one or more appropriate feedback loops for each compartment or group of components of the holding oven. For example, in one embodiment, at least one sensor is used in each compartment to detect a characteristic indicative of the temperature of the food in the compartment, and the control mechanism is responsive to signals received from the at least one sensor to control the heat source **146** to vary the radiant heat delivered to the pre-cooked food to maintain it at a holding temperature appropriate for that food. The characteristic detected by the one or more sensors may be the temperature

of the air in the compartment, or the temperature of a surface in the compartment, or the radiant IR energy emitted by the food in the compartment, or some other characteristic. Thus, the sensor may be a standard temperature sensor, or an IR emissions detector, or some other type of detector capable of detecting the aforesaid characteristic indicative of the temperature of the food in the compartment.

[**0076**] FIGS. **16-21** show another embodiment of food warming apparatus of this invention, generally designated **201**. The apparatus comprises a cabinet **203** having two horizontal tiers of compartments, two compartments per tier (each compartment being designated **207**). It will be understood that the number of tiers can vary from one to any number more than one, and that the number of compartments **207** in each tier may vary from one to any number more than one. In the particular embodiment shown, each compartment is sized to receive a single tray T, but it will be understood that each compartment **207** may be sized to receive more than one tray, or that some compartments may be sized to receive one tray and other compartments more than one tray. In other embodiments (to be discussed later), food is placed in one or more compartments **207** without the use of a tray.

[**0077**] The cabinet **203** has front and back panels **211**, **213** with openings **215** aligned with the compartments **207** in the cabinet to allow food (either in or out of trays T) to be placed into the compartments and removed from the compartments from both ends of the compartments. The cabinet also has a bottom wall **221**, side walls **223**, a top wall **225**, a vertical partition or divider **227** extending between the top and bottom walls of the cabinet to separate the two compartments **207** in each tier, and a horizontal partition or divider **231** extending between the side walls **223** to separate the compartments in the upper tier from the compartments in the lower tier. As a result, the interior of the cabinet is divided into a plurality of separate, thermally isolated holding compartments **207**, and each compartment is completely enclosed on opposite sides, top and bottom so that food flavors are prevented (or at least inhibited) from transferring between compartments. Suitable thermal insulation (not shown) is provided adjacent the walls of each compartment **207**.

[**0078**] As shown in **FIG. 19**, for example each compartment **207** has a heat source **235** for emitting radiant heat down on pre-cooked food in the compartment. As noted previously, this heat source **225** may comprise one or more IR heat lamps or the like, each mounted by a suitable fixture adjacent to the top wall of the compartment. A reflector **241** is provided in each compartment **207** over the best source **235** for reflecting radiant heat in a generally downward direction through a cover panel **245** of suitable material capable of transmitting the heat (e.g., glass). The food in the compartment **207** is positioned a distance D1 below the heat source **235**, as shown in **FIG. 19**. Distance D1 is desirably relatively small to reduce or minimize the size (e.g., vertical height) of the cabinet **203**. In one embodiment, for example, distance D1 is less than 12 in.; in another it is less than 11 in.; in another it is less than 10 in.; in another it is less than 9 in.; in another it is less than 8 in.; in another it is less than 7 in.; in another it is less than 6 in.; in another it is less than 5 in.; in another it is less than 4 in.; in another it is less than 3 in.; in another it is less than 2 in.; in another it is less than 1 in.; and in another it less than 0.5 in. In other embodiments, distance D1 may be in the range of 0.25 in. to **10** in., or in the range of 0.25 in. to **8** in., or in the range of 0.25 in. to **6** in., or in the range of 0.25 to 4 in., or in the range of 0.25 to 3 in., or in the range of 0.25 in. to **2** in., or in the range of 0.25 in. to **1** in. Where the pre-cooked food is placed in one or more trays, as shown in **FIG. 19**, each tray T is supported by supports **247** in a respective compartment **207** at an elevation where the bottom of the tray is spaced above the floor of the compartment a suitable distance D2. Distance D2 may be in the range of 0-12 in., and more preferably 0.5-1.0 in. Alternatively, the food may be placed on the floor of the compartment.

[**0079**] The heat sources **235** in the cabinet **203** are controlled by a suitable control mechanism **251**, similar to the control mechanism **140** described above, which can be used to operate each heat source **235** independently of the other heat sources to deliver varying amounts of radiant energy to the food in a respective compartment. In this manner, the amount of radiant energy delivered to the food in a compartment **207** can be closely controlled to maintain the food at an appropriate holding temperature for that particular food, as described above. Also, because the amount of radiant heat delivered to the food is varied as a function of time, the heat source **235** in each compartment **207** can be placed much closer to the food (e.g., distance D1 in **FIG. 19**, discussed above) which has the desirable advantage of reducing the size of the cabinet **203**. This is in contrast to conventional IR holding units where the energy delivered by the heat source is not variable. Rather, the heat source is energized to deliver full power all of the time. As a result, the heat source must be positioned relatively far from the food (e.g., 12 in. or more).

[**0080**] In one embodiment, the control mechanism **251** is programmed for different types of food, so that after food has been placed in a particular compartment **207**, an operator simply selects that type of food from a suitable menu on a display (not shown) on the cabinet. The control mechanism then automatically selects the appropriate heating protocol for the food selected, including one or more of the following: the ideal holding temperature for the food selected; the duration of holding time ("holding duration"); and the manner in which the heat source in each compartment is to be varied to maintain the food at the desired holding temperature (e.g., percent on time during each duty cyle, if duty cycles are used). For convenience, the control **251** also includes a timer which times out the holding duration, and a display **255** which shows the time remaining until the end of holding duration. The control mechanism **251** may also include a visual and/or audible alarm for alerting an operator at a predetermined time before the end of the holding duration, so that steps can be taken to start cooking a fresh batch or batches of additional food. (At the end of a holding duration, any food remaining in the compartments **207** is typically disposed of and replaced by freshly cooked food.)

[**0081**] As noted previously, an important aspect of this invention is the ability of the control mechanism **251** to vary the amount of radiant heat delivered by the heat source in each compartment **207** to the pre-cooked food in the compartment. In general, or at least typically, it is desirable that pre-cooked food introduced into the compartment be allowed to cool down as quickly as possible to the desired holding temperature, and that the food be held relatively constant at the desired holding temperature using a mini-

mum of power to the heat source **235**. The graphs in **FIGS. 22A and 22B** illustrate this concept. **FIG. 22A** graphs time v. temperature in one compartment **207**. Pre-cooked food introduced into the compartment at time To cools down to the desired holding temperature at time T_1. Thereafter, the food is substantially maintained at the holding temperature for the remainder of the holding duration D. **FIG. 22B** is a graph of time v. the radiant energy delivered by the heat source **235** to the food. In the particular embodiment shown in this graph, the heat source is operated at a first relatively low level (where the heater is either off or delivering radiant heat at low level of energy or power) during a first phase **P1** from time T_0 to time T_1, so that little or no radiant energy is delivered to the food. As a result, the temperature of the food declines relatively rapidly toward ambient temperature. When the temperature of the food approaches (or reaches) the desired holding temperature, the control mechanism **251** causes the heat source **235** in the compartment **207** to deliver radiant heat at a second higher level (e.g., 70% of maximum) to stop the decline in temperature of the food and hold it at about the desired holding temperature during a second phase **P2** from time T_1 to time T_2. After the temperature of the food has equilibrated at the desired holding temperature, which will vary depending on the particular type of food, the control mechanism **251** causes the heat source **235** to reduce the amount of radiant heat delivered to the food to a third level (e.g., 30% maximum) sufficient to maintain the food at the desired holding temperature during a third phase **P3** from time T2 until the end of the holding period at time T3.

[**0082**] It will be understood that the graphs shown in **FIGS. 22A and 22B** can vary, and that the number of phases **P1**, **P2**, **P3** discussed above can vary without departing from the scope of this invention.

[**0083**] **FIG. 23** shows another embodiment of a holding oven of this invention, generally designated **301**. The oven is similar to those described above except that the cabinet of the unit has only one compartment. In this embodiment, food is not placed in a tray, but rather on the bottom wall **307** or other supporting surface in the compartment, and the heat source **311** is closely spaced above the food to heat the food and maintain it at the desired holding temperature. The spacing D1 between the food and the IR heat source is relatively small (as discussed above) to reduce the overall height dimension of the oven **301**. The heat source **311** is controlled by a control mechanism **140**, **251** of the type described above.

[**0084**] **FIG. 24** shows a holding oven, generally designated **401**, which is similar to the oven shown in **FIG. 23**. In this embodiment, the single compartment **403** of the oven is sized to hold multiple trays T. All other aspects of the oven, including the heat source and control mechanism, are the same.

[**0085**] **FIG. 25** shows a holding oven, generally designated **501**, which is similar to the oven shown in **FIG. 24** except that the oven is divided into three compartments **503**, each of which is capable of receiving food placed on the bottom wall or other supporting surface in the compartment. Partitions **507** between the compartments prevent or at least inhibit the transfer of food flavors between adjacent compartments. Each compartment **503** has its own heat source **511** which is spaced relatively closely to the bottom wall of the compartment to maintain the distance between the food and the heat source within the ranges (e.g., distance D1) described above. The heat sources **511** are controlled by a control mechanism similar to the control mechanism **140**, **251** described above.

[**0086**] When introducing elements of the present invention or the preferred embodiment(s) thereof, the articles "a", "an", "the" and "said" are intended to mean that there are one or more of the elements. The terms "comprising", "including" and "having" are intended to be inclusive and mean that there may be additional elements other than the listed elements.

[**0087**] In view of the above, it will be seen that the several objects of the invention are achieved and other advantageous results attained. As various changes could be made in the above constructions without departing from the scope of the invention, it is intended that all matter contained in the above description or shown in the accompanying drawings shall be interpreted as illustrative and not in a limiting sense.

What is claimed is:

1. Food holding apparatus for holding pre-cooked food at a selected holding temperature, said apparatus comprising:

a cabinet having at least one holding compartment therein;

pre-cooked food in the holding compartment, said food having been previously cooked in a cooking appliance;

at least one radiant heat source spaced above the food a distance less than 12 inches for delivering radiant heat to the food; and

a control mechanism for varying the amount of radiant heat delivered by the heat source to the food to maintain the food at said selected holding temperature.

2. Food warming apparatus as set forth in claim 1 wherein said distance is less than 10 in.

3. Food warming apparatus as set forth in claim 1 wherein said distance is less than 8 in.

4. Food warming apparatus as set forth in claim 1 wherein said distance is less than 6 in.

5 Food warming apparatus as set forth in claim 1 wherein said distance is less than 4 in.

6. Food warming apparatus as set forth in claim 1 wherein said distance is less than 2 in.

7. Food warming apparatus as set forth in claim 1 wherein said distance is in the range of 0.25-10 in.

8. Food warming apparatus as set forth in claim 1 wherein said distance is in the range of 0.25-8 in.

9. Food warming apparatus as set forth in claim 1 wherein said distance is in the range of 0.25-6 in.

10. Food warming apparatus as set forth in claim 1 wherein said distance is in the range of 0.25-4 in.

11. Food warming apparatus as set forth in claim 1 werein said distance is in the range of 0.25-2 in.

12. Food warming apparatus as set forth in claim 1 further comprising partitions in the cabinet dividing the cabinet into a plurality of separate, thermally isolated holding compartments, at least one tray in each of said holding compartments holding pre-cooked food therein, at least one radiant heat source spaced above the pre-cooked food in said tray a distance less than 12 inches for delivering radiant heat to the food, and said control mechanism being adapted for con-

trolling operation of the heat sources independent of one another whereby the temperature in each compartment may be independently controlled.

13. Food warming apparatus as set forth in claim 1 wherein said control mechanism is operable to vary the radiant heat delivered by said at least one heat source to the food through a duration of holding time, said duration comprising a first phase at which radiant heat is delivered to the food by the heat source at a first level to permit said pre-cooked food to cool down to said selected holding temperature, and a second phase at which radiant heat is delivered to the food by the heat source at a second level higher than said first level to hold the food at said selected holding temperature.

14. Food warming apparatus as set forth in claim 13 wherein said duration of holding time further comprises a third phase at which radiant heat is delivered to the food at a third level less than said second level to maintain said pre-cooked food at said holding temperature.

15. Food warming apparatus as set forth in claim 1 wherein said control mechanism comprises at least one sensor in the compartment for detecting a characteristic indicative of the temperature of the pre-cooked food in the compartment, the control mechanism being responsive to signals from said sensor to vary the amount of radiant heat delivered by the heat source to the food to maintain the food at said selected holding temperature.

16. Food warming apparatus as set forth in claim 15 wherein said sensor is a temperature sensor for detecting the temperature of a surface in the compartment.

17. Food warming apparatus as set forth in claim 15 wherein said sensor is operable to detect radiant energy emitted by said pre-cooked food.

18. Food warming apparatus as set forth in claim 1 wherein said control mechanism is programmed to operate said heating source according to a predetermined protocol to vary said radiant energy delivered to said food depending on the type of pre-cooked food placed in the compartment.

19. A method of preserving cooked food, comprising the steps of:

cooking food in a cooking appliance to provide pre-cooked food;

placing the pre-cooked food in a holding compartment of food warming apparatus for a duration of holding time; and

heating the pre-cooked food in the holding compartment for at least a portion of said duration of holding time by delivering radiant heat to the food;

said heating step comprising varying the amount of radiant heat delivered to the pre-cooked food to maintain the food at a selected holding temperature.

20. A method as set forth in claim 19 wherein said pre-cooked food placed in the compartment is at a temperature greater than ambient temperature, and said heating step comprises not delivering any substantial radiant heat to the pre-cooked food until the food has cooled to a temperature approaching said selected holding temperature.

21. A method as set forth in claim 19 wherein said pre-cooked food placed in the compartment is at a temperature below ambient temperature, and said heating step comprises delivering radiant heat to the pre-cooked food until the food reaches said selected holding temperature.

22. A method as set forth in claim 19 further comprising sensing a characteristic indicative of the temperature of the pre-cooked food in the compartment, and varying the amount of radiant heat delivered to the food according to said sensed characteristic.

23. A method as set forth in claim 22 wherein said sensed characteristic is a temperature of a surface in said holding compartment.

24. A method as set forth in claim 22 wherein said sensed characteristic is an amount of radiant energy emitted by said pre-cooked food.

25. A method as set forth in claim 19 further comprising placing said pre-cooked food in said holding oven at a location within a distance of less then 12 in. from a source of overhead radiant heat.

26. A method as set forth in claim 19 further comprising placing said pre-cooked food in said holding oven at a location within a distance of less then 10 in. from a source of overhead radiant heat.

27. A method as set forth in claim 19 further comprising placing said pre-cooked food in said holding oven at a location within a distance of less then 8 in. from a source of overhead radiant heat.

28. A method as set forth in claim 19 further comprising placing said pre-cooked food in said holding oven at a location within a distance of less then 6 in. from a source of overhead radiant heat.

29. A method as set forth in claim 19 further comprising placing said pre-cooked food in said holding oven at a location within a distance of less then 4 in. from a source of overhead radiant heat.

30. A method as set forth in claim 19 further comprising placing said pre-cooked food in said holding oven at a location within a distance of less then 2 in. from a source of overhead radiant heat.

31. A method as set forth in claim 19 wherein said amount of radiant heat is varied by activating and deactivating a source of radiant heat.

32. A method as set forth in claim 19 wherein said amount of radiant heat is varied by increasing and decreasing the level of radiant heat delivered by a source of radiant heat without deactivating the heat source.

* * * * *