OPERATORS MANUAL

Your Solutions Partner

INFRARED HEATSINK ™ HOLDING UNIT

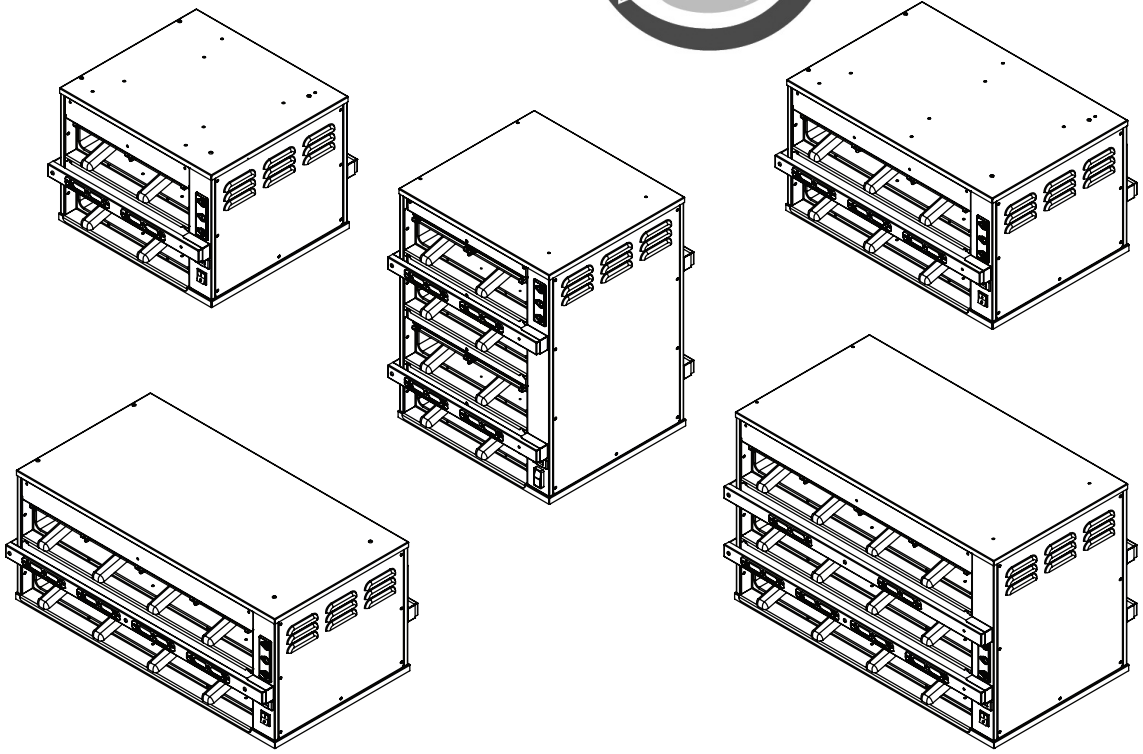

MODELS

IRHS22
IRHS23
IRHS24
IRHS34
IRHS42

IMPORTANT INFORMATION, READ BEFORE USE.
PLEASE SAVE THESE INSTRUCTIONS.

This manual is Copyright © 2014 Duke Manufacturing Company. All rights reserved. Reproduction without written permission is prohibited. Duke is a registered trademark of the Duke Manufacturing Company.

Duke Manufacturing Company

2305 N. Broadway
St. Louis, MO 63102
Phone: 314-231-1130
Toll Free: 1-800-735-3853
Fax: 314-231-5074
www.dukemfg.com

P/N 229945D
02/18/14

Duke Manufacturing Co. EX1005
U.S. Patent No. 10,512,363

TABLE OF CONTENTS

Manufacturer's Introduction....4
Important Safety Instructions....5
Specifications....6
Installation....11
Stacking Units....12
Kitchen Minder Connections....12
Cleaning Guide....13
Diagnostics....15
Operating Instructions....16
Parts Lists And Illustrations....19
Troubleshooting....21
Wiring Schematic....22

MANUFACTURER'S INTRODUCTION

The IRHS Holding Unit was developed specifically to address the needs of Burger King restaurant operations and profitability. Extended hold times with improved food quality and consistency were achieved through the innovative combination of two proven, patented Duke technologies: InfraRed and HeatSink. This new technology allows you to precisely control the environment in each pan, allowing customized settings for each food product. This gives you the ability to maintain gold standard sensory attributes at drastically extended hold times while delivering hotter food to your customers.

In addition to providing the most robust and reliable solution technically possible, we also made the following improvements from the previous FWM PHU model:

- Eliminated plastic lids and replaced with a robust aluminum Heat Sink Cover for broiled foods
- Eliminated grease migration concerns
- Eliminated plastic faceplate and plastic lid capture system
- Changed to a more robust Duke timer bar and control system

Throughout this manual, you will uncover more details about the benefits and advantages that the Duke IRHS will bring to your restaurant. Thank you for your purchase and as always, your feedback is appreciated.

IMPORTANT SAFETY INSTRUCTIONS

Throughout this manual, you will find the following safety words and symbols that signify important safety issues with regards to operating or maintaining the equipment.

⚠WARNING **Indicates a hazardous situation which, if not avoided, could result in death or serious injury.**

⚠ CAUTION **Indicates a hazardous situation which, if not avoided, could result in minor or moderate injury.**

CAUTION **Indicates Important Information**

Indicates electrical shock hazard which, if not avoided, could result in death or serious injury and/or equipment damage.

Indicates hot surface which, if not avoided, could result in minor or moderate injury.

In addition to the warnings and cautions in this manual, use the following guidelines for safe operation of the unit.

- Read all instructions before using equipment.
- For your safety, the equipment is furnished with a properly grounded cord connector. Do not attempt to defeat the grounded connector.
- Install or locate the equipment only for its intended use as described in this manual.
- Do not use corrosive chemicals in this equipment.
- Do not operate this equipment if it has a damaged cord or plug, if it is not working properly, or if it has been damaged or dropped.
- This equipment should be serviced by qualified personnel only. Contact the nearest Duke authorized service facility for adjustment or repair.
- Do not block or cover any openings on the unit.
- Do not immerse cord or plug in water.
- Keep cord away from heated surfaces.
- Do not allow cord to hang over edge of table or counter.

The following warnings and cautions appear throughout this manual and should be carefully observed.

- Turn the unit off, disconnect the power source and allow unit to cool down before performing any service or maintenance on the unit.
- The procedures in this manual may include the use of chemical products. You must read the Material Safety Data Sheets before using any of these products.
- The unit should be grounded according to local electrical codes to prevent the possibility of electrical shock. It requires a grounded receptacle with separate electrical lines, protected by fuses or circuit breaker of the proper rating.
- Disposal of the unit must be in accordance with local environmental codes and/or any other applicable codes.
- This appliance is not intended for use by persons (including children) with reduced physical, sensory or mental capabilities, or lack of experience and knowledge, unless they have been given supervision or instruction concerning use of the appliance by a person responsible for their safety.

SPECIFICATIONS

IRHS22 Specification Sheet

Shipping Weight:	115 lbs/52 kg		
Electrical:	IRHS22-208	208 V ~, 12 A, 50/60 Hz	NEMA 6-15P
	IRHS22-230	230 V ~, 12 A, 50/60 Hz	SHUKO PLUG, 16 AMP
	IRHS22-240	240 V ~, 12 A, 50/60 Hz	NEMA 6-15P

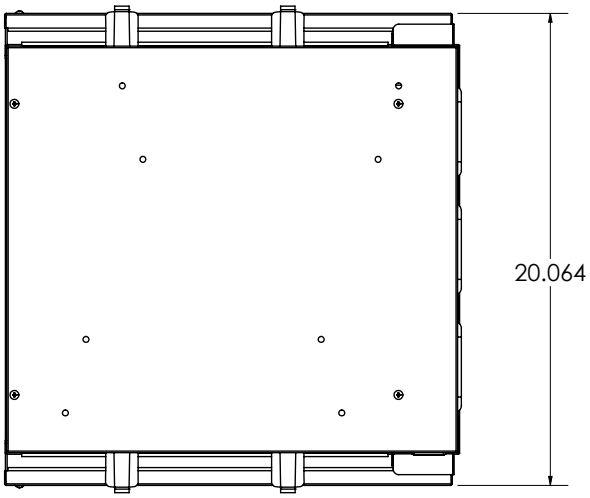

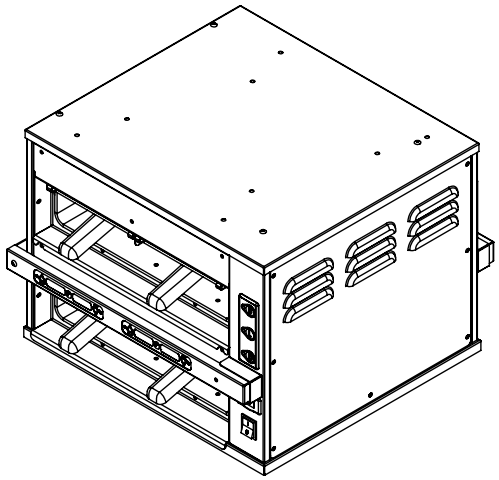

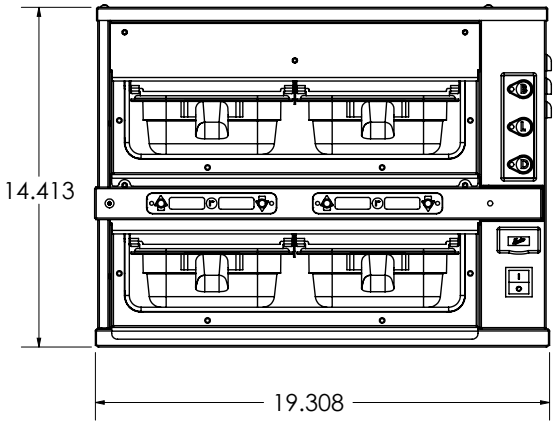

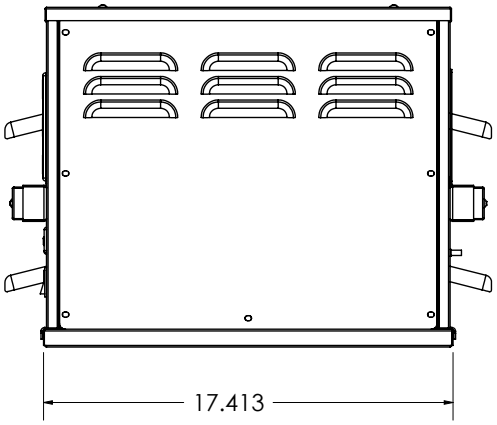

IRHS23 Specification Sheet

Shipping Weight:	130 lbs/59 kg		
Electrical:	IRHS23-208	208 V ~, 12 A, 50/60 Hz	NEMA 6-15P
	IRHS23-230	230 V ~, 12 A, 50/60 Hz	SHUKO PLUG, 16 AMP
	IRHS23-240	240 V ~, 12 A, 50/60 Hz	NEMA 6-15P

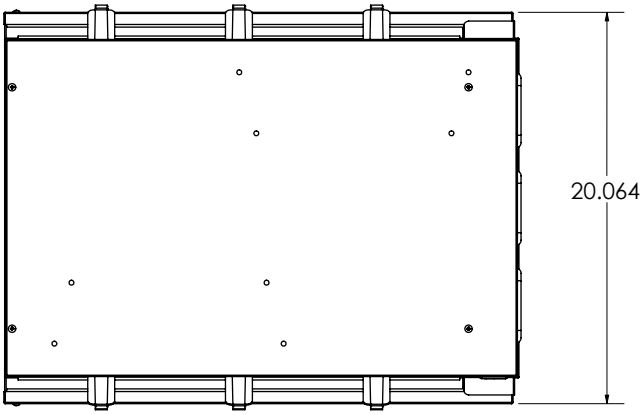

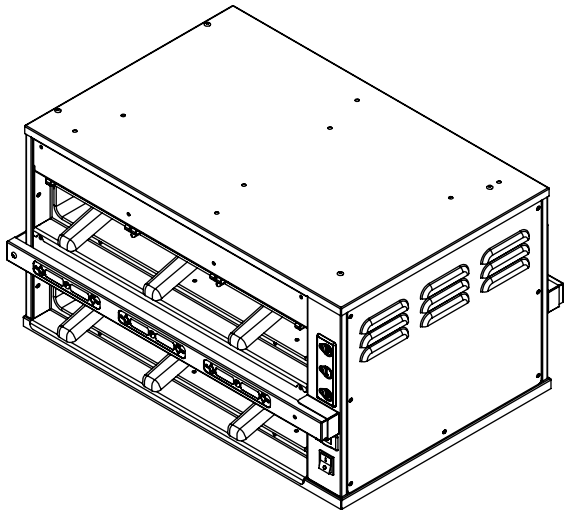

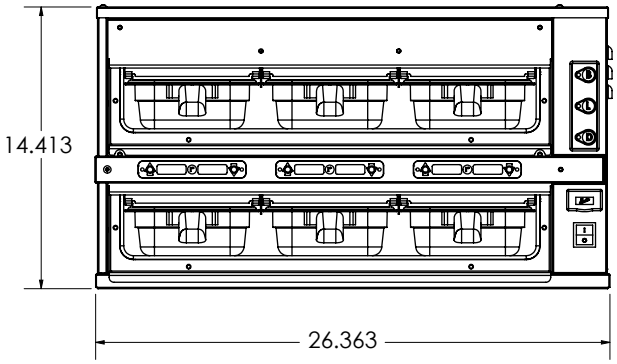

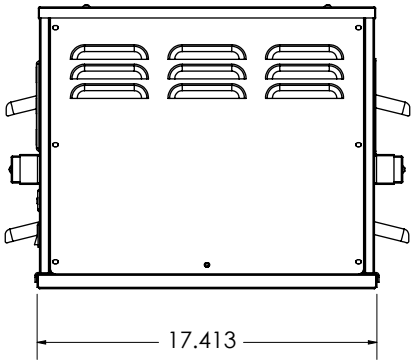

IRHS24 Specification Sheet

Shipping Weight:	165 lbs/75 kg		
Electrical:	IRHS24-208	208 V ~, 12 A, 50/60 Hz	NEMA 6-15P
	IRHS24-230	230 V ~, 12 A, 50/60 Hz	SHUKO PLUG, 16 AMP
	IRHS24-240	240 V ~, 12 A, 50/60 Hz	NEMA 6-15P

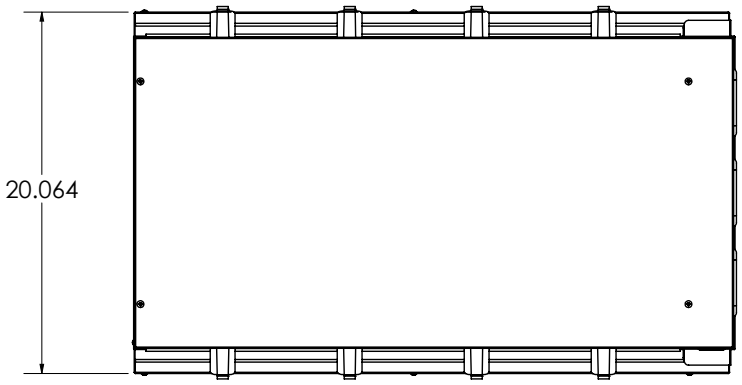

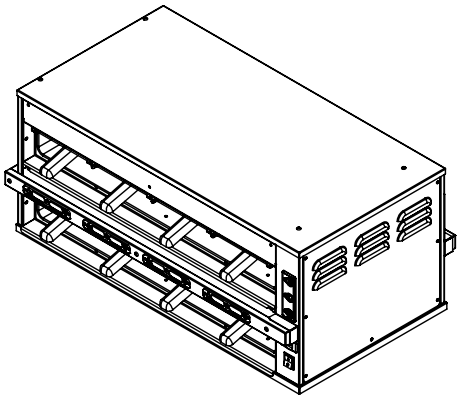

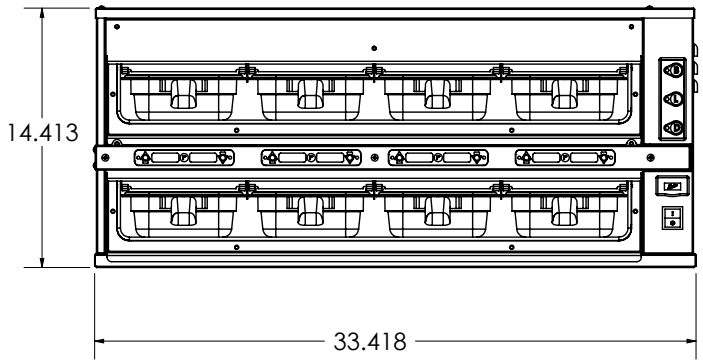

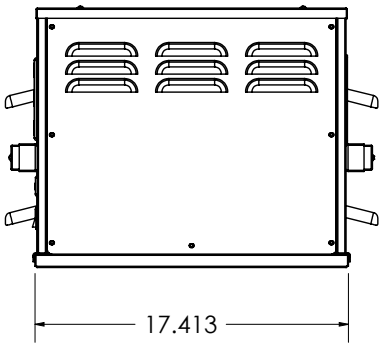

IRHS34 Specification Sheet

Shipping Weight:	240 lbs/109 kg		
Electrical:	IRHS34-208	208 V ~, 16 A, 50/60 Hz	NEMA 6-20P
	IRHS34-230	230 V ~, 16 A, 50/60 Hz	PIN & SLEEVE, 16AMP
	IRHS34-240	240 V ~, 16 A, 50/60 Hz	NEMA 6-20P

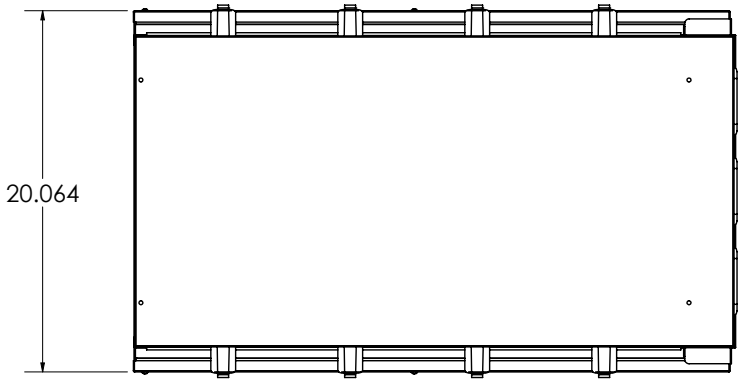

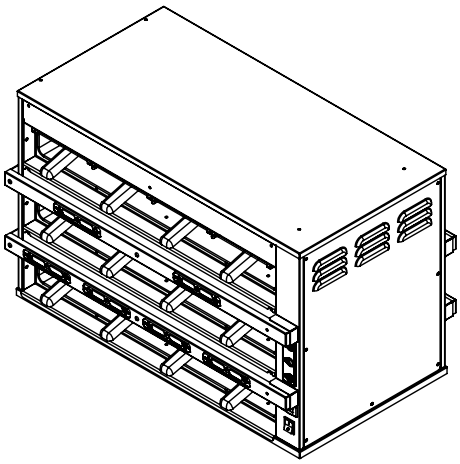

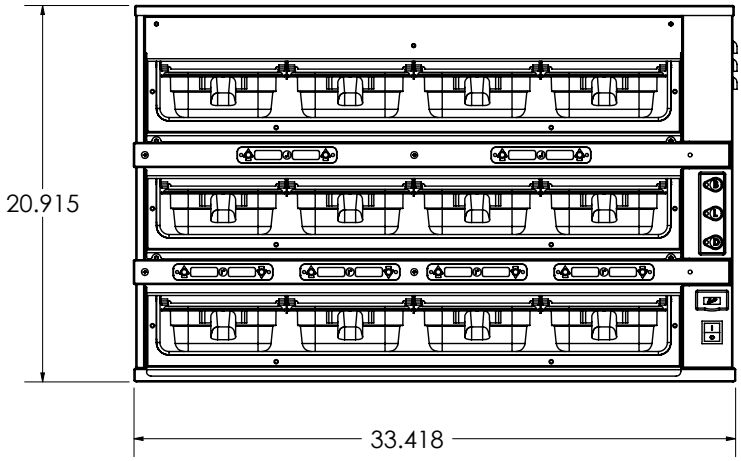

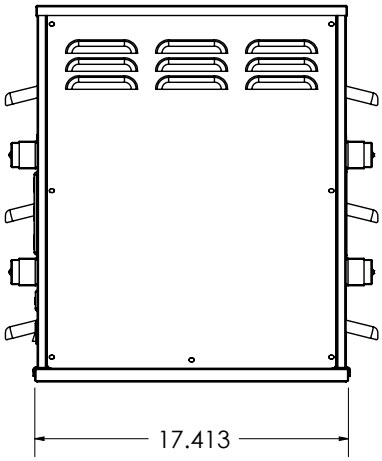

IRHS42 Specification Sheet

Shipping Weight:	165 lbs/75 kg		
Electrical:	IRHS42-208	208 V ~, 12 A, 50/60 Hz	NEMA 6-15P
	IRHS42-230	230 V ~, 12 A, 50/60 Hz	SHUKO PLUG, 16 AMP
	IRHS42-240	240 V ~, 12 A, 50/60 Hz	NEMA 6-15P

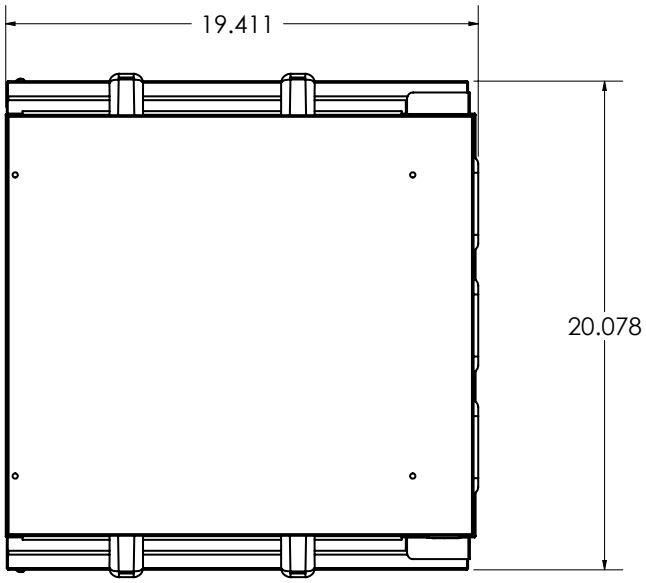

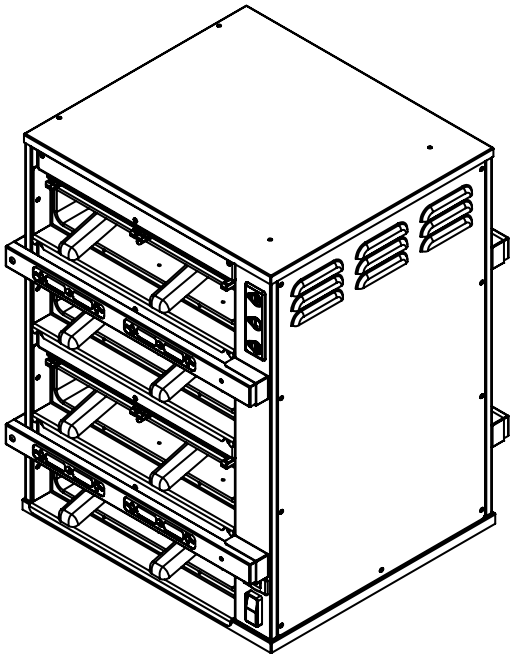

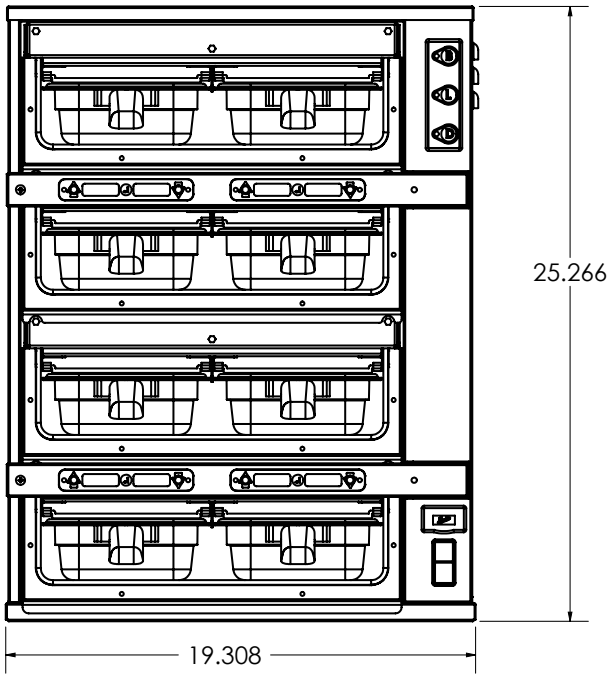

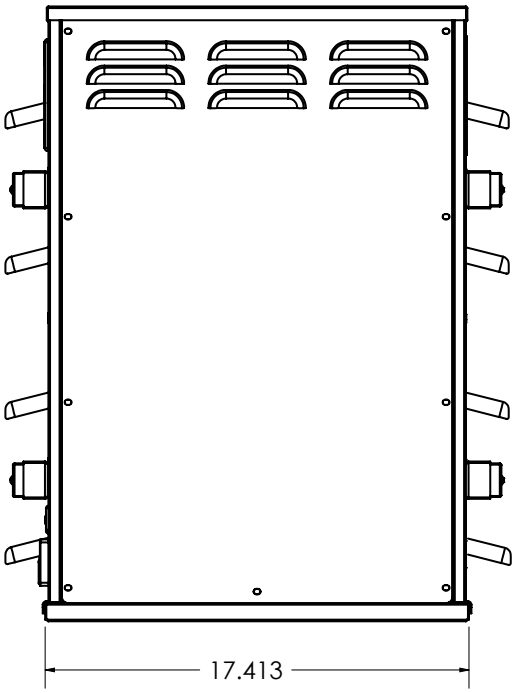

INSTALLATION

UNPACKING UNIT

Inspect the shipping carton and/or container, carefully noting any exterior damage on the delivery receipt; also note any damage not evident on the outside of the shipping container (concealed damage). Contact the carrier immediately and file a damage claim with them. Save all packing materials when filing a claim. Freight damage claims are the responsibility of the purchaser and are not covered by the warranty.

- Follow the instructions on the Carton Box for unpacking the unit.
- Inspect unit for damage such as, broken glass, etc.
- Report any dents or breakage to source of purchase immediately.
- **Do not attempt to use unit if damaged.**
- Remove all materials from unit interior.
- If unit has been stored in extremely cold area, wait a few hours before connecting power.

INSTALLATION CODES AND STANDARDS

In the United States, the IRHS must be installed in accordance with the following:

1. State and local codes.
2. National Electrical Code (ANSI/NFPA No. 70, latest edition) available from the National Fire Protection Association, Batterymarch Park, Quincy, MA 02269.
3. Vapor Removal from Cooking Equipment, (NFPA-96, latest edition) available from NFPA.

In Canada, the IRHS must be installed in accordance with the following:

1. Local codes.

Canadian Electrical Code (CSA C22.2 No. 3, latest edition) available from the Canadian Standards Association, 5060 Spectrum Way, Mississauga, Ontario, Canada L4W 5N6.

UNIT PLACEMENT

- Do not install unit next to or above source of heat such as oven or deep fat fryer.
- Install unit on level counter top surface.
- Outlet should be located so that plug is accessible when the unit is in place.
- The following minimum clearances must be maintained between the warmer and any combustible or non-combustible substance:

Unit	Clearance
Right Side	0”
Left Side	0”
Rear	8”
Floor	0”

Proper airflow around unit will cool the electrical components. With restricted airflow, the unit may not operate properly and the life of the electrical components may be reduced.

⚠WARNING ⚠

ELECTRICAL SHOCK HAZARD UNIT MUST BE SAFETY GROUNDED, EARTHED.

DO NOT MODIFY, DEFEAT ELECTRICAL CONNECTIONS OR ALTER PLUG.

ELECTRICAL CONNECTIONS

⚠WARNING BEFORE CONNECTING THE UNIT TO THE POWER SOURCE, VERIFY THAT THE VOLTAGE AND PHASE OF THE POWER SOURCE ARE IDENTICAL TO THE VOLTAGE AND PHASE INFORMATION ON THE DATA LABEL.

EARTHING INSTRUCTIONS

THE UNIT MUST BE GROUNDED. Grounding reduces risk of electric shock by providing an escape wire for the electric current if an electrical short occurs. This unit is equipped with a cord having a grounding wire with a grounding plug. The plug must be plugged into a receptacle that is properly installed and grounded.

Consult a qualified electrician or service agent if grounding instructions are not completely understood, or if doubt exists as to whether the oven is properly grounded.

DO NOT USE AN EXTENSION CORD. If the product power cord is too short, have a qualified electrician install a three-slot receptacle (or the country specific receptacle for International Units). This unit should be plugged into a separate circuit with the electrical rating as provided on the product data plate.

STACKING UNITS

The IRHS Holding Unit is designed to allow limited stacking capabilities. This section outlines how to safely stack the holding unit.

Step 1

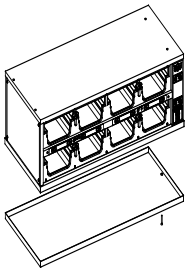

Remove the base pan from all holding units, except for bottom unit, that are to be stacked. The pan is held in place by two screws on the bottom of the unit.

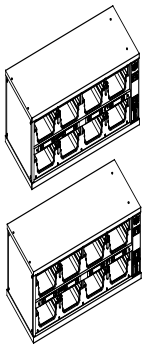

Step 2

Place bottom unit into position then stack the next unit on top. The top of the lower holding unit rests inside of the base of the upper unit.

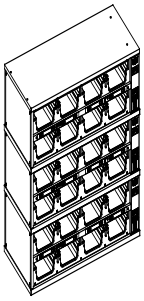

⚠ WARNING TIP HAZARD! DO NOT STACK IRHS34 UNITS. DO NOT EXCEED 3 HOLDING UNITS PER STACK. DO NOT PLACE HOLDING UNIT STACKS ON SURFACES THAT MAY EASILY TIP OVER.

KITCHEN MINDER CONNECTIONS

(OPTIONAL UPGRADE; NOT AVAILABLE ON STANDALONE UNIT)

MASTER	SATELLITE 1 (WMR 2)	SATELLITE 2 (WMR 3)
IRHS 2X2	2X2, 2X3, 2X4, 4X2	2X2, 2X3, 2X4, 4X2, *3X4
IRHS 2X3	2X2, 2X3, 2X4, 4X2	2X2, 2X3, 2X4, 4X2, *3X4
IRHS 2X4	2X2, 2X3, 2X4, 4X2	2X2, 2X3, 2X4, 4X2, *3X4
IRHS 3X4	NOT AVAILABLE	2X2, 2X3, 2X4, 4X2, *3X4
IRHS 4X2	2X2, 2X3, 2X4, 4X2	2X2, 2X3, 2X4, 4X2, *3X4

***IF A 3X4 IS USED AS SATELLITE 2 THIS ELIMINATES THE CAPABILITY OF A SATELLITE 1**

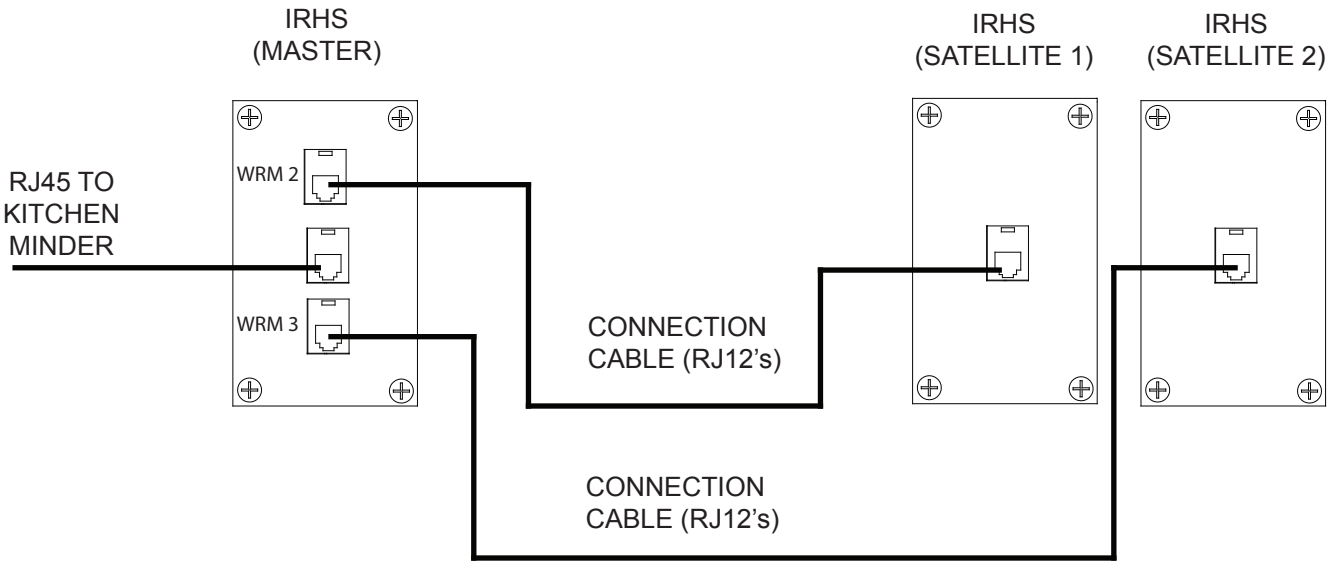

CLEANING GUIDE

⚠ CAUTION **Electrical shock hazard. Do not wash with water jet or hose.**

DO NOT USE CAUSTIC CLEANERS, ACIDS, AMMONIA PRODUCTS OR ABRASIVE CLEANERS OR ABRASIVE CLOTHS. THESE CAN DAMAGE THE STAINLESS STEEL AND PLASTIC SURFACES.

⚠ WARNING **Bottom and sides of warmer wells are very hot and cool slowly.**

DAILY CLEANING

- Stainless Steel Surfaces

To prevent discoloration or rust on stainless steel several important steps need to be taken. Stainless steel contains 70-80% iron which will rust. It also contains 12-30% chromium which forms an invisible passive film over the steel surface which acts as a shield against corrosion. As long as the protective layer is intact, the metal will not corrode. If the film is broken or contaminated, outside elements can begin to breakdown the steel and begin to form rust or discoloration.

Proper cleaning of stainless steel requires soft cloths or plastic scouring pads.

⚠ CAUTION

Never use steel pads, wire brushes or scrapers.

Cleaning solutions need to be alkaline based or non-chloride cleaners. Any cleaner containing chlorides will damage the protective film of the stainless steel. Chlorides are also commonly found in hard water, salts and household and industrial cleaners. If cleaners containing chlorides are used, be sure to rinse repeatedly and dry thoroughly upon completion.

Routine cleaning of stainless steel can be done with soap and water. Extreme stains or grease should be cleaned with a non-abrasive cleaner and plastic scrub pad. It is always good to rub with the grain of the steel. There are also stainless steel cleaners available which can restore and preserve the finish of the steels protective layer.

Early signs of stainless steel breakdown can consist of small pits and cracks. If this has begun, clean thoroughly and start to apply stainless steel cleaners in an attempt to restore the passivity of steel.

⚠ WARNING **NEVER USE AN ACID BASED CLEANING SOLUTION! MANY FOOD PRODUCTS HAVE AN ACIDIC CONTENT WHICH CAN DETERIORATE THE FINISH. BE SURE TO CLEAN ALL FOOD PRODUCTS FROM ANY STAINLESS STEEL SURFACE. COMMON ITEMS INCLUDE, TOMATOES, PEPPERS AND OTHER VEGETABLES.**

⚠ WARNING **THE POWER MUST BE TURNED OFF AND DISCONNECTED AT ALL TIMES WHEN PERFORMING MAINTENANCE OR REPAIR FUNCTIONS.**

CAUTION **NEVER USE A HIGH-PRESSURE WATER WASH FOR THIS CLEANING PROCEDURE AS WATER CAN DAMAGE ELECTRICAL COMPONENTS**

CAUTION **ELECTRICAL SHOCK HAZARD. DO NOT WASH WITH WATER JET OR HOSE.**

DANGER GLASS: INSPECT GLASS DAILY FOR CHIPS, CRACKS, OR BREAKING. DISCARD ALL FOOD AND NOTIFY MANAGER IF ANY CHIPS, CRACKS, OR BROKEN GLASS ARE FOUND. DO NOT USE EQUIPMENT. ALL GLASS MUST BE IN GOOD CONDITION BEFORE USING EQUIPMENT TO HOLD FOOD.

RECOMMENDED SUPPLIES

Cleaning Towels

Non-Scratch Scrub Pad

SYR Cleaning Brush Tool

KAY™ Degreaser

KAY® SINK SANITIZER, KAYQUAT™ Sanitizer, or compatible sanitizer

PROCEDURE

1. Turn unit off, unplug, and allow to cool for 30 minutes.
2. Remove all holding pans and heat sink covers. Wash, rinse, and sanitize at the 3-compartment sink.
3. Allow to air dry.
4. Spray a cleaning towel, or non-scratch scrub pad when necessary, with soapy solution or KAY™ Degreaser. Fully clean upper glass surfaces by hand, as well as lower heat sink surfaces.

NOTE: Never spray cleaning solution directly onto the cabinet.

5. If daily cleaning is performed routinely, deeper, more aggressive, cleaning methods can be avoided. Over longer periods of time, fried food product can accumulate and bake on to the upper glass surfaces of the compartments. The SYR Cleaning Brush Tool can be used to remove heavier accumulation.
6. Spray the brush head with KAY™ Degreaser and use the SYR Cleaning Brush Tool, as shown below, by gently sliding in and out of each compartment.

7. Use a sanitizer-soaked towel and wipe out all compartments on the holding unit. Wipe top compartments first, and then lower compartments.

IMPORTANT: Use clean, sanitizer-soaked towels (Important: towels must be wrung out so that they are damp and not dripping, dripping towels may harm the unit.)

DAILY INSPECTION CHECKLIST:

- Inspect glass for chips, cracks, or breaking.

Make sure that:

- Unit is free of any visible food soils.
- Unit is free of grease or soils in holding compartment.
- Exterior of unit is free of smudges or soil.
- Holding pans are free of any food soil residue.
- Pans are free of damage such as cracks.

DIAGNOSTICS

IR BULB FUNCTION

- IR bulbs are either ON or OFF.
- Select an arrow to initiate a hold cycle.
- After heat up (Display will show Product Names), visually confirm the IR bulb comes on.

DIAGNOSTICS

The temperature control performs a routine, internal check after turning the unit on to validate the unit is sensing temperature and heating properly. In the event of a problem, an error will display on the timer bar.

BULB – IR BULB CIRCUIT FAULT

- Indicates a fault with a specified IR Bulb circuit. The affected pan location is not available for timing product and a qualified service technician should be contacted to identify the cause of the fault.

HIGH – OVER-TEMPERATURE FAULT

- Indicates a fault with a heating circuit component. The affected pan location is not available for timing product and a qualified service technician should be contacted to identify the cause of the fault.

LOW – UNDER-TEMPERATURE FAULT

- Indicates a fault with a heating circuit component. The affected pan location is not available for timing product and a qualified service technician should be contacted to identify the cause of the fault.

SENS – SENSOR FAULT

- May indicate the unit has been programmed improperly (i.e. loading a 2x4 product configuration file into a 2x2 unit). An attempt to properly reprogram the unit should be made.
- May indicate a fault with a heat sink temperature sensor. The affected pan location is not available for timing product and a qualified service technician should be contacted to identify the cause of the fault

TEMPERATURE CHECK PROCEDURE

1. A digital temperature meter that has been calibrated must be used to get an accurate temperature reading. Use a thermocouple surface temperature probe to measure temperatures.
2. **No pans should be in wells during the pre-heat and temperature check.** Pre-heat the warmer for 30 minutes before taking any temperature readings. Do not take readings unless the cavity has been empty for 30 minutes. This will allow the temperature to stabilize and will prevent false readings.
3. The warmer cavity should be cleaned and empty before the temperature is checked. Avoid any air drafts that might flow through the cavity.
4. Locate the surface temperature probe on the bottom of the first cavity as shown for the cabinet size.
5. All temperature controls exhibit a swing in temperature as the control cycles on and off while regulating to the set point. The correct calibration temperature is the average of several readings taken over a period of 20 minutes after the warmer has been pre-heated. The average temperature should be ± 5°F from the set point.

OPERATING INSTRUCTIONS

This new technology allows you to precisely control the environment in each pan, allowing customized settings for each food product. This gives you the ability to maintain gold standard sensory attributes at drastically extended hold times while delivering hotter food to your customers. To accomplish this, each food product has a tailored HeatSink temperature and InfraRed pulse rate. To ensure optimal hold quality, it is essential to press the up or down arrow corresponding with the pan location to activate a hold cycle. This starts the appropriate IR pulse rate as well as the timer countdown.

OPERATION - OPERATING PROCEDURE

- Ensure proper heat sink covers are inserted into the correct location (broiled and moisture sensitive products only).
- Ensure metal trivets are inserted into the pans for fried products.
- Upon turning ON, allow the holding unit to heat for at least 30 minutes or until the temperature disappears and the timer bars display the pre-programmed product names.
- If the timer bars display “HIGH” or “LOW” at any time after the preheat period, discontinue use of the affected pan location(s) until the holding unit can be serviced.

OPERATION – TIMER BAR FUNCTIONALITY

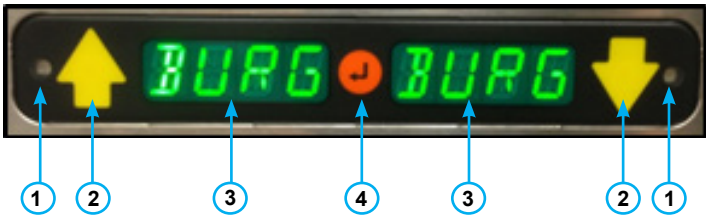

1. Status LEDs: Used for indicating status of pan.
   a. Non-Illuminated - Timer is Inactive – no product in pan
   b. GREEN – Timer is Active – product in pan (use first)
   c. FLASHING GREEN = Cook Warning Time reached (cook more product) or keypad in EDIT MODE (programming)
2. Arrow Buttons
   a. Used for Starting / Stopping / Resetting Timer.
   b. Used to access MENU MODE.
   c. Indicate which pan the adjacent Status LED and Pan Display are linked to.
3. Pan Display
   a. Displays Product Name and Hold Time Remaining (alternates between the two when Timer is active).
4. Enter Button
   a. Used to access MENU MODE.

OPERATION – CHANGE DAYPARTS

Select the appropriate Daypart Button to switch between Breakfast, Lunch, and Dinner menus.

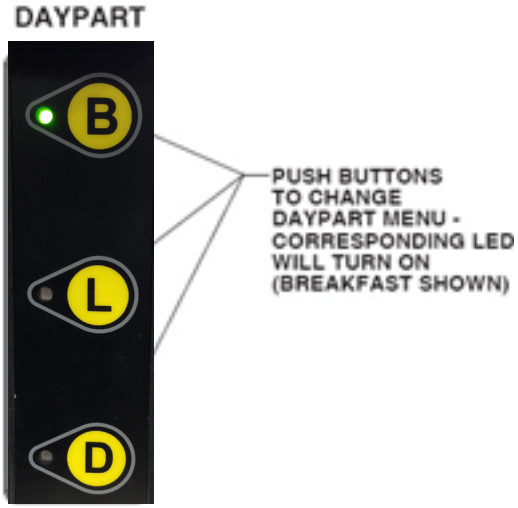

Once to temperature, product names can be viewed on the displays. Additional settings such as LINK, TIME, and TEMP can be viewed two different ways.

- Manually accessing Menu Mode through Timer Bars
- Uploading unit settings from the Duke Holding Unit to a USB Drive and viewing via the Internet.

SETTINGS – CHECKING PRODUCT SETTINGS (MENU MODE)

Enter Menu Mode

1. Press and hold the ENTER Button for three seconds. Status LED FLASHES and “MENU” is displayed on left Display and either “UP” or “DOWN” is displayed on the right display, indicating which pan location information will be displayed.

2. After selecting the UP or DOWN Arrow, press the ENTER Button to accept.

MENU MODE – MANUAL ALTERNATIVE TO CHANGE DAYPART

1. Status LED stops flashing and “MEAL SET1” appears on the Display.

2. Press the ENTER Button again. Status LED FLASHES indicating Edit Mode.

3. Use the Arrow Buttons to scroll to desired Daypart (i.e. “MEAL SET2”, MEAL SET3”) and press the ENTER Button to accept.
4. Status LED stops flashing, “UPDATING” is displayed for a few seconds, and then the desired Daypart (“MEAL SET”) is displayed.

MENU MODE – DISPLAY LINK, HOLD TIME, TEMPERATURE

1. Press the UP Arrow Button repeatedly to scroll up or down through “LINK”, “TIME”, and “TEMP”. The DOWN Arrow button can be used to cycle the opposite direction.

This indicates all products named BURG are linked pan locations.

This indicates the hold time for BURG.

This indicates the Heat Sink Temperature for BURG.

EXIT MENU MODE

1. Press the UP Arrow Button one last time to scroll to “EXIT” and press the ENTER Button to exit Menu Mode.

SETTINGS – CHECKING PRODUCT SETTINGS (VIA USB FILE)

USB File Upload from Unit

1. Turn IRHS ON and wait for temperature or product names to display.
2. Insert a BLANK USB Drive into the USB port. USB Port LED will light solid green and a single chirp should be heard.
3. Display will go blank and USB Port LED will begin flashing green.
4. A second chirp should be heard, USB Port LED will return to solid green.
5. File has successfully uploaded from IRHS to USB Drive.
6. Remove USB Drive from Port.
7. Refer to STEP 2 in the Programming section to view file on the Internet.

PARTS LISTS AND ILLUSTRATIONS

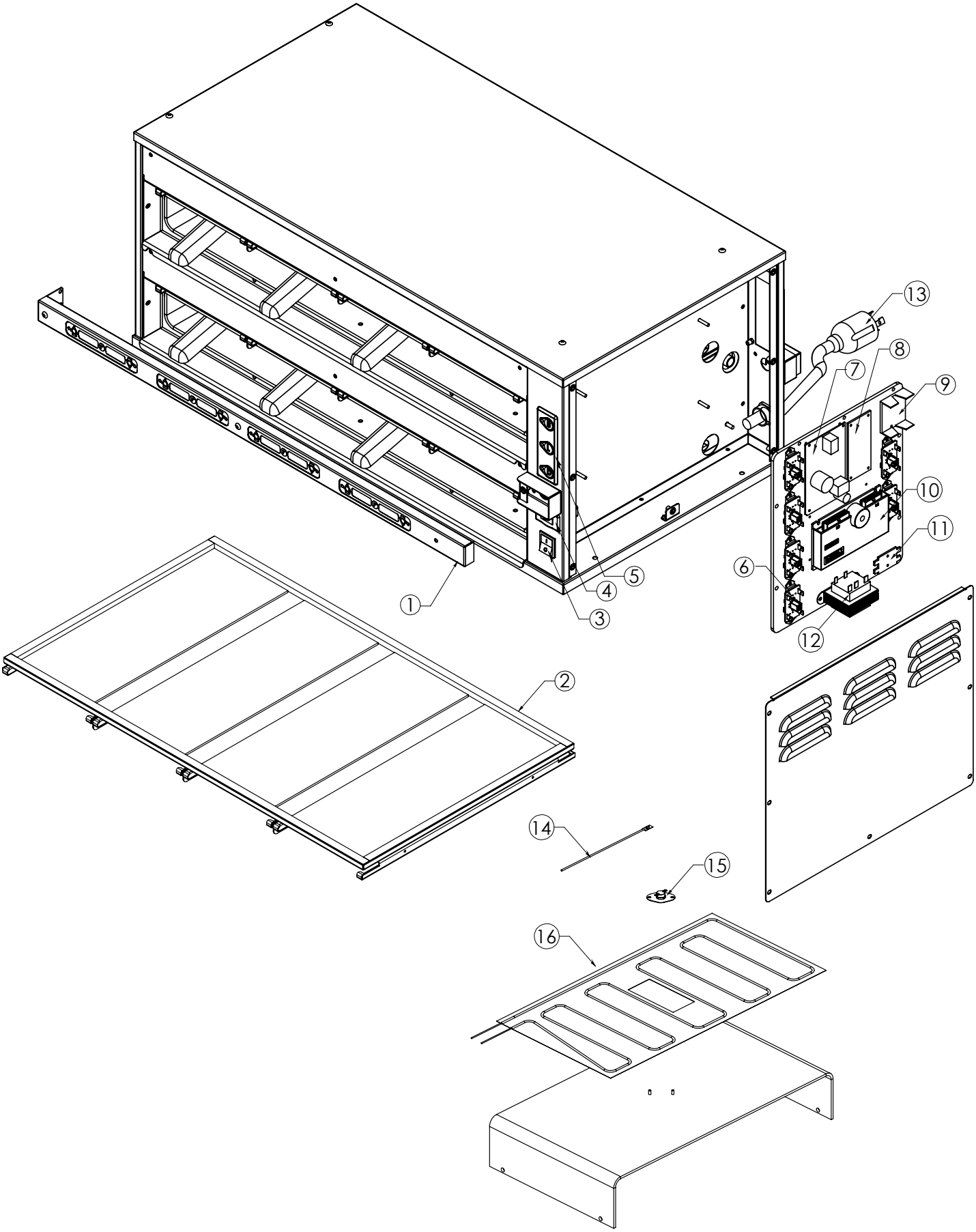

			Qty Per Unit				
Locator	**P/N**	**Description**	**IRHS22**	**IRHS23**	**IRHS24**	**IRHS34**	**IRHS42**
1	1030-2747	TIMER BAR, 2X2 , FRONT, RH AND 4X2, FRONT, BOTTOM	1				1
	1030-2760	TIMER BAR, 2X2, FRONT, LH					
	1030-2759	TIMER BAR, 2X2, REAR, RH AND 4X2, REAR, BOTTOM	1				1
	1030-2761	TIMER BAR, 2X2, REAR, LH					
	1030-2746	TIMER BAR, 2X3, FRONT, RH		1			
	1030-2762	TIMER BAR, 2X3, FRONT, LH					
	1030-2763	TIMER BAR, 2X3, REAR, RH		1			
	1030-2764	TIMER BAR, 2X3, REAR, RH					
	1030-2739	TIMER BAR, 2X4 AND 3X4, FRONT, BOTTOM			1		
	1030-2765	TIMER BAR, 2X4 AND 3X4, REAR, BOTTOM			1		
	1030-2741	TIMER BAR, 3X4, FRONT, TOP				1	
	1030-2745	TIMER BAR, 3X4, REAR, TOP				1	
	1030-2810	TIMER BAR, 4X2, FRONT, TOP					1
	1030-2811	TIMER BAR, 4X2, REAR, TOP					1
2	1030-2550	IR GLASS FRAME - 2 WIDE	2				4
	1030-2549	IR GLASS FRAME - 3 WIDE		2			
	1030-2548	IR GLASS FRAME - 4 WIDE			2	3	
3	169629	POWER SWITCH	1	1	1	1	1
4	156195	USB ADAPTER	1	1	1	1	1
5	157916	DAYPART SWITCH	1	1	1	1	1
6	166081	RELAY	3	4	6	10	6
7	222250	KM MASTER BOARD (IF MASTER UNIT)	1	1	1	1	1
8	158337	RTD BOARD	1	1	1	1	1
9	222252	KM COMMUNICATION BOARD	1	1	1	1	1
10	166080	CONTROL, MAIN	1	1	1	1	1
11	120102	FUSE HOLDER	1	1	1	1	1
12	155749	TRANSFORMER, 208/240 VAC	1	1	1	1	1
	156838	TRANSFORMER, 230 VAC					
13	156624	POWER CORD, NEMA 6-15P	1	1	1		1
	156631	POWER CORD, SHUKO					
	166070	POWER CORD, NEMA 6-20P				1	
	160448	PLUG, PIN & SLEEVE, 16AMP					
14	158279	RTD 1K OHM THIN	2	2	4	6	4
15	158312	THERMOSTAT, AUXILIARY	2	2	2	3	4
16	166004	ELEMENT, 208V, 2 WIDE	2				4
	166005	ELEMENT, 230V/240V, 2 WIDE	2				4
	166007	ELEMENT, 208V, 3 WIDE		2			
	166008	ELEMENT, 230V/240V, 3 WIDE		2			
	166009	ELEMENT, 208V, 4 WIDE			4	6	
	166010	ELEMENT, 230V/240V, 4 WIDE			4	6	
*17	166017	BULB - IR 208V	4	6	8	12	8
	166018	BULB - IR 230V/240V					
*18	120103	FUSE, 12A	2	2	2		2
	166030	FUSE, 16A				2	

*NOT SHOWN

TROUBLE SHOOTING

IRHS Troubleshooting

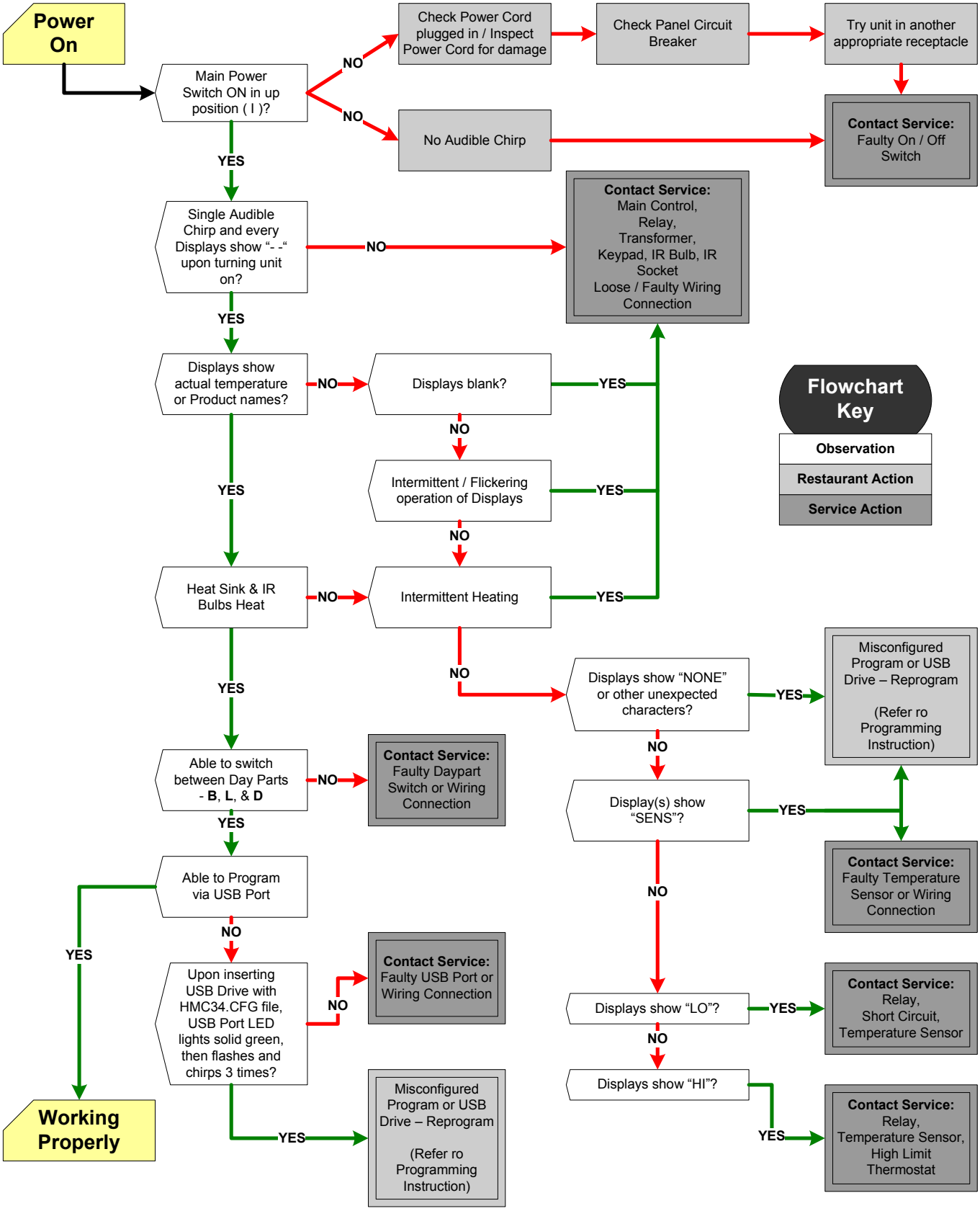

WIRING SCHEMATICS

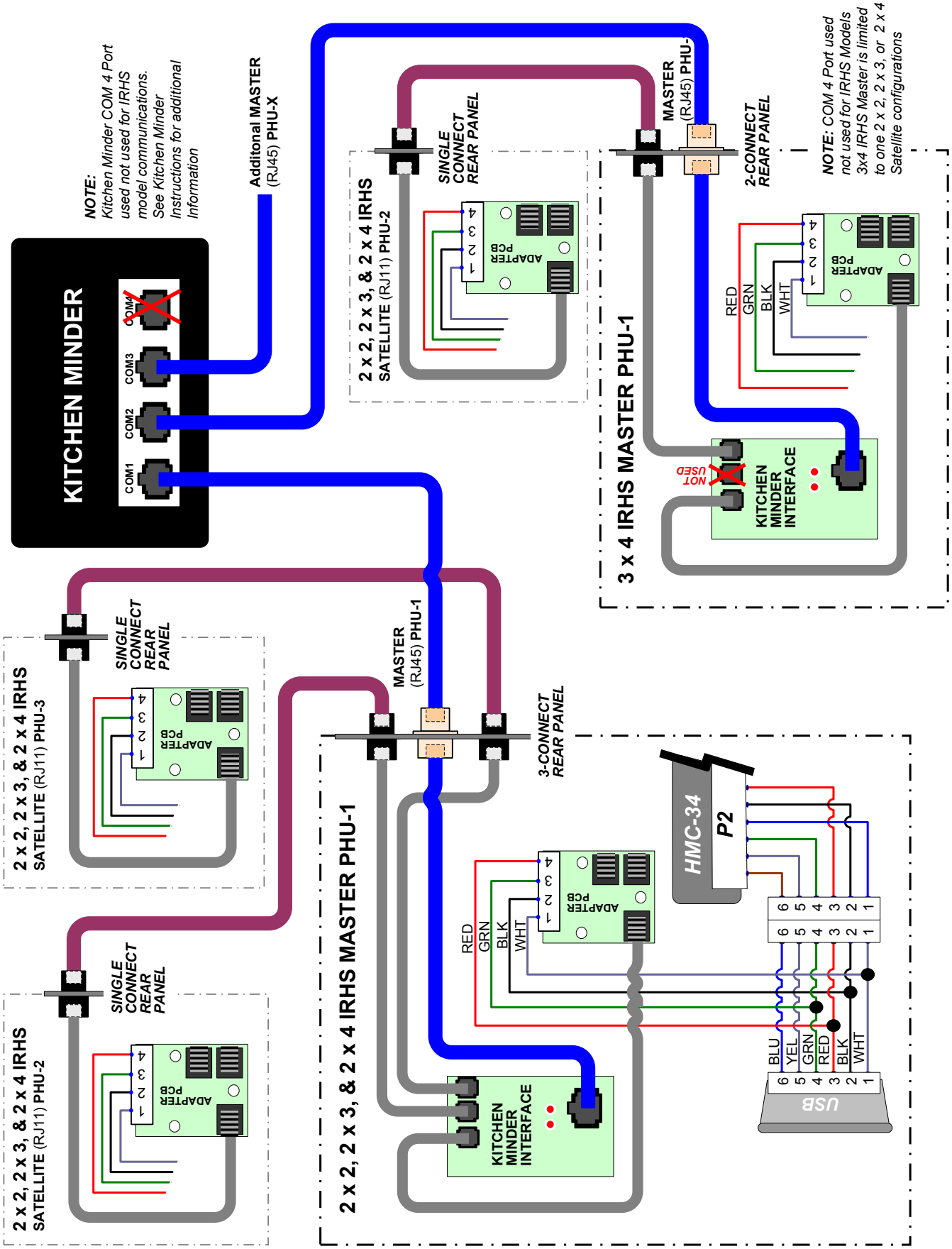

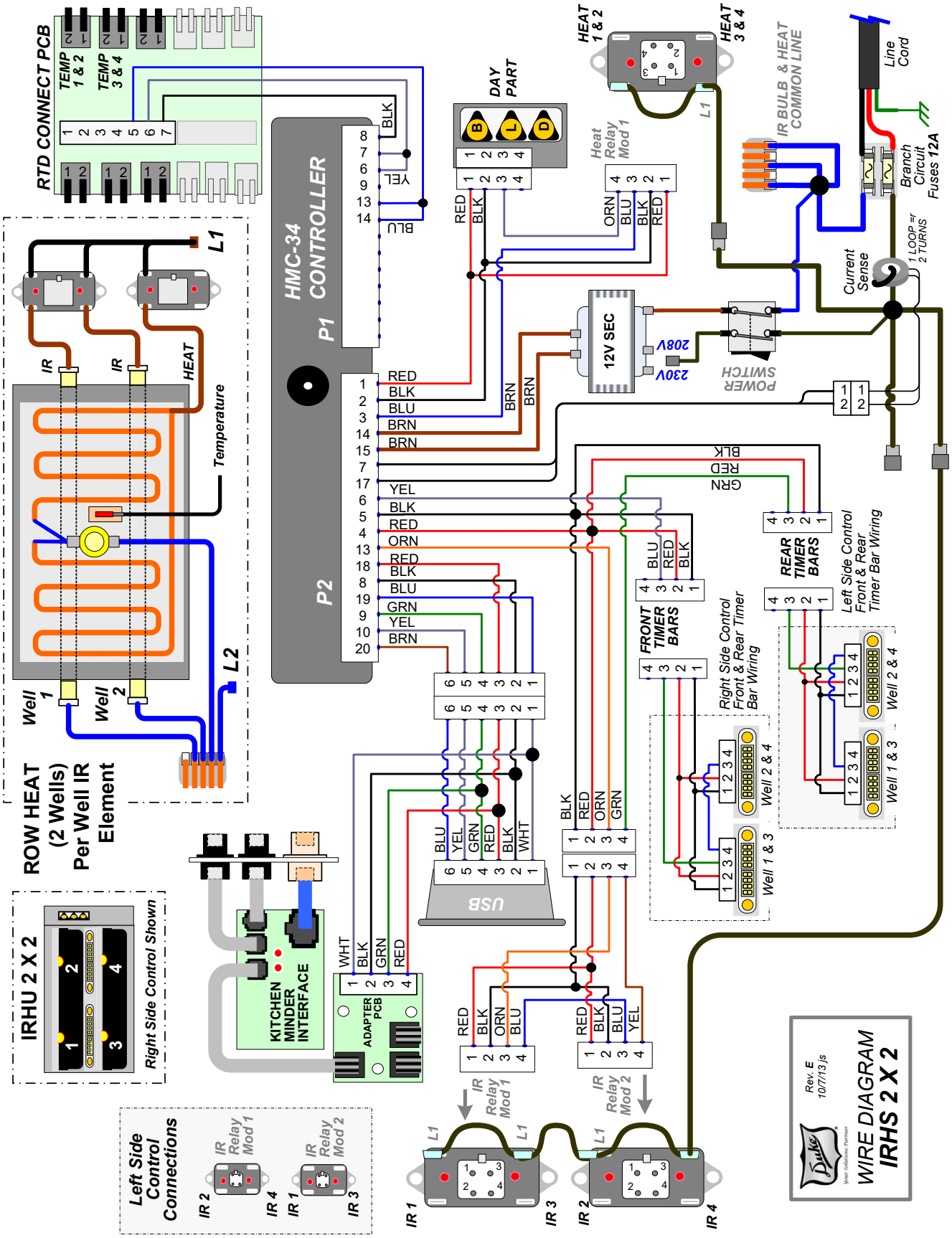
RTD CONNECT PCB
TEMP 1 & 2
TEMP 3 & 4
HMC-34 CONTROLLER
P1
P2
DAY PART
HEAT 1 & 2
HEAT 3 & 4
Heat Relay Mod 1
IR BULB & HEAT COMMON LINE
Line Cord
Branch Circuit Fuses 12A
Current Sense
1 LOOP =r 2 TURNS
12V SEC
208V
230V
POWER SWITCH
L1
L2
IR
HEAT
Temperature
Well 1
Well 2
ROW HEAT (2 Wells) Per Well IR Element
REAR TIMER BARS
FRONT TIMER BARS
Left Side Control Front & Rear Timer Bar Wiring
Right Side Control Front & Rear Timer Bar Wiring
Well 2 & 4
Well 1 & 3
USB
KITCHEN MINDER INTERFACE
ADAPTER PCB
IRHU 2 X 2
Right Side Control Shown
Left Side Control Connections
IR Relay Mod 1
IR Relay Mod 2
IR 1
IR 2
IR 3
IR 4
Rev. E
10/7/13 js
WIRE DIAGRAM
IRHS 2 X 2

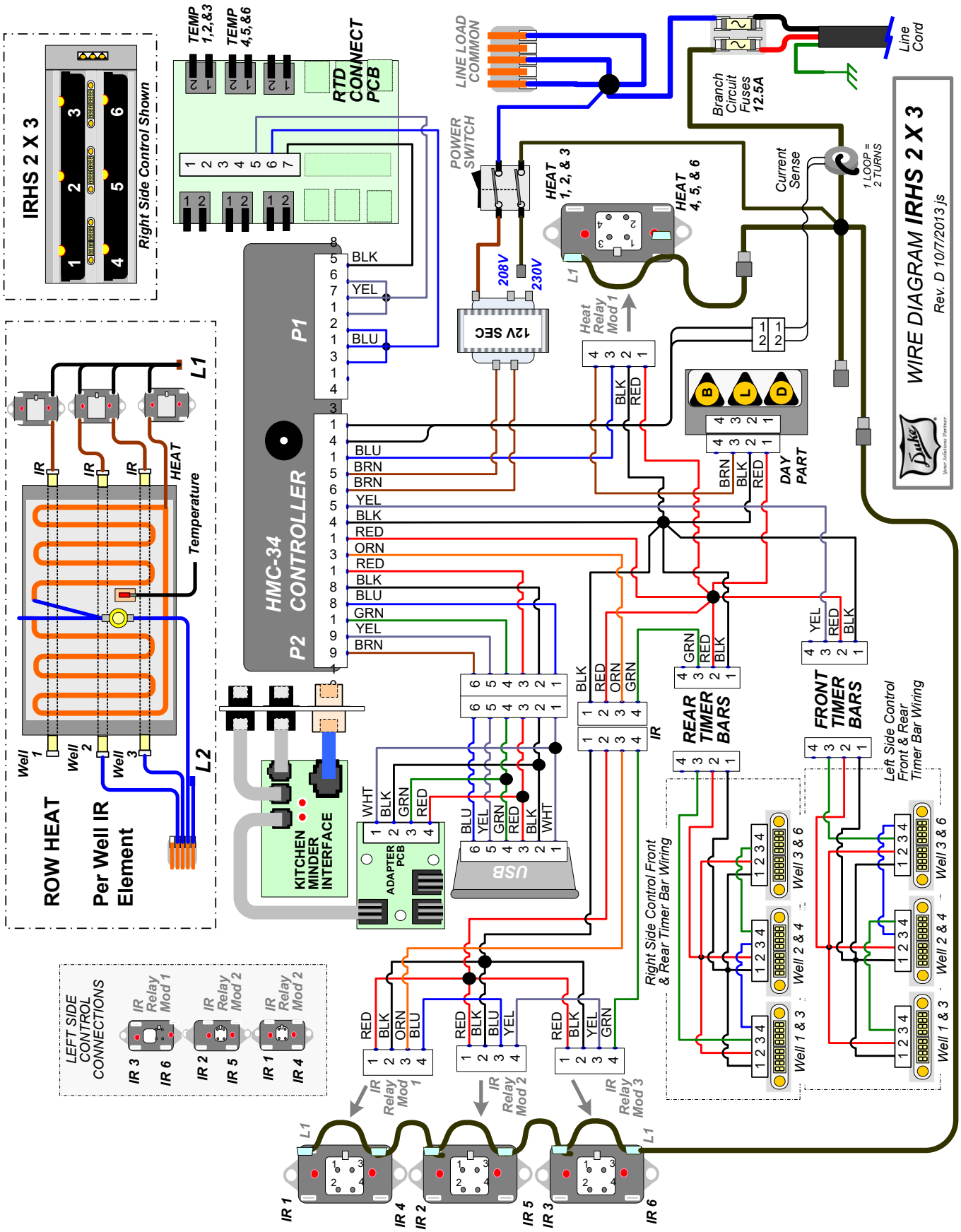
WIRE DIAGRAM IRHS 2 X 3
Rev. D 10/7/2013 js
IRHS 2 X 3
Right Side Control Shown
TEMP 1,2,&3
TEMP 4,5,&6
RTD CONNECT PCB
LINE LOAD COMMON
POWER SWITCH
HEAT 1, 2, & 3
HEAT 4, 5, & 6
208V
230V
12V SEC
Branch Circuit Fuses 12.5A
Line Cord
Current Sense
1 LOOP = 2 TURNS
Heat Relay Mod 1
HMC-34 CONTROLLER
P1
P2
DAY PART
REAR TIMER BARS
FRONT TIMER BARS
Left Side Control Front & Rear Timer Bar Wiring
Right Side Control Front & Rear Timer Bar Wiring
KITCHEN MINDER INTERFACE
ADAPTER PCB
USB
ROW HEAT
Per Well IR Element
Temperature
HEAT
IR
Well 1
Well 2
Well 3
L1
L2
LEFT SIDE CONTROL CONNECTIONS
IR Relay Mod 1
IR Relay Mod 2
IR Relay Mod 3
IR 1
IR 2
IR 3
IR 4
IR 5
IR 6
Well 1 & 3
Well 2 & 4
Well 3 & 6

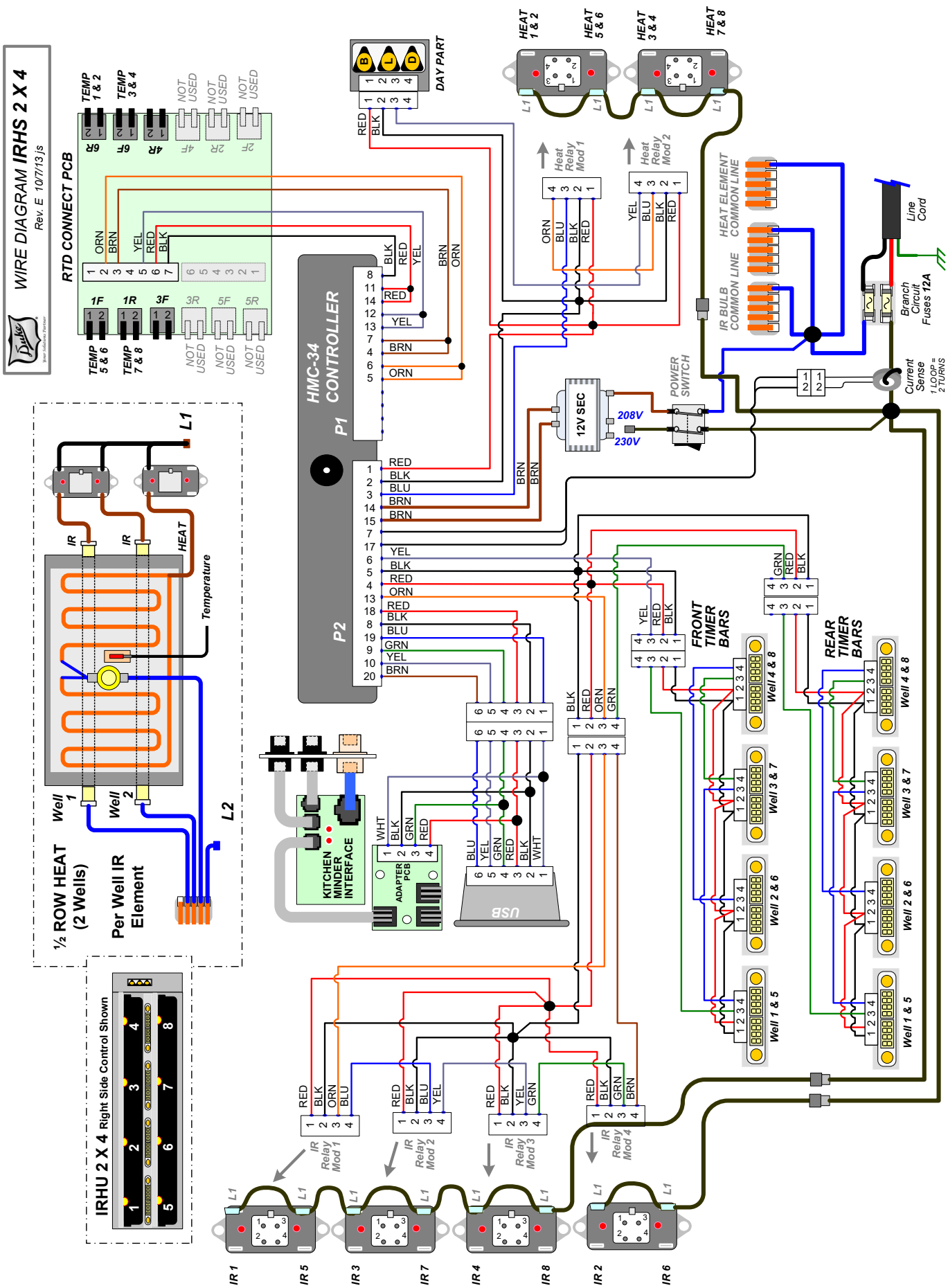
WIRE DIAGRAM IRHS 2 X 4
Rev. E 10/7/13 js
RTD CONNECT PCB
TEMP 1 & 2
TEMP 3 & 4
TEMP 5 & 6
TEMP 7 & 8
NOT USED
DAY PART
HEAT 1 & 2
HEAT 5 & 6
HEAT 3 & 4
HEAT 7 & 8
Heat Relay Mod 1
Heat Relay Mod 2
HMC-34 CONTROLLER
P1
P2
HEAT ELEMENT COMMON LINE
IR BULB COMMON LINE
Line Cord
Branch Circuit Fuses 12A
Current Sense
1 LOOP = 2 TURNS
POWER SWITCH
12V SEC
208V
230V
½ ROW HEAT (2 Wells)
Per Well IR Element
Well 1
Well 2
IR
HEAT
Temperature
L1
L2
KITCHEN MINDER INTERFACE
ADAPTER PCB
USB
FRONT TIMER BARS
REAR TIMER BARS
Well 1 & 5
Well 2 & 6
Well 3 & 7
Well 4 & 8
IRHU 2 X 4 Right Side Control Shown
IR Relay Mod 1
IR Relay Mod 2
IR Relay Mod 3
IR Relay Mod 4
IR 1
IR 5
IR 3
IR 7
IR 4
IR 8
IR 2
IR 6

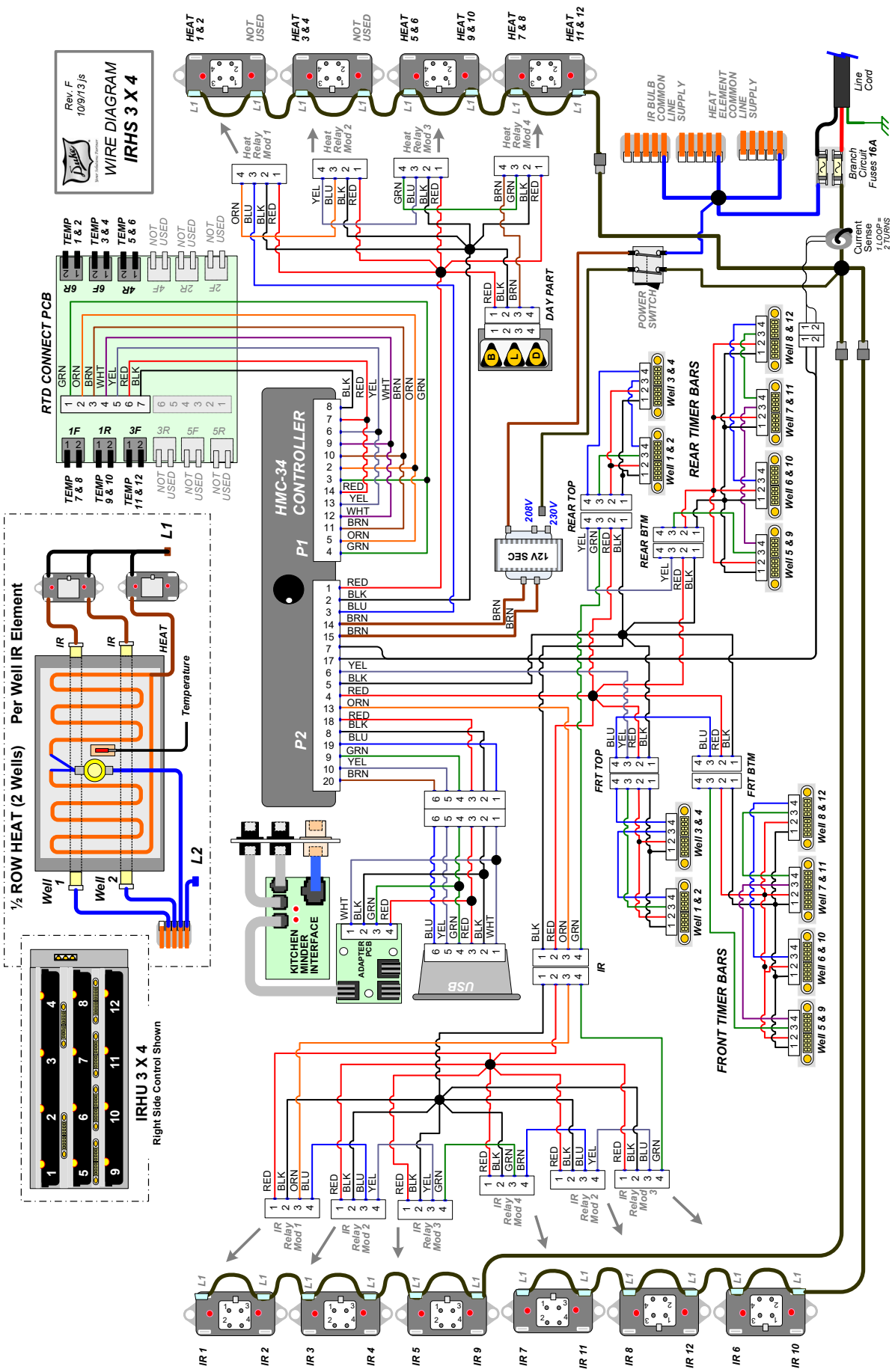
WIRE DIAGRAM
IRHS 3 X 4
Rev. F
10/9/13 js
HEAT 1 & 2
NOT USED
HEAT 3 & 4
NOT USED
HEAT 5 & 6
HEAT 9 & 10
HEAT 7 & 8
HEAT 11 & 12
Heat Relay Mod 1
Heat Relay Mod 2
Heat Relay Mod 3
Heat Relay Mod 4
IR BULB COMMON LINE SUPPLY
HEAT ELEMENT COMMON LINE SUPPLY
Line Cord
Branch Circuit Fuses 16A
Current Sense 1 LOOP = 2 TURNS
POWER SWITCH
DAY PART
RTD CONNECT PCB
TEMP 1 & 2
TEMP 3 & 4
TEMP 5 & 6
TEMP 7 & 8
TEMP 9 & 10
TEMP 11 & 12
HMC-34 CONTROLLER
P1
P2
208V
230V
12V SEC
REAR TOP
REAR BTM
REAR TIMER BARS
Well 1 & 2
Well 3 & 4
Well 5 & 9
Well 6 & 10
Well 7 & 11
Well 8 & 12
FRT TOP
FRT BTM
FRONT TIMER BARS
½ ROW HEAT (2 Wells) Per Well IR Element
Well 1
Well 2
IR
HEAT
Temperature
L1
L2
KITCHEN MINDER INTERFACE
ADAPTER PCB
USB
IRHU 3 X 4
Right Side Control Shown
IR Relay Mod 1
IR Relay Mod 2
IR Relay Mod 3
IR Relay Mod 4
IR 1
IR 2
IR 3
IR 4
IR 5
IR 9
IR 7
IR 11
IR 8
IR 12
IR 6
IR 10

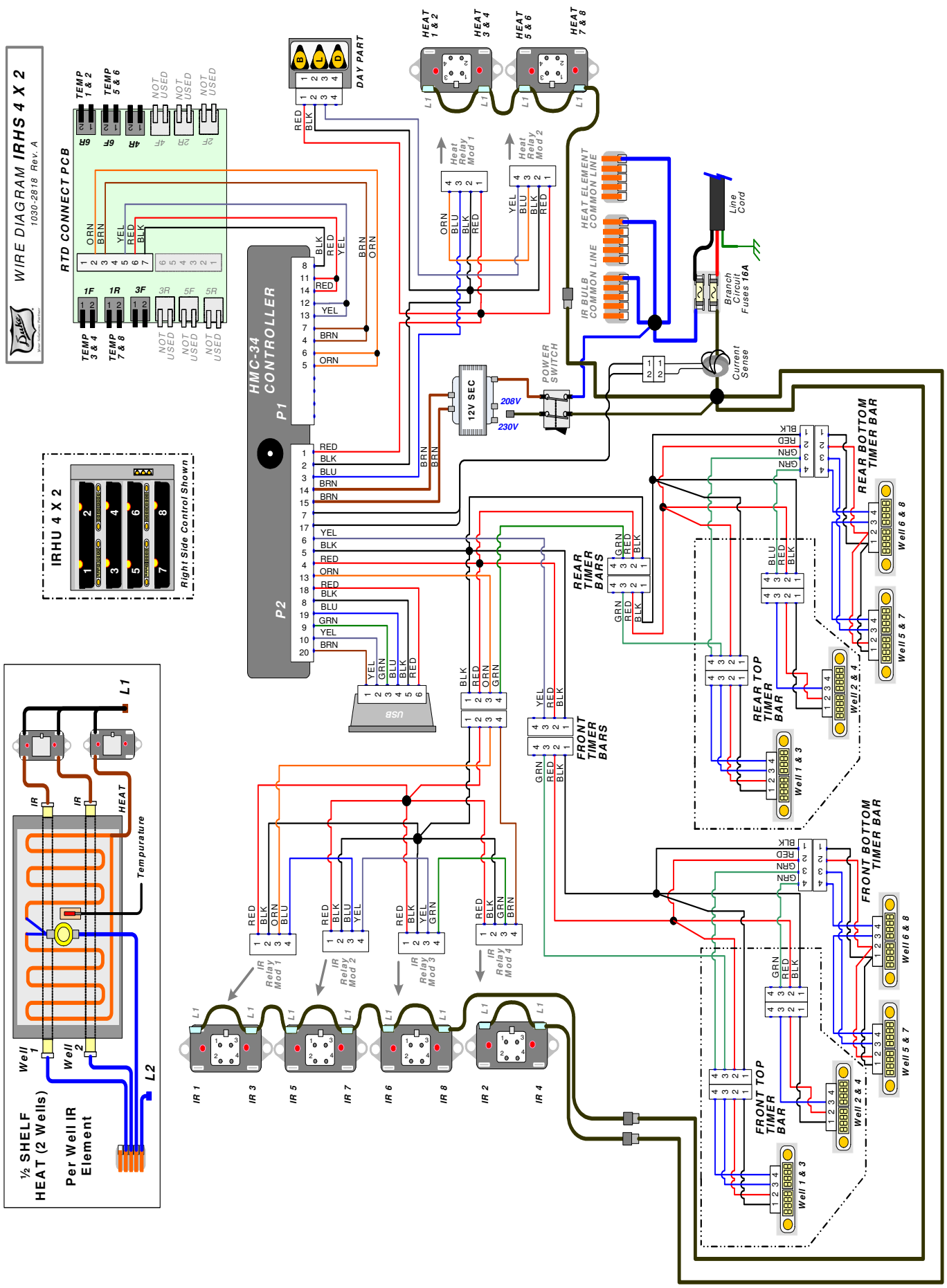
WIRE DIAGRAM IRHS 4 X 2
1030-2818 Rev. A
RTD CONNECT PCB
TEMP 1 & 2
TEMP 5 & 6
TEMP 3 & 4
TEMP 7 & 8
NOT USED
DAY PART
HEAT 1 & 2
HEAT 3 & 4
HEAT 5 & 6
HEAT 7 & 8
Heat Relay Mod 1
Heat Relay Mod 2
HEAT ELEMENT COMMON LINE
IR BULB COMMON LINE
Line Cord
Branch Circuit Fuses 16A
Current Sense
POWER SWITCH
12V SEC
208V
230V
HMC-34 CONTROLLER
P1
P2
USB
IRHU 4 X 2
Right Side Control Shown
REAR TIMER BARS
FRONT TIMER BARS
REAR TOP TIMER BAR
REAR BOTTOM TIMER BAR
FRONT TOP TIMER BAR
FRONT BOTTOM TIMER BAR
Well 1 & 3
Well 2 & 4
Well 5 & 7
Well 6 & 8
IR Relay Mod 1
IR Relay Mod 2
IR Relay Mod 3
IR Relay Mod 4
IR 1
IR 3
IR 5
IR 7
IR 6
IR 8
IR 2
IR 4
½ SHELF HEAT (2 Wells)
Per Well IR Element
Well 1
Well 2
Temperature
L1
L2

Your Solutions Partner

Duke Manufacturing Co.

2305 N. Broadway
St. Louis, MO 63102
Phone: 314-231-1130
Toll Free: 1-800-735-3853
Fax: 314-231-5074

www.dukemfg.com