US 20080302778A1

(19) United States

(12) Patent Application Publication

Veltrop et al.

(10) Pub. No.: US 2008/0302778 A1

(43) Pub. Date: Dec. 11, 2008

(54) **APPARATUS AND METHOD FOR MAINTAINING COOKED FOOD IN A READY-TO-USE CONDITION**

(75) Inventors: **Loren J. Veltrop**, Chicago, IL (US); **Jeffrey Schroeder**, Lake Zurich, IL (US); **Charles Hartfelder**, Carol Stream, IL (US); **Jack Guasta**, Glendale Heights, IL (US)

Correspondence Address:
**MCDONNELL BOEHNEN HULBERT & BERGHOFF LLP**
**300 S. WACKER DRIVE, 32ND FLOOR**
**CHICAGO, IL 60606 (US)**

(73) Assignee: **PRINCE CASTLE, INC.**, Carol Stream, IL (US)

(21) Appl. No.: **11/760,308**

(22) Filed: **Jun. 8, 2007**

**Publication Classification**

(51) **Int. Cl.**
*A47J 39/02* (2006.01)

(52) **U.S. Cl.** ..... **219/385**

(57) **ABSTRACT**

A food warming apparatus includes a heating compartment that can hold one or more trays containing previously cooked food portions. A rack in the heating compartment includes a support member, a channel, and a stop that blocks the front end of the channel. A cover that includes a horizontal section and a vertical section is mounted on the support such that the horizontal section is supported on one side by the support member and on the other side by the vertical section, which is positioned in the channel behind the stop. When a tray is inserted into the receiving space defined by the cover and support member, the cover is lifted up so that the horizontal section rests on the tray and at least partially blocks the open top of the tray, thereby restricting evaporation of liquids from the previously cooked food portions contained in the tray.

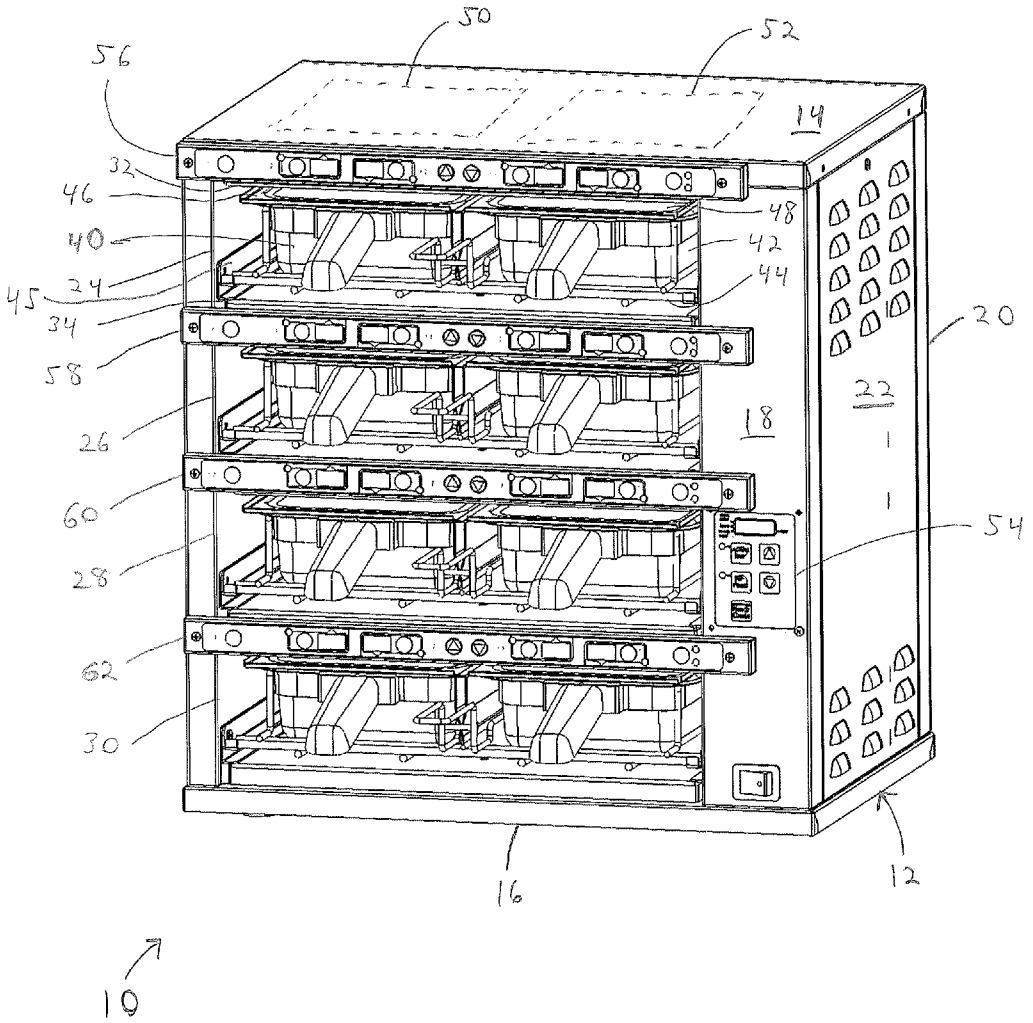




Duke Manufacturing Co. EX1015
U.S. Patent No. 10,512,363

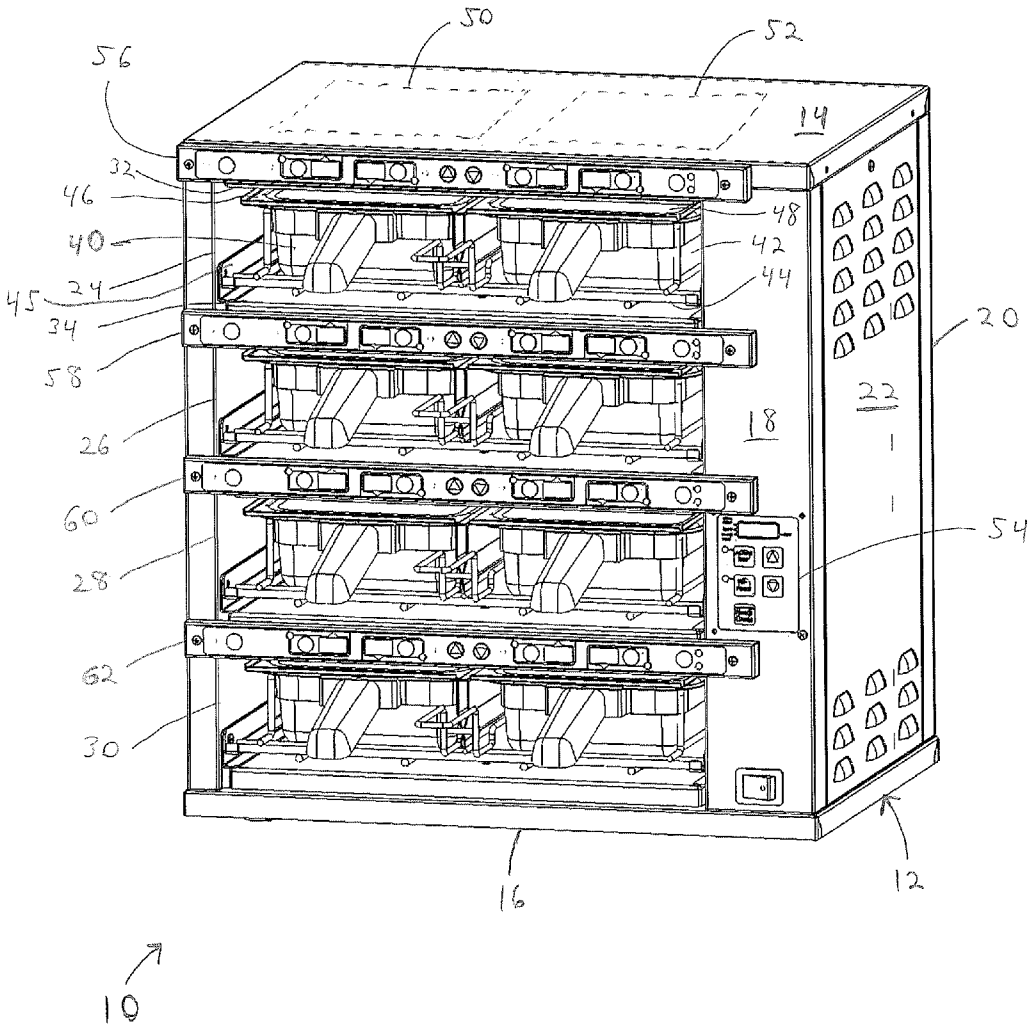
50
52
56
14
32
46
48
40
42
45
24
44
34
20
58
22
26
18
60
54
28
62
30
16
12
10

Figure 1

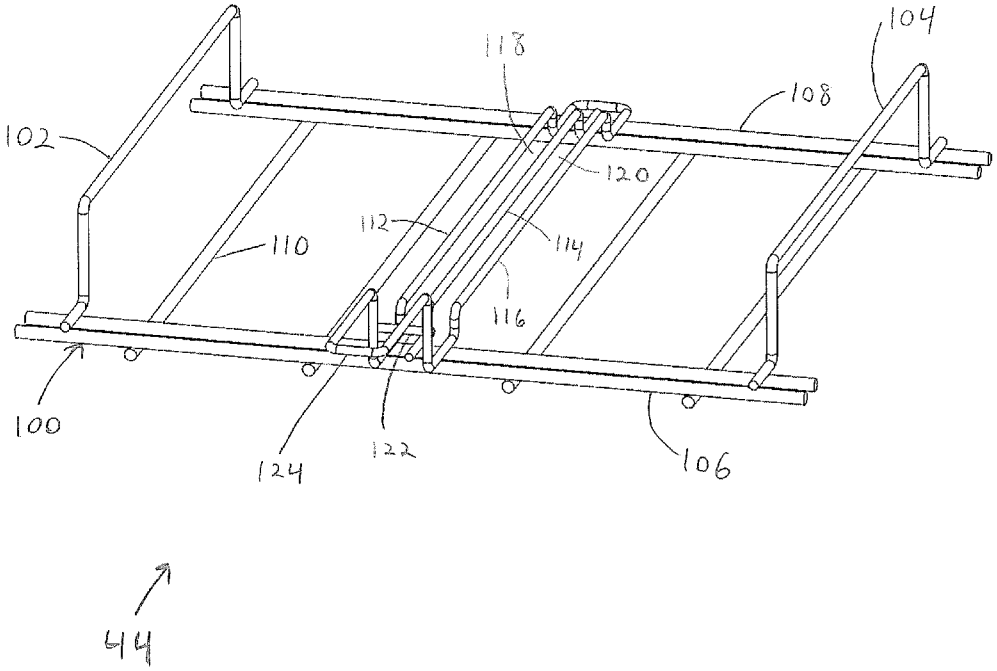


Figure 2

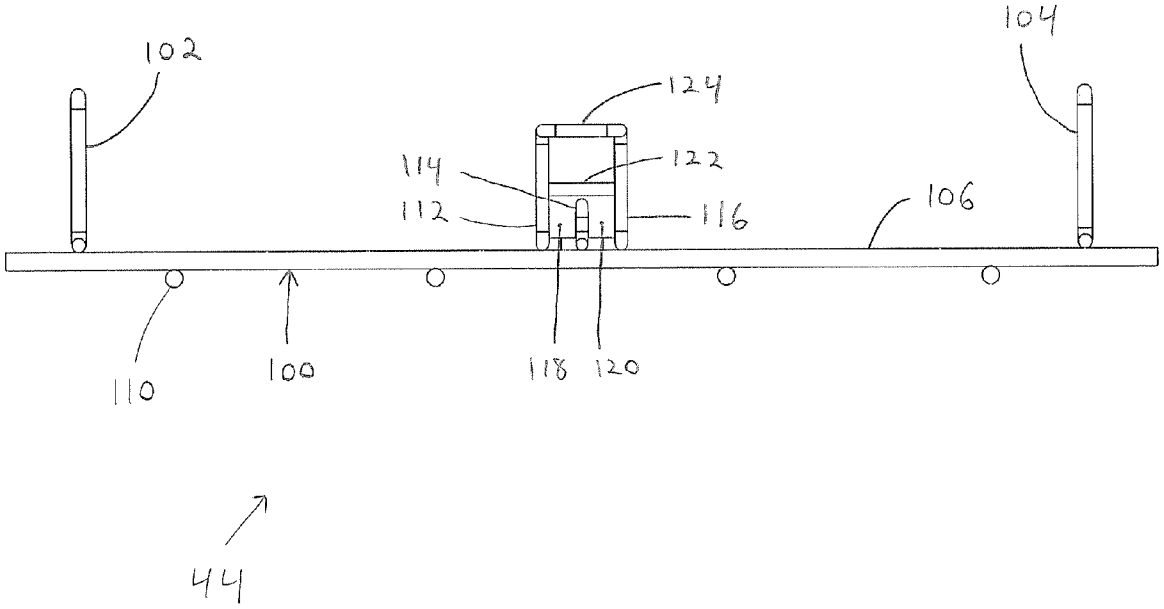


Figure 3

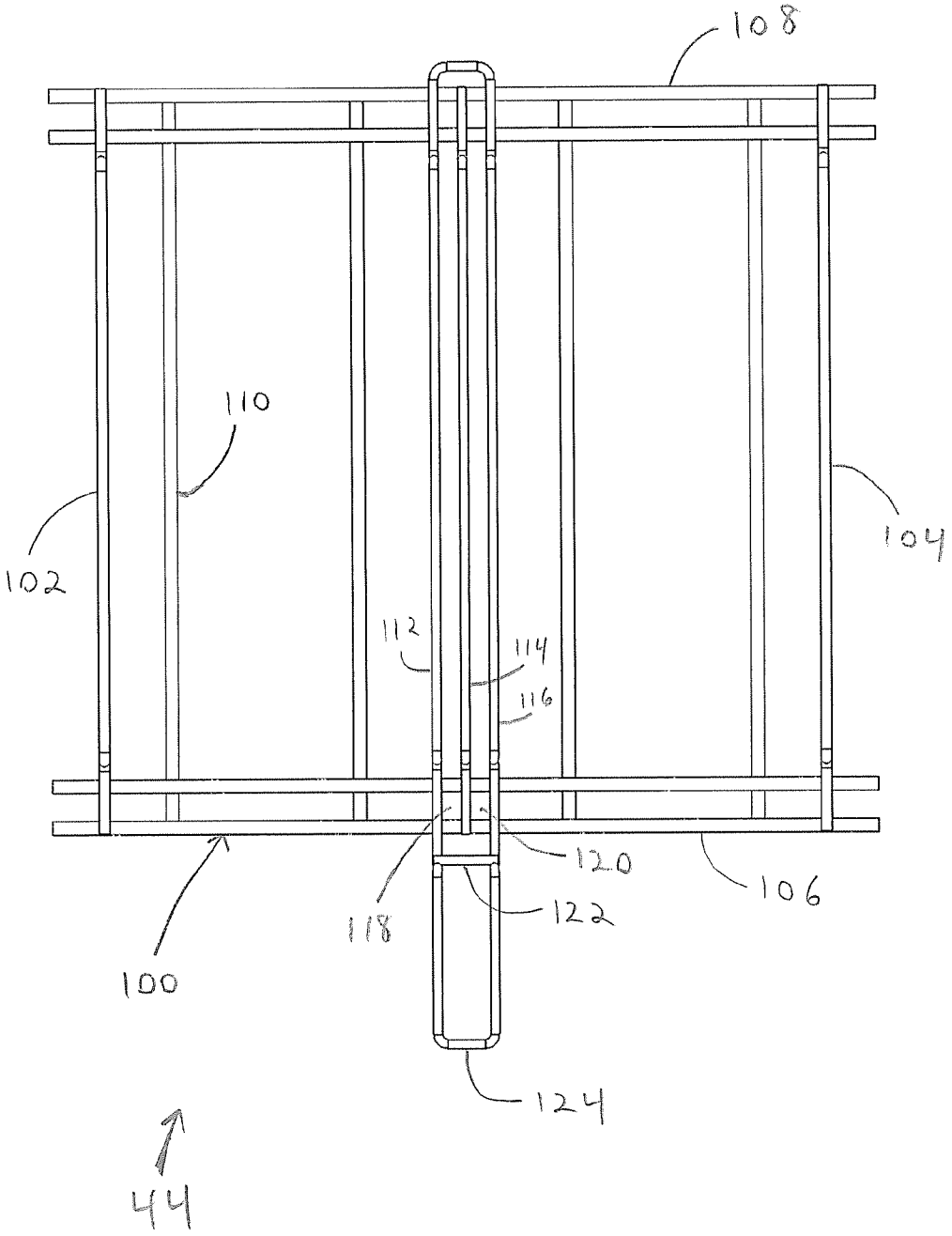


Figure 4

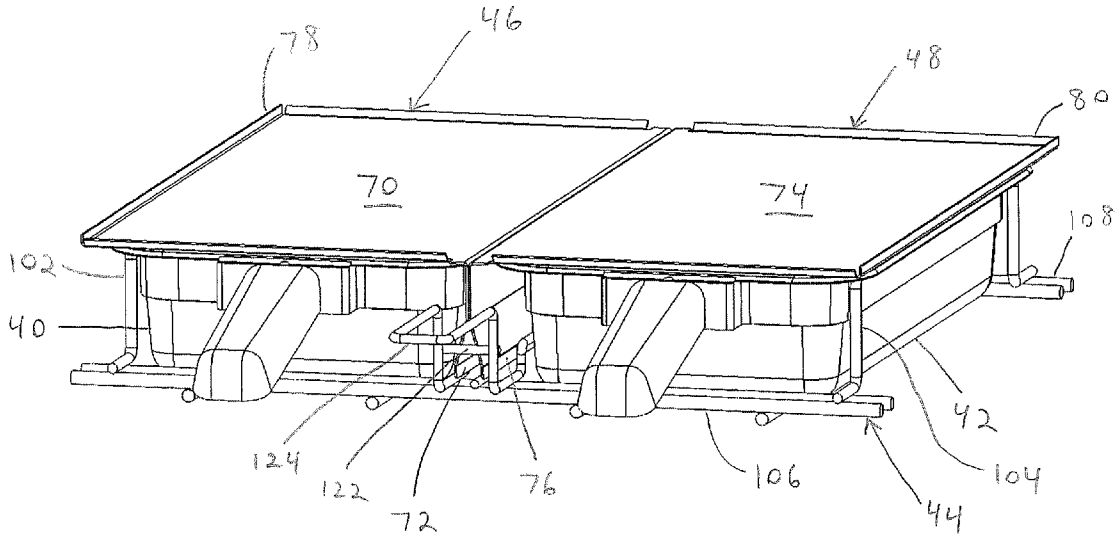


Figure 5

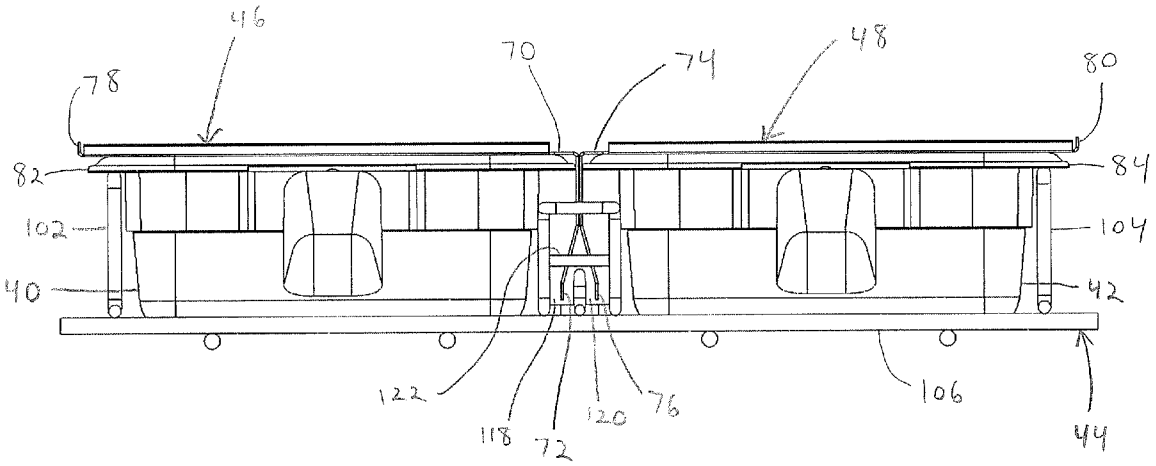


Figure 6

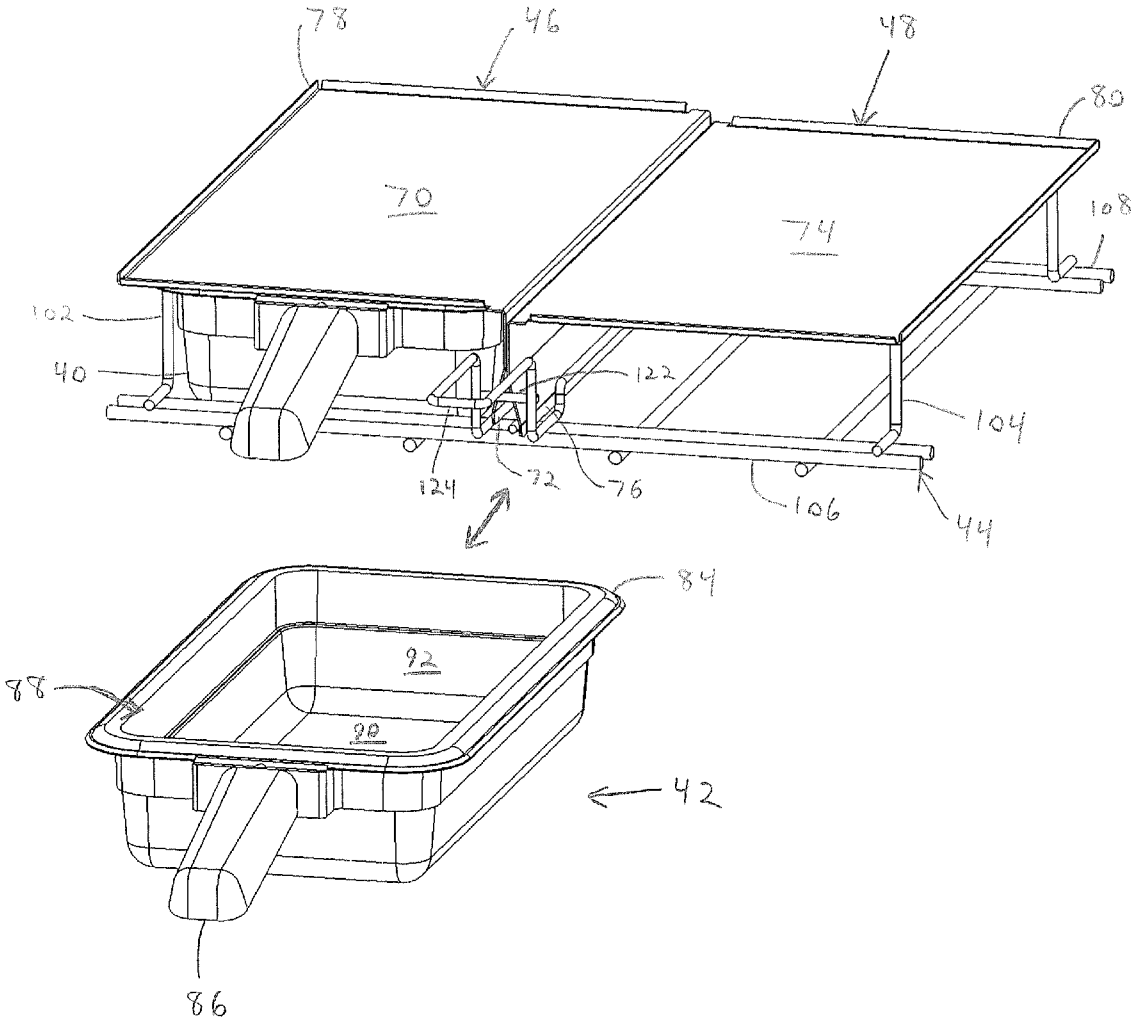
78
46
48
80
70
74
108
102
40
122
104
124
72
76
106
44
84
92
88
90
42
86

Figure 7

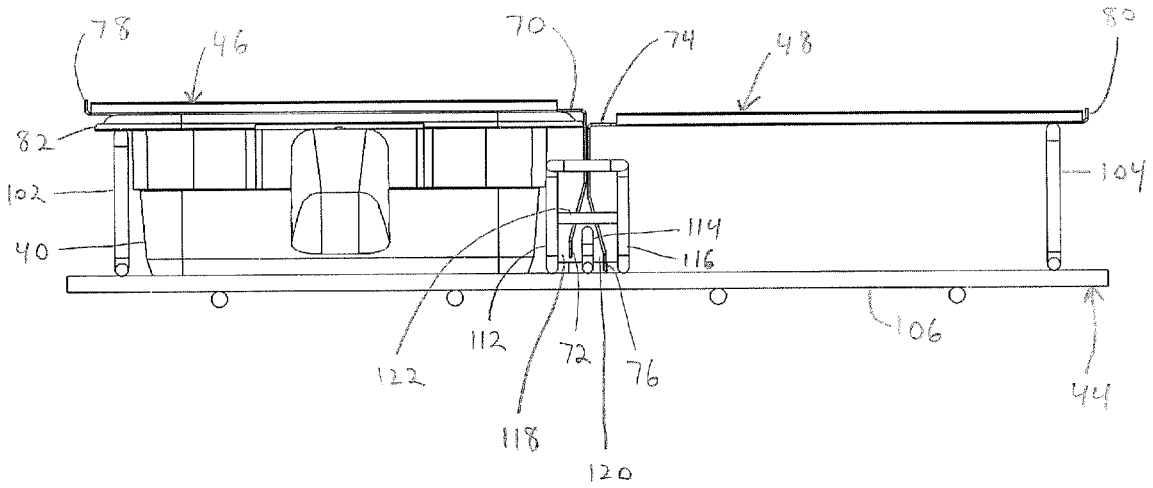


Figure 8

# APPARATUS AND METHOD FOR MAINTAINING COOKED FOOD IN A READY-TO-USE CONDITION

## BACKGROUND OF THE INVENTION

**[0001]** 1. Field of the Invention

**[0002]** This invention relates to the field of food preparation. More particularly, this invention relates to an apparatus and method for maintaining in a ready-to-use condition cooked food portions contained in a food tray, wherein a cover comprising a horizontal section and a vertical section is used to cover the food trays.

**[0003]** 2. Description of Related Art

**[0004]** In many establishments, such as fast food restaurants, certain food items are cooked well in advance of when they are ordered by or served to the customer. Examples of such food items can include sandwich fillings, such as cooked eggs, hamburger patties, breaded foods, such as chicken nuggets, or baked goods, such as muffins. These previously cooked food items are often maintained in a ready-to-use condition until they served to the customer. This typically involves maintaining the previously cooked food items at a serving temperature in the range of from about 140° F. to about 200° F., depending on the food item.

**[0005]** Various food warming apparatus have been developed to maintain previously cooked food items at a desired serving temperature. Such food warming apparatus are sometimes referred to as staging cabinets, holding cabinets, or warming cabinets. One of the challenges associated with food warming apparatus is being able to preserve the flavor, appearance, and texture of the previously cooked food items while they are being maintained at the desired serving temperature. In particular, certain types of food items, such as cooked eggs and hamburger patties have a tendency to dry out undesirably when they are kept warm for extended periods of time.

**[0006]** One commonly used way to protect previously cooked food items for which drying out is a concern, is to place the food items in a container, such as a tray, and to provide a cover for the container. The cover restricts evaporation of moisture from the previously cooked food items. With a reduced amount of moisture vapor being able to escape from the covered container, the previously cooked food items contained therein do not dry out as rapidly.

**[0007]** Conventional covers are inconvenient to use in food fast restaurants and similar establishments. This is because when previously cooked food portions are taken from the food warming apparatus, the cover typically must be removed from the tray to gain access to the food items contained therein, and must be replaced to protect the remaining food portions contained in the tray. The steps of removing and replacing a cover can take an amount of time that is unacceptably large in fast food restaurants. The removed cover can also become misplaced or contaminated and can get in the way of other activities in the kitchen area.

## SUMMARY

**[0008]** In a first principal aspect, an exemplary embodiment provides a food warming apparatus for maintaining previously cooked food portions contained in at least one tray in a ready-to-use condition. The food warming apparatus comprises a cabinet having at least one heating compartment therein. At least one support member is disposed in the at least one heating compartment. At least one cover is removably mounted on the at least one support member. The at least one cover has a horizontal section and a vertical section extending downwardly from the horizontal section. The horizontal section is supported on a first side by the vertical section and is supported on a second side by the at least one support member. The at least one cover and at least one support member cooperatively define at least one receiving space for receiving the at least one tray.

**[0009]** In a second principal aspect, an exemplary embodiment provides a method for covering a tray in a food warming apparatus. The food warming apparatus includes a heating compartment. The tray has a lip defining a tray opening. In accordance with the method, a support that fits into the heating compartment is provided. The support includes a support member. A cover for the tray is provided. The cover has a horizontal section and a vertical section extending downwardly from the horizontal section. The cover is mounted on the support such that the horizontal section is supported on a first side by the vertical section and is supported on a second side by the support member. The support member with the cover mounted thereon is inserted into the heating compartment. The tray is inserted into a receiving space cooperatively defined by the cover and the support until the horizontal section of the cover rests on the lip of the tray and at least partially blocks the tray opening.

## BRIEF DESCRIPTION OF THE DRAWINGS

**[0010]** FIG. **1** is an isometric view of a food warming apparatus, in accordance with an exemplary embodiment.

**[0011]** FIG. **2** is an isometric view of a rack, in accordance with an exemplary embodiment.

**[0012]** FIG. **3** is a front view of the rack of FIG. **2**, in accordance with an exemplary embodiment.

**[0013]** FIG. **4** is a top view of the rack of FIG. **2**, in accordance with an exemplary embodiment.

**[0014]** FIG. **5** is an isometric view of two covers and two trays, in combination with the rack of FIG. **2**, in accordance with an exemplary embodiment.

**[0015]** FIG. **6** is a front view of the combination of FIG. **5**, in accordance with an exemplary embodiment.

**[0016]** FIG. **7** is an isometric view of the combination of FIG. **5**, with one of the trays removed, in accordance with an exemplary embodiment.

**[0017]** FIG. **8** is a front view of the combination of FIG. **5**, with one of the trays removed, in accordance with an exemplary embodiment.

## DETAILED DESCRIPTION

### 1. Overview

**[0018]** A food warming apparatus is able to maintain previously cooked food portions in a ready-to-use condition. The previously cooked food portions may be placed in one or more open-top containers, which are referred to herein as "trays." The trays containing the previously cooked food portions may be placed in one or more heating compartments to maintain the portions at a desired temperature. Covers may cover some or all of the trays in the heating compartments so as to restrict evaporation of moisture or other liquid from the previously cooked food portions.

**[0019]** One or more support members may be placed in the heating compartments to support covers independently of the trays. Thus, a tray may be covered by inserting it into a

heating compartment, in which a cover that is supported by a support member is already in place. In addition, one or more stops may be used to retain the covers in the heating compartments. That way, when a tray is withdrawn from a heating compartment, the cover stays inside the compartment.

**[0020]** The support members and stops for a heating compartment may be part of a unitary support structure, such as a rack. The rack may include a frame and one or more support members that extend upwardly from the frame. The rack may also include channel members that define a channel that can be used to laterally position a cover within the heating compartment. In particular, the cover may have a horizontal section and a vertical section that extends downwardly from the horizontal section. The vertical section may be fitted into the channel so as to laterally position the cover and support one side of the horizontal section of the cover. The other side of the horizontal section may be supported by a support member.

**[0021]** In this arrangement, the cover and support member cooperatively define a receiving space for receiving a tray. Thus, a tray containing previously cooked food portions may be placed in the heating compartment by inserting it in the receiving space. When the tray is fully inserted, the horizontal section of the cover at least partially blocks the open top of the tray, so as to restrict evaporation of liquid from the previously cooked food portions contained in the tray.

**[0022]** In an exemplary embodiment, the insertion of the tray into the receiving space lifts the cover off of the support member so that the cover instead rests on the tray. When the tray is subsequently removed, the cover returns to rest on the support member. The stop may block the front of the channel, so that the cover remains in the compartment when the tray is removed.

**[0023]** Configuring the covers so that they stay in the heating compartment can provide benefits for establishments such as fast food restaurants. In particular, a tray containing previously cooked food portions may be inserted into the heating compartment and covered in one step, and the tray may be withdrawn from the heating compartment and uncovered in one step, thereby saving time. In addition, the inconvenience and the possibilities of contamination associated with direct handling of covers can be reduced.

## 2. Exemplary Food Warming Apparatus

**[0024]** With reference to FIG. **1**, an exemplary food warming apparatus **10** includes a housing or cabinet **12** that has a top **14**, a bottom **16**, a front **18**, a back **20**, and sides **22**. The interior of cabinet **12** is divided into heating compartments **24**, **26**, **28**, and **30**. Although FIG. **1** shows exemplary food warming apparatus **10** with four heating compartments, it is to be understood that a food warming apparatus could be provided with a greater or fewer number of heating compartments.

**[0025]** In the example shown in FIG. **1**, front **18** is open to provide access to compartments **24**, **26**, **28**, and **30**. However, it is to be understood that back **20** could also be open to provide access to compartments **24**, **26**, **28**, and **30**, for example, in a pass-through configuration. Each of compartments **24**, **26**, **28**, and **30** includes an upper compartment surface and a lower compartment surface. Thus, compartment **24** includes upper compartment surface **32** and lower compartment **34**, as shown in FIG. **1**. Compartments **26**, **28**, and **30** may be similarly configured.

**[0026]** Each of compartments **24**, **26**, **28**, and **30** is sized to accommodate one or more trays, as exemplified in FIG. **1** by trays **40** and **42** in compartment **24**. Although FIG. **1** shows two trays in each compartment, it is to be understood that the compartments may be sized to accommodate a greater or fewer number of trays. In addition, although FIG. **1** shows each compartment filled with its maximum number of trays, it is to be understood that a compartment might hold less than the maximum number of trays at any given time.

**[0027]** In each compartment, trays may be supported by a support structure such as a rack. For example, FIG. **1** shows trays **40** and **42** in compartment **24** supported by a rack **44**. The rack may be mounted in the compartment in various ways. For example, a rack could rest on the lower compartment surface. Alternatively, a rack could be supported above the lower compartment surface. In the example illustrated in FIG. **1**, the rack in each compartment is supported above the lower compartment surface by mounting brackets disposed on the side walls of the compartment. Thus, compartment **24** is shown with mounting bracket **45** supporting rack **44**.

**[0028]** Covers may cover some or all of the trays in the compartments. For example, trays **40** and **42** in compartment **24** may be covered by covers **46** and **48**, respectively. The operational relationship between trays **40** and **42**, rack **44**, and covers **44** and **46** is described in more detail below.

**[0029]** Each of compartments **24**, **26**, **28**, and **30** may be heated by a respective heating system. In an exemplary embodiment, each heating system includes one or more resistive heaters for heating its respective compartment from above and/or from below. For example, compartment **24** may be heated through upper compartment surface **32** by heater plates **50** and **52**, which may be positioned over trays **40** and **42**, respectively. Compartment **24** may also be heated through lower compartment surface **34** by similar heater plates. Compartments **26**, **28**, and **30** may be heated in a similar manner.

**[0030]** Food warming apparatus **10** may include various controls for enabling an operator to control its operation and various indicators for displaying information to the operator. Some of the controls and indicators may be arranged in a control panel **54** disposed on front **18**. Other controls and indicators may be arranged in interface bars **56**, **58**, **60**, and **62**, associated with compartments **24**, **26**, **28**, and **30**, respectively.

**[0031]** Control panel **54** may enable the operator to select setpoint temperatures for the compartment (or for specific trays in the compartments). A control system in food warming apparatus **10** may control the heating systems for the compartments (e.g., thermostatically) so as to achieve and maintain the setpoint temperatures. In an exemplary embodiment, the control system may measure the temperature at the heating system (e.g., at heater plate **50** or **52**), so that the setpoint temperature corresponds to the temperature at the heating system. The temperature of the food inside of the covered tray in the compartment may be lower than the setpoint temperature. For example, it may be desirable to maintain previously cooked food portions at a temperature that may range from about 140° F. to about 200° F. To achieve this food temperature, the setpoint temperature may need to be as high as 400° F.

**[0032]** Interface bars **56**, **58**, **60**, and **62** may each enable an operator to select a hold time for the respective compartment (or for a specific tray in the compartment) based, for example, on the particular food product contained in the compartment (or contained in a specific tray in the compartment). The operator may select the hold time by scrolling through a list of food products, each of which has been associated with a

preset hold time. A display on the interface bar may display descriptions of the food products as the operator scrolls through the list and may then display a description of the selected food product.

**[0033]** When the selected food product is placed in the compartment, the operator may interact with the compartment's interface bar to start a timer. When the hold time has been reached, the compartment's interface bar may provide an indication to the operator. The operator may then replace the food product with fresh food product and interact with the interface bar to re-set the timer.

3. Exemplary Rack

**[0034]** FIGS. **2**, **3**, and **4** are isometric, front, and top views, respectively, of rack **44**. In this example, rack **44** includes a frame **100** and support members **102** and **104** extending upwardly from frame **100**. Frame **100** may be mounted in compartment **24** as shown in FIG. **1**, i.e., supported by mounting bracket **45**. Alternatively, frame **100** may rest on lower compartment surface **34**.

**[0035]** The front of frame **100** may be defined by one or more laterally-extending front members **106**, and the back of frame **100** may be defined by one or more laterally-extending back members **108**. Frame **100** may further include a plurality of cross-pieces **110** extending between front members **106** and back members **108**.

**[0036]** In an exemplary embodiment, support members **102** and **104** are brackets that extend between front members **106** and back members **108**. In this configuration, the tops of support members **102** and **104** provide horizontal support edges for supporting horizontal sections of covers **40** and **42**, respectively. The bottoms of support members **102** and **104** are attached to front members **106** and to back members **108**.

**[0037]** Rack **44** may also include channel members **112**, **114**, and **116** extending between front members **106** and back members **108**. Channel members **112** and **114** define a first channel **118**, and channel members **114** and **116** define a second channel **120**. As described in more detail below, first channel **118** receives a vertical section of cover **40**, and second channel **120** receives a vertical section of cover **42**.

**[0038]** Rack **44** may further include a stop **122** that blocks the front ends of channels **118** and **120**. As best shown in FIG. **4**, stop **122** may be provided as a bar that extends between channel members **112** and **116**. A similar stop could also be provided to block the back ends of channels **118** and **120**.

**[0039]** Channel members **112** and **116** may also extend in front of stop **122** to provide a handle **124**. As shown in FIG. **1**, handle **124** may extend out of the open front of compartment **24**.

4. Exemplary Covers

**[0040]** FIGS. **5** and **6** are isometric and front views, respectively, of a combination in which trays **40** and **42** are supported by rack **44** and are covered by covers **46** and **48**, respectively. Cover **46** has a horizontal section **70** and a vertical section **72** attached to and extending downwardly from one side of horizontal section **70**. Cover **48** similarly has a horizontal section **74** and a vertical section **76** attached to and extending downwardly from one side of horizontal section **74**. In an exemplary embodiment, covers **46** and **48** are arranged so that vertical sections **72** and **76** are adjacent, as best shown in FIG. **6**.

**[0041]** Vertical sections **72** and **76** may include a plurality of bends so that they may be fitted into separate channels, e.g., with vertical section **72** in channel **118** and vertical section **76** in channel **120**. When vertical sections **72** and **76** are in channels **118** and **120**, respectively, they are also positioned behind stop **122**.

**[0042]** In an exemplary embodiment, covers **46** and **48** are made out of a sheet material. The sheet material could be a metal, such as stainless steel, aluminum, or titanium, with a thickness ranging from about 0.024 inches to about 0.125 inches, depending on the type of metal. A metal cover could be anodized black or other color based, for example, on desired thermal characteristics. It is to be understood that covers **46** and **48** could also be made out of other materials, such as plastics (e.g., high temperature Nylon, polysulfone, polyimide, polyethersulfone, polyetherimide, or polyphenylene sulfide), depending on the operating temperatures that the covers experience.

**[0043]** To construct a cover out of a sheet material, a generally rectangular piece of the sheet material may be bent to an approximately 90 degree angle so as to define a generally rectangular horizontal section and a generally rectangular vertical section. The vertical section may be further bent inward so that the lower edge of the vertical section is positioned under the horizontal section. The three free edges of the horizontal section may also be bent to provide additional stiffness. For example, horizontal section **70** of cover **46** may include turned-up edges **78** along three sides, and horizontal section **74** of cover **48** may include turned-up edges **80** along three sides, as best shown in FIG. **5**. Preferably, turned-up edges **78** and **80** do not contact upper compartment surface **32** when covers **46** and **48** are in compartment **24**.

**[0044]** In the configuration shown in FIGS. **5** and **6**, covers **46** and **48** are supported by trays **40** and **42**, rather than by rack **44**. In particular, tray **40** includes a lip **82** that extends above support member **102**, and tray **42** includes a lip **84** that extends above support member **104**. As a result, horizontal sections **70** and **74** rest on lips **82** and **84**, respectively, rather than on support members **102** and **104**. In addition, the lower edges of vertical sections **72** and **76** do not reach down to the level of front member **106**, as best shown in FIG. **6**.

**[0045]** However, covers **46** and **48** change position when trays **40** and **42** are removed. For example, FIGS. **7** and **8** illustrate how the position of cover **48** changes when tray **42** is withdrawn from compartment **24**. With tray **42** no longer supporting cover **48**, horizontal section **74** rests on support member **104** and the lower edge of vertical section **76** rests on front member **106**, as best shown in FIG. **8**. Thus, one side of horizontal section **74** is supported by vertical section **76**, and the opposite side of horizontal section **74** is supported by support member **104**.

**[0046]** When tray **42** is withdrawn, cover **48** stays in compartment **24** because of stop **122**. In particular, when tray **42** is pulled forward, cover **48** may be pulled with it. However, the forward motion of cover **48** will be blocked when vertical section **76** in channel **120** reaches stop **122**. In this way, stop **122** retains covers **46** and **48** in compartment **24**.

**[0047]** In the configuration illustrated in FIGS. **7** and **8**, cover **48** and rack **44** cooperatively define a receiving space into which tray **42** can be inserted. The receiving space is defined above by horizontal section **74**, defined below by front member **106** and defined along the sides by channel member **116** and support member **104**. However, the height of tray **42** is greater than the height of the receiving space, i.e.,

the distance between front member **106** and horizontal section **74**. As a result, when tray **42** is inserted into the receiving space, cover **74** is pushed upward, so that horizontal section **74** lifts off of support member **104** and vertical section lifts off of front member **106**. When tray **42** has been fully inserted, horizontal section **74** will again rest on lip **84**, as shown in FIGS. **5** and **6**.

**[0048]** The double-headed arrow in FIG. **7** shows the directions in which tray **42** may be inserted and withdrawn from under cover **48**. Tray **42** may include a handle **86** to facilitate its movement in the directions indicated by the double-headed arrow. Also as shown in FIG. **7**, lip **84** may surround a top opening **88** that provides access to the interior of tray **42**. The interior of tray **42** defines a space that may be used to contain previously cooked food portions. The height of this interior space may be defined by the distance between a generally flat bottom wall **90** of tray **42** and the upper surface of lip **84**. The sides of the interior space may be defined by four side walls **92** that extend between bottom wall **90** and lip **84**.

## 5. Exemplary Method Of Use

**[0049]** When tray **42** contains previously cooked food portions, tray **42** may be inserted under cover **48** in heating compartment **24** of food warming apparatus **10** in order to maintain the previously cooked food portions in a ready-to-use condition. In particular, heating compartment **24** may be heated to maintain the previously cooked food portions at a desired holding temperature, as described above. In addition, horizontal section **74** of cover **48** may, at least partially, block top opening **88** so as to restrict evaporation of liquid from the previously cooked food portions.

**[0050]** Tray **42** may be withdrawn from compartment **24** in order to use one or more of the previously cooked food portions, for example, to prepare a food item ordered by a customer. In particular, withdrawing tray **42** from compartment **24** allows an operator to access the previously cooked food portions through the top opening of tray **42**.

**[0051]** Covers **46** and **48** may be periodically removed from compartment **24**, for example, in order to clean them. To remove covers **46** and **48**, trays **40** and **42** may first be withdrawn from compartment **24**. Then, rack **44** may be pulled out of compartment **24**, e.g., using handle **124**, with covers **46** and **48** still mounted thereon. Once rack **44** has been withdrawn, covers **46** and **48** may be lifted off.

**[0052]** Trays **40** and **42**, rack **44**, and covers **46** and **48** may be assembled in compartment **24** in the following way. First, covers **46** and **48** are mounted on rack **44**. More particularly, cover **46** is mounted by fitting vertical section **72** into channel **118** behind stop **122** so that horizontal section **70** rests on support member **102**. Similarly, cover **48** is mounted by fitting vertical section **76** into channel **120** behind stop **122** so that horizontal section **74** rests on support member **104**.

**[0053]** Once covers **46** and **48** have been mounted in this way, rack **44** may be inserted into compartment **24** through the front opening, e.g., using handle **124**, so that frame **100** is supported by lower compartment surface **34**, by mounting bracket **45**, or in some other way. Trays **40** and **42** may then be inserted into compartment **24** by sliding them over frame member **106**. The insertion of trays **40** and **42** lifts up covers **46** and **48**, as described above, to attain the configuration illustrated in FIGS. **5** and **6**.

## 6. Conclusion

**[0054]** While certain features and embodiments of the present invention have been described in detail herein, it is to be understood that the invention encompasses all modifications and enhancements within the scope and spirit of the following claims.

What is claimed is:

**1**. A food warming apparatus for maintaining previously cooked food portions contained in at least one tray in a ready-to-use condition, said at least one tray having a lip defining a tray opening, said food warming apparatus comprising:

a cabinet having at least one heating compartment therein;

at least one support member disposed in said at least one heating compartment; and

at least one cover removably mounted on said at least one support member, said at least one cover having a horizontal section and a vertical section extending downwardly from said horizontal section, said horizontal section being supported on a first side by said vertical section and being supported on a second side by said at least one support member,

said at least one cover and at least one support member cooperatively defining at least one receiving space for receiving said at least one tray.

**2**. The food warming apparatus of claim **1**, wherein said at least one cover is movable between a first position, in which said horizontal section rests on said at least one support member, and a second position, in which said horizontal section rests on said lip of said at least one tray.

**3**. The food warming apparatus of claim **2**, wherein in said second position, said horizontal section of said at least one cover at least partially blocks said tray opening so as to restrict evaporation of liquid from said previously cooked food portions contained in said at least one tray.

**4**. The food warming apparatus of claim **3**, wherein said at least one cover is configured to move from said first position to said second position when said at least one tray is inserted into said at least one receiving space, and wherein said at least one cover is configured to move from said second position to said first position when said at least one tray is removed.

**5**. The food warming apparatus of claim **4**, further comprising:

at least one stop that retains said at least one cover in said at least one heating compartment when said at least one tray is removed.

**6**. The food warming apparatus of claim **5**, further comprising:

a plurality of channel members defining a channel in which said vertical section is disposed, said channel having a front end and a back end.

**7**. The food warming apparatus of claim **6**, wherein said at least one stop blocks at least said front end of said channel.

**8**. The food warming apparatus of claim **7**, further comprising:

a frame disposed in said at least one heating compartment, said at least one support member extending upwardly from said frame.

**9**. The food warming apparatus of claim **8**, wherein said at least one support member comprises a bracket extending between a front of said frame and a back of said frame.

**10**. The food warming apparatus of claim **1**, wherein said at least one cover comprises a first cover and a second cover, and wherein said at least support member comprises a first support member supporting a first horizontal section of said first cover and a second support member supporting a second horizontal section of said second cover.

**11**. The food warming apparatus of claim **10**, further comprising:

a plurality of channel members defining a first channel and a second channel between said first and second support members, a first vertical section of said first cover being disposed in said first channel and a second vertical section of said second cover being disposed in said second channel.

**12**. The food warming apparatus of claim **1**, wherein said at least one cover is metal.

**13**. The food warming apparatus of claim **1**, further comprising at least one heater plate for heating said at least one heating compartment.

**14**. A method for covering a tray in a food warming apparatus, said food warming apparatus including a heating compartment, said tray having a lip defining a tray opening, said method comprising:

providing a support that fits into said heating compartment, said support including a support member;

providing a cover for said tray, said cover having a horizontal section and a vertical section extending downwardly from said horizontal section;

mounting said cover on said support such that said horizontal section is supported on a first side said by said vertical section and is supported on a second side by said support member;

inserting said support with said cover mounted thereon into said heating compartment; and

inserting said tray into a receiving space cooperatively defined by said cover and said support until said horizontal section of said cover rests on said lip of said tray and at least partially blocks said tray opening.

**15**. The method of claim **14**, wherein said support includes a frame, and wherein inserting said support with said cover mounted thereon into said heating compartment comprises:

mounting said frame in said heating compartment so that said support member extends upwardly from said frame.

**16**. The method of claim **14**, wherein said support defines a channel for receiving said vertical section of said cover, and wherein mounting said cover on said support comprises:

fitting said vertical section into said channel.

**17**. The method of claim **16**, wherein said support includes a stop that blocks at least one end of said channel, and wherein fitting said vertical section into said channel comprises:

positioning said vertical section behind said stop.

**18**. The method of claim **17**, further comprising withdrawing said tray from said heating compartment such that said stop prevents said cover from being withdrawn from said heating compartment as said tray is being withdrawn.

**19**. The method of claim **18**, wherein withdrawing said tray from said heating compartment comprises lowering said horizontal section of said cover onto said support member.

**20**. The method of claim **14**, wherein inserting said tray into a receiving space cooperatively defined by said cover and said support comprises:

lifting said horizontal section of said cover off of said support member.

* * * * *