US010258197B1

(12) **United States Patent**
Fortmann et al.

(10) **Patent No.: US 10,258,197 B1**
(45) **Date of Patent: Apr. 16, 2019**

(54) **MODULAR HOLDING CABINET**

(71) Applicant: **Carter-Hoffmann, LLC**, Mundelein, IL (US)

(72) Inventors: **Robert C. Fortmann**, Grayslake, IL (US); **Frank G. Marolda**, Vernon Hills, IL (US)

(73) Assignee: **Carter-Hoffmann LLC**, Mundelein, IL (US)

(*) Notice: Subject to any disclaimer, the term of this patent is extended or adjusted under 35 U.S.C. 154(b) by 352 days.

(21) Appl. No.: **15/202,775**

(22) Filed: **Jul. 6, 2016**

Related U.S. Application Data

(60) Provisional application No. 62/193,992, filed on Jul. 17, 2015.

(51) **Int. Cl.**
A47J 39/00 (2006.01)
A47B 81/00 (2006.01)

(52) **U.S. Cl.**
CPC ***A47J 39/006*** (2013.01); ***A47B 81/00*** (2013.01); *A47B 2220/0091* (2013.01)

(58) **Field of Classification Search**
CPC A47J 39/006; A47J 39/02; A47J 39/025; A47J 36/06; A47J 36/10; A47J 36/24; A47J 36/2433; A47J 36/2461; A47J 36/2466; A47B 81/00; A47B 2220/0091
See application file for complete search history.

(56) **References Cited**

U.S. PATENT DOCUMENTS

3,868,123 A 2/1975 Berg et al.
4,019,022 A 4/1977 Seider et al.
4,162,024 A 7/1979 Shanley
4,180,125 A 12/1979 Schulz et al.
4,194,109 A 3/1980 Springer
(Continued)

FOREIGN PATENT DOCUMENTS

DE 28 10 685 A1 3/1978
DE 196 38 862 A1 9/1996
(Continued)

OTHER PUBLICATIONS

GEAppliances.com, GE Top-Freezer Refrigerators, Owner's Manual & Installation Instructions, Models 22, 25, 200D2462P001 Rev. 2, 49-60102-2, 02-02 JR, 32 pp.
(Continued)

Primary Examiner — Shawntina T Fuqua
(74) *Attorney, Agent, or Firm* — Brinks Gilson & Lione

(57) **ABSTRACT**

A modular holding cabinet is provided. The cabinet includes a housing defining an internal volume and an open front providing access into the internal volume. The housing supports at least one plate therewithin. The housing supports one or more end walls that are each aligned spaced outboard from an end face of a plate such that an air gap is established therebetween. The internal volume defines a plurality of discrete heating zones located above each of the one or more plates, each discrete heating zone receives heat from a first heater disposed within the respective plate and a plurality of second heaters disposed above the respective plate. The housing includes a plurality of displays and a plurality of inputs, with one of the plurality of displays and one of the plurality of inputs associated with each discrete heating zone.

16 Claims, 12 Drawing Sheets

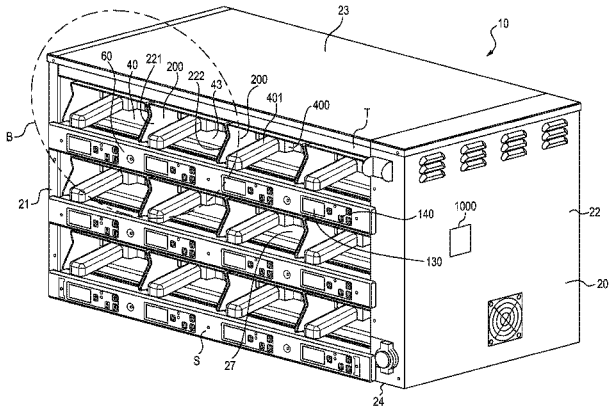

Duke Manufacturing Co. EX1014
U.S. Patent No. 9,976,750

(56) **References Cited**

U.S. PATENT DOCUMENTS

4,225,204	A	9/1980	Bellavoine
4,440,303	A	4/1984	Seager
4,600,255	A	7/1986	Dubarko
4,801,773	A	1/1989	Hanlon
4,821,649	A	4/1989	Andersson
4,969,569	A	11/1990	Anders
5,016,756	A	5/1991	Wischhusen et al.
5,040,856	A	8/1991	Wilkins et al.
5,154,114	A	10/1992	Chang
5,607,213	A	3/1997	Slivon et al.
5,697,500	A	12/1997	Walker
5,782,174	A	7/1998	Cohn et al.
5,783,803	A	7/1998	Robards, Jr.
5,852,967	A	12/1998	Fortmann et al.
5,894,788	A	4/1999	Violi et al.
6,111,224	A	8/2000	Witt
6,116,154	A	9/2000	Vaseloff
6,175,099	B1	1/2001	Shei et al.
6,412,403	B1	7/2002	Veltrop
6,540,098	B1	4/2003	Jarvis et al.
6,637,322	B2	10/2003	Veltrop
6,851,772	B2	2/2005	Tippmann, Sr.
6,878,391	B2	4/2005	Veltrop
6,884,451	B2	4/2005	Veltrop
2002/0094361	A1	7/2002	Veltrop
2002/0100756	A1	8/2002	Veltrop
2002/0102337	A1	8/2002	Veltrop
2009/0199725	A1*	8/2009	Veltrop A47J 37/0623 99/483
2011/0283895	A1*	11/2011	Veltrop A23L 3/005 99/451

FOREIGN PATENT DOCUMENTS

EP	0 776 145	A1	11/1995
JP	53-18621		5/1978
JP	61023685	U	2/1986
JP	5-28462		7/1993
JP	6209865	A	8/1994
JP	7103642	A	4/1995
JP	10288455	A	10/1998
WO	WO 00/57709		10/2000

OTHER PUBLICATIONS

Installation Instructions, 30" Built-In Trivection™ Wall Oven, JT930, JT980, ZET3038, ZET3058, 31-10663, 1-07 JR, 16 pp.

Gold Medal Funfood Equipment & Supplies, Cincinnati, OH 45241-4807 USA, Pizza Oven/Warmer Combo Instruction Manual, Model #5591, Part No. 42873, Revised Feb. 1998, 14 pp.

* cited by examiner

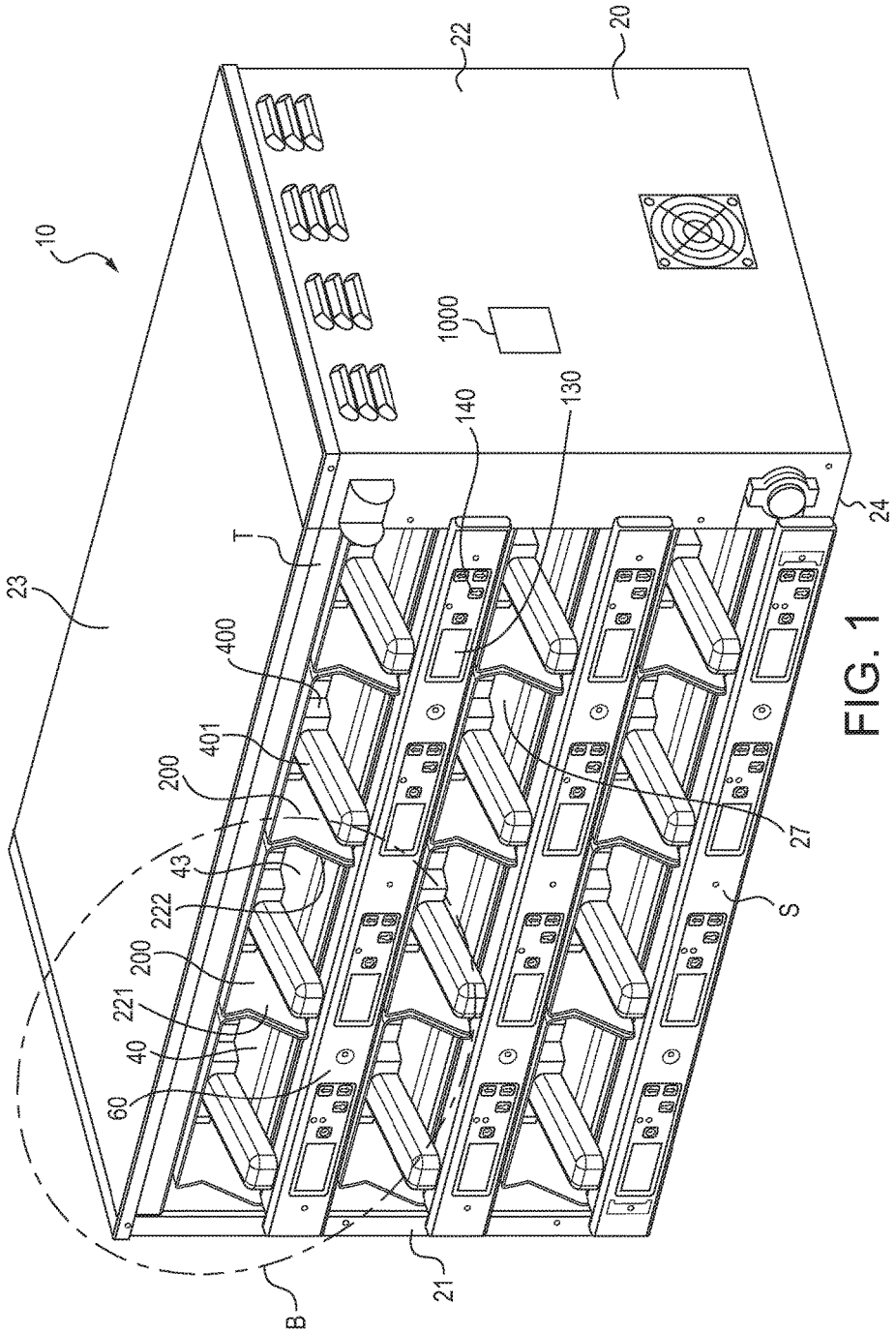
10
23
T
400
401
200
43
222
200
221
40
60
B
21
140
130
1000
22
20
24
27
S

FIG. 1

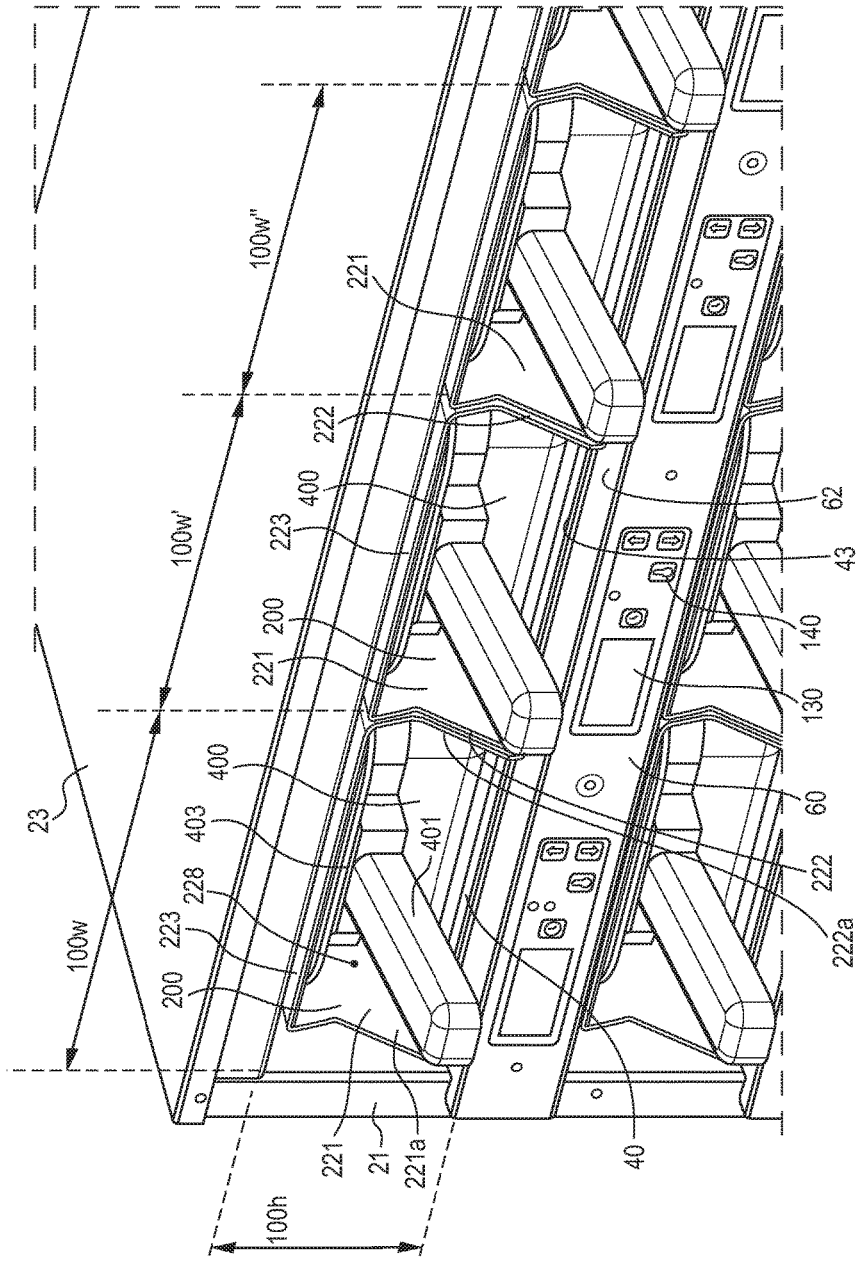
100w"
100w'
100w
100h
23
221
222
400
223
200
221
400
403
401
228
223
200
221
21
221a
40
62
43
140
130
60
222
222a

FIG. 2

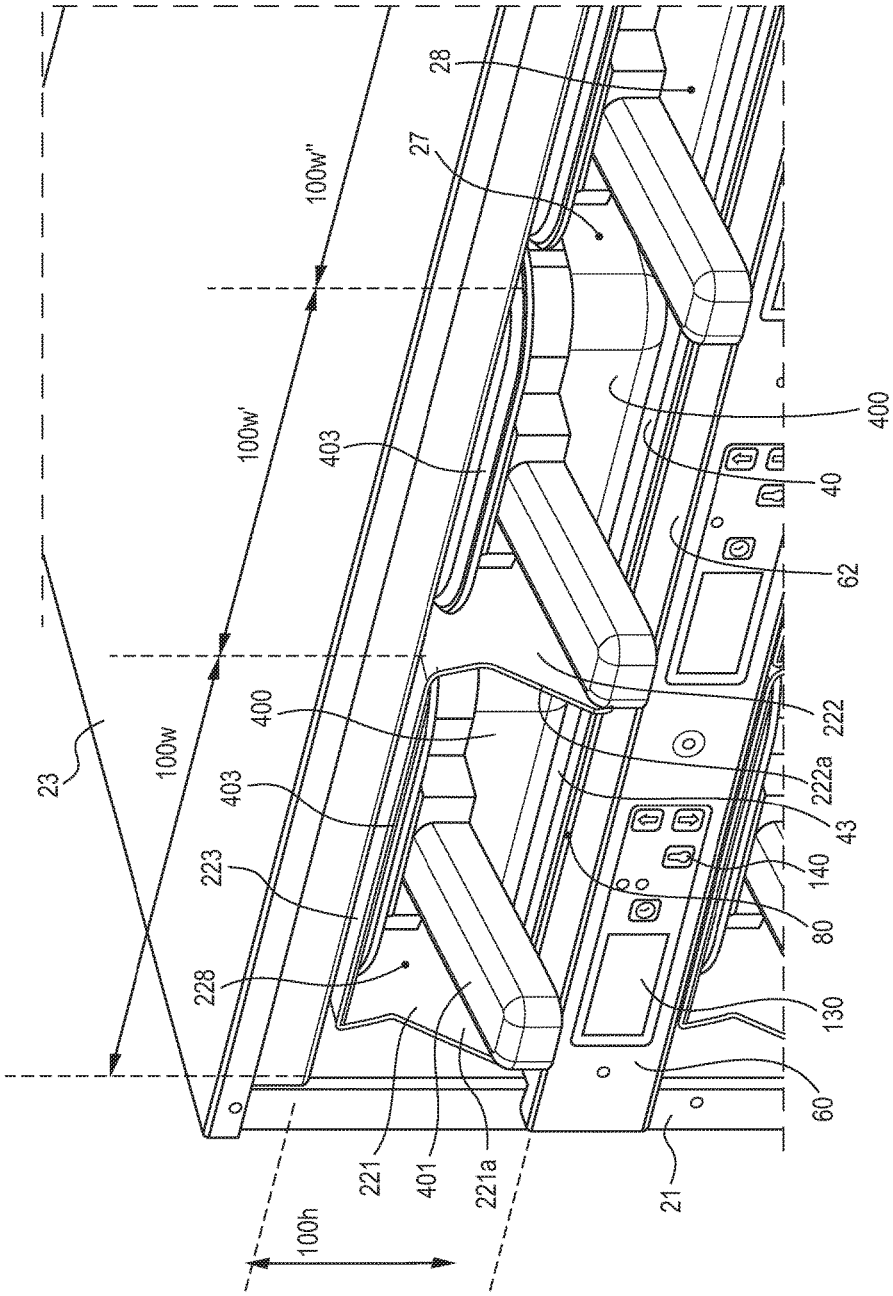
28
27
100w"
100w'
100w
23
403
400
40
62
222
222a
43
140
80
130
60
21
400
403
223
228
221
401
221a
100h

FIG. 3

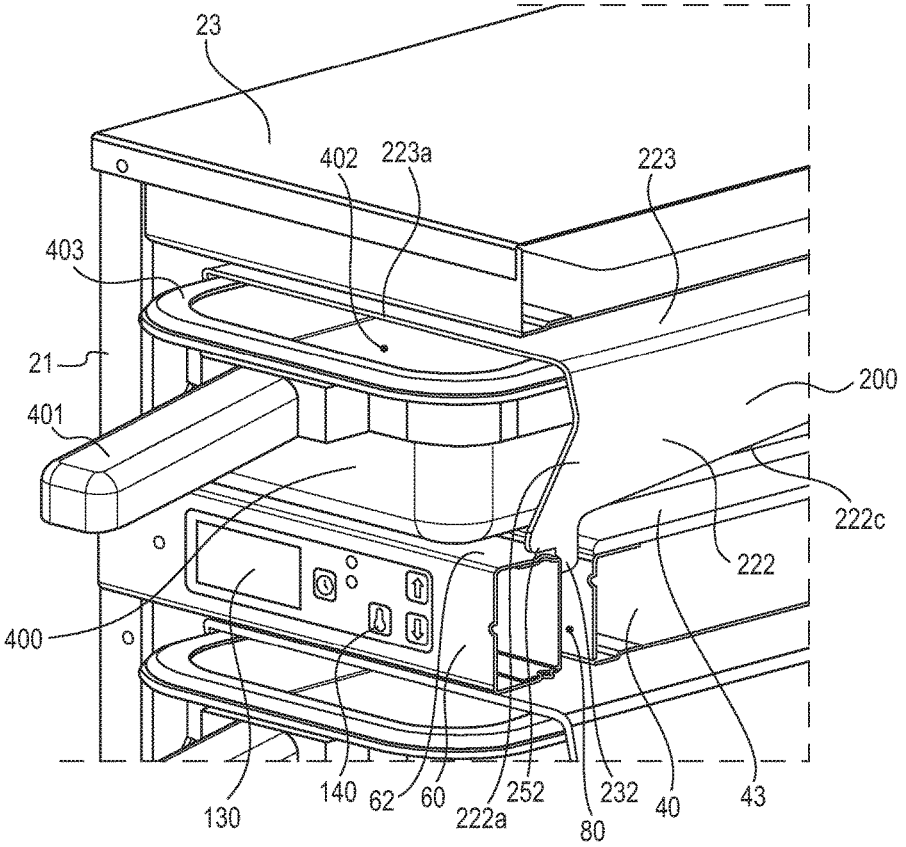
23
402
223a
223
403
21
401
200
222c
222
400
130
140
62
60
222a
252
80
232
40
43

FIG. 4

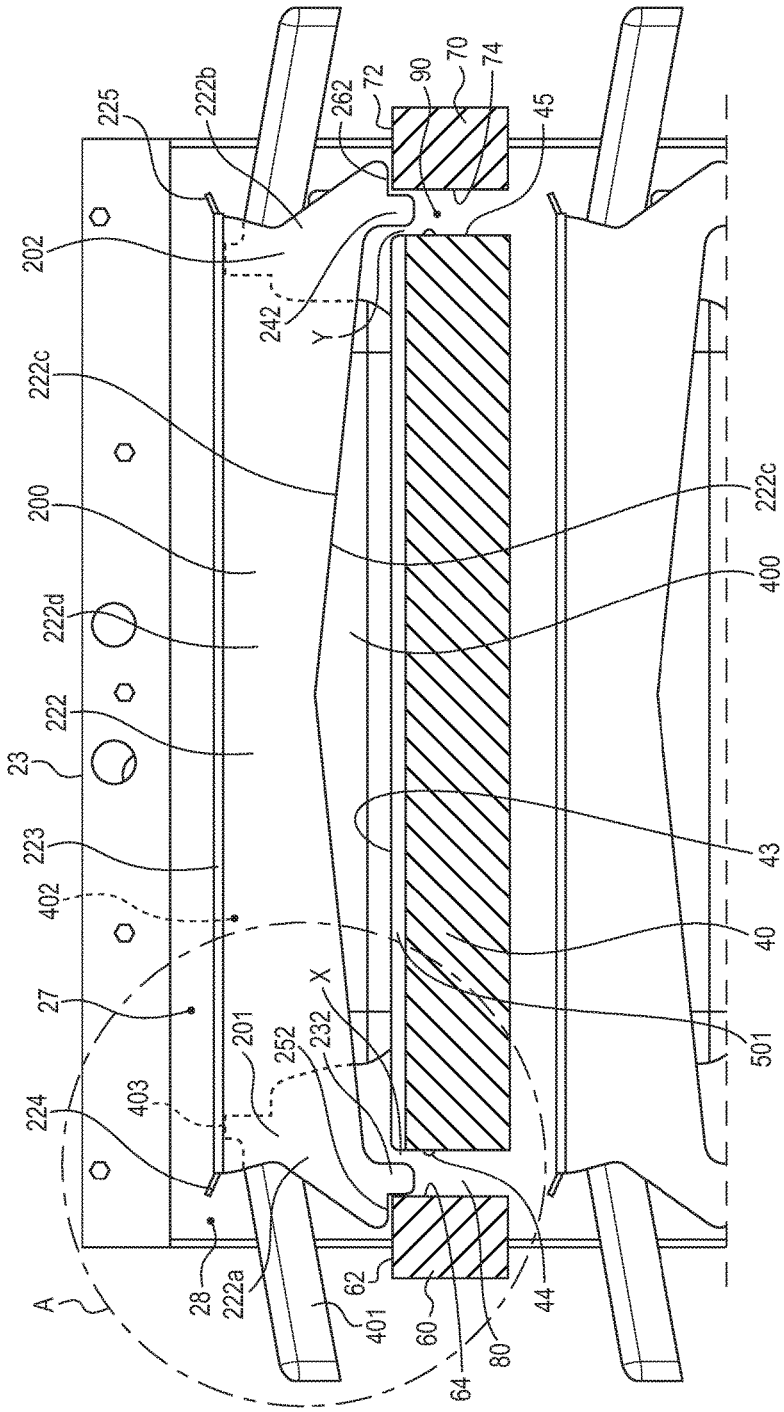
225
222b
262
72
90
70
74
45
202
242
Y
222c
200
222d
222
23
223
402
27
224
403
201
252
232
X
A
28
222a
62
401
60
64
80
44
43
40
501
400
222c

FIG. 5

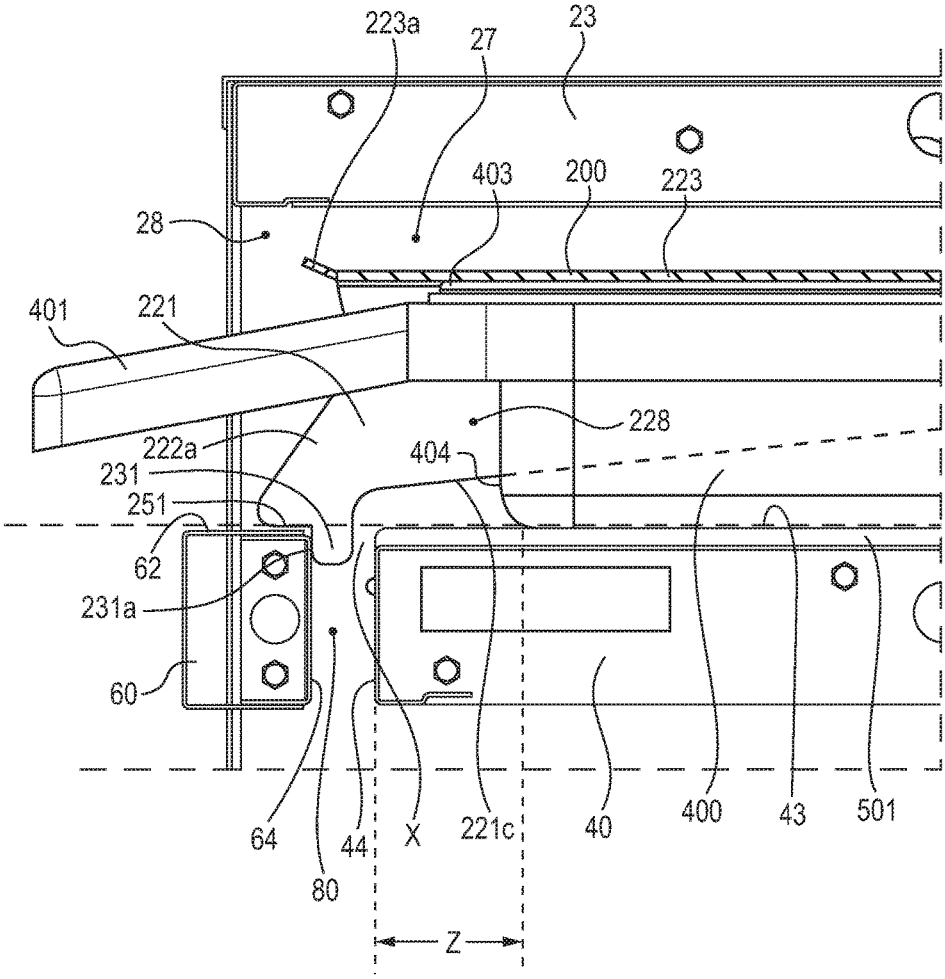
223a
27
23
403
200
223
28
401
221
228
222a
404
231
251
62
231a
60
64
80
44
X
221c
40
400
43
501
Z

FIG. 5a

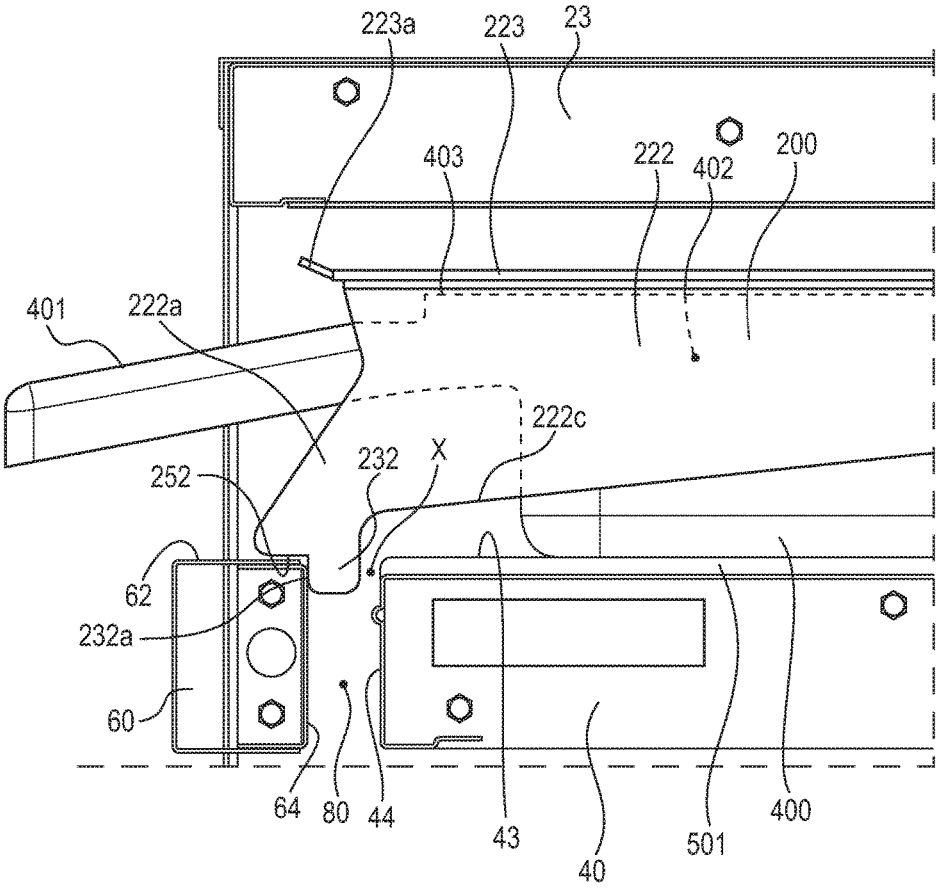
223a
223
23
403
222
402
200
401
222a
222c
232
X
252
62
232a
60
64
80
44
43
40
501
400

FIG. 5b

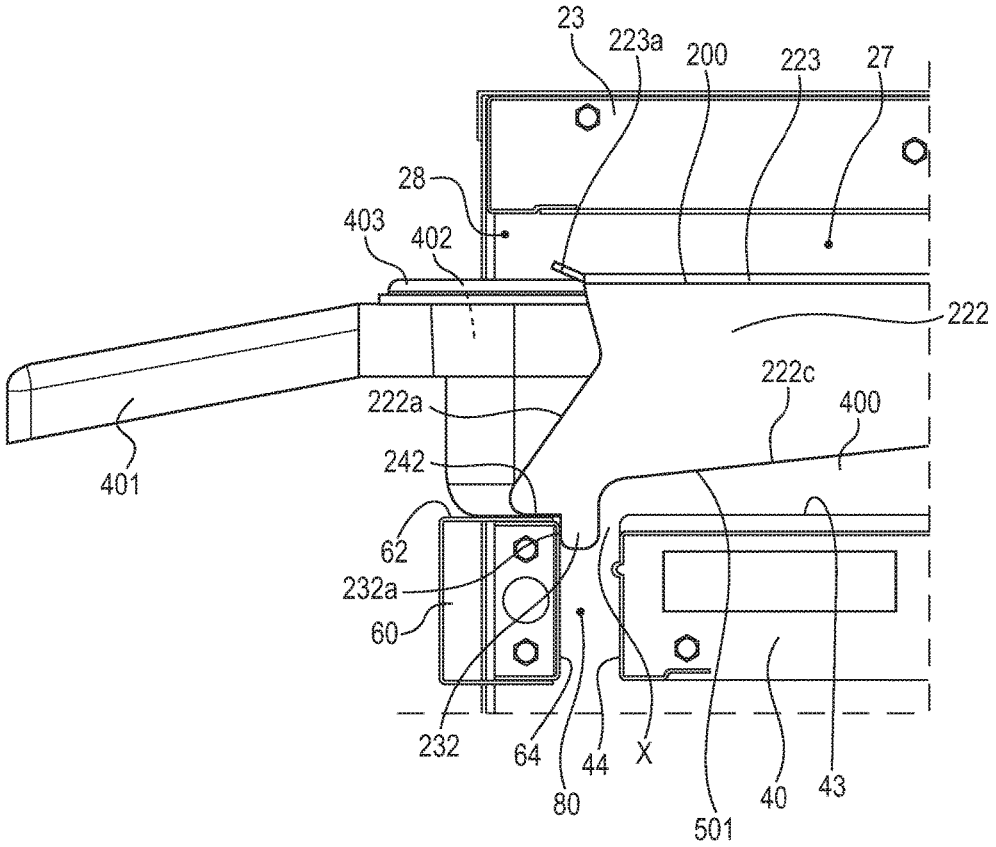
23
223a
200
223
27
28
403
402
222
222c
400
222a
242
401
62
232a
60
232
64
80
44
X
501
40
43

FIG. 6

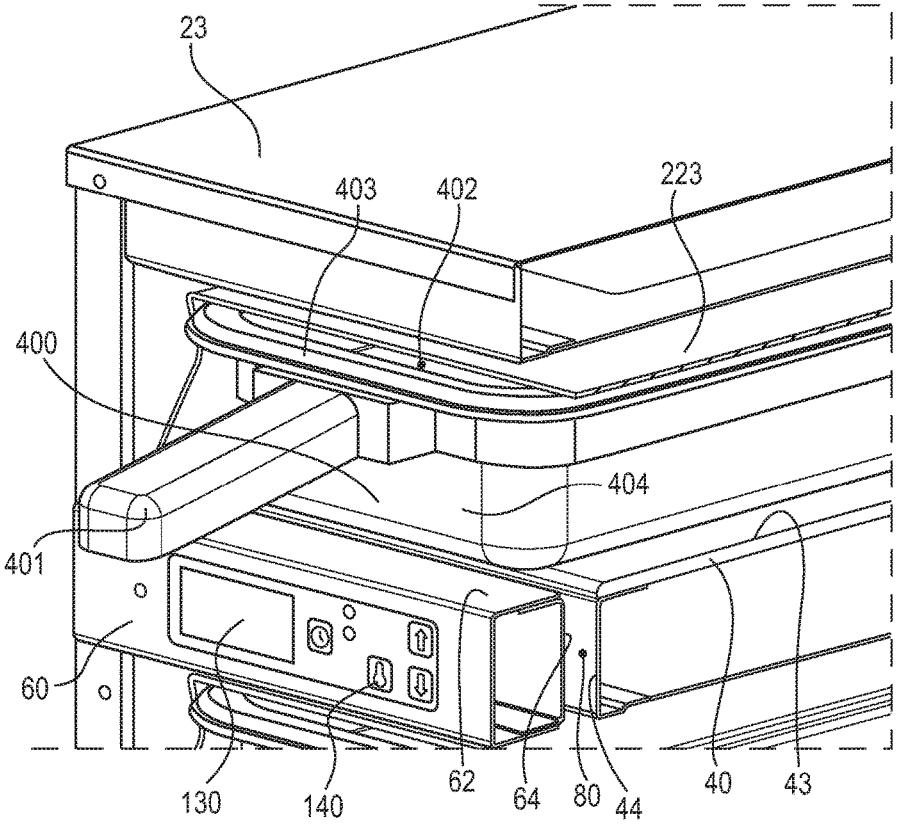

FIG. 7

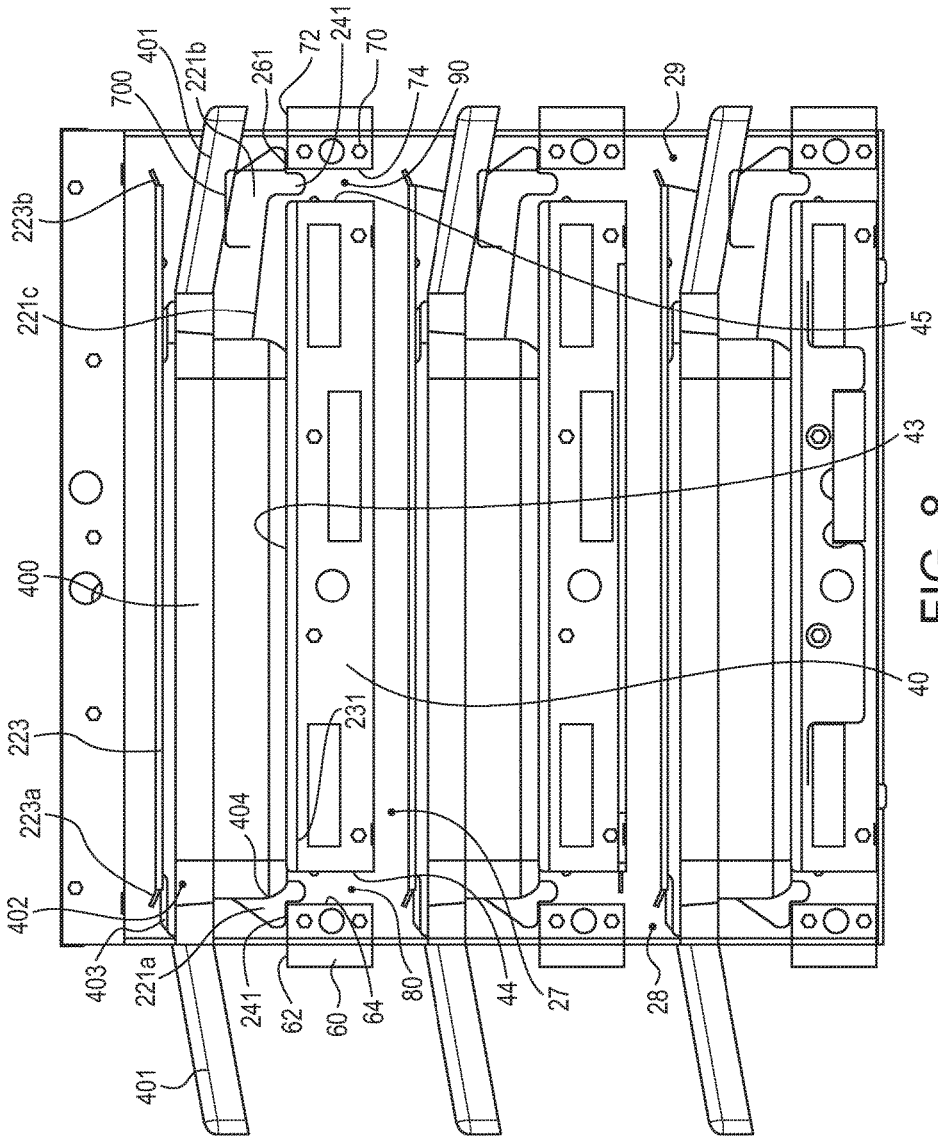
700
401
221b
261
72
241
70
74
90
29
223b
221c
45
43
400
40
223
231
223a
404
402
403
221a
241
62
60
64
80
44
27
28
401

FIG. 8

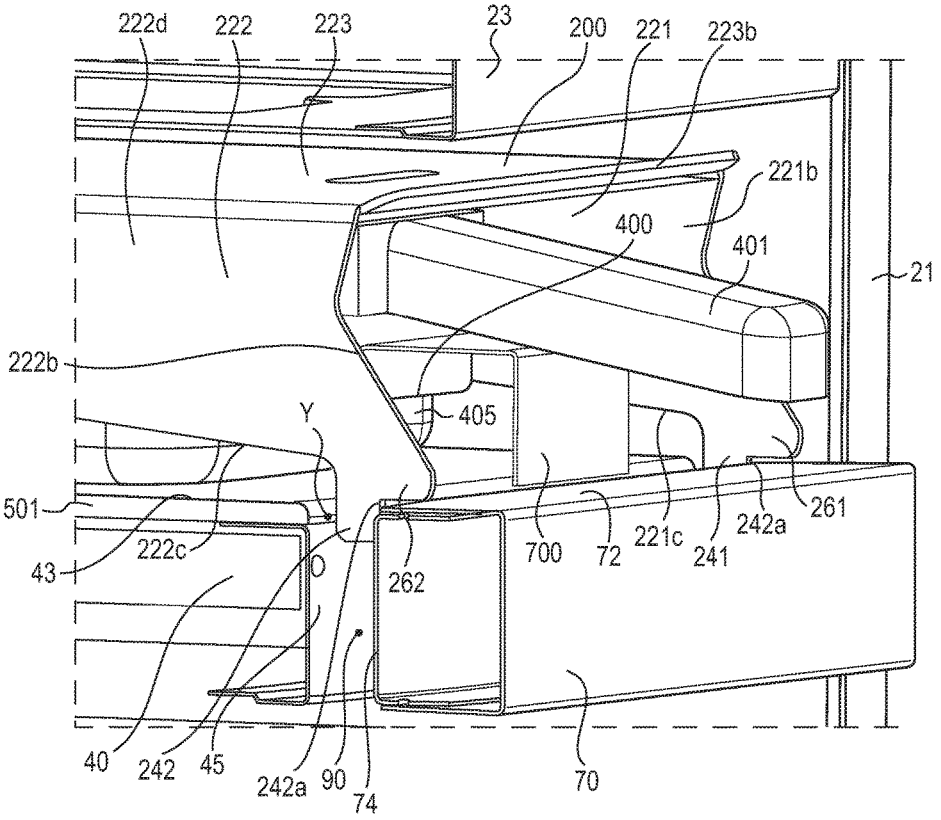
222d
222
223
23
200
221
223b
221b
400
401
21
222b
405
Y
501
43
222c
O
262
700
72
221c
241
242a
261
40
242
45
242a
90
74
70

FIG. 9

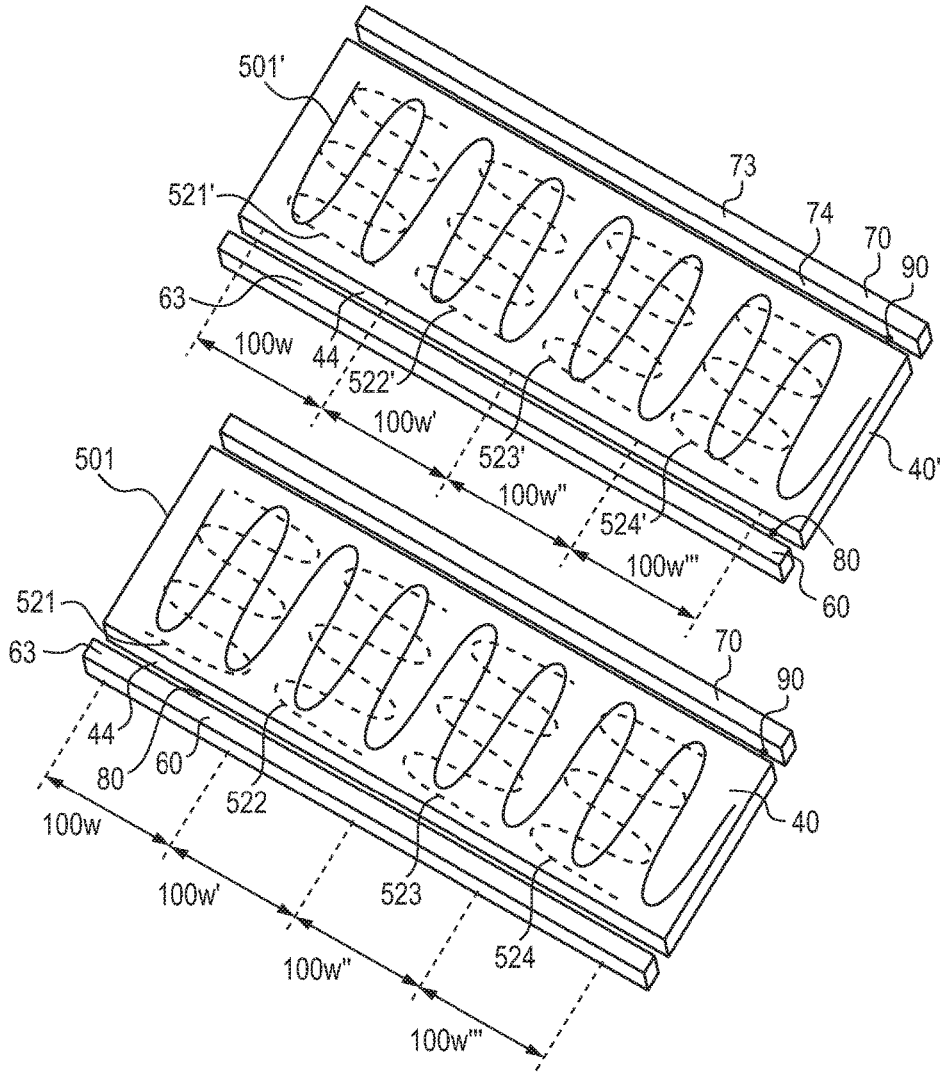
501'
521'
63
100w
44
522'
100w'
523'
100w"
524'
100w'''
73
74
70
90
40'
80
60
501
521
63
44
80
60
522
100w
100w'
523
100w"
524
100w'''
70
90
40

FIG. 10

MODULAR HOLDING CABINET

CROSS-REFERENCE TO RELATED APPLICATIONS

This application claims priority from U.S. Provisional Application No. 62/193,992, filed Jul. 17, 2015, the entirety of which is fully incorporated by reference herein.

TECHNICAL FIELD

Modular holding cabinets are often used in commercial restaurant kitchens for food preparation lines where various different food products and ingredients are needed to be readily available for the food service professionals to access as they prepare food orders. Modular holding cabinets are normally used to receive food products that have previously been cooked in a heated environment where the food product can be quickly and efficiently prepared for sale or presentation to a customer.

BRIEF SUMMARY

A representative embodiment of the disclosure is provided. The embodiment includes a modular holding cabinet. The cabinet includes a housing comprising left and right side walls and a top wall above the left and right walls defining an internal volume therewithin and an open front that allows access into the internal volume. The housing supporting at least one plate disposed within the internal volume, the at least one plate extends between the left and right side walls and below the top wall. The housing supports one or more end walls that are each aligned in parallel with and spaced outboard from an end face of a respective one of the one or more plates such that an air gap is established therebetween. The internal volume defines a plurality of discrete heating zones located above each of the one or more plates, each of the one or more discrete heating zones are configured to selectively receive heat from a first heater disposed within the respective plate and one of a plurality of second heaters disposed above the respective plate, wherein each of the plurality of discrete heating zones includes a different one of the plurality of second heaters which is disposed vertically above the discrete heating zone. The housing further comprises a plurality of displays and a plurality of inputs, with one of the plurality of displays and one of the plurality of inputs associated with each discrete heating zone, wherein each input is configured to receive user inputs associated with the operation of the respective discrete heating zone, and wherein each input is associated with controlling an operation of at least the second heater associated with the respective discrete heating zone.

Advantages of the disclosed devices will become more apparent to those skilled in the art from the following description of embodiments that have been shown and described by way of illustration. As will be realized, other and different embodiments are contemplated, and the disclosed details are capable of modification in various respects. Accordingly, the drawings and description are to be regarded as illustrative in nature and not as restrictive.

BRIEF DESCRIPTION OF THE DRAWINGS

FIG. **1** is a perspective view of a modular holding cabinet.

FIG. **2** is a view of detail B of FIG. **1**.

FIG. **3** is the view of FIG. **2** with two covers removed.

FIG. **4** is a perspective cross-sectional view of the modular holding cabinet of FIG. **1** showing a pan disposed on the control bar and the pan open.

FIG. **5** is a cross-sectional view of the modular holding cabinet of FIG. **1** showing the pan disposed upon the plate and the pan closed by the cover.

FIG. **5***a* is a view of detail A of FIG. **5** showing the cover cut to remove the right side wall.

FIG. **5***b* is a view of detail A of FIG. **5**.

FIG. **6** is a detail cross-sectional view of the modular holding cabinet of FIG. **1** showing the pan disposed upon the control bar and the pan open.

FIG. **7** is a perspective view of the modular holding cabinet of FIG. **1** showing the end of the pan disposed over the front air gap and the pan open.

FIG. **8** is a cross-sectional view of the modular holding cabinet of FIG. **1** showing an end of each pan disposed over the front air gap and the pan open.

FIG. **9** is a perspective cross-sectional view of the modular holding cabinet of FIG. **1** showing the rear end of the cover engaging the rear bar.

FIG. **10** is an exploded view of two sets of plates that collectively define several discrete heating zones of the modular holding cabinet of FIG. **1**.

DETAILED DESCRIPTION OF THE DRAWINGS AND THE PRESENTLY PREFERRED EMBODIMENTS

Turning now to FIGS. **1-10**, a modular holding cabinet **10** is provided. The modular holding cabinet **10** may be configured for use in the restaurant industry, such as the "fast food" industry or for other types of food service facilities, such as restaurants, cafeterias, banquet halls, or the like.

The modular holding cabinet **10** includes a housing **20** that is formed from left and right side walls **21**, **22**, a top wall **23**, and a bottom wall **24**. In some embodiments, some or all of these walls may be made from a single sheet of material, such as metal, while in other embodiments, some or all of these walls may be made from multiple sheets (or other geometries) of the same or different materials that are fixed together. In embodiments with multiple materials, some or all of the sheets may be disposed in parallel and either in contact with each other or may be spaced from each other. In some embodiments, other components may be associated with one or more of the left and right walls **21**, **22**, the top wall **23**, and the bottom wall **24**, such as insulation, electrical wiring, a controller **1000** (shown schematically in FIG. **1**), or the like.

The housing **20** partially encloses an internal volume **27** therewithin, which is accessible through an open front **28** of the cabinet **10**. In some embodiments, the internal volume **27** may also be accessible by a rear opening **29** that is defined on the opposite side of the housing **20** from the open front **28**. The open front **28** (and rear opening **29**, when provided) may be between the left and right walls **21**, **22**, below the top wall **23**, and above the bottom wall **24**.

The housing **20** includes one or more plates **40** that serve as shelves within the open volume **27**. The plates **40** may be rigidly attached to one or both of the left and right walls **21**, **22**. In some embodiments one, some, or all of the plates **40** may be positioned in parallel with one or both of the top wall **23** and the bottom wall **24**, and in some embodiments the one, all, or some of the plates **40** may be perpendicular to one or both of the left and right walls **21**, **22**.

Some or all of the plates **40** may extend to an end face, or end wall, **44** that establishes an end of the plate **40** that faces

and is proximate to the open front **28**. The end face **44** may extend along the entire width of each plate **40** between the left and right walls **21**, **22**. Some or all of the plates **40** may extend to a rear end face/wall **45** that is proximate to the open rear end **29** when provided.

In some embodiments, the cabinet **10** is configured such that each plate **40** establishes a plurality, such as 2, 3, 4, 5, or more discrete heating zones **100**. Each discrete heating zone **100** may be disposed above a top surface **43** of one of the plates **40** and established below the plate **40** that is above the respective plate **40** (or top wall **23** in embodiments where the discrete heating zone **100** is established upon the upper most plate **40**) within the internal volume **27**. The discrete heating zones **100** are each configured such that a food product that is disposed within the discrete heating zone **100** (such as within a pan **400** that is disposed within the discrete heating zone **100** and rests upon the plate **40**) is heated by the heat generated within the discrete heating zone **100**. As discussed herein, the heat may be from the first (lower) heater **501** that is located within the plate **40** upon which the food product rests (normally within the pan **400**), and the heat may additionally or alternatively be from the second (upper) heater **521** that is associated with the discrete heating zone **100** that is in the plate **40** (or top wall **23**) that is above the food product. The first and second heaters **501** and **521**, **522**, **523**, **524** are discussed in further detail below.

The cabinet **10** may further include one or more end walls **60** that are each aligned in parallel with and spaced outboard from an end face **44** of one of the respective plates **40**, such that each plate **40** has one end wall **60** that is disposed outboard of it. All or a portion of the end wall **60** (as well as the similar rear wall **70**, discussed below) may extend out of the housing **20** and specifically out of the internal volume of the cabinet, which is the heated environment of the housing **20**. Each respective end wall **60** may be positioned with respect to each respective plate **40** such that an air gap, i.e. a space **80**, is established therebetween, as best shown in FIGS. **4-8**. In some embodiments, the air gap **80** may extend the entire distance between the left and right walls **21**, **22**, while in other embodiments, the air gap **80** may extend only a portion of the distance between the left and right walls **21**, **22**. In these embodiments, the air gap **80** may be discontinuous due to the placement of material within the space that would define the air gap (such as insulation, electrical conduit, or structure).

In some embodiments, one or more of the end walls **60** may be disposed such that a top surface **62** of the end wall **60** is disposed along the same plane as the top surface **43** of the associated plate, as shown schematically in FIG. **5***a*.

Each end wall **60** may include a plurality of displays **130** and inputs **140**, and more specifically, each end wall **60** may include a display **130** and input **140** that is associated with each discrete heating zone **100** that is provided above the plate **40**. In these embodiments, the end bar **60** is a control bar. In other embodiments, the end walls **60** (other than the lower most end wall **60**) and the top wall **23** may include a plurality of displays **130** and inputs **140** that are associated with the discrete heating zone **100** that is located below the specific plate **40** and top wall. With reference to FIG. **1**, in this embodiment a plurality of displays **130** and inputs **140** would be positioned upon the top wall at position "T", and the displays **130** and inputs **140** that are depicted at position "S" in FIG. **1** would not be provided. In still other embodiments, the displays **130** and inputs **140** associated with each of the discrete heating zones **100** in the housing may be disposed upon other surfaces than on the end wall **60**, such as the side walls, or in a unified display and control device, such as a monitor and an input keyboard.

As mentioned above, in some embodiments, the housing **20** may include a rear opening **29** that provides for access to the plates **40**, and more specifically to the discrete heating zones **100** above (and below) the plates **40**. The rear opening **29** may be a full opening (other than the existence of the plates **40**, and the rear end walls **70**, discussed below). In these embodiments, the user may remove or insert pans **400** through the rear opening **29** as well as through the front opening **28**. In other embodiments, a portion of the rear opening **29** may be blocked, such as with bars **700** (FIGS. **8** and **9**) to prevent pans **400** from being withdrawn through the rear opening **29**. In other embodiments, the housing **20** may not include a rear opening **29**, but instead may include a rear wall (not shown) that further partially or fully encloses the internal volume **27** from the rear of the housing **20**.

In embodiments where rear end walls **70** are provided in conjunction with one or more of the plates **40**, the rear end walls **70** may be disposed outboard of the plate **40**, and specifically a second end/face/wall **45** of the plate **40**, to establish a second air gap **90** (i.e. a second space) between the respective rear end wall **70** and a second end face **45** of each plate **40**, with the second end face **45** on an opposite side of the plate **40** from the first end face **44**. When provided, the rear end walls may include a plurality of displays **130** and a plurality of inputs **140** that are associated with the discrete heating zones **100** that are above the plate **40** that is associated with the rear end wall **70** (or in other embodiments, the displays **130**, and inputs **140** associated with the discrete heating zones **100** that are below the plate **40** with which the rear end wall **70** is associated). In embodiments where the plurality of displays **130** and inputs **140** are provided on both the front and rear end walls **60**, **70**, the respective displays **130** may be operated simultaneously, and one or both of the inputs **140** may be configured to accept user instructions.

In some embodiments, one or more of the rear end walls **70** may be disposed such that a top surface **73** of the rear end wall **70** is disposed along the same plane as the top surface **43** of the associated plate **40**, as shown schematically in FIG. **5***a*.

Similar to the air gap **80** discussed above, in some embodiments the rear end wall **70** and the plate **40** may establish an air gap **90** that extends all of the way between the left and right side walls **21**, **22**, while in other embodiments, the air gap **90** may be discontinuous, and be oriented and provided (or not provided) in the same manner as the air gap **80** discussed above.

In some embodiments the holding cabinet **10** may include one or a plurality of removable covers **200** that are configured to be positioned within the open volume **27** and within one of the plurality of discrete heating zones **100**. The cover extends between a first end **201** and a second end **202**, and in some embodiments, the first and second ends **201**, **202** of the cover may be symmetrical, such that, when the cover **200** is installed within the housing, either end may be disposed proximate to the open front portion **28** of the housing **20** with the opposite end proximate to the rear end of the housing **20**.

The covers **200** may each include a top wall **223** and opposed left and right walls **221**, **222** that each extend downwardly from the top wall **223**. The left and right walls **221**, **222** extend between front ends **221***a*, **222***a* and rear ends **221***b*, **222***b* with a central portion **222***d* (central portion of the left wall **221** like central portion **222***d* of the right wall **222**) therebetween. The front and rear ends **223***a*, **223***b* of

the top wall **223** each include an angled portion at the respective front and rear edge of the top wall, each angled portion is angled upwardly from the top wall **223**.

The front ends **221***a*, **222***a* of the left and right side walls **221**, **222** each include a horizontal ledge **251**, **252** that is configured to rest upon the top surface **62** of the front wall **60** when the cover **200** is disposed within the housing and extends over the plate **40**. A foot **231**, **232** extends below the ledge **251**, **252** and is positioned behind the ledge. Each foot **231**, **232** is configured to extend into the front air gap **80**, with a front edge **231***a*, **232***a* of each foot **231**, **232** resting against a rear end **64** of the front wall **60**. The foot **231**, **232** when properly resting within the air gap **80** does not contact the front wall **44** of the plate **40**, and a space X (FIG. **5** is established between each foot **231**, **232** and the front wall **44** of the plate **40** when the cover **200** is properly installed.

The rear ends **221***b*, **222***b* of the left and right side walls **221**, **222** are configured in the same manner as the front ends **221***a*, **222***b*. Specifically, the each rear end includes a horizontal ledge **261**, **262** that that is configured to rest upon the top surface **72** of the rear wall **70** when the cover **200** is disposed within the housing and extends over the plate **40**. A foot **241**, **242** extends below the ledge **261**, **262** and is positioned behind the ledge. Each foot **241**, **242** is configured to extend into the rear air gap **90**, with a rear edge **241***a*, **242***a* of each foot **241**, **242** resting against a front end **74** of the rear wall **70**. The foot **241**, **242** when properly resting within the air gap **90** does not contact the rear side **45** of the plate **40**, and a space Y (FIG. **5**) is established between each foot **241**, **242** and the rear side **45** of the plate **40** when the cover **200** is properly installed.

When the cover **200** is installed within the housing **20**, the cover extends over the plate **40**, but does not contact or engage the plate **40** in any manner.

The central portion **221***d*, **222***d*, specifically the portion inboard of each of the front and rear feet **231**, **241** and **232**, **242** of each of the left and right walls **221**, **222** each include a bottom edge **221***c*, **222***c* that is scalloped upwardly as it extends between the feet, such that the bottom edge **221***c*, **222***c* does not contact or engage in any manner the plate **40**. The bottom edge **221***c*, **222***c* of each wall may be curved or include straight portions, or a combination of both. In some embodiments, and as shown in FIG. **5** the central portion (**222***d* specifically shown in the figure, but the central portion **221***d* of the left wall **221** is similar) includes straight edges that extend upwardly to a vertex at the center of the cover **200**. In other embodiments, the scalloped portion may be horizontal along its length, at a height where the respective bottom edge **221***d*, **222***d* does not contact the top surface **43** or the ends **44**, **45** of the plate **40** or otherwise engage the plate **40**.

As can be understood with review of FIG. **5**, the engagement of the feet **231**, **232** into the air gaps **80**, **90**, and specifically the contact between the feet **231**, **232** and the respective side wall **64**, **74** of the respective front or end wall **60**, **70** fixes the position of the cover **200** within the housing **20** and prevents the cover **200** from moving into and out of the housing **20** when pans **400** (which are positioned within a cover **200**, as discussed below) are slidingly pulled out of and pushed into the housing **20**, such as by the handle **401**, when provided.

As can be best appreciated with a review of FIGS. **5-6** and **9**, the engagement between the feet **231**, **232** and **241**, **242** and the air gaps **80**, **90** fixes the cover **200** longitudinally within the housing **20**, while the cover **200** may be able to slide horizontally within the housing **20** such as toward or away from the left or right side walls **21**, **22**. In some embodiments, the housing **20** is sized so that when each discrete heating zone **100** receives a cover **200**, the neighboring side walls of the covers contact each other or are in close proximity with each other, and in some embodiments, the side wall of the outermost covers contact the neighboring side wall of the housing **21**, **22**, such that the covers **200** are fixed horizontally. In some embodiments, the housing **20** may include one or more tracks or barriers that fix the covers **200** horizontally with respect to the desired discrete heating zone **100** when installed.

The covers **200** are configured to be removable from the housing **20** without any tools. Specifically, the cover **200** can be removed from the housing by raising the cover **200** upward within the internal volume **27** until the feet **231**, **232**, **24\1**, **242** no longer extend within the respective air gap **80** (**90**), and then the cover **200** may be slidingly withdrawn from the internal volume **27**. Conversely, the cover **200** may be slidingly installed into the internal volume **27**, and slid until the feet **231**, **232**, **241**, **242** extend into the air gap **80** (**90**).

The cover **200**, container **400**, and the plate **40** are configured such that the cover **200** closes a top opening **402** into the pan **400** when the container rests upon the plate **40**, as shown in FIGS. **5-5***b*. As depicted in FIG. **5***a*, the front end **404** of the pan **400** is positioned upon the plate **40** such that the front end **404** of the pan is behind the front wall **44** of the plate by a distance Z. In some embodiments, the cover **200** (and specifically the top wall **223** of the cover **200**), is configured such that the opening **402** into the pan **400** is fully closed by the top surface **223** (resting upon the top **403** of the pan) (therefore sealing the pan against humidity escaping from the volume of the pan **400**) when the front end **404** of the pan rests upon the plate **40** such that the front surface of the pan **400** is aligned with or just slightly inboard of the front side **44** of the plate **40**.

In other embodiments, the cover **200** may be configured such that the cover does not fully close the opening **402** into the pan **400** until the pan **400** is disposed rearwardly of the front end **44** of the plate, such as the distance Z, which may be 1, 2, 3, 4 inches or another suitable distance from the front wall **44**. In this embodiment, user would be prompted to push the pan **400** further into the internal volume **27** in order to fully cover the opening **402** of the pan (than embodiments where the pan was fully closed when the front end **404** rested on or just rearwardly the front end wall **44** of the plate), which may make the entire pan **400** be maintained warmer (or be heated in a more thermal efficient manner) due to the heat loss through the open front **28** of the housing **20** or potentially less heat generation of the upper or lower heaters **521**, **501** in the at the end of the plate than in the relative middle of the plate **40**.

As shown in FIGS. **4** and **6**, the opening **402** of the pan **400** is exposed (allow access into the volume of the pan to add and remove food from the pan **400**) when the pan rests upon the control bar **60**. Specifically, when the pan (any portion of the pan) rests upon the control bar **60**, the top surface **223** of the cover **200** does not extend completely over the opening **402**. When the user desires to fully close the opening **402** of the pan from this position, the user pushes the pan **400** further onto the plate **40** until the top wall **223** of the cover **200** fully covers the opening into the pan **400**, and when the pan **400** is entirely on the plate **40**. It may be beneficial to design the cover **200** so that the pan **40** is partially open when the pan rests upon the control bar **60**, because the control bar supports the pan **400** in this orientation thereby allowing the user to let go of the pan temporarily if their hand is needed for a cooking operation (with

their opposite hand being used to add or remove food from the volume of the pan **400** through the opening), as well as to minimize the distance that the pan **400** needs to be withdraw from the discrete heating zone **100** to thereby minimize the amount of food within the pan **400** that leaves the discrete heating zone **100** while the cook temporarily pulls the pan **400** out to obtain some food within the pan.

While not specifically shown, in "pass-through" models of the cabinet **10**, the opening **402** into the pan may be accessible when the pan **400** rests upon the rear bar (i.e. the orientation of FIGS. **4** and **6** as applied to the opposite end **405** of the pan and the rear bar **70**), which would be beneficial in operation for the same reasons as discussed above. Similarly, in pass-through models of the cabinet, the cover **200**, pan **400**, and the plate **40** are configured such that opening **402** into the pan **400** is not closed (by the top wall **223** of the cover **200**) until the pan fully rests upon the plate **40**. In some embodiments, the opening **402** into the pan **400** isn't closed until the pan is rests upon the plate **40** past the rear end **45**, such as a distance the same or similar to the distance Z of FIG. **5***a*, for the same reasons as discussed above.

As FIGS. **7** and **8** provide views of the front end **404** of the pan **400** disposed above the air gap **80**, and FIG. **7** shows that the opening **402** into the pan **400** is partially visible and therefore is not fully closed. In pass through embodiments, the opening **402** into the pan **400** would also not be fully closed when the opposite end **405** (FIG. **9**) of the pan **400** is disposed over the rear air gap **90**, and would be in a position similar to the position of FIGS. **7** and **8**.

The covers **200**, when provided, may be configured to partially enclose one of the discrete heating zones **100** and specifically the zone above the plate **40**. The covers **200** may be sized to be larger than the pan **400** that is received within the cover and between the side walls **221**, **222**, or at least larger than the opening of the pan **400** to allow receipt of the food product therein. The covers **200** are sized such that the pan **400** can freely slide into and out of the cover **200** (such as with the handle **401**), either with sliding contact between the pan **400** and the inner surfaces of the cover **200** (one, two or all of the left and right walls **221**, **222** and the top wall **223**), or with a space between the walls of the pan **400** and one, two, or all of the left and right walls **221**, **222** and the top wall **223** of the cover **200**.

As easily understood by one of ordinary skill, the covers **200** are readily removable and replaceable within the internal volume **27** of the housing **20**, and the device **10** may be operated with some covers **200** enclosing some discrete heating zones **100** and other discrete heating zones **100** free of covers (but including pans **400**). For example, when it is desired to heatingly store food products in a moist environment, the cover **200** may be installed in the discrete heating zone such to enclose (or only leave a small space above) the opening **402** into the pan **400** and to prevent moisture from the food products within the pan **400** from leaving the pan **400**. In other words, the internal volume **228** of the cover **200** closely matches (and is slightly larger) than the geometry of the opening **402** into pan **400**, and specifically, the top wall **223** of the cover **200** rests upon the top **403** of the pan **400** or is only slightly above the top **403** of the pan **400**. Conversely, where a relatively dry environment is desired, the cover **200** may be removed from the discrete heating zone **100** to allow any moisture within the food product disposed within the opening **402** of the pan **400** to travel away from the pan **400** due to the large space between the pan's opening **402** and the bottom surface of the plate **40** (or the top wall **23**) above the pan **400**.

As discussed above, each plate **40** may include one or a plurality of discrete heating zones **100**. As shown schematically in FIG. **2**, discrete heating zones **100** may be positioned adjacent to each other upon a plate **40**, with the width of two neighboring discrete heating zones identified by **100***w* and **100***w*' (and a portion of another neighboring zone depicted as **100***w*"), with the height of both of these discrete heating zones identified by **100***h*, i.e. above the plate **40** and below the top wall **23**.

FIG. **3** depicts the view of FIG. **2** with covers **200** removed from the discrete heating zones identified by width **100***w*' and **100***w*".

As discussed above and as depicted schematically in FIG. **10**, which shows a plate **40** and a second plate (**40'**) that normally rests above the plate **40** within the housing **20** exploded above the plate **40**, each discrete heating zone (schematically shown with their neighboring widths **100***w*, **100***w*', **100***w*", **100***w*'") may receive heat from a lower heater **501** that is disposed within the plate **40** and an upper heater that is disposed within the plate **40'** (which, when assembled is located above the plate **40**). The lower heater **501** may be disposed within the plate **40** above which the cover **200** extends and, when provided, the pan **400** rests) (with the discrete heating zone **100** above that plate **40**) and the upper heaters **521**, **522**, **523**, **524** disposed within the plate **40** (or upper wall **23**) that is above the plate **40**. In embodiments where discrete heating zones **100** are disposed above the bottom of the housing, the lower heater **501** may be within the bottom wall **24**.

In some embodiments, the lower heater **501** (depicted schematically as a solid line within the plates **40**, **40'**) may be a single electric heating element such as a resistance heating element that extends about the entire width of the plate **40**. In some embodiments, the lower heater **501** may be a straight heating element, multiple straight heating elements powered from the same source, or a single heating element that is in a serpentine (as depicted) or in other patterns.

In some embodiments, the lower heater **501** may produce the same heat output per unit of length and may be disposed within the plate **40** such that the heat flow through upper surface of the plate **40** (i.e. the surface that the pan **400** and the rests upon) may be uniform (when the heater is disposed in a uniform manner), or substantially uniform through the entire surface of the plate **40**. In other embodiments, the lower heater **501** may be formed from a heating element that generates more heat per unit length in some sections, and lower heat per unit length in other sections. In some embodiments, the lower heater **501** may be disposed such that the middle of the plate **40** may have more heat than the front and back and/or left and right side portions of the plate **40**. One of ordinary skill in the art with a thorough review of this specification will appreciate that a suitable selection for a layout of the lower heater **501** would be only a product of routine optimization based upon the desired heating profile (either constant or cyclical, or based upon feedback control). In embodiments where the heater **501** is a single heater, the heater **501** may be controlled to be always on when the device **10** is on, or in other embodiments, a controller (**1000**, FIG. **1**, shown schematically) may operate the heater **501** to maintain the temperature in the discrete heating zones **100** as desired, such as cyclically.

In other embodiments, the plate **40** may include multiple heaters **501**, such as one heater **501** per discrete heating zone **100**, with the controller **1000** controlling the heat to each heater **501** to maintain the desired temperature in the specific discrete heating zone **100**.

One or more upper heaters **521** (**522**, **523**, **524**) may be provided within each plate **40** (and within the upper wall **23**) to generate heat that is transferred into the discrete heating zone **100** that is below the respective plate **40** (and upper wall **23**). As schematically depicted in FIG. **7**, the upper heaters **521**, **522**, **523**, **524** may be disposed above the discrete heating zone (**100***w*, **100***w*', **100***w*", **100***w*'", respectively) such that the heat generated by the specific upper heater is directed to the discrete heating zone **100** disposed below the respective heater, but the neighboring discrete heating zones **100** do not receive a significant heat input from the upper heaters that are not directly thereabove. As can be understood with review of FIG. **7**, discrete heating zone **100***w* receives heat from the lower heater **501**, as well as the upper heater **521**, the discrete heating zone **100***w*' receives heat from the lower heater **501** and the upper heater **522**, etc. For ease of understanding the upper heaters **521**, **522**, **523**, **524** are depicted in broken lines to visually differentiate them from the lower heater **501**.

As shown in FIG. **10**, each plate **40** (**40**') may include both a lower heater **501**, and one or more upper heaters **521**, **522**, **523**, **534** to allow the housing to maintain discrete heating zones in multiple levels of the housing **20**.

The upper heaters **521**, **522**, **523**, **524** may be similar heaters to the lower heater, and may be disposed in the specific or general orientation, or in a different orientation as the lower heaters. In FIG. **10**, the upper and lower heaters are drawn to serpentine in opposite directions, which is drawn for the sake of differentiating the heaters in the figure, but the upper and lower heaters may be disposed in the same orientation and direction, or in different directions. In some embodiments, insulation may be provided between the upper heaters **521**, **522**, **523**, **524** in a plate **40** and the lower heater **501** in the same plate, so that the heat generated by the respective heater travels generally through the surface of the plate **40** proximate to the plate and not in the direction of the other heater within the plate **40**. While the name "upper" heater is used for elements **521**, **522**, **523**, **524**, the term "upper" refers to the location of that heater with respect to the discrete heating zone **100** that the heater interacts with, i.e. the "upper" heaters **521**, **522**, **523**, **524** are disposed above the discrete heating zones, while the "upper heaters" may be disposed within the relative lower portion of the plate **40**. Conversely, the "lower" heater **501** refers to the location of the heater with respect to the discrete heating zone **100** that the heater interacts with, i.e. the lower heater interacts with the discrete heating zone **100** that is directly above the plate **40** and the "lower" heaters **501** may be disposed in the upper portion of the plate **40**.

The upper heaters **521**, **522**, **523**, **524** may be individually controlled to maintain the temperature within the respective discrete heating zone **100** associated with the heater, such as controlled with a set duty cycle, or controlled based upon feedback from one or more temperature sensors that are disposed proximate to the specific discrete heating zone **100**. As can be appreciated, the housing (and specifically the front end wall **60**, and/or rear end wall **70**) includes inputs **140** and displays **130** that are associated with each discrete heating zone **100**, and the instructions inputted by the user (such as a timer, or controls to set a desired temperature or temperature range) may be used by the controller **1000** to operate the respective upper heater (and lower heater **501** in embodiments where the lower heater (or a portion of the lower heater may be controlled) as necessary to maintain the desired temperature within the zone). One of ordinary skill in the art will appreciate that controllers are well known that are capable of controlling one or more heaters based upon feedback systems to maintain a monitored location (such as a discrete heating zone) within a temperature range.

While the preferred embodiments of the disclosure have been described, it should be understood that the disclosure is not so limited and modifications may be made without departing from the invention. The scope of the invention is defined by the appended claims, and all devices that come within the meaning of the claims, either literally or by equivalence, are intended to be embraced therein.

The invention claimed is:

1. A modular holding cabinet, comprising:

a housing comprising left and right side walls and a top wall above the left and right walls defining an internal volume therewithin, an open front that allows access into the internal volume, the housing supporting at least one plate disposed within the internal volume, the at least one plate extends between the left and right side walls and below the top wall,

the housing supports one or more end walls that are each spaced outboard from an end face of a respective one of the one or more plates such that an air gap is established therebetween;

the internal volume defining a plurality of discrete heating zones located above each of the one or more plates, each of the one or more discrete heating zones are configured to selectively receive heat from a first heater disposed within the respective plate and one of a plurality of second heaters disposed above the respective plate, wherein each of the plurality of discrete heating zones receives heat from a different one of the plurality of second heaters which is disposed vertically above the discrete heating zone,

the housing further comprising a plurality of displays and a plurality of inputs, with one of the plurality of displays and one of the plurality of inputs associated with each discrete heating zone, wherein each input is configured to receive user inputs associated with the operation of the respective discrete heating zone, and wherein each input is associated with controlling an operation of at least the second heater associated with the respective discrete heating zone,

further comprising one or more covers that are configured to be removably disposed within the internal volume, wherein the covers are dimensioned such that when positioned over the plate the cover partially encloses one of the discrete zones upon the plate and when centered above one discrete zone the cover does not interact with other discrete zones over the plate wherein each of the plurality of covers include a top wall and opposed left and right walls that extend from the top wall, wherein a front portion of one or both of the left and right walls includes a front foot that extends below a bottom edge of the respective left or right wall along a central portion of the cover, wherein the foot is configured to extend within the first air gap wherein the bottom edge of each of the left and right walls is scalloped above the foot such that when the foot extends within the air gap the bottom edge does not contact any portion of the plate.

2. The modular holding cabinet of claim **1**, wherein each end wall includes the collective displays and inputs that are associated each of the discrete heating zones that are disposed above the plate associated with that end wall.

3. The modular holding cabinet of claim **1**, wherein each end wall includes the collective displays and inputs that are

associated with each discrete heating zone that is disposed below the plate that the collective displays and inputs are disposed upon.

4. The modular holding cabinet of claim **1**, further comprising a rear opening into the internal volume from an opposite side of the housing as the open front, and further comprising one or more rear end walls that are each spaced outboard from a respective one of the one or more plates, wherein each of the rear end walls are spaced outboard of the respective plate with a second space provided between the rear end wall and a second end face, opposite the end face, of the respective plate.

5. The modular holding cabinet of claim **4**, wherein the second space provided between the respective end rear wall and the second end face of the respective plate extends between the left and right walls.

6. The modular holding cabinet of claim **1**, wherein the cover fully encloses an opening to a pan disposed therein when the pan is entirely disposed upon the plate.

7. The modular holding cabinet of claim **6**, wherein a portion of the opening into the pan is not enclosed by the cover when a portion of the pan is disposed upon the end wall.

8. The modular holding cabinet of claim **6**, wherein a portion of the opening into the pan is not enclosed by the cover when a portion of the pan is disposed over the air gap.

9. A modular holding cabinet, comprising:

a housing comprising left and right side walls and a top wall above the left and right walls defining an internal volume therewithin, an open front that allows access into the internal volume, the housing supporting at least one plate disposed within the internal volume, the at least one plate extends between the left and right side walls and below the top wall,

the housing supports one or more end walls that are each spaced outboard from an end face of a respective one of the one or more plates such that an air gap is established therebetween;

the internal volume defining a plurality of discrete heating zones located above each of the one or more plates, each of the one or more discrete heating zones are configured to selectively receive heat from a first heater disposed within the respective plate and one of a plurality of second heaters disposed above the respective plate, wherein each of the plurality of discrete heating zones receives heat from a different one of the plurality of second heaters which is disposed vertically above the discrete heating zone,

the housing further comprising a plurality of displays and a plurality of inputs, with one of the plurality of displays and one of the plurality of inputs associated with each discrete heating zone, wherein each input is configured to receive user inputs associated with the operation of the respective discrete heating zone, and wherein each input is associated with controlling an operation of at least the second heater associated with the respective discrete heating zone,

further comprising one or more covers that are configured to be removably disposed within the internal volume, wherein the covers are dimensioned such that when positioned over the plate the cover partially encloses one of the discrete zones upon the plate and when centered above one discrete zone the cover does not interact with other discrete zones over the plate wherein each of the plurality of covers include a top wall and opposed left and right walls that extend from the top wall, wherein a front portion of one or both of the left and right walls includes a front foot that extends below a bottom edge of the respective left or right wall along a central portion of the cover, wherein the foot is configured to extend within the first air gap;

wherein the first portion of each of the left and right side walls includes a horizontal portion that rests upon the front wall when the front foot extends into the air gap.

10. The modular holding cabinet of claim **9**, wherein the front foot contacts a rear side of the front wall when the front foot extends into the air gap.

11. A modular holding cabinet, comprising:

a housing comprising left and right side walls and a top wall above the left and right walls defining an internal volume therewithin, an open front that allows access into the internal volume, the housing supporting at least one plate disposed within the internal volume, the at least one plate extends between the left and right side walls and below the top wall,

the housing supports one or more end walls that are each spaced outboard from an end face of a respective one of the one or more plates such that an air gap is established therebetween;

the internal volume defining a plurality of discrete heating zones located above each of the one or more plates, each of the one or more discrete heating zones are configured to selectively receive heat from a first heater disposed within the respective plate and one of a plurality of second heaters disposed above the respective plate, wherein each of the plurality of discrete heating zones receives heat from a different one of the plurality of second heaters which is disposed vertically above the discrete heating zone,

the housing further comprising a plurality of displays and a plurality of inputs, with one of the plurality of displays and one of the plurality of inputs associated with each discrete heating zone, wherein each input is configured to receive user inputs associated with the operation of the respective discrete heating zone, and wherein each input is associated with controlling an operation of at least the second heater associated with the respective discrete heating zone,

further comprising one or more covers that are configured to be removably disposed within the internal volume, wherein the covers are dimensioned such that when positioned over the plate the cover partially encloses one of the discrete zones upon the plate and when centered above one discrete zone the cover does not interact with other discrete zones over the plate wherein each of the plurality of covers include a top wall and opposed left and right walls that extend from the top wall, wherein a front portion of one or both of the left and right walls includes a front foot that extends below a bottom edge of the respective left or right wall along a central portion of the cover, wherein the foot is configured to extend within the first air gap,

further comprising a rear opening into the internal volume from an opposite side of the housing as the open front, and further comprising one or more rear end walls that are each spaced outboard from a respective one of a second end face of the one or more plates, wherein each of the rear end walls are spaced outboard of the respective plate with a second air gap provided between the rear end wall and a second end face, opposite the end face, of the respective plate,

wherein a rear portion of one or both of the left and right walls of the cover includes a second foot that extends below the bottom edge of the respective left or right

wall along the central portion of the cover, wherein the second foot is configured to extend within the second air gap when the cover is positioned over the plate.

12. The modular holding cabinet of claim **1**, wherein the cover can be removed from and installed into the housing to partially enclose one of the discrete heating zones without any tools.

13. The modular holding cabinet of claim **1**, wherein the at least one plate is disposed within the housing in parallel with the top wall.

14. The modular holding cabinet of claim **1**, wherein the one or more end walls each are aligned in parallel with a respective one of the one or more end plates that is associated with the respective end wall.

15. The modular holding cabinet of claim **1**, wherein a top surface of each of the one or more end walls extends along the same plane as a top surface of the respective plate that is associated with the respective end wall.

16. The modular holding cabinet of claim **1**, wherein one or more end walls extend outside of the internal volume of the housing.

* * * * *