US006011243A

United States Patent [19]

Arnold et al.

[11] **Patent Number: 6,011,243**

[45] **Date of Patent: Jan. 4, 2000**

[54] **HOLDING CABINET AND METHOD AND APPARATUS FOR CONTROLLING A HOLDING CABINET**

[76] Inventors: **Anthony W. Arnold**, 5400 Overton Rd., Nashville, Tenn. 37220; **Steven B. Collins**, 934 Damron Rd., Estill Springs, Tenn. 37330; **Jack M. Johnson**, 143 Lake Park Dr., Nashville, Tenn. 37211; **Jeffrey S. Williams**, 879 Stonebrook Blvd., Nolensville, Tenn. 37135; **John M. Cox**, 205 Key Ct., Brentwood, Tenn. 37027; **John Guthrie**, 120 Timber Ridge, Nashville, Tenn. 37217; **Thomas A. McMillan**, 713 Vosswood Dr., Nashville, Tenn. 37205

[21] Appl. No.: **08/881,158**

[22] Filed: **Jun. 24, 1997**

Related U.S. Application Data

[60] Provisional application No. 60/020,691, Jun. 27, 1996.

[51] **Int. Cl.**[7] **H05B 1/02**

[52] **U.S. Cl.** ..... **219/506**; 219/486; 219/214; 219/494; 99/484; 99/468; 221/150 A; 221/150 R

[58] **Field of Search** ..... 219/214, 497, 219/494, 483–486, 506; 221/150 A, 150 R, 224, 225, 211, 298, 122, 150 HC; 99/468, 335, 483, 484, 357

[56] **References Cited**

U.S. PATENT DOCUMENTS

5,093,556 3/1992 Oelfke 219/386
5,188,020 2/1993 Buchnag 99/468
5,579,952 12/1996 Fiedler et al. ..... 221/150 A
5,772,072 6/1998 Prescott 221/121

OTHER PUBLICATIONS

Chromalox: User's Manual 3390 Multiloop Controller, pp. 1–107, Jan. 1992.

Primary Examiner—Mark Paschall

[57] **ABSTRACT**

A cabinet and control system for maintaining a food product within a predetermined temperature range for a holding period of time not exceeding a predetermined maximum time. The cabinet comprises a housing having a front panel and a passageway opening at the front panel. The passageway is capable of receiving at least two containers of the food product. A temperature element positioned in said passageway maintains the passageway within the predetermined temperature range. A processing circuit tracks the amount of time each container of food product remains within the passageway. The processing circuit provides a signal output indicating which container has been within said passageway the longest and an alarm signal when either container remains within said passageway beyond said maximum time. A display positioned on said housing proximate to said passageway receives the said signal output and indicates which container has been within the passageway the longest. The display also receives the alarm signal and indicates which one of the containers has been within the passageway for a period of time exceeding the predetermined maximum time.

57 Claims, 26 Drawing Sheets

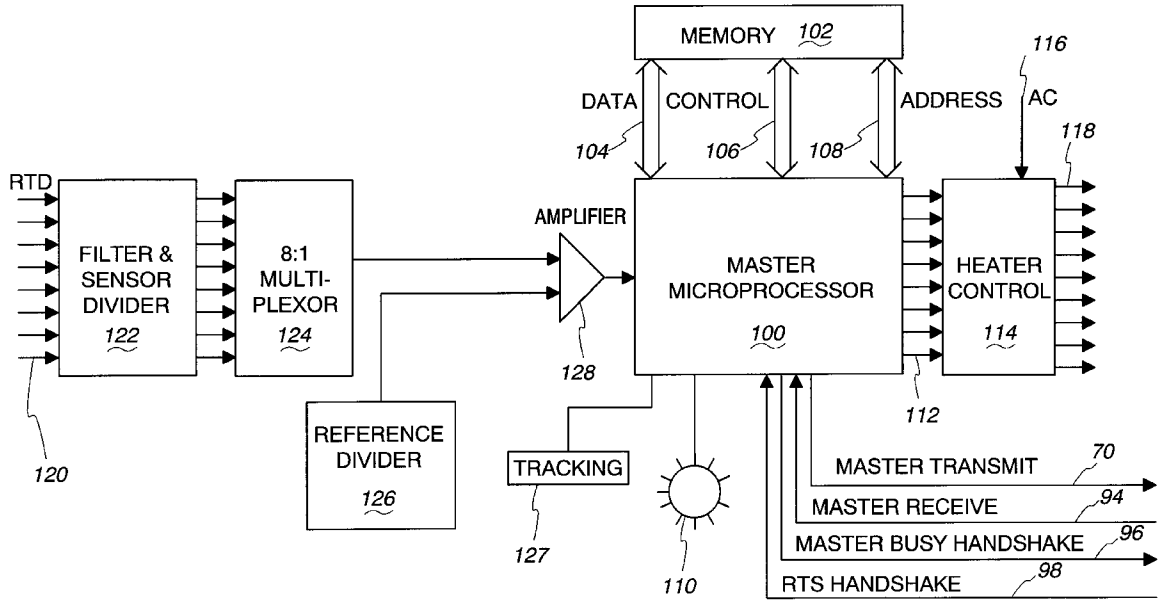

Duke Manufacturing Co. EX1029
U.S. Patent No. 9,976,750

Fig. 1a

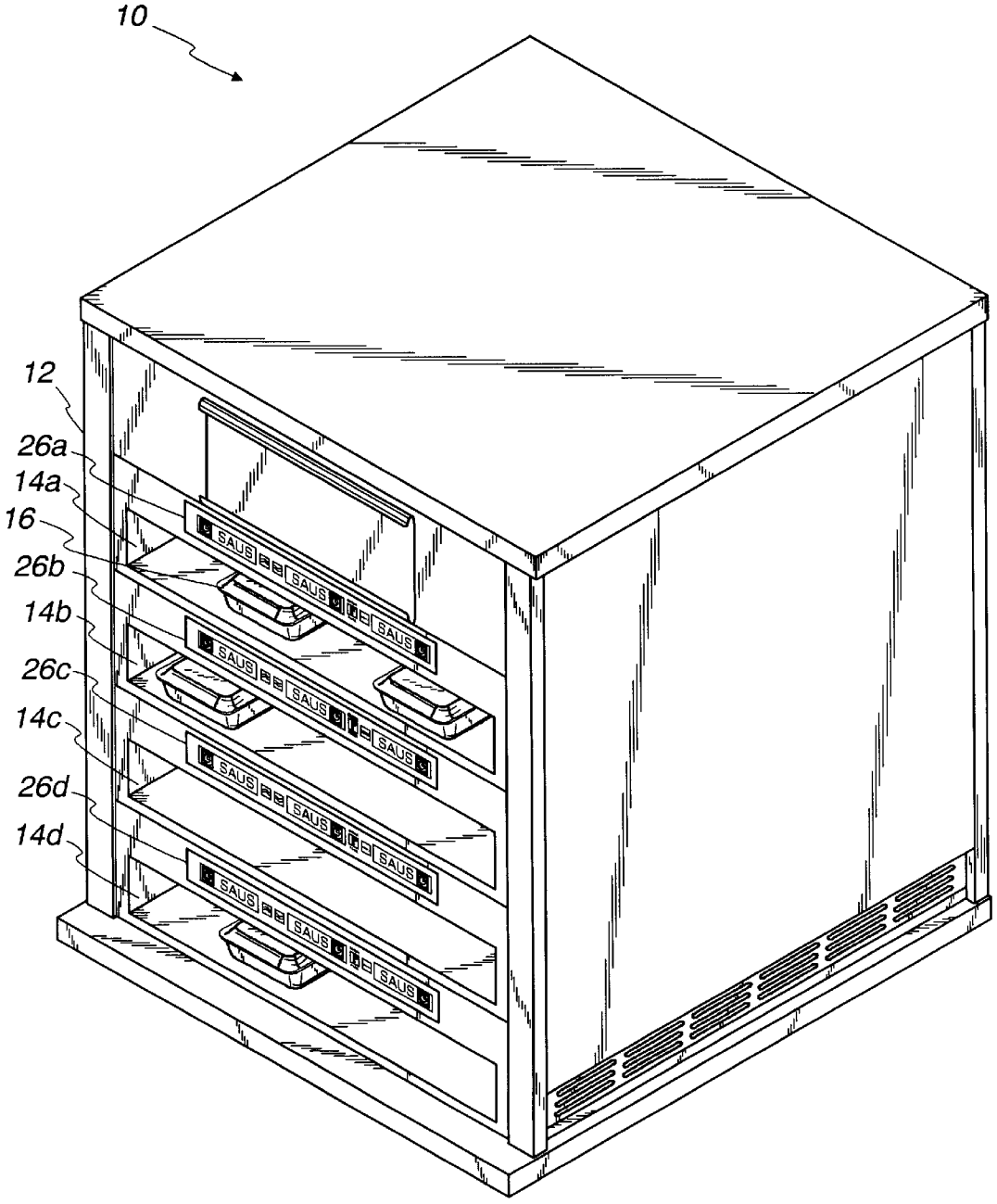

Fig. 1b

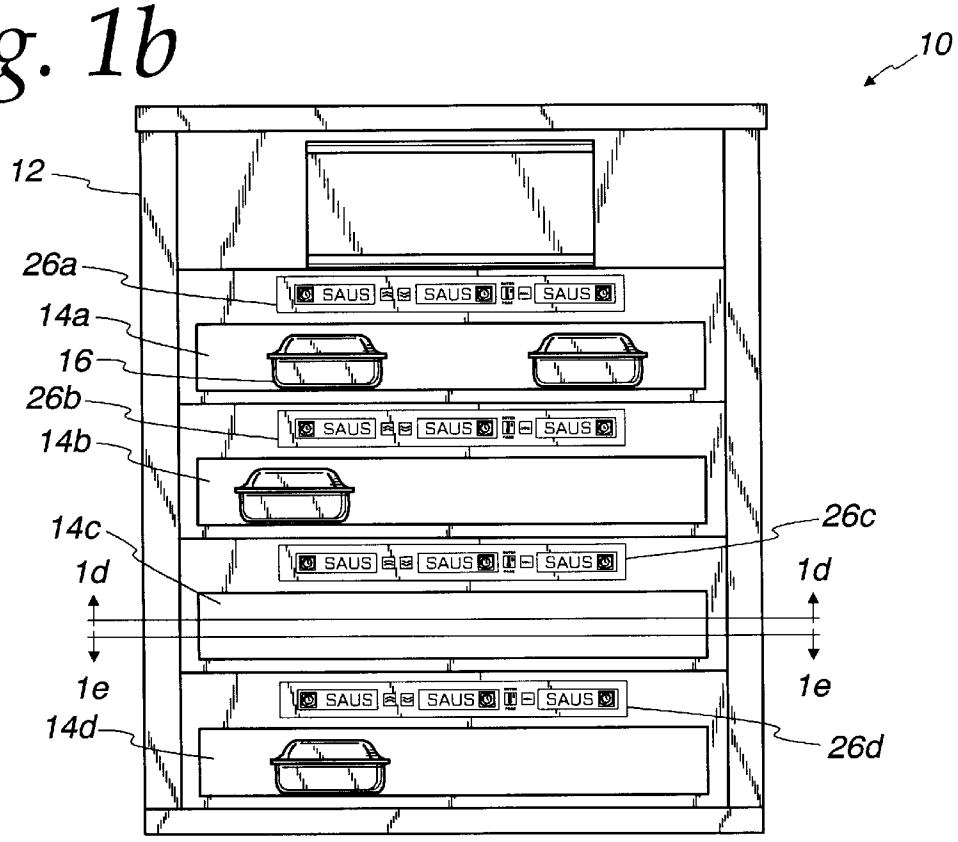
10
12
26a
14a
16
26b
14b
14c
1d
1e
14d
26c
1d
1e
26d
SAUS

Fig. 1c

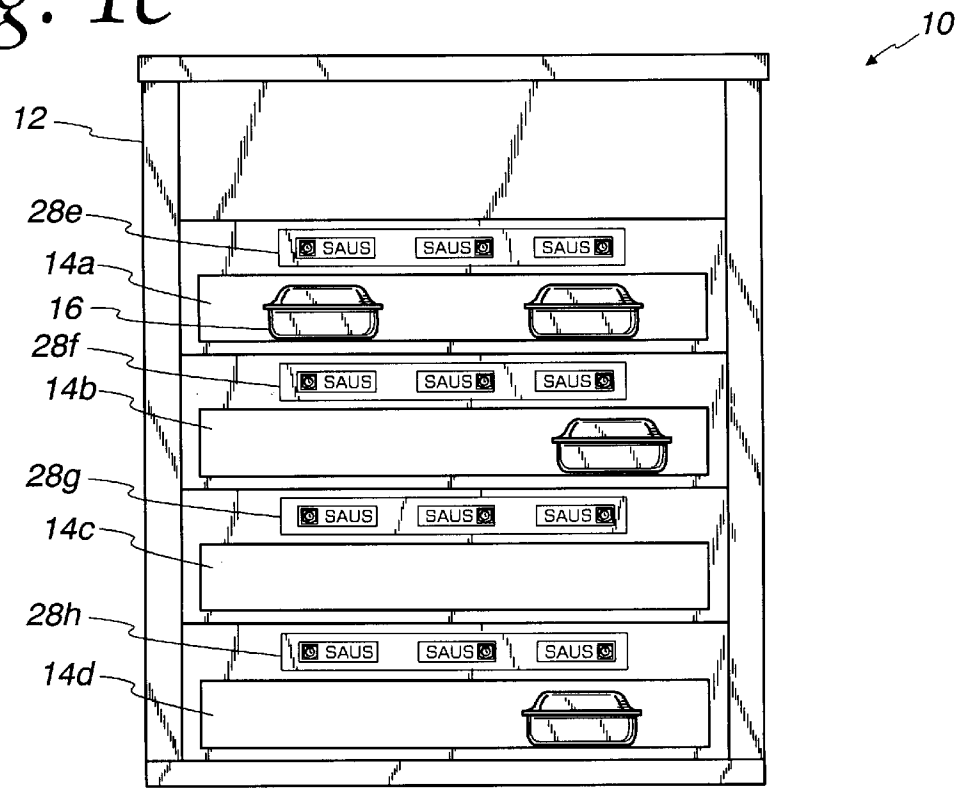
10
12
28e
14a
16
28f
14b
28g
14c
28h
14d
SAUS

Fig. 1d

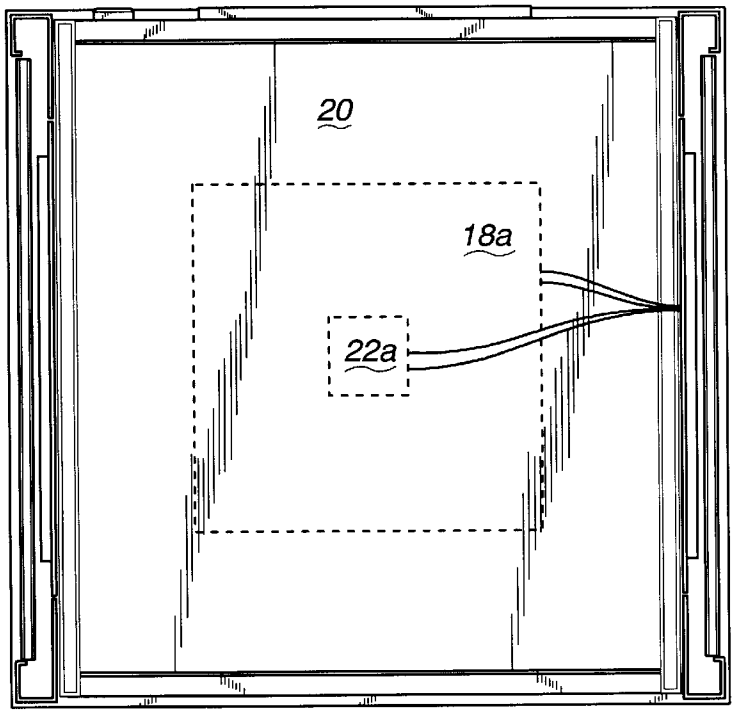

Fig. 1e

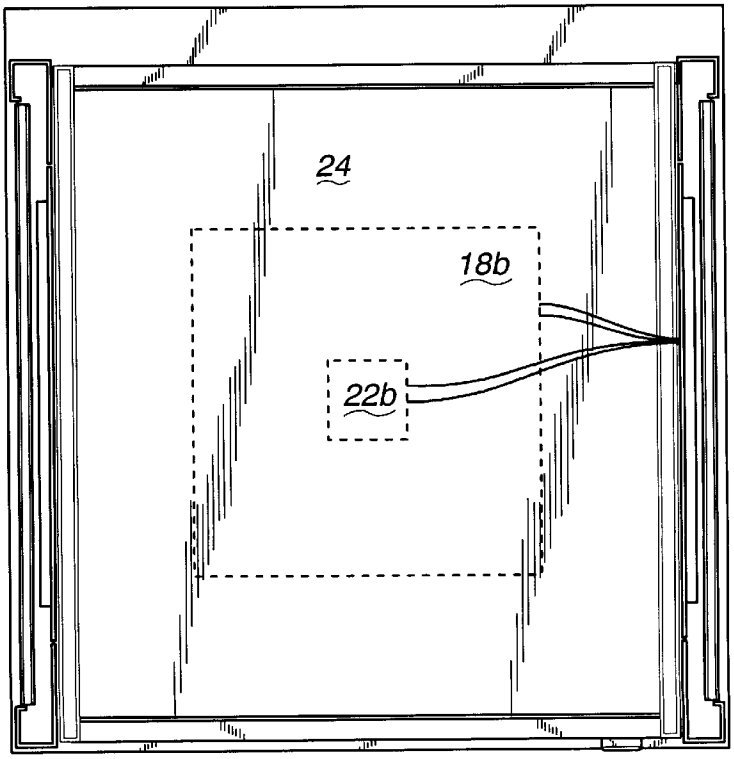

Fig. 1f

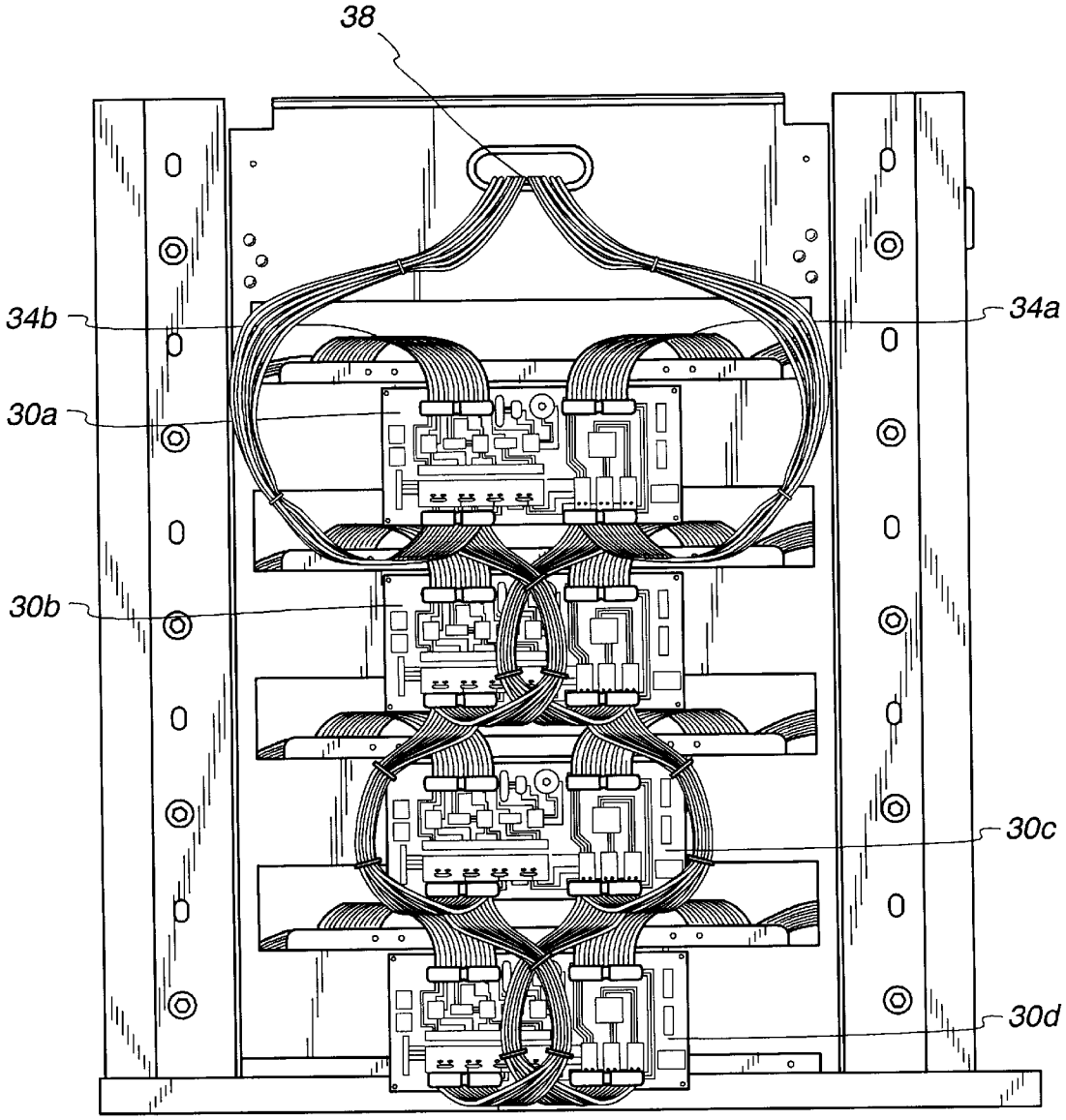

Fig. 1g

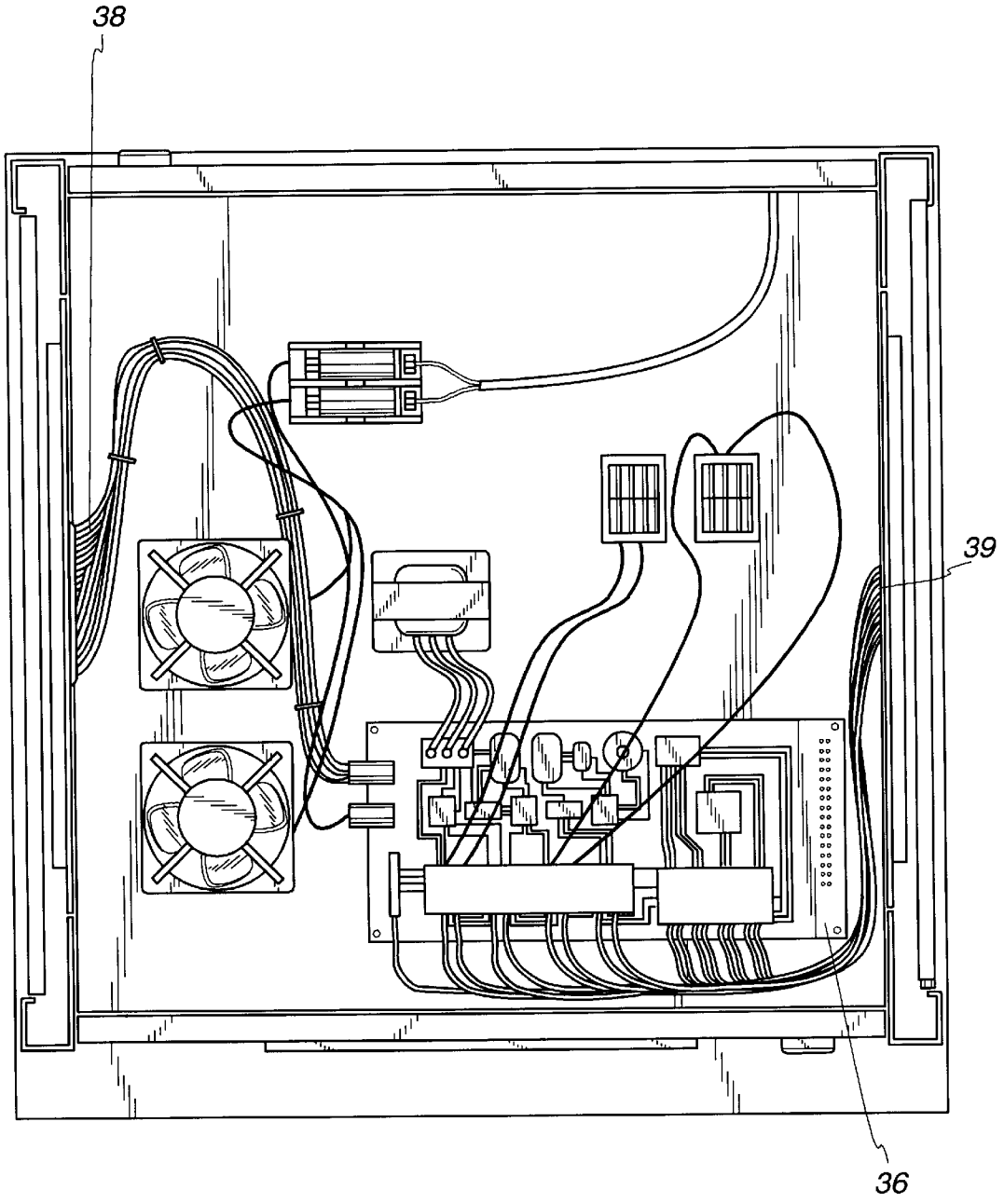

Fig. 2a

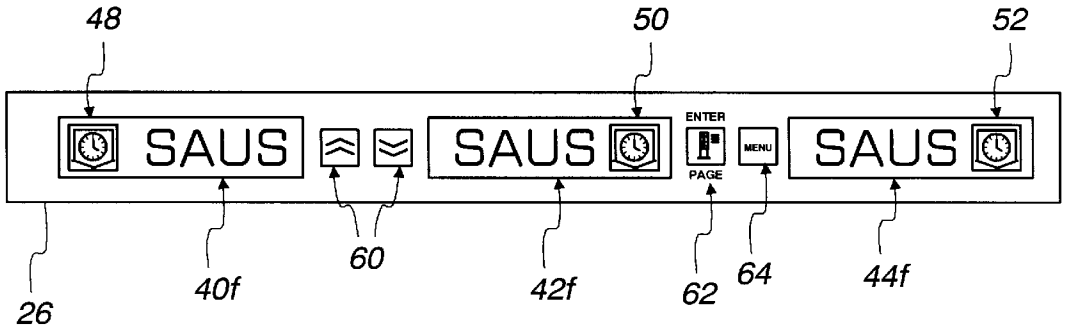

Fig. 2b

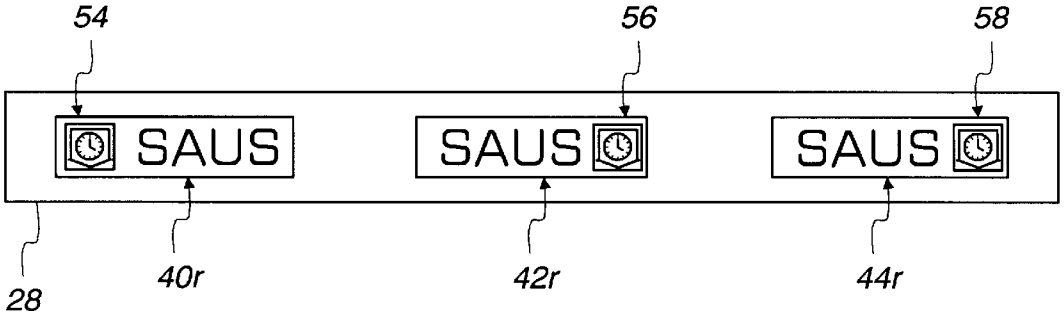

Fig. 2c

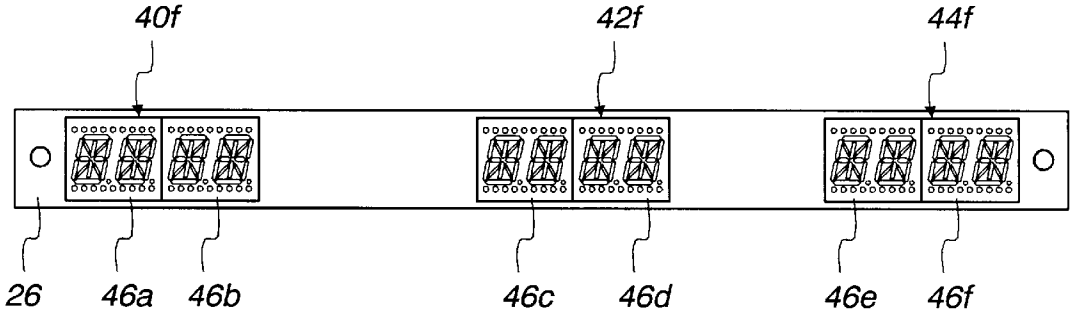

Fig. 3

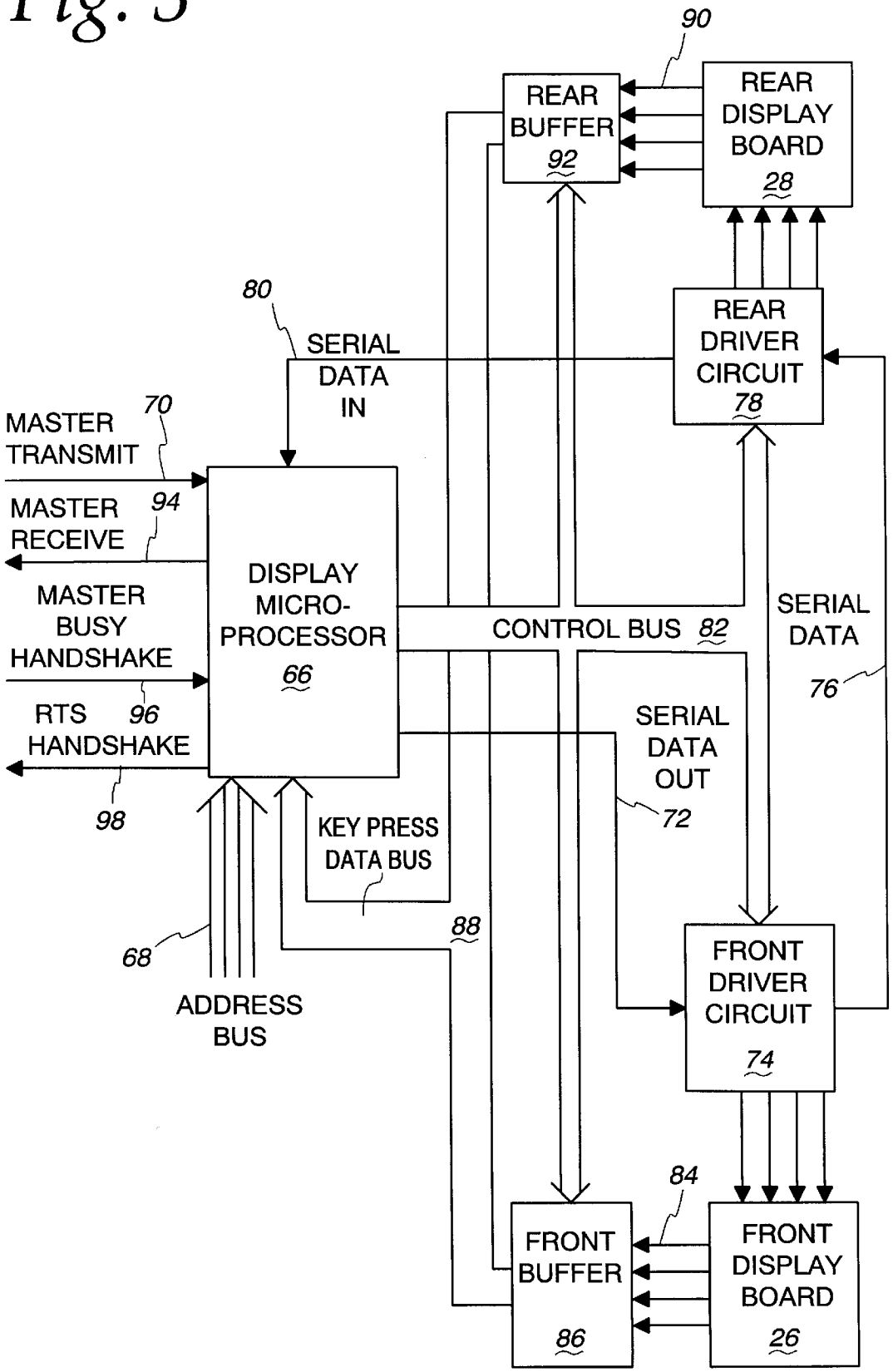
90
REAR BUFFER 92
REAR DISPLAY BOARD 28
80
SERIAL DATA IN
REAR DRIVER CIRCUIT 78
MASTER TRANSMIT
70
MASTER RECEIVE
94
MASTER BUSY HANDSHAKE
RTS HANDSHAKE
96
98
DISPLAY MICRO-PROCESSOR 66
CONTROL BUS 82
SERIAL DATA
76
SERIAL DATA OUT
72
KEY PRESS DATA BUS
88
68
ADDRESS BUS
FRONT DRIVER CIRCUIT 74
84
FRONT BUFFER 86
FRONT DISPLAY BOARD 26

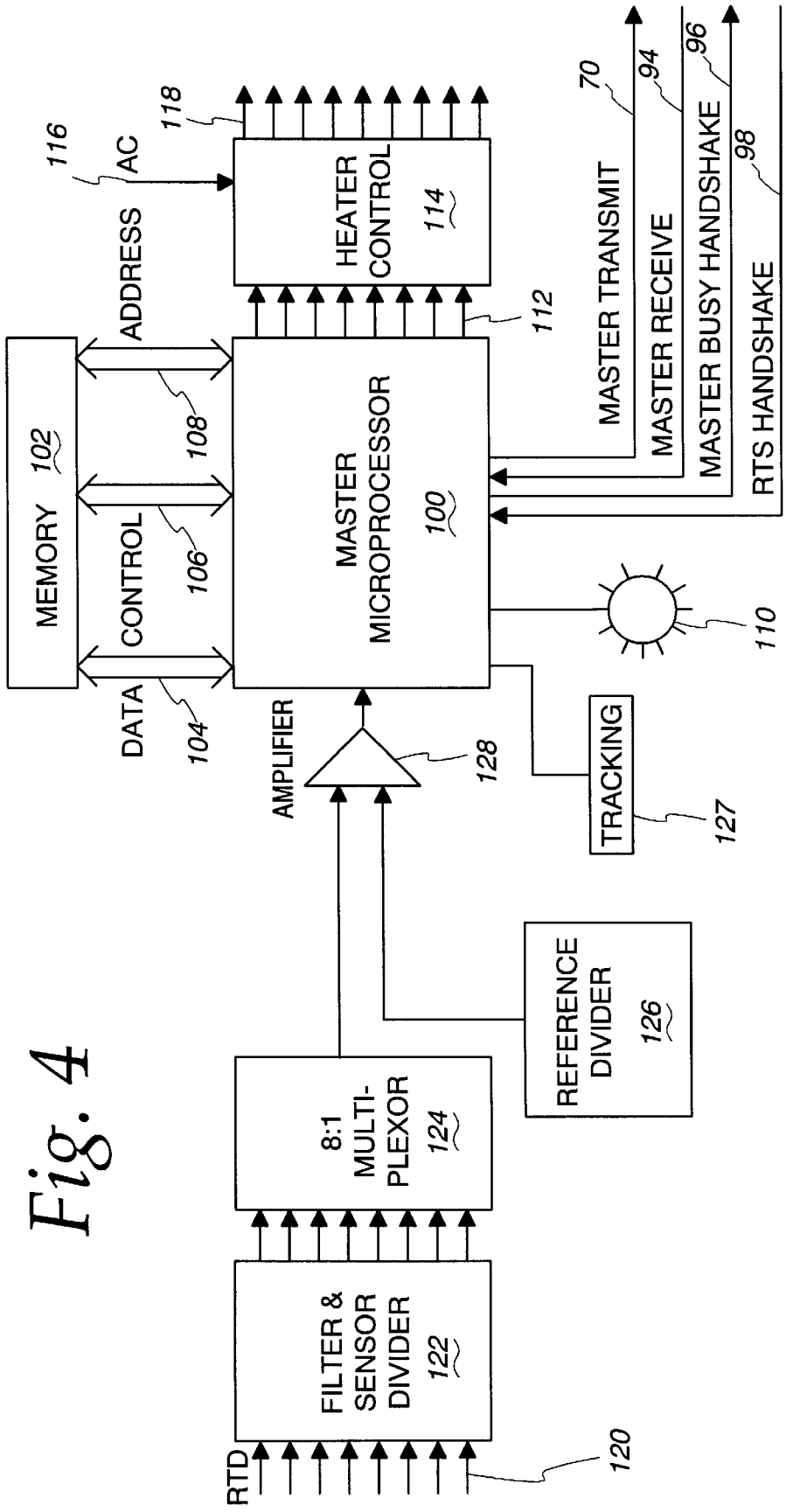
MEMORY
102
DATA
CONTROL
ADDRESS
104
106
108
116
AC
118
HEATER CONTROL
114
112
MASTER MICROPROCESSOR
100
MASTER TRANSMIT
MASTER RECEIVE
MASTER BUSY HANDSHAKE
RTS HANDSHAKE
70
94
96
98
110
TRACKING
127
AMPLIFIER
128
REFERENCE DIVIDER
126
8:1 MULTI-PLEXOR
124
FILTER & SENSOR DIVIDER
122
RTD
120

Fig. 4

Fig. 5

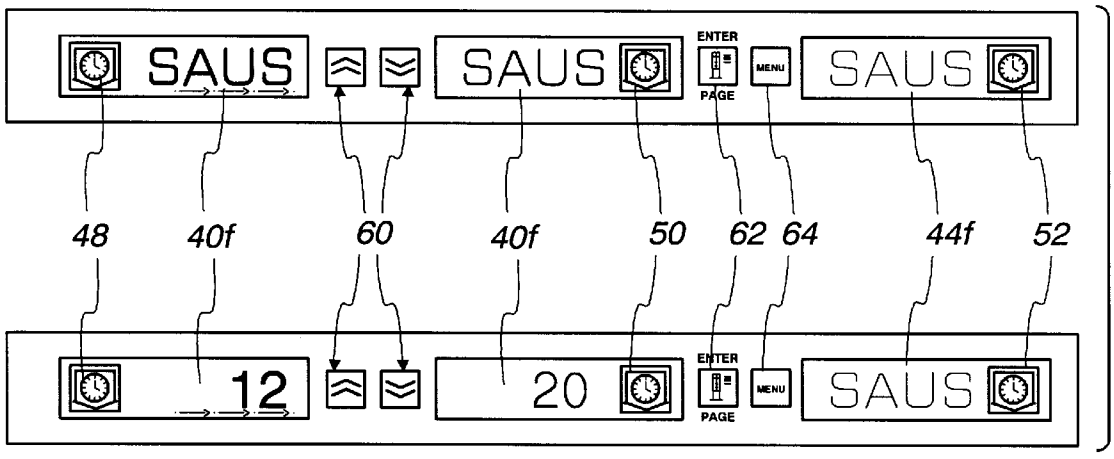
SAUS
SAUS
ENTER
PAGE
MENU
SAUS
48
40f
60
40f
50
62
64
44f
52
12
20
ENTER
PAGE
MENU
SAUS

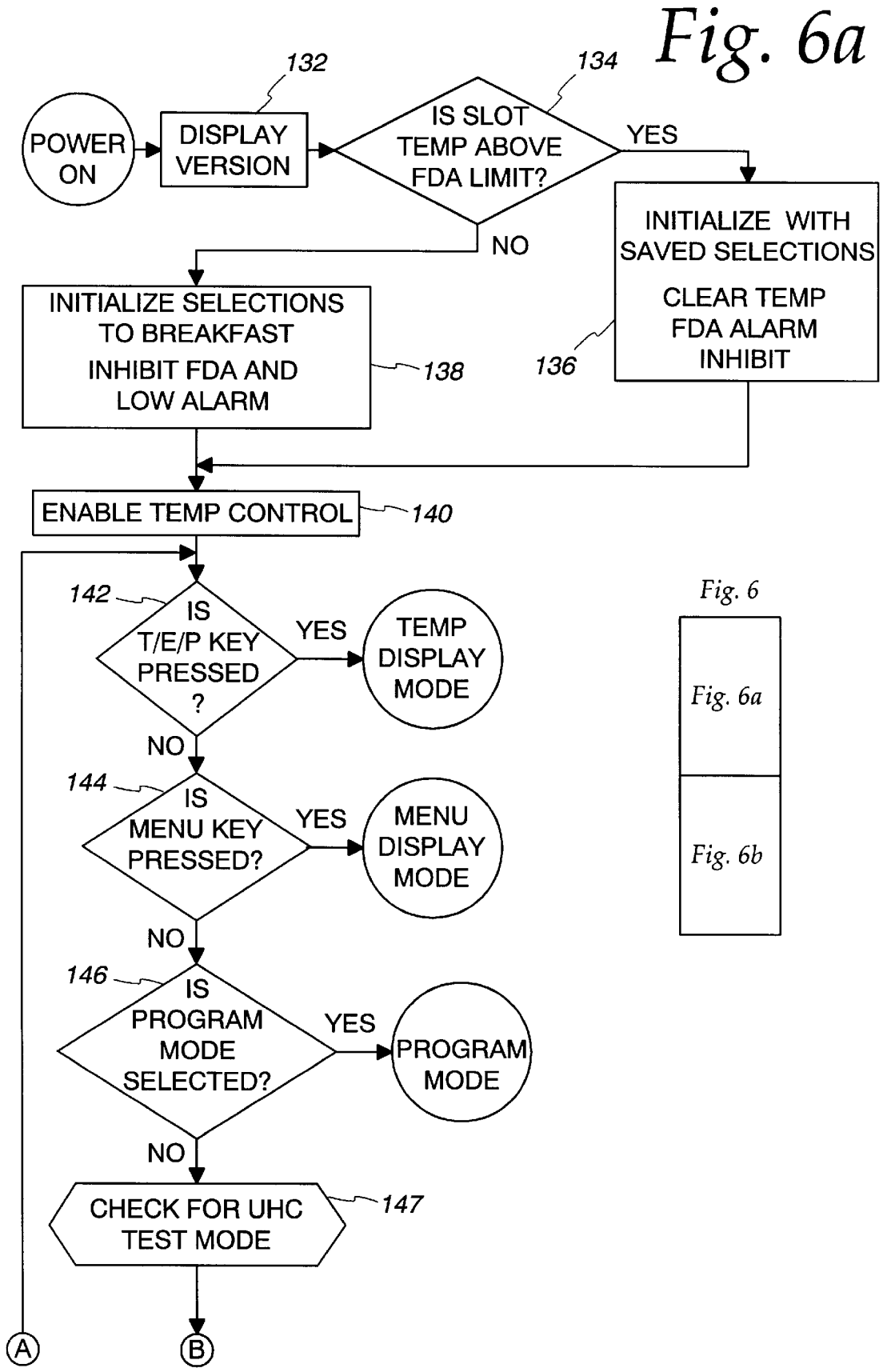
Fig. 6a
POWER ON
DISPLAY VERSION
132
IS SLOT TEMP ABOVE FDA LIMIT?
134
YES
NO
INITIALIZE WITH SAVED SELECTIONS
CLEAR TEMP FDA ALARM INHIBIT
136
INITIALIZE SELECTIONS TO BREAKFAST
INHIBIT FDA AND LOW ALARM
138
ENABLE TEMP CONTROL
140
IS T/E/P KEY PRESSED ?
142
YES
TEMP DISPLAY MODE
NO
IS MENU KEY PRESSED?
144
YES
MENU DISPLAY MODE
NO
IS PROGRAM MODE SELECTED?
146
YES
PROGRAM MODE
NO
CHECK FOR UHC TEST MODE
147
A
B

Fig. 6
Fig. 6a
Fig. 6b

Fig. 6b

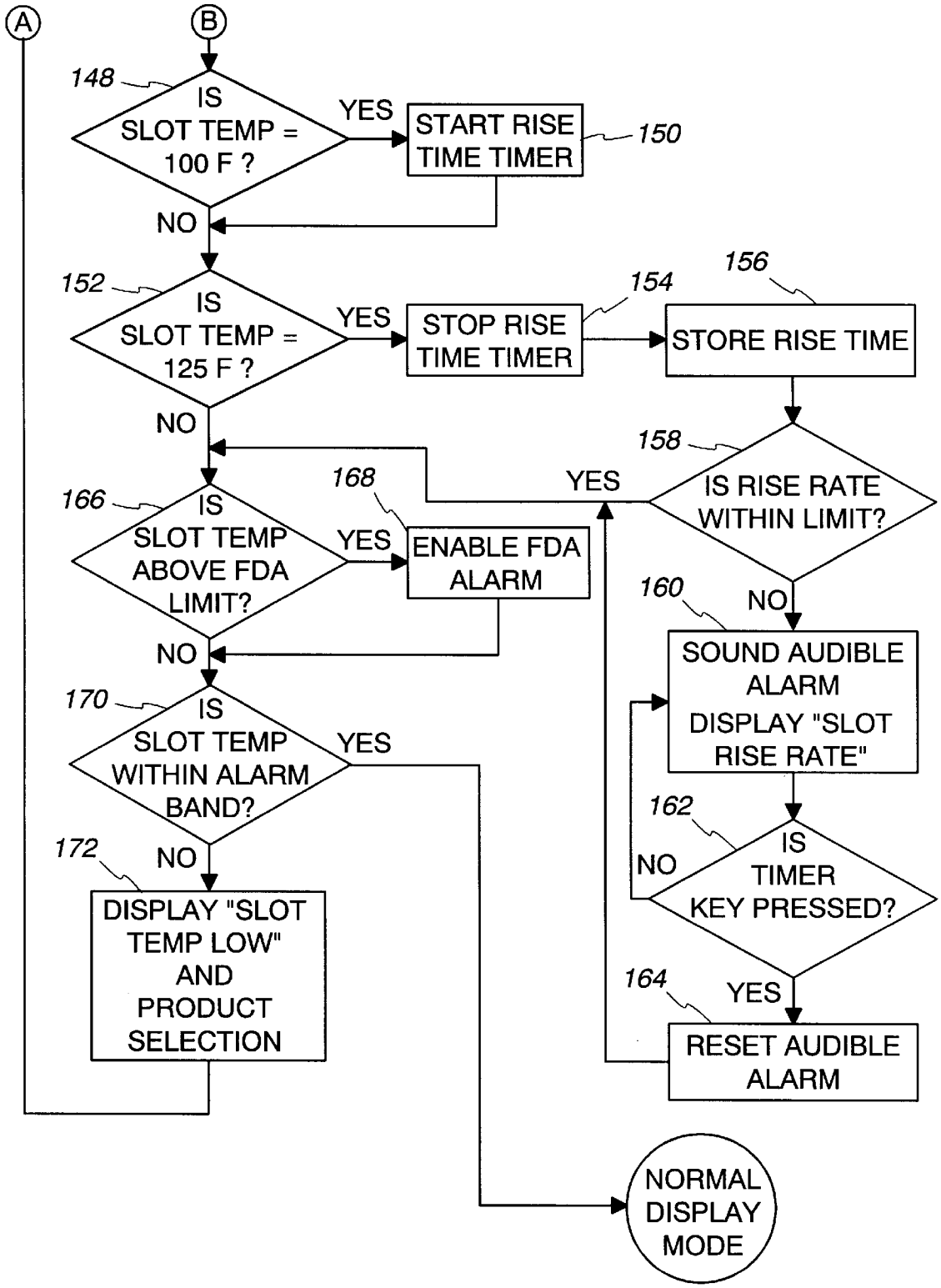
A
B
148
IS SLOT TEMP = 100 F ?
YES
START RISE TIME TIMER
150
NO
152
IS SLOT TEMP = 125 F ?
YES
STOP RISE TIME TIMER
154
156
STORE RISE TIME
NO
158
IS RISE RATE WITHIN LIMIT?
YES
168
166
IS SLOT TEMP ABOVE FDA LIMIT?
YES
ENABLE FDA ALARM
160
NO
NO
SOUND AUDIBLE ALARM
DISPLAY "SLOT RISE RATE"
170
IS SLOT TEMP WITHIN ALARM BAND?
YES
162
IS TIMER KEY PRESSED?
NO
172
NO
DISPLAY "SLOT TEMP LOW" AND PRODUCT SELECTION
164
YES
RESET AUDIBLE ALARM
NORMAL DISPLAY MODE

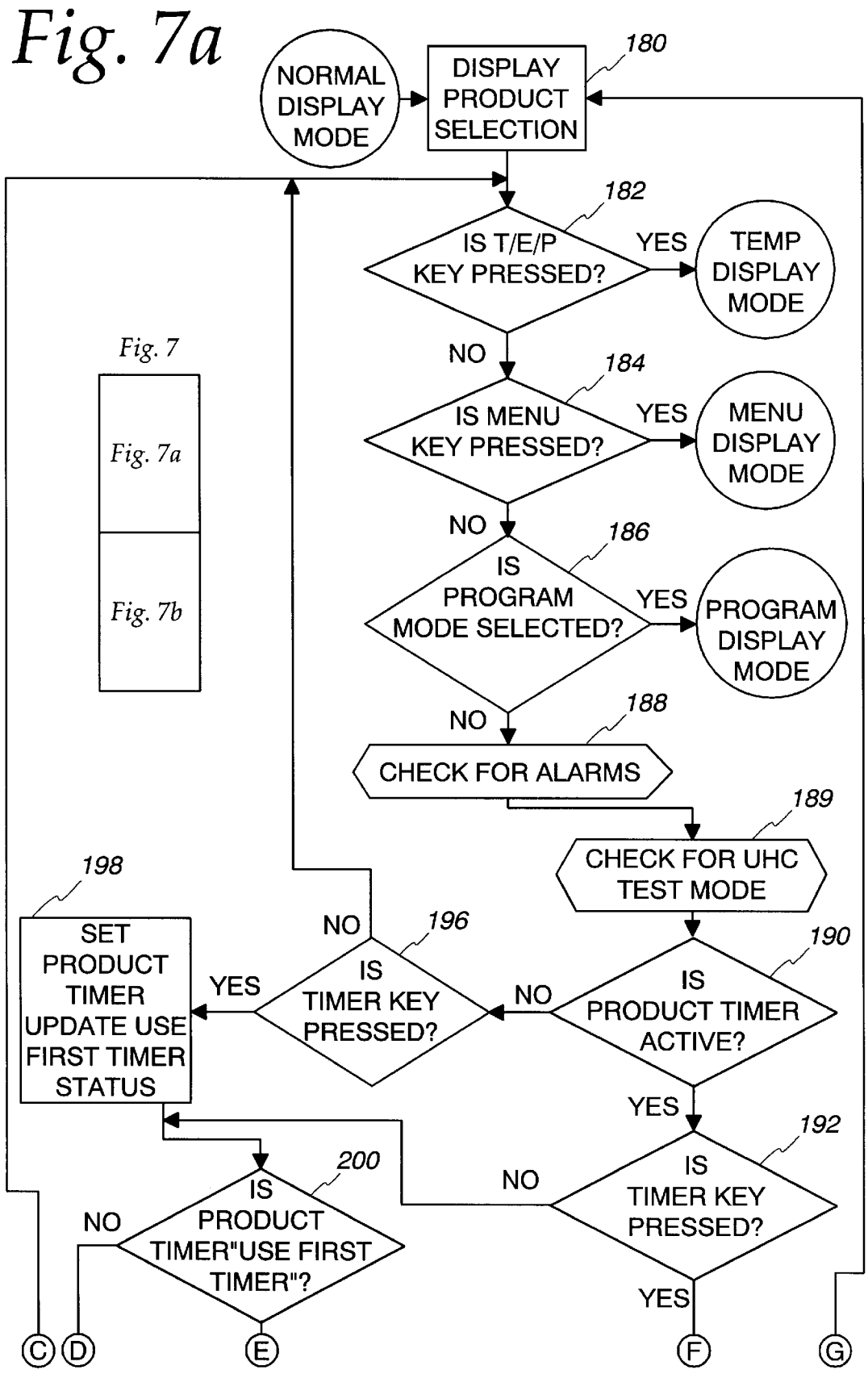
Fig. 7a
NORMAL DISPLAY MODE
DISPLAY PRODUCT SELECTION
180
182
IS T/E/P KEY PRESSED?
YES
TEMP DISPLAY MODE
NO
184
IS MENU KEY PRESSED?
YES
MENU DISPLAY MODE
NO
186
IS PROGRAM MODE SELECTED?
YES
PROGRAM DISPLAY MODE
NO
188
CHECK FOR ALARMS
189
CHECK FOR UHC TEST MODE
190
IS PRODUCT TIMER ACTIVE?
NO
196
IS TIMER KEY PRESSED?
YES
NO
198
SET PRODUCT TIMER UPDATE USE FIRST TIMER STATUS
YES
192
IS TIMER KEY PRESSED?
NO
YES
200
IS PRODUCT TIMER"USE FIRST TIMER"?
NO
C
D
E
F
G
Fig. 7
Fig. 7a
Fig. 7b

Fig. 7b

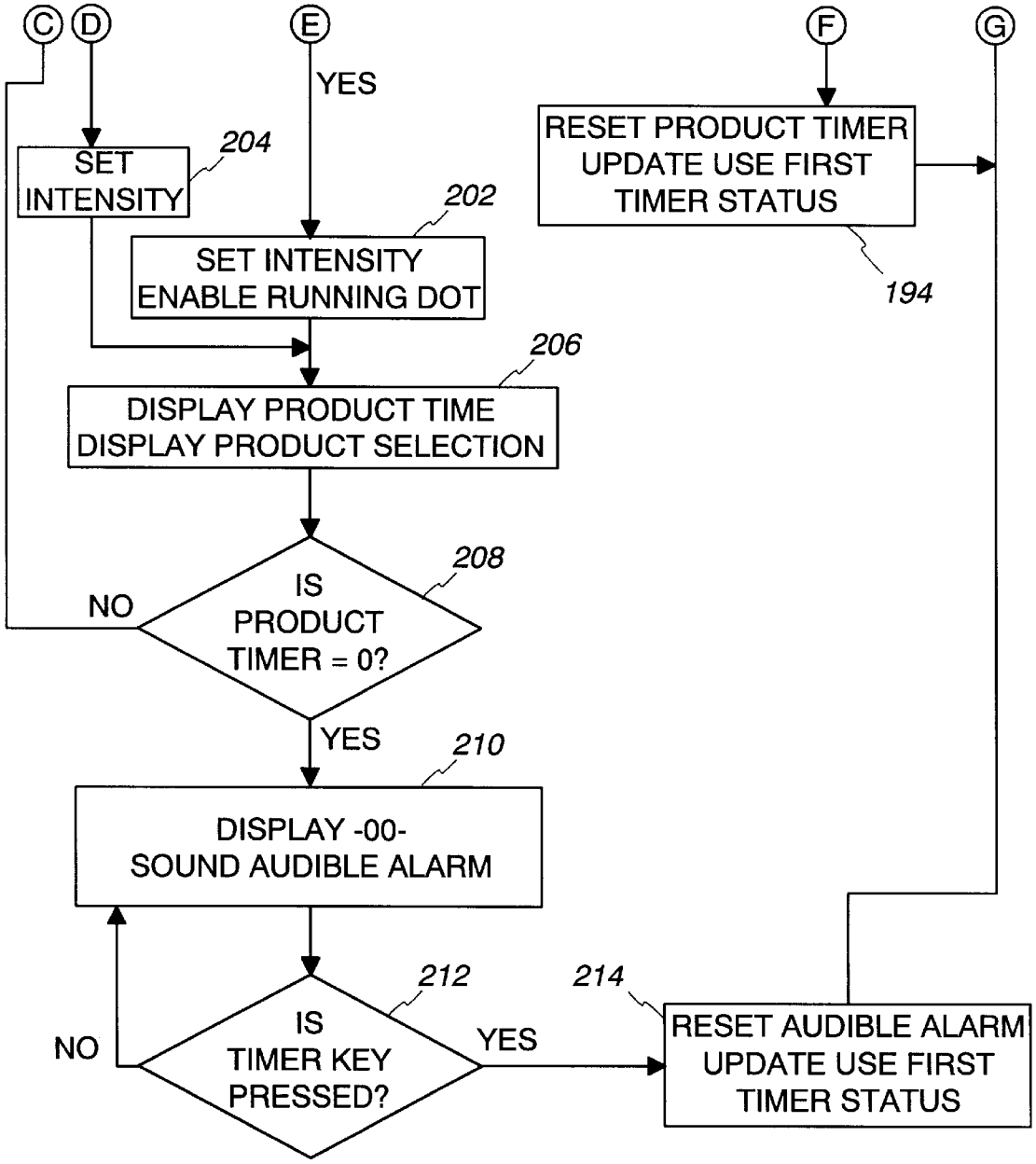
C
D
E
F
G
YES
SET INTENSITY
204
202
SET INTENSITY ENABLE RUNNING DOT
RESET PRODUCT TIMER UPDATE USE FIRST TIMER STATUS
194
206
DISPLAY PRODUCT TIME DISPLAY PRODUCT SELECTION
208
IS PRODUCT TIMER = 0?
NO
YES
210
DISPLAY -00- SOUND AUDIBLE ALARM
212
IS TIMER KEY PRESSED?
NO
YES
214
RESET AUDIBLE ALARM UPDATE USE FIRST TIMER STATUS

Fig. 8a

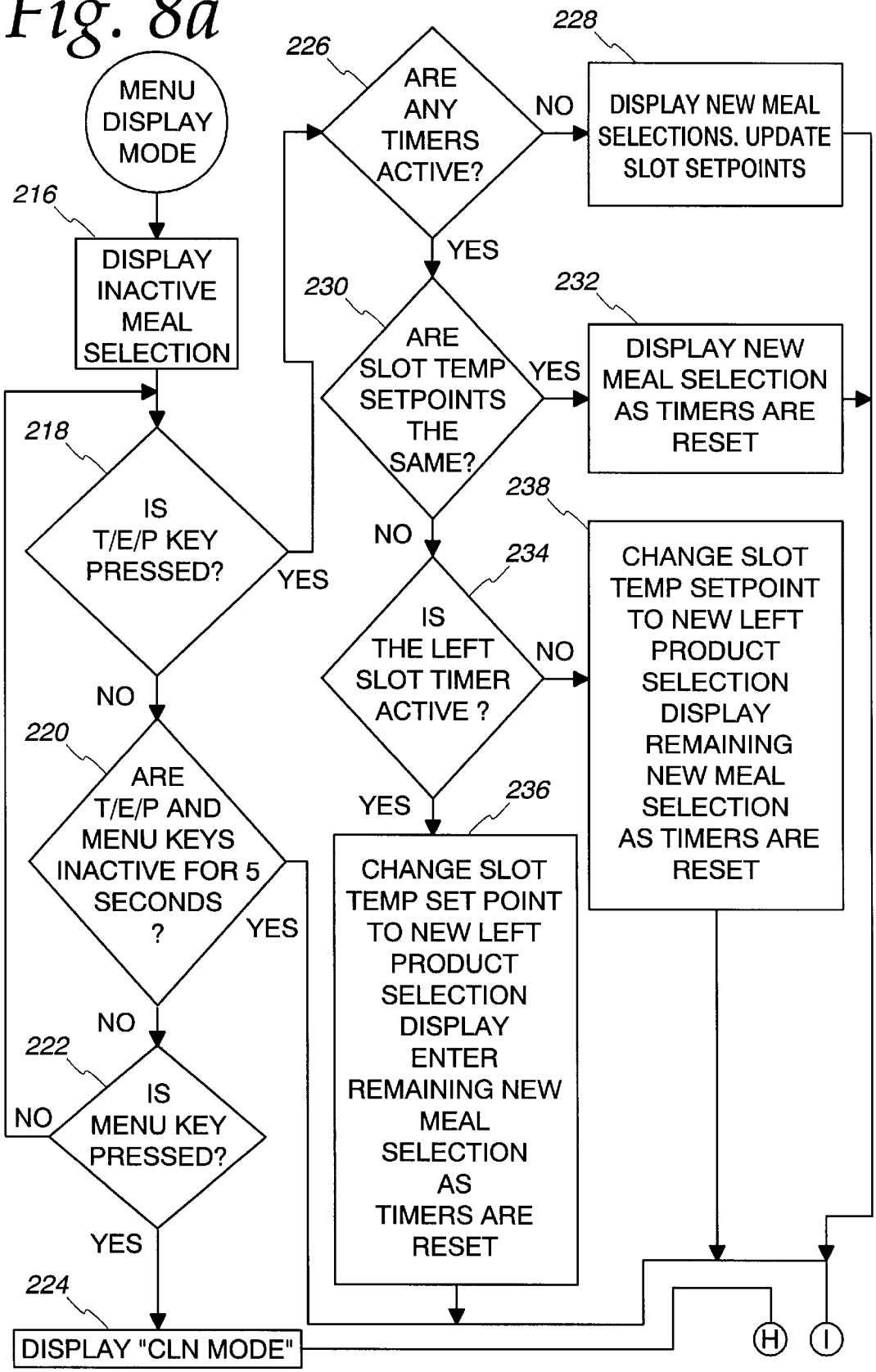
MENU DISPLAY MODE
216
DISPLAY INACTIVE MEAL SELECTION
218
IS T/E/P KEY PRESSED?
YES
NO
220
ARE T/E/P AND MENU KEYS INACTIVE FOR 5 SECONDS ?
YES
NO
222
IS MENU KEY PRESSED?
NO
YES
224
DISPLAY "CLN MODE"
226
ARE ANY TIMERS ACTIVE?
NO
YES
228
DISPLAY NEW MEAL SELECTIONS. UPDATE SLOT SETPOINTS
230
ARE SLOT TEMP SETPOINTS THE SAME?
YES
NO
232
DISPLAY NEW MEAL SELECTION AS TIMERS ARE RESET
234
IS THE LEFT SLOT TIMER ACTIVE ?
NO
YES
236
CHANGE SLOT TEMP SET POINT TO NEW LEFT PRODUCT SELECTION DISPLAY ENTER REMAINING NEW MEAL SELECTION AS TIMERS ARE RESET
238
CHANGE SLOT TEMP SETPOINT TO NEW LEFT PRODUCT SELECTION DISPLAY REMAINING NEW MEAL SELECTION AS TIMERS ARE RESET
H
I

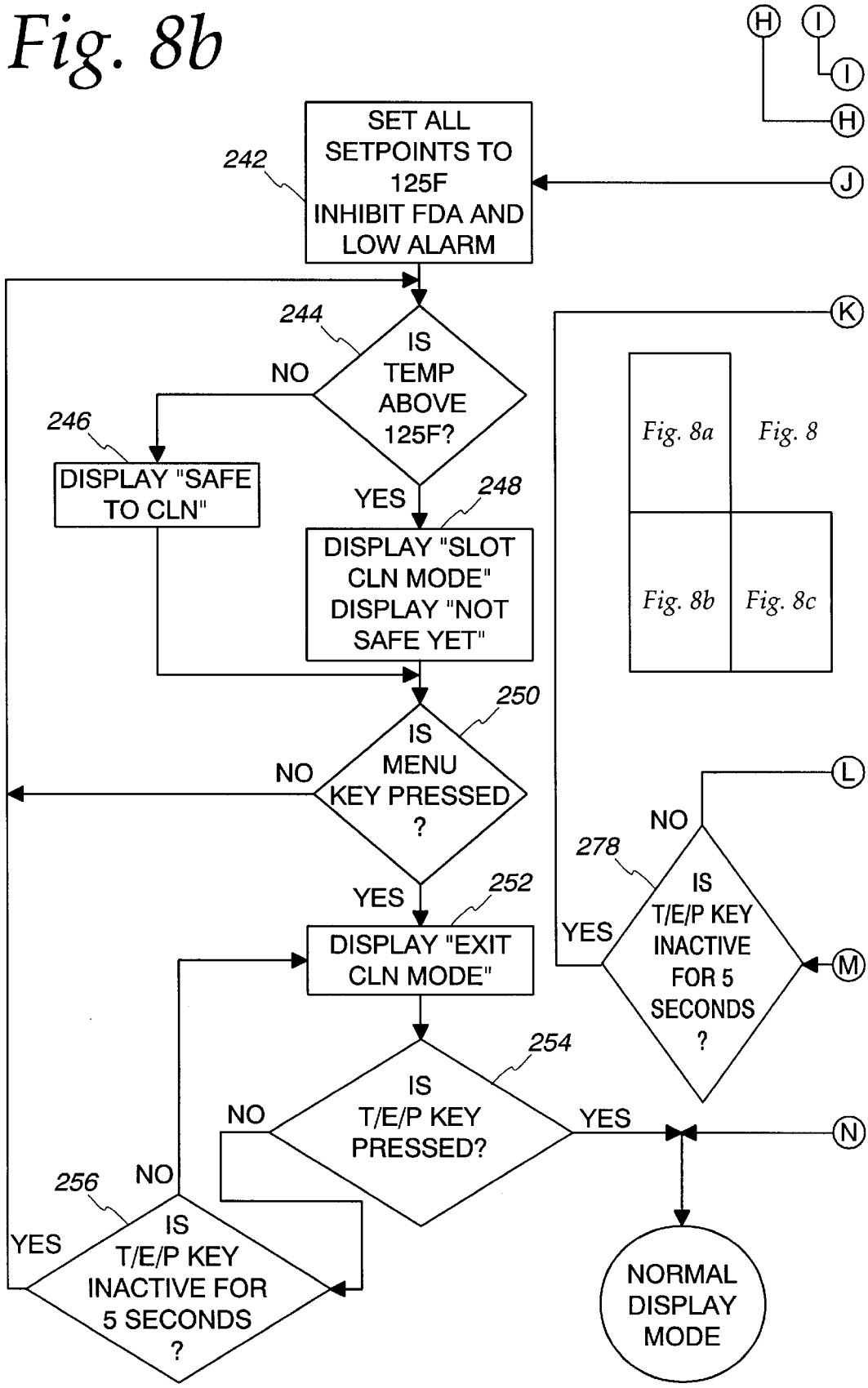
Fig. 8b
H
I
I
H
J
K
L
M
N
242
SET ALL SETPOINTS TO 125F INHIBIT FDA AND LOW ALARM
244
IS TEMP ABOVE 125F?
NO
YES
246
DISPLAY "SAFE TO CLN"
248
DISPLAY "SLOT CLN MODE" DISPLAY "NOT SAFE YET"
250
IS MENU KEY PRESSED ?
NO
YES
252
DISPLAY "EXIT CLN MODE"
254
IS T/E/P KEY PRESSED?
NO
YES
256
IS T/E/P KEY INACTIVE FOR 5 SECONDS ?
NO
YES
278
IS T/E/P KEY INACTIVE FOR 5 SECONDS ?
NO
YES
NORMAL DISPLAY MODE
Fig. 8a
Fig. 8
Fig. 8b
Fig. 8c

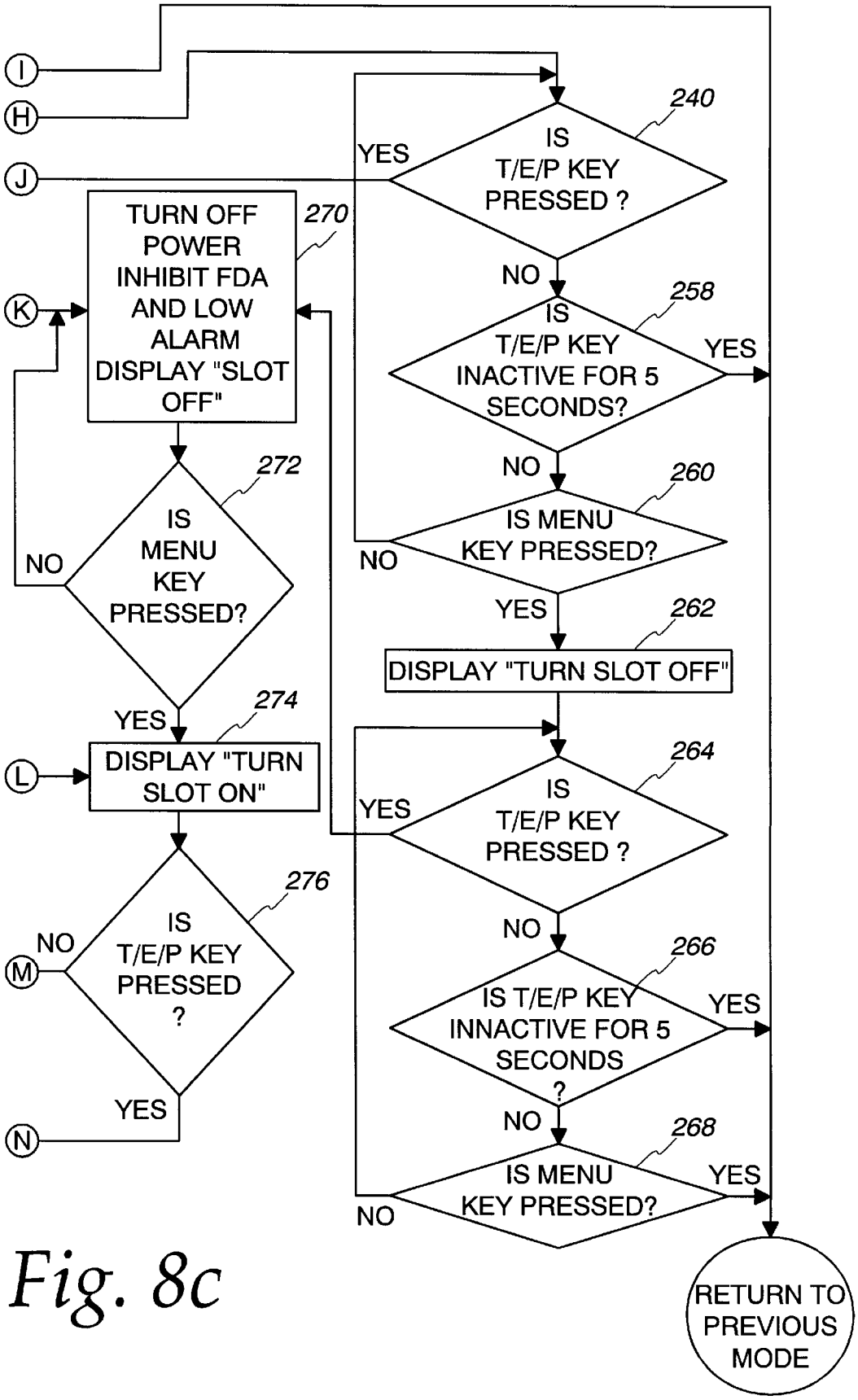
I
H
J
K
L
M
N
240
IS T/E/P KEY PRESSED ?
YES
NO
258
IS T/E/P KEY INACTIVE FOR 5 SECONDS?
YES
NO
260
IS MENU KEY PRESSED?
NO
YES
262
DISPLAY "TURN SLOT OFF"
264
IS T/E/P KEY PRESSED ?
YES
NO
266
IS T/E/P KEY INNACTIVE FOR 5 SECONDS ?
YES
NO
268
IS MENU KEY PRESSED?
YES
NO
270
TURN OFF POWER INHIBIT FDA AND LOW ALARM DISPLAY "SLOT OFF"
272
IS MENU KEY PRESSED?
NO
YES
274
DISPLAY "TURN SLOT ON"
276
IS T/E/P KEY PRESSED ?
NO
YES
RETURN TO PREVIOUS MODE

Fig. 8c

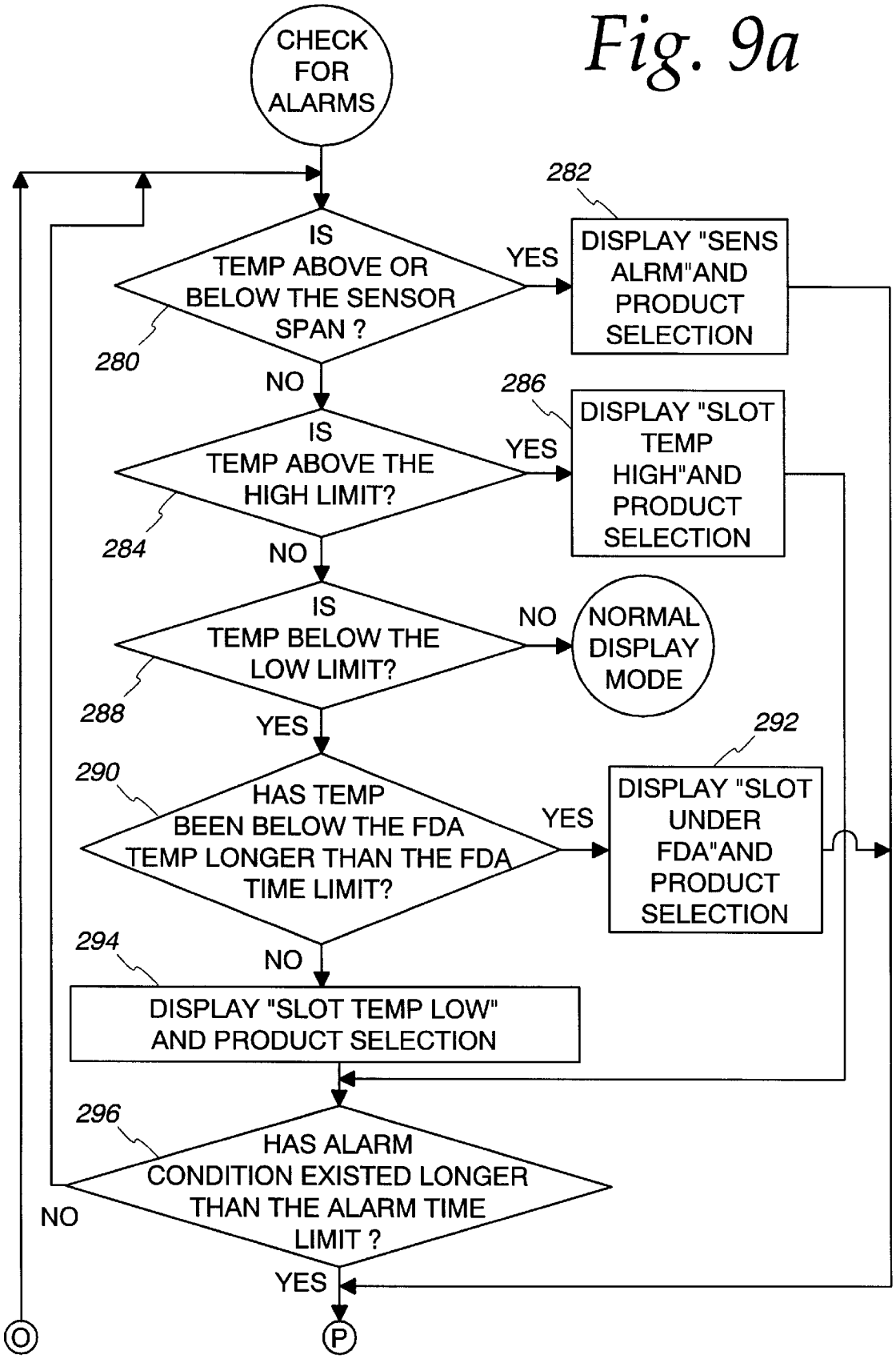
Fig. 9a
CHECK FOR ALARMS
IS TEMP ABOVE OR BELOW THE SENSOR SPAN ?
280
YES
282
DISPLAY "SENS ALRM"AND PRODUCT SELECTION
NO
IS TEMP ABOVE THE HIGH LIMIT?
284
YES
286
DISPLAY "SLOT TEMP HIGH"AND PRODUCT SELECTION
NO
IS TEMP BELOW THE LOW LIMIT?
288
NO
NORMAL DISPLAY MODE
YES
HAS TEMP BEEN BELOW THE FDA TEMP LONGER THAN THE FDA TIME LIMIT?
290
YES
292
DISPLAY "SLOT UNDER FDA"AND PRODUCT SELECTION
NO
294
DISPLAY "SLOT TEMP LOW" AND PRODUCT SELECTION
HAS ALARM CONDITION EXISTED LONGER THAN THE ALARM TIME LIMIT ?
296
NO
YES
O
P

Fig. 9b

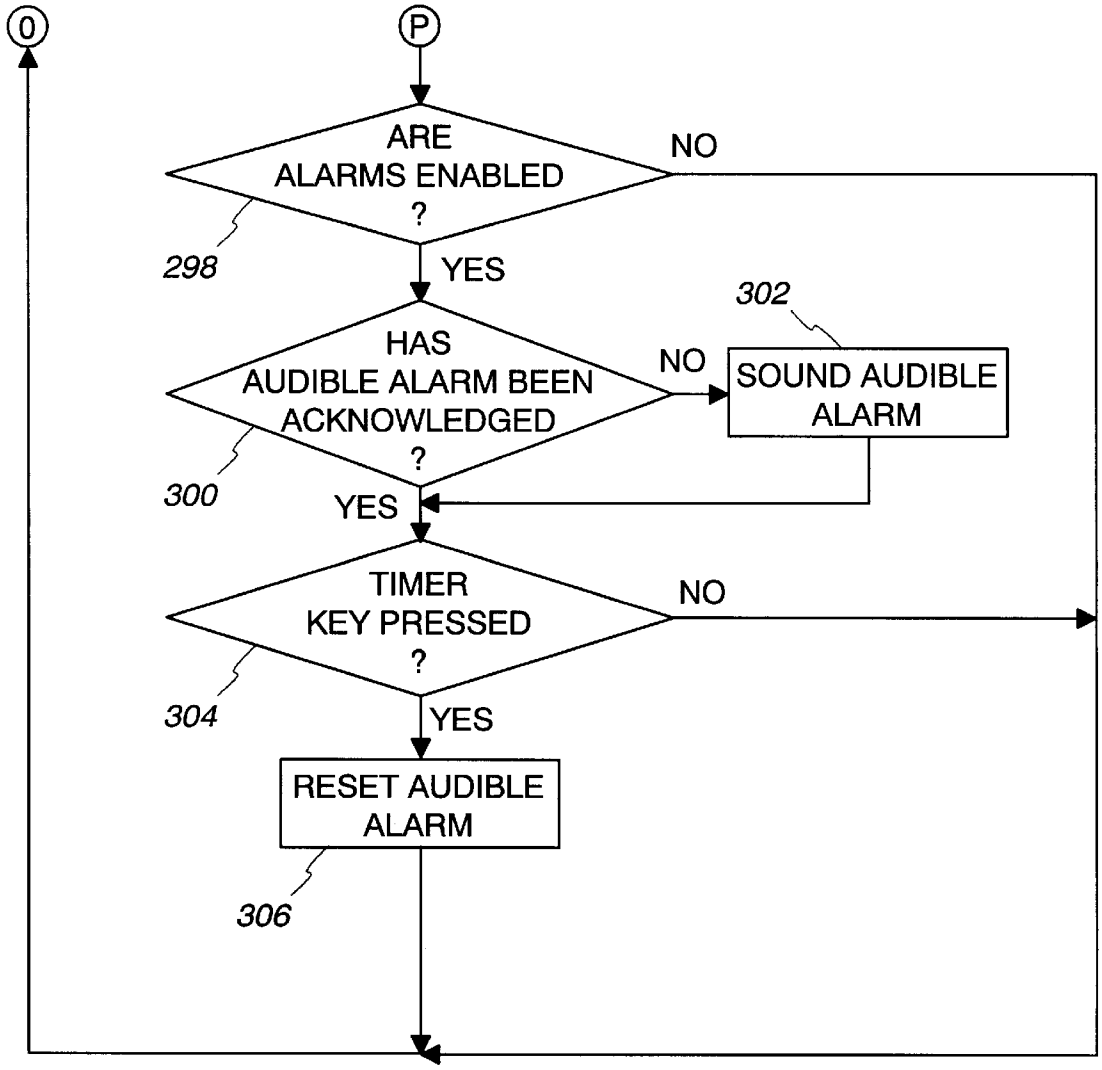
0
P
ARE ALARMS ENABLED ?
NO
298
YES
302
HAS AUDIBLE ALARM BEEN ACKNOWLEDGED ?
NO
SOUND AUDIBLE ALARM
300
YES
TIMER KEY PRESSED ?
NO
304
YES
RESET AUDIBLE ALARM
306

Fig. 9

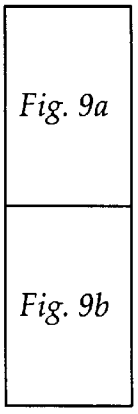
Fig. 9a
Fig. 9b

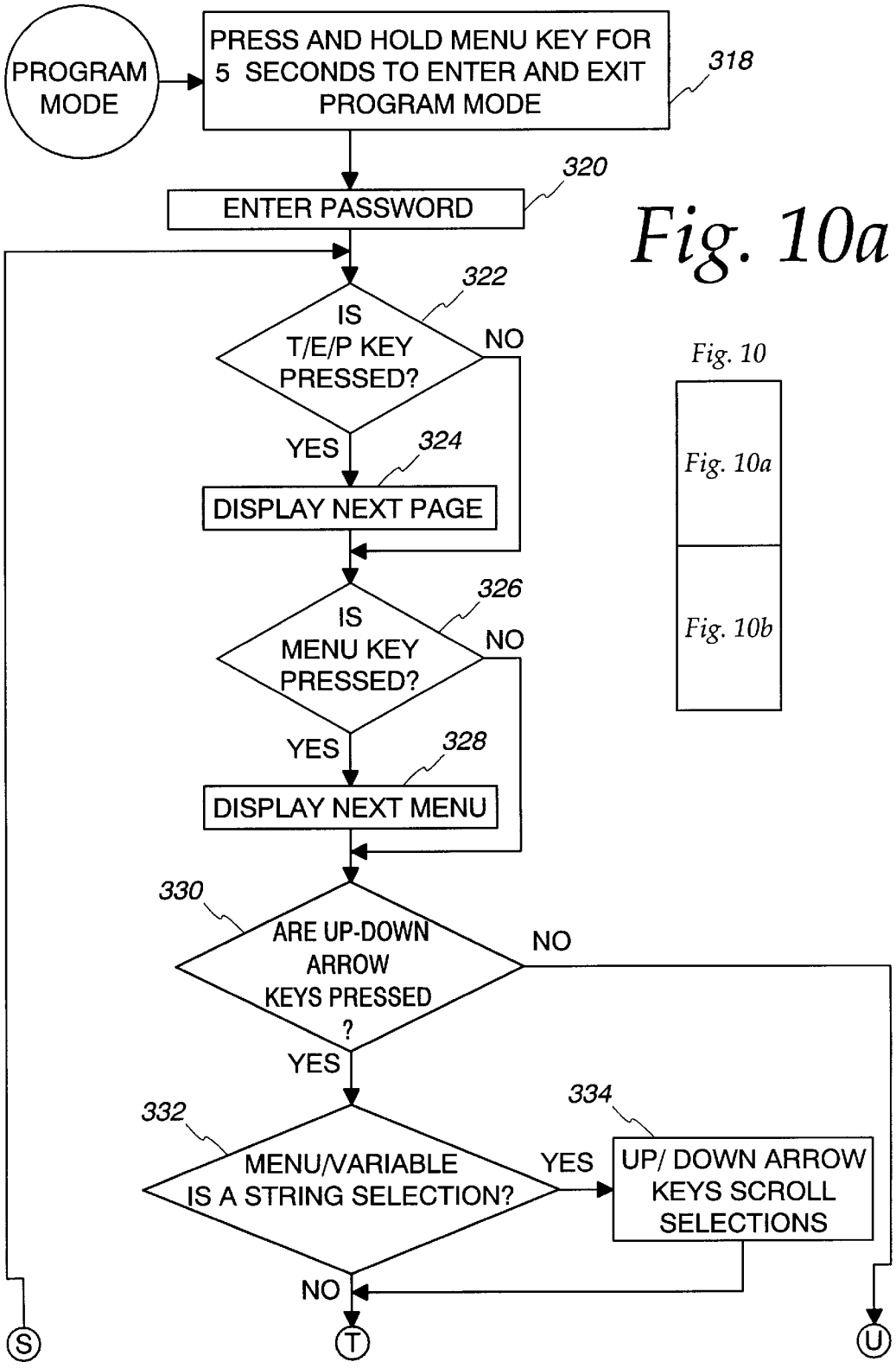

Fig. 10a

Fig. 10

Fig. 10b

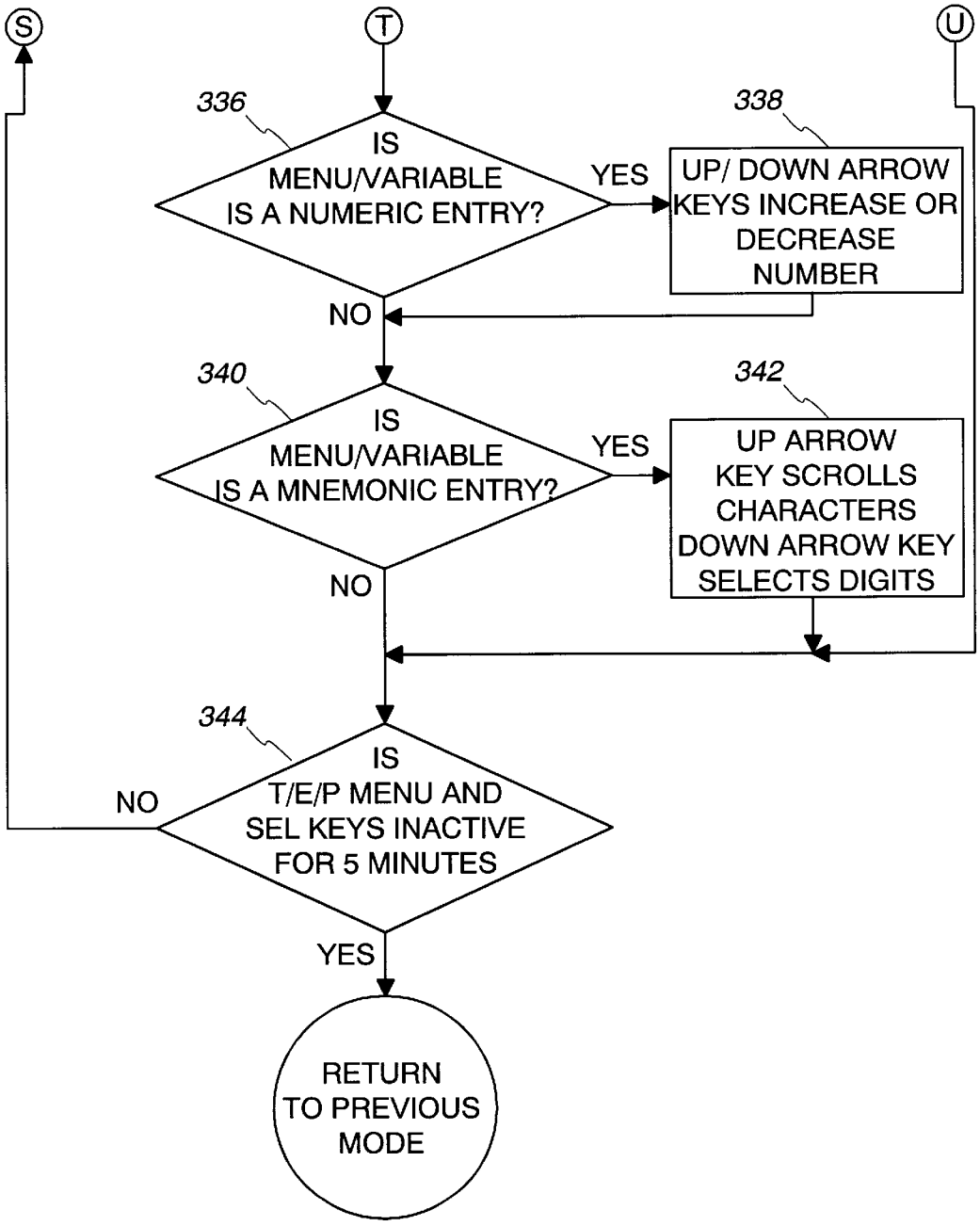
S
T
U
336
IS MENU/VARIABLE IS A NUMERIC ENTRY?
YES
338
UP/ DOWN ARROW KEYS INCREASE OR DECREASE NUMBER
NO
340
IS MENU/VARIABLE IS A MNEMONIC ENTRY?
YES
342
UP ARROW KEY SCROLLS CHARACTERS DOWN ARROW KEY SELECTS DIGITS
NO
344
IS T/E/P MENU AND SEL KEYS INACTIVE FOR 5 MINUTES
NO
YES
RETURN TO PREVIOUS MODE

Fig. 11a

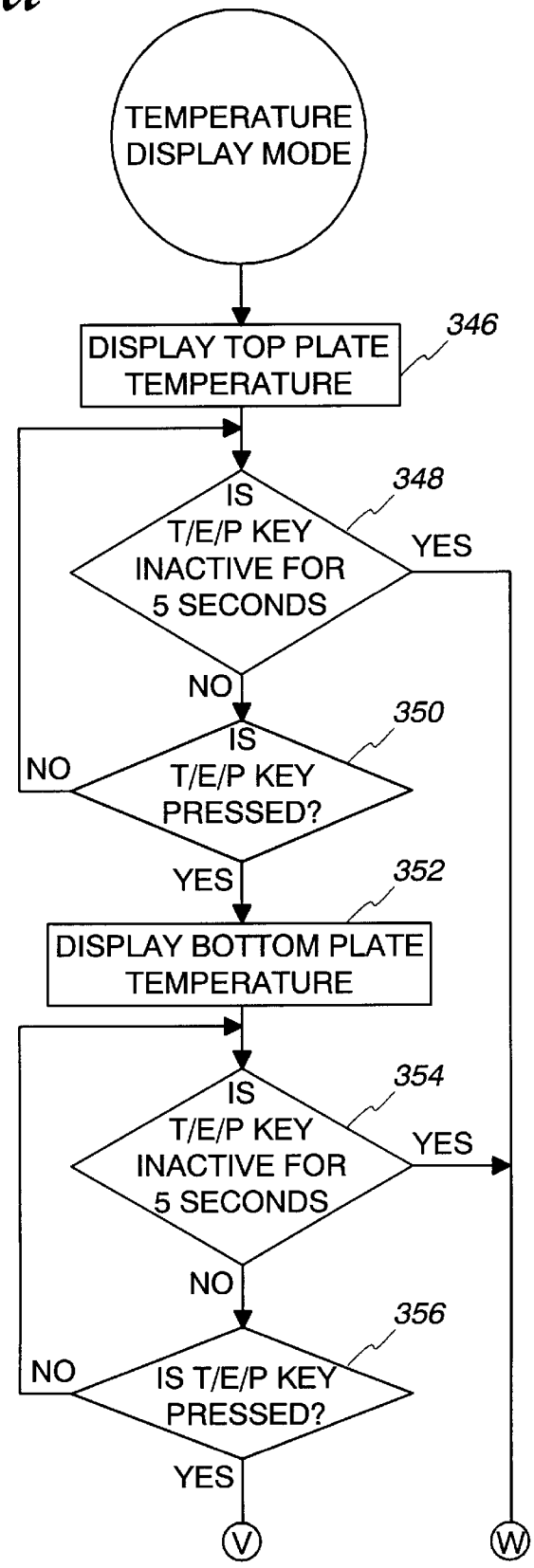
TEMPERATURE DISPLAY MODE
DISPLAY TOP PLATE TEMPERATURE
346
IS T/E/P KEY INACTIVE FOR 5 SECONDS
348
YES
NO
IS T/E/P KEY PRESSED?
350
NO
YES
DISPLAY BOTTOM PLATE TEMPERATURE
352
IS T/E/P KEY INACTIVE FOR 5 SECONDS
354
YES
NO
IS T/E/P KEY PRESSED?
356
NO
YES
V
W

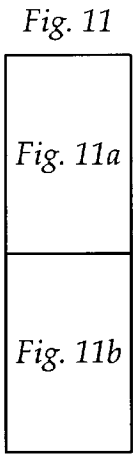
Fig. 11
Fig. 11a
Fig. 11b

Fig. 11b

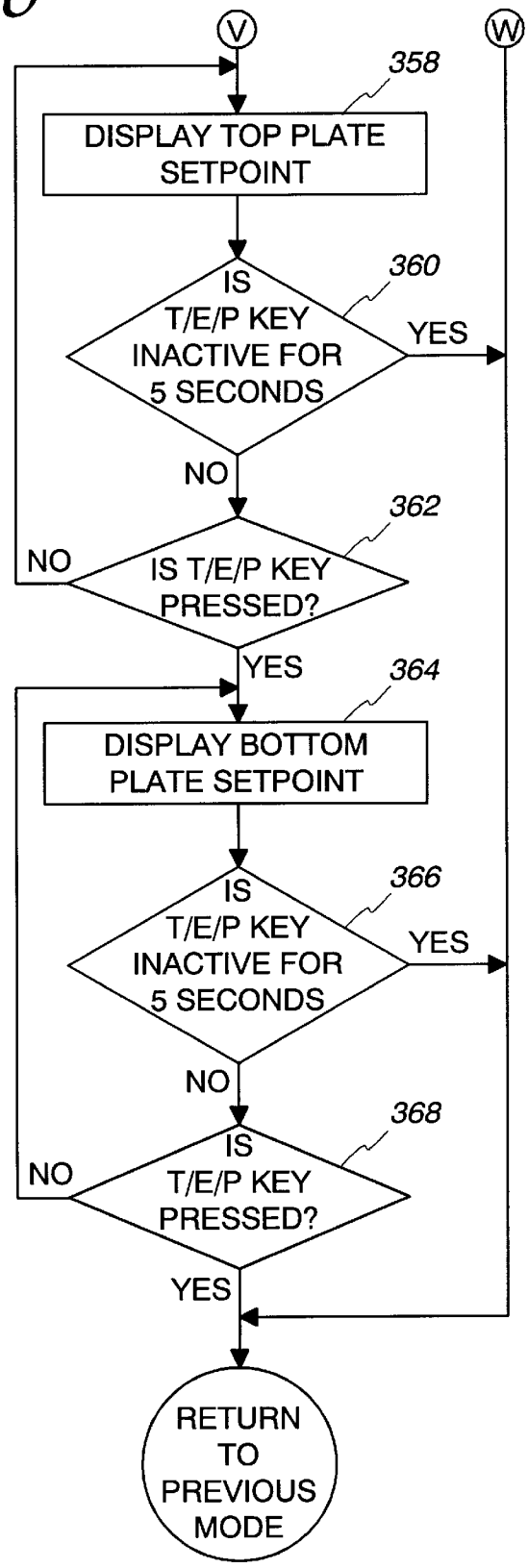
V
W
358
DISPLAY TOP PLATE SETPOINT
360
IS T/E/P KEY INACTIVE FOR 5 SECONDS
YES
NO
362
NO
IS T/E/P KEY PRESSED?
YES
364
DISPLAY BOTTOM PLATE SETPOINT
366
IS T/E/P KEY INACTIVE FOR 5 SECONDS
YES
NO
368
NO
IS T/E/P KEY PRESSED?
YES
RETURN TO PREVIOUS MODE

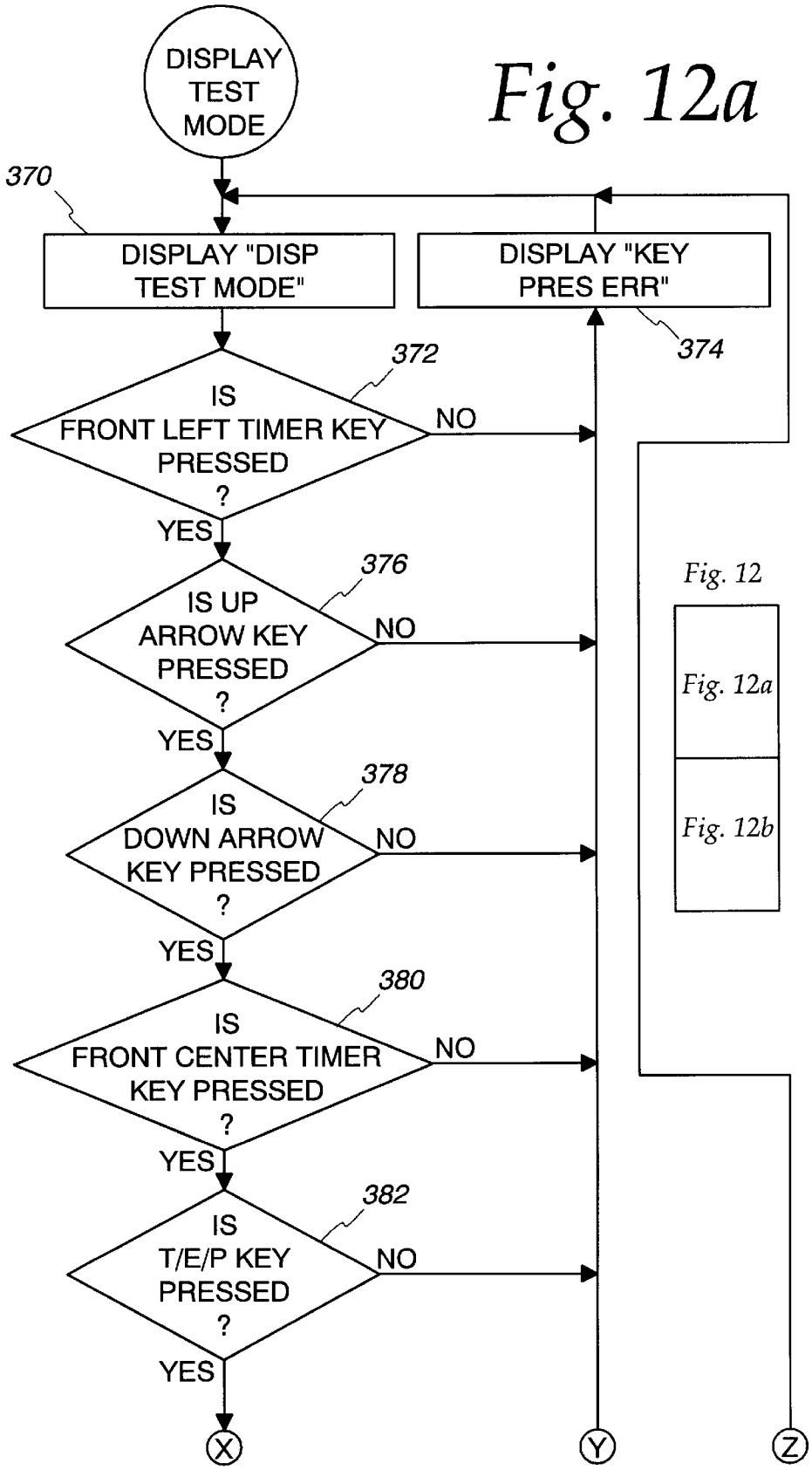

Fig. 12a

Fig. 12

Fig. 12a

Fig. 12b

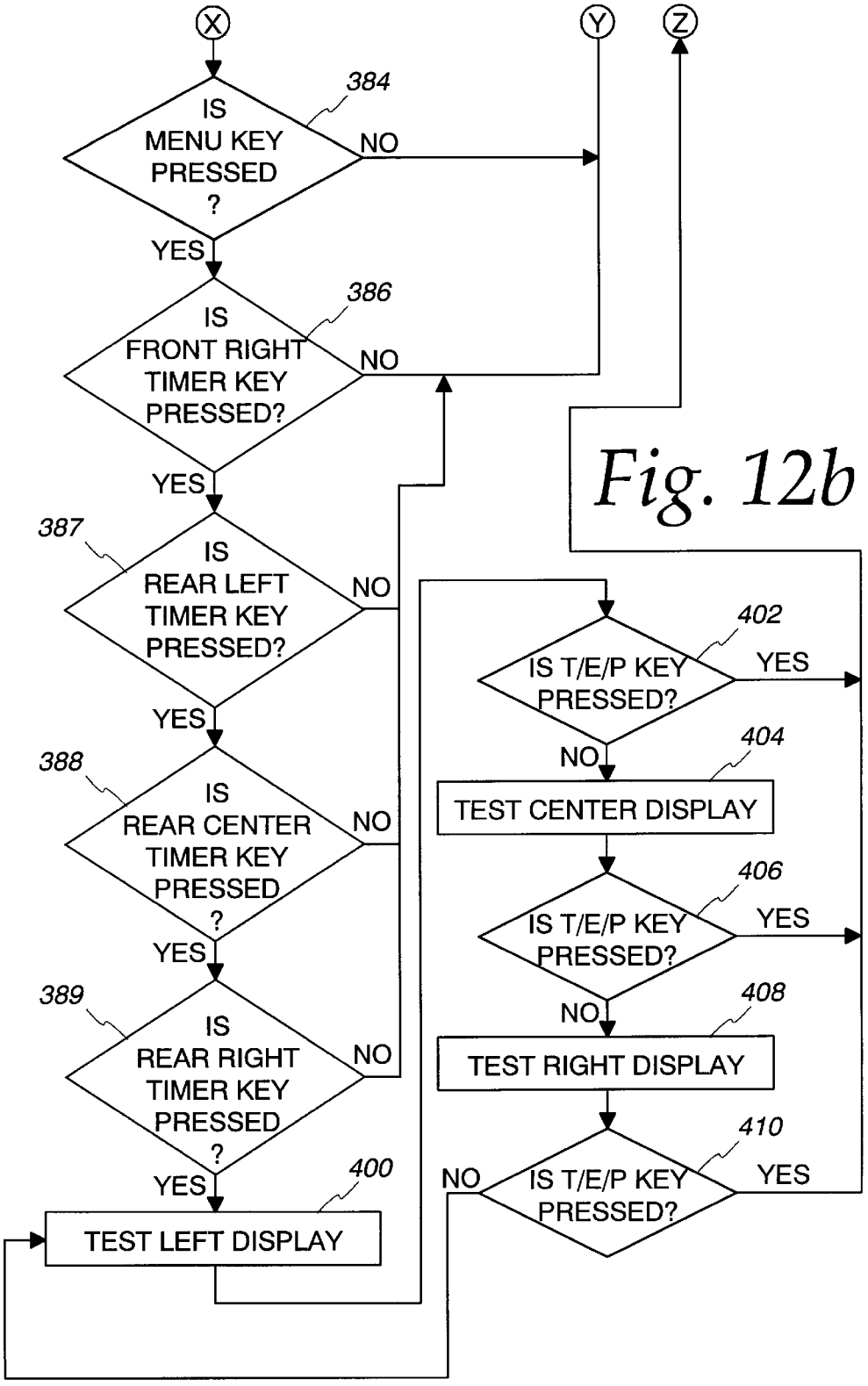
X
Y
Z
384
IS MENU KEY PRESSED ?
NO
YES
386
IS FRONT RIGHT TIMER KEY PRESSED?
NO
YES
387
IS REAR LEFT TIMER KEY PRESSED?
NO
YES
388
IS REAR CENTER TIMER KEY PRESSED ?
NO
YES
389
IS REAR RIGHT TIMER KEY PRESSED ?
NO
YES
400
TEST LEFT DISPLAY
402
IS T/E/P KEY PRESSED?
YES
NO
404
TEST CENTER DISPLAY
406
IS T/E/P KEY PRESSED?
YES
NO
408
TEST RIGHT DISPLAY
410
IS T/E/P KEY PRESSED?
NO
YES

Fig. 12b

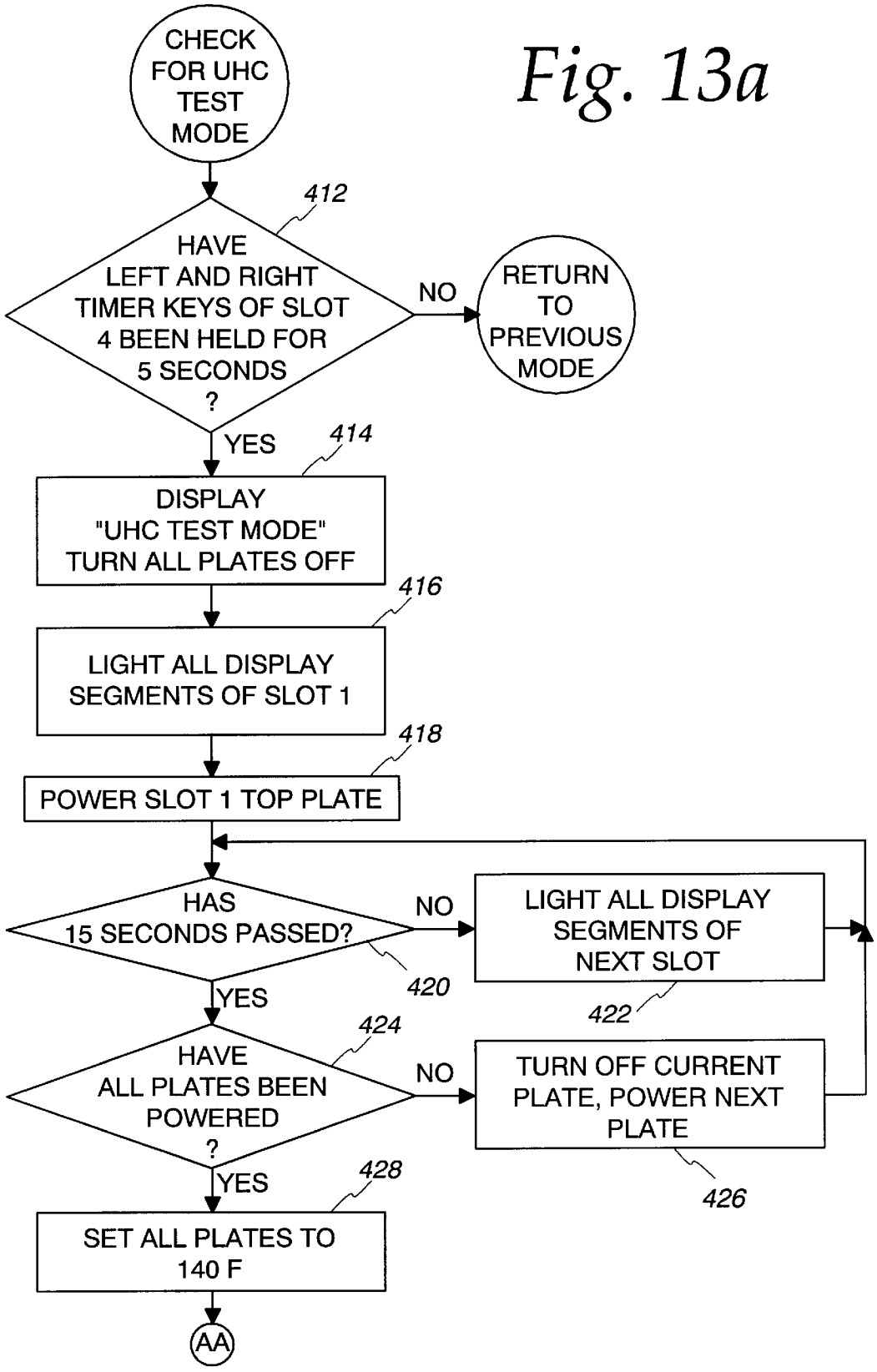
CHECK FOR UHC TEST MODE
412
HAVE LEFT AND RIGHT TIMER KEYS OF SLOT 4 BEEN HELD FOR 5 SECONDS ?
NO
RETURN TO PREVIOUS MODE
YES
414
DISPLAY "UHC TEST MODE" TURN ALL PLATES OFF
416
LIGHT ALL DISPLAY SEGMENTS OF SLOT 1
418
POWER SLOT 1 TOP PLATE
HAS 15 SECONDS PASSED?
NO
LIGHT ALL DISPLAY SEGMENTS OF NEXT SLOT
420
YES
422
424
HAVE ALL PLATES BEEN POWERED ?
NO
TURN OFF CURRENT PLATE, POWER NEXT PLATE
YES
428
426
SET ALL PLATES TO 140 F
AA

Fig. 13a

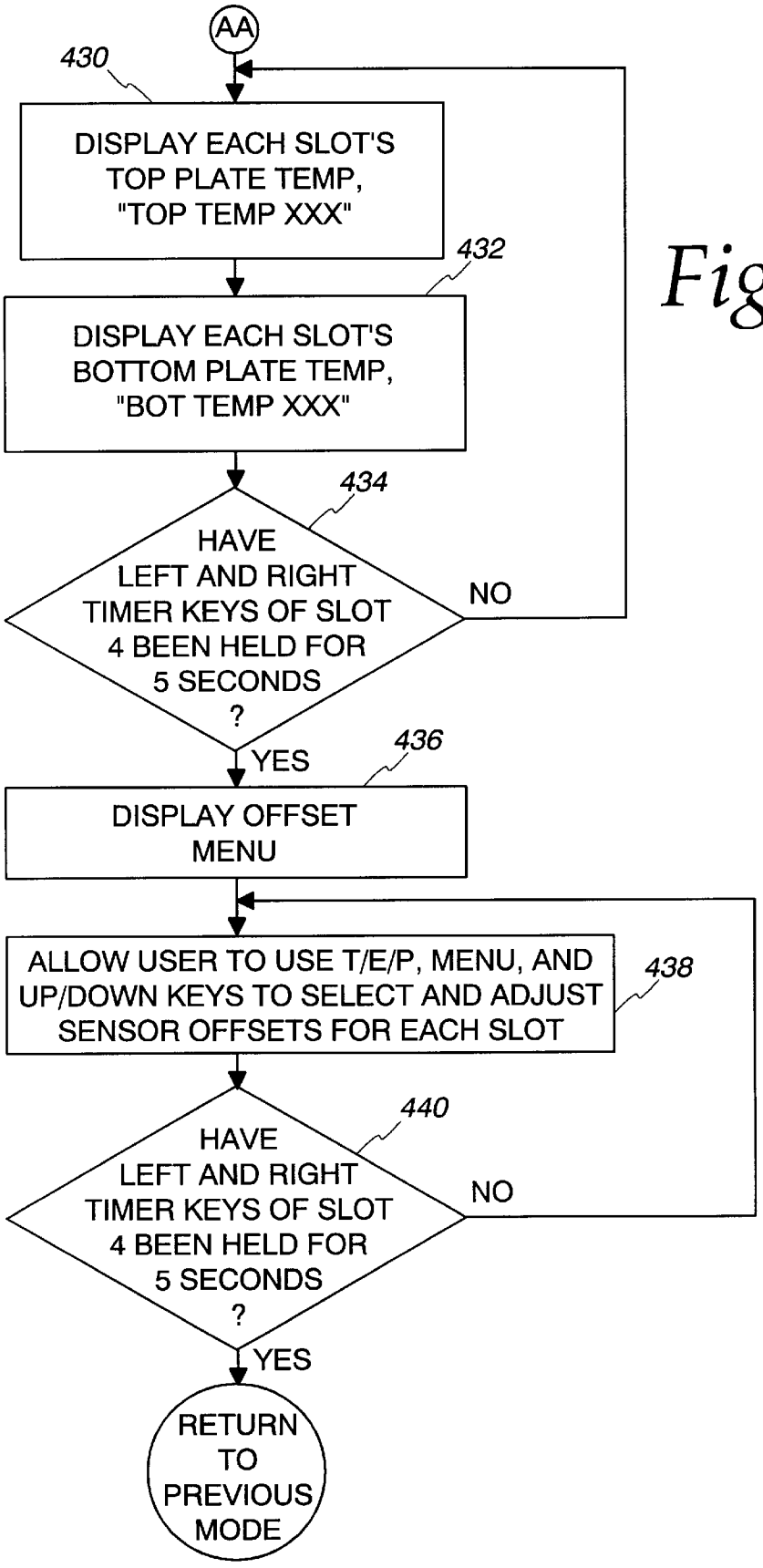
AA
430
DISPLAY EACH SLOT'S TOP PLATE TEMP, "TOP TEMP XXX"
432
DISPLAY EACH SLOT'S BOTTOM PLATE TEMP, "BOT TEMP XXX"
434
HAVE LEFT AND RIGHT TIMER KEYS OF SLOT 4 BEEN HELD FOR 5 SECONDS ?
NO
YES
436
DISPLAY OFFSET MENU
ALLOW USER TO USE T/E/P, MENU, AND UP/DOWN KEYS TO SELECT AND ADJUST SENSOR OFFSETS FOR EACH SLOT
438
440
HAVE LEFT AND RIGHT TIMER KEYS OF SLOT 4 BEEN HELD FOR 5 SECONDS ?
NO
YES
RETURN TO PREVIOUS MODE

Fig. 13b

HOLDING CABINET AND METHOD AND APPARATUS FOR CONTROLLING A HOLDING CABINET

CROSS-REFERENCE TO RELATED APPLICATION

This applications claims the benefit of U.S. Provisional Application Ser. No. 60/020,691, filed Jun. 27, 1996.

FIELD OF THE INVENTION

This invention relates to food holding or warming cabinets and a control system for maintaining the climate within the cabinet and for receiving and for disseminating information from and to the operator. In addition, the present invention relates to a method for improving the control of the climate within the food warming cabinet, and for improving an interface between the control system and an operator to facilitate the input of data and the display of information.

BACKGROUND OF THE INVENTION

In restaurants and food service establishments there is a need to maintain cooked food at temperatures where the quality of the food will not degrade over time and which allows the food to be quickly served. This is especially true in so-called "fast food" restaurants where a relatively large volume of different food products must be maintained in a sellable state allowing quick delivery to the customer. If the food is not cooked until the customer orders, the service will be too slow to satisfy the average customer. If the food is precooked and then refrigerated, the heating time required subsequent to the customer's order is reduced, however, the taste, consistency, and appearance of the food may be detrimentally altered during reheating. It has been found that for a balance of fast service along with the acceptable taste, consistency, and appearance required by fast food restaurants, the food should be cooked and then stored at a temperature which is high enough to allow the precooked food to be served upon ordering.

Previous food warming units known in the art have had problems keeping food at the appropriate temperature. This was especially true when the food warming cabinet was required to maintain more than one type of food or food product category at a single time. Different types of food or categories of food products need to be maintained at different temperatures in order to maximize the amount of time they can be stored between cooking and being served.

In addition, each category of food products stored in a warming cabinet has a set holding life before it must be immediately served or otherwise destroyed. Previous food warming units use countdown timers mounted in the comer of the cabinet. When an food product is placed in the cabinet, the operator sets a countdown timer. Problems develop when multiple items of the same food product category are placed in the warming cabinet at different times. Previous food warming units known in the art do not adequately inform the operator which item has the least amount of holding time remaining before destruction is necessary. The timer provides no correlation between the time remaining and the individual food items. This problem compounds when several operators place and remove food items from the same cabinet. Because the timer provides no information identifying the time each food item has been in the cabinet, the operators must rely on their memory or communications between themselves. The operators often forget which food

item has been in the cabinet the longest and overlook the food items that must be used first resulting in spoiled or poor quality food.

Further, in food holding cabinets known in the art that have electronic control systems, the electronic circuitry associated with the controller has been necessarily located proximate to the heat source in the food warmer. Because the electronics are constantly exposed to heat, the control circuitry has a shortened useful life span. This results in unnecessary failures of the holding cabinet controls and greater food spoilage.

Thus, a need has arisen for a new holding cabinet and a control system which will maintain multiple categories of food products at different temperatures and for different time periods, will provide a user friendly method of selecting the appropriate maximum holding time and temperature for a given category of food product, will communicate to the operator which food item from each category of food product in the cabinet must be served first, will communicate to the operator for each food item the holding time remaining before that food item must be served or destroyed, will notify the operator when the temperature in the cabinet falls below a holding set point, and will provide a distributed control system to locate the majority of the control circuitry in the cooler portions of the holding cabinet.

BRIEF SUMMARY OF THE INVENTION

In accordance with one aspect of the present invention, a holding cabinet and a control system are capable of maintaining at least two food items or containers of food product from the same food product category within a predetermined temperature range for a period of time not exceeding a predetermined maximum time. The cabinet comprises a housing having a front panel and a passageway opening at the front panel. The passageway is capable of receiving at least two containers of the food product from the same food product category. A temperature element positioned in the passageway maintains the passageway and accordingly the food product in the containers at the predetermined temperature. A processing circuit tracks the amount of time each container of the food product remains within the passageway. The processing circuit signals a display to indicate which container has been within the passageway the longest. The processing circuit also signals the display to indicate an alarm when either container remains within the passageway beyond the predetermined maximum time.

In accordance with another aspect of the present invention, a holding cabinet and a control system are capable of maintaining at least two containers holding a food product from a first food product category and at least two additional containers holding a food product from a second food product category within a first and second predetermined temperature range for a holding period of time not exceeding a predetermined first and second maximum time respectively. The holding cabinet comprises a housing having a front panel and a first and second passageway opening at the front panel. The first passageway is capable of receiving at least two containers holding a first food category and the second passageway is capable of receiving at least two containers holding a second food category. A temperature element positioned in each of the passageways maintains the first passageway within the first predetermined temperature range and the second passageway within the second predetermined temperature range. A processing circuit tracks the amount of time each container of food remains within its respective passageway. The processing circuit signals a first

display to indicate which container has been in the first passageway the longest and signals a second display to indicate which container has been in the second passageway the longest. The processing circuit also signals the first display to indicate an alarm when any container in the first passageway remains beyond the first predetermined maximum time. The processing circuit also signals the second display to indicate an alarm when any container in the second passageway remains beyond the second predetermined maximum time.

In accordance with a further aspect of the present invention, the control system is capable of maintaining multiple categories of food products at different temperatures and for different time periods, providing a user friendly method of selecting the appropriate maximum holding time and temperature for a given category of food product, communicating to the operator which food item from each category of food product in the cabinet must be served first, communicating to the operator for each food item the holding time remaining before that food item must be served or destroyed, notifying the operator when the temperature in the cabinet falls below a holding set point, and providing a distributed control system to locate the majority of the control circuitry in the cooler portions of the holding cabinet.

BRIEF DESCRIPTION OF THE FIGURES

The foregoing and other advantages of the invention will become apparent upon reading the following detailed description and upon reference to the drawings which:

FIG. **1***a* is a perspective view of the holding cabinet;

FIG. **1***b* is a front view of the holding cabinet of FIG. **1***a;*

FIG. **1***c* is a rear view of the holding cabinet of FIG. **1***a;*

FIG. **1***d* is a bottom view of a passageway along line **1***d*—**1***d* in FIG. **1***b;*

FIG. **1***e* is a top view of a passageway along line **1***e*—**1***e* in FIG. **1***b;*

FIG. **1***f* is a side view of the holding cabinet of FIG. **1***a;*

FIG. **1***g* is a top view of the holding cabinet of FIG. **1***a;*

FIG. **2***a* is a front view of a preferred embodiment of the front display panel;

FIG. **2***b* is a front view of a preferred embodiment of the rear display panel;

FIG. **2***c* is a front view of the display components in FIG. **2***b;*

FIG. **3** is a block diagram of the display driver of the control system;

FIG. **4** is a block diagram of the master control of the control system;

FIG. **5** is a front view of the front display panel in the operation mode;

FIGS. **6***a* and **6***b* are a flow chart of the start up routine used by the control system;

FIGS. **7***a* and **7***b* are a flow chart of the normal display mode routine used by the control system;

FIGS. **8***a*, **8***b* and **8***c* are a flow chart of the menu display mode routine used by the control system;

FIGS. **9***a* and **9***b* are a flow chart of the check for alarms routine used by the control system;

FIGS. **10***a* and **10***b* are a flow chart of the program mode routine used by the control system;

FIGS. **11***a* and **11***b* are a flow chart of the temperature display mode routine used by the control system;

FIGS. **12***a* and **12***b* are a flow chart of the display test mode routine used by the control system;

FIGS. **13***a* and **13***b* are a flow chart of the of the check for UHC test mode routine used by the control system.

While the invention is susceptible to various modifications and alternative forms, specific embodiments have been shown by way of example in the drawings and will be described in detail herein. However, it should be understood that the invention is not intended to be limited to the particular forms disclosed. Rather, the invention is to cover all modifications, equivalents and alternative falling within the spirit and scope of the invention as defined by the appended claims.

DETAILED DESCRIPTION OF THE INVENTION

Turning now to the drawings, FIGS. **1***a* through **1***g* illustrate the preferred embodiment for a food holding or warming cabinet **10**. The holding cabinet **10** has a housing **12** with a plurality of passageways or slots **14***a–d*. Each passageway **14***a–d* is capable of receiving at least two food containers or trays **16**. The food containers **16** may contain typical "fast food" items such as sausage, egg, bacon, Canadian bacon, muffins, biscuits, burritos, hamburger patties, chicken patties, chicken nuggets, and fish. As illustrated in FIG. **1***a*, the holding cabinet **10** has four passageways **14***a–d*, and each passageway **14***a–d* is capable of receiving three trays **16** of food. Of course, the holding cabinet may have more or less than four passageways, and each passageway may be capable of receiving more or less than three trays of food.

In the preferred embodiment, each passageway **14***a–d* has a pass-through structure. The front view shown in FIG. **1***b* and the rear view shown in FIG. **1***c* illustrate the passthrough structure of the passageways **14***a–d* with the food trays **16** being accessible on either the front or the rear side of the holding cabinet **10**. Because the passageways **14***a–d* have a pass-through structure, one operator may insert food trays **16** at a workstation on the front side of the holding cabinet **10**, and another operator may remove food trays **16** at a second workstation on the rear side of the holding cabinet **10**. The pass-through arrangement allows efficient assembly line structure in a fast-food kitchen. In an alternative embodiment, the passageways do not have a pass-through structure but rather are structured to have only a single opening. In this alternative embodiment, the food trays are accessible from only one side.

Each passageway **14***a–d* in the holding cabinet **10** contains two variable heating elements or heater plates **18***a* and **18***b*. The heater plates **18***a* and **18***b* are flat plates respectively located at the top and bottom walls of each passageway **14***a–d*. Any heater elements well known to those of ordinary skill in the field can be used. FIG. **1***d* illustrates the top wall **20** of a passageway, and FIG. **1***e* illustrates the bottom wall **24** of a passageway. A control system, described in detail hereinafter, provides power to the heater plates **18***a* and **18***b* to maintain a predetermined temperature range within the passageway **14**. RTD temperature sensing elements **22***a* and **22***b* respectively are mounted to each heater plate **18***a* and **18***b*. The RTDs **22***a–b* provide temperature feedback signals to the control system. Using the temperature feedback, the control system is capable of initiating various alarm sequences to alert operators if the passageway temperature rises above or falls below desired parameters. The control system individually controls the top heater plate **18***a* and the bottom heater plate **18***b* in each passageway

14*a–d* for separate temperature set points. The multi-temperature control properly maintains the temperature of each passageway and accordingly the food stored in each passageway. Of course, the temperature set points at the top and bottom heater plates **18***a* and **18***b* may be identical. In an alternative embodiment, the control system jointly controls the heater plates in each passageway.

In addition to heater plates **18***a* and **18***b* and the RTDs **22***a–b*, the cabinet **10** comprises at least one display panel per passageway **14***a–d*, a display driver **30***a–d* associated with each display panel, and a master control **36**. In FIG. **1***b*, the front side of the holding cabinet **10** has four front display panels **26***a–d*. Each of the four passageways **14***a–d* has a corresponding front display panel **26***a–d* positioned directly above the respective passageway **14***a–d*. Each of the four pass-through passageways **14***a–d* also has a corresponding rear display panel **28***e–h* positioned directly above the respective passageway **14***a–d* on the rear side of the holding cabinet **10** as shown in FIG. **1***c*. Because both the front side and rear side of the cabinet **10** have displays, operators on the front side and operators at the rear side view substantially identical information to coordinate proper use of the food in the cabinet **10**.

The control system comprises one master control **36** and four display drivers **30***a–d* each of which control a respective pair of the front display panels **26***a–d* and the rear display panels **28***e–h*. Each display driver **30***a–d* is mounted on a printed circuit board although other forms of circuit construction such as an integrated circuit could be used as is well known in the field. The display drivers **30***a–d* are located remote from their corresponding front and rear display panels **26***a–d* and **28***e–h*. FIG. **1***f* illustrates the side of the holding cabinet **10** with the four display drivers **30***a–d* that control the four sets of display panels **26***a–b* and **28***a–b*. The display drivers **30***a–d* are mounted on the side of the cabinet **10**. Flat cables connect each of the display panels **26***a–d* and **28***e–h* to their respective display drivers **30***a–d*. As shown in FIG. **1***f*, flat cable wiring **34***a* connects display driver **30***a* to front display panel **26***a*, and flat cable wiring **34***b* connects display driver **30***a* to rear display panel **28***e*. By locating the display drivers **30***a–d* remotely, the majority of the display control circuitry and the operator interface circuitry is located away from the heater plates **18***a* and **18***b* in cooler portions of the cabinet body. It has been found that the side area where the display drivers **30***a–d* are located is approximately 25° F. cooler than an area located adjacent to the display panels **26***a–d* and **28***e–h*. The cooler temperatures results in an extended service life of the circuitry of the display drivers **30***a–d*. In other embodiments, the display drivers may be located anywhere in the cabinet.

FIG. **1***g* illustrates the top of the holding cabinet **10** with the top panel removed. As with the display drivers **30***a–d*, the master control **36** is mounted on a printed circuit board although other forms of circuit construction such as an integrated circuit could be used as is well known in the field. The master control **36** is located remote from the passageways **14***a–d* and their temperature extremes. A wiring harness **38** comprising multiple cables connects the master control **36** with the display drivers **30***a–d*. Another wiring harness **39** comprising multiple cables connects the master control **36** to the RTDs **22***a* and **22***b* and to the heater plates **18***a* and **18***b* of each passageway. By locating the master control **36** remotely, the master control circuitry is located away from the heater elements **18***a–b* in a cooler portion of the cabinet body resulting in an extended service life of the circuitry. In other embodiments, the master control **36** may be located anywhere in the cabinet.

FIG. **2***a* illustrates the preferred embodiment of a front display panel **26**, and FIG. **2***b* illustrates the preferred embodiment of a rear display panel **28**. Each of the front display panels **26***a–d* and the rear display panels **28***e–h* respectively are the same. Accordingly, for the sake of clarity, a single front display panel **26** and a single rear display panel **28** are discussed with respect to FIGS. **2***a–c* and FIG. **5**. The display panels **26** and **28** illustrate alphanumeric messages to the operators such as the selected mode of operation, the category of food in the passageway, the time period for which the control system is maintaining the temperature set point, or the desired temperature. To display messages, the front and rear display panels **26** and **28** each contain three lighted displays **40***f*, **42***f*, **44***f* and **40***r*, **42***r*, **44***r* corresponding to three tray locations for the passageway. FIG. **2***c* illustrates the front display panel **26** wherein each of the three lighted displays **40***f*, **42***f* and **44***f* contain two lighted display sections respectively **46***a–b*, **46***c–d*, and **46***e–f*. The lighted display sections **46***a–f* are capable of displaying twelve characters on the display panel **26**. Corresponding to the three tray locations for a passageway, the left portion has two lighted display sections **46***a–b*, the center portion has two display sections **46***c–d*and the right portion has two display sections **46***e–f*. Each lighted display section **46***a–f* contains a two 14-segment character displays. Each pair of lighted display sections **46***a–b*, **46***c–d*and **46***e–f* can display an alpha numeric character representation. The lighted display sections **46***a–f* consist of LEDs. Of course, any other forms of lighted display can be used. The circuitry associated with the lighted display sections **46***a–f* is part of the respective display drivers **30***a–d* remote from the associated display panels **26***a–d* and **28***e–h*. Flat cables connect the lighted display sections **46***a–f* to the respective display drivers **30***a–d*. The rear display panel **28** has a corresponding arrangement.

Not only do the display panels **26***a–d* and **28***e–h* provide messages to the operators, but they also have keypads for operator interface. Each of the front display panels **26***a–d* have timer keys **48**, **50** and **52** respectively located adjacent to each of the three lighted displays **40***f*, **42***f*and **44***f*. Each of the rear display panels **28***e–h* have timer keys **54**, **56** and **58** respectively located adjacent to each of the three lighted displays **40***r*, **42***r* and **44***r*. The timer keys **48** through **58** respond to operator input for starting and stopping the timer associated with each tray **16** and for turning off audible alarms all of which will be discussed in detail below.

As shown in FIG. **2***a*, the front display panel **26** provides additional operator interface not present on the rear display panel **28**. Located between the left display **40***f* and the center display **42***f* are up/down arrow keys **60**. The up/down arrow keys **60** allow the operator to increase/decrease displayed variables or change selections as will be discussed below. Additionally, a temperature/enter/page key **62** is located immediately right of the center timer key **50**. The temperature/enter/page key **62** provides the operator with three functions: 1) display passageway temperature information, 2) enter operational changes, and 3) select page parameters in program mode. Between the temperature/enter/page key **62** and the right display **44***f* is a menu key **64**. The menu key **64** allows the operator to select meal transitions such as breakfast to lunch, to select clean mode operation, to turn individual passageways on or off and to provide access to the program menu. The operation of the displays and keypads will be discussed in detail below.

In the preferred embodiment, the control system comprises a master control **36** that controls the four display drivers **30***a–d* or slave boards. Each display driver **30***a–d*

receives messages to be displayed from the master control **36** and displays those messages on the lighted displays **40***f*, **42***f*, **44***f*, **40***r*, **42***r* and **44***r*. The display drivers **30***a–d* also read the keypads described above and transmit the keyed information to the master control **36**. The master control **36** controls all of the operations of the cabinet **10** directing the individual display drivers **30***a–d* to display certain messages for their passageway location. One alternative embodiment for the control system would be four independent display drivers. Each display driver would be independently controlling only its corresponding passageway's display panel. Interface between the four independent display driver boards would allow the four display drivers to share information. Another alternative embodiment would be to have a single master control that performs all of the functions of the display drivers and master control. Other embodiments would distribute some of the operations of the display drivers to the master control and vice versa. In another alternative embodiment, a single display driver or two display drivers communicating with the master control could perform all of the functions of the four display drivers.

FIG. **3** illustrates the block diagram of the one of the display drivers **30***a–d* for the preferred embodiment of the control system with one master control board **36** and four slave or display drivers **30***a–d*. Since each of the slave or display drivers **30***a–d* are the same, only one is discussed in FIG. **3**. The display driver **30** interfaces with the front and the rear display panels **26** and **28** and the master control **36**. A display microprocessor **66** on the display driver **30***a–d* communicates with the master control **36** and interfaces with the display panels **26** and **28**. The master control **36** sends out data with a communication protocol in a header identifying which display driver **30***a–d* and corresponding display microprocessor **66** the master control **36** wants to talk to. The communication protocol contains the display driver's **30***a–d* address, commands to be performed such as display message or display product time, and the message in ASCII format to be displayed on the front and rear display panels. The four display drivers **30***a–d* read the address data, and the one display driver **30***a–d* with the matching address reads the following data from the master control **36** and the other three ignore the communication. The preferred embodiment for the display microprocessor **66** is a Motorola IC 68HC705 microprocessor, although any similar microprocessor known to one of ordinary skill in the art may be used.

Because the master control **36** communicates with four display drivers **30***a–d*, each display driver **30***a–d* has an unique address. In the preferred embodiment, the display microprocessor **66** determines its address or passageway location from four lines of an address bus **68**. The address bus **68** is built into the wire harnessing **38** which connects the display driver **30** to the master control **36**. In the wire harnessing, one of the four lines that corresponds to the passageways position **1**, **2**, **3** or **4**, is shorted to ground, and the remaining three lines are tied to a logic high. When the display microprocessor **66** powers up, the four address bus lines **68** are read with the grounded line indicating the passageway position. Therefore, at every power-up, the display microprocessor **66** determines and stores in memory its passageway position in the cabinet **10**. This allows the display drivers **30***a–d* to be removed and interchanged without any special programming. In other embodiments, the passageway position of the display drivers **30***a–d* could be programmed and stored in memory.

The display microprocessor **66** receives message information from the master control **36** over a master transmit line **70**. The master transmit line **70** is a common line shared by every display microprocessor **66** in the cabinet **10**. The message information is in ASCII character format consisting of twenty-four characters, twelve for the front display panel and twelve for the rear display panel. The display microprocessor **66** translates the ASCII formatted data into bit patterns, as is well known to one of ordinary skill in the art, for display on the LEDs of the display sections **46***a–f* of the display panels **26** and **28**.

To display the message supplied by the master control **36** on the display panels **26** and **28**, the display microprocessor **66** serially transmits over a serial data out line **72** the bit patterns to a front driver circuit **74** and over serial data line **76** to a rear driver circuit **78**. The display microprocessor **66** sets the correct position of the character for display on the display sections **46***a–f* for the front display panel **26** (see FIG. **2***c*) and the corresponding display sections (not shown) for the rear display panel **28**. The display microprocessor **66** shifts out serially one character at a time to the driver circuits **74** and **78**. The display microprocessor **66** then strobes the driver circuits **74** and **78** to send the character to the proper display section. Once one character has been displayed, the display microprocessor **66** moves to the next character until the display panels **26** and **28** illustrate the message supplied by the master control **36**. The serial data from the display microprocessor **66** flows through serial data out line **72** to the front driver circuit **74** and then through serial data line **76** to the rear driver circuit **78** and finally through serial data in line **80** back into the display microprocessor **66**. The display microprocessor **66** may monitor the serial data in line **80** to verify the shifting of the characters to the display panels **26** and **28**.

A control bus **82** connects the display microprocessor **66** to the driver circuits **74** and **78**. The control bus **82** provides digital lines for control signals to enable or disable the shifting of serial character data to the driver circuits **74** and **78**. The control bus **82** also provides a path for a latch enable signal from the display microprocessor **66** to strobe the data to the display sections **46***a–f*.

The display microprocessor **66** coordinates the illustration of the message and also reads operator input signals. When the operator presses one of the keys on the front display panel **26**, the key press signals transmit over front key lines **84** to a front buffer **86**. The key press signals are stored in the front buffer **86** until the display microprocessor **66** strobes the front buffer **86** via the control bus **82**. When the front buffer **86** is strobed, the key press signal travels over a key press data bus **88** to the display microprocessor **66**. A key press signal from the rear display panel **28** transmits over rear key lines **90** to a rear buffer **92**. The key press signals are stored in a rear buffer **92** until the display microprocessor **66** strobes the rear buffer **92** via the control bus **82**. When the rear buffer is strobed, the key press signal travels through the key press data bus **88** to the display microprocessor **66**. The key press signals from the front and rear display panels **26** and **28** are placed on the common key press data bus **88** because the display microprocessor **66** selects which buffer can transmit over the bus **88**.

The display microprocessor **66** forwards the key press signals to the master control **36** via a master receive line **94**. The communication protocol for transmitting the key press to the master control **36** consists of a header with hex value **55**, the display driver's address, and the key press identification data. Two handshake lines coordinate communication between the display microprocessor **66** and the master control **36**. A master busy handshake line **96** signals the display microprocessor **66** that the master control **36** is busy and cannot receive communications on the master receive

line **94**. The master busy handshake line **96** is active low, so when the master busy line **96** is low, the display microprocessor **66** cannot initiate communications to the master control **36**. When the master busy handshake line **96** is high, the display microprocessor **66** can transmit key press signals over the master receive line **94**. A RTS handshake line **98** signals the display microprocessor **66** that one of the other display microprocessors is transmitting to the master control **36**. The RTS handshake line **98** is active low, so when the RTS line **98** is low, the display microprocessor **66** cannot initiate communications to the master control **36**. When the RTS line **98** is high, the display microprocessor **66** can transmit key press signals over the master receive line **94**. The RTS handshake line **98** coordinates data transfer between the four display microprocessors **66** and the master control **36** to avoid serial link contention. The RIS handshake line **98**, master receive line **94** and master busy handshake line **96** are each common lines shared by every display microprocessor **66** in the cabinet **10**.

FIG. **4** illustrates a block diagram of the preferred embodiment of the master control **36**. A master microprocessor **100** controls the operation of the entire holding cabinet **10**. The preferred embodiment for the master microprocessor **100** is a Motorola IC68HC16Z1CFC16 microprocessor, although any similar microprocessor known to one of ordinary skill in the art may be used. The master microprocessor **100** directs the four display microprocessors **66** to display certain messages, analyses operator key press signals and controls the temperature of each passageway **14***a–d*. The master microprocessor **100** executes a cabinet control program to control the operations of the holding cabinet **10**. The operations of the cabinet control program will be discussed in detail below. The cabinet control program is stored in a memory **102** which the master microprocessor **100** interfaces through a data bus **104**, a control bus **106** and an address bus **108**. In the preferred embodiment, the memory **102** is composed of three separate memory devices 1) an EPROM stores the cabinet control program in permanent memory, 2) an EEPROM stores operator programmable data such as entries made in the program mode described below, and 3) a RAM stores temporary data from the cabinet control program's execution; although, other memory device known to one of ordinary skill in the art may be used. When the cabinet **10** is powered up, the master microprocessor **100** performs the cabinet control program to operate the holding cabinet **10**.

Through the operation of the cabinet control program, the master microprocessor **100** communicates with the four display microprocessors **66** via the master transmit line **70**, the master receive line **94**, the master busy handshake **96** and the RTS handshake **98**. The master microprocessor **100** sends display messages in ASCII character format to the display microprocessors **66**. In return, the display microprocessors **66** relay key press signals to the master microprocessor **100** conveying operator input.

In addition to controlling the messages displayed on the display panels **26** and **28**, the master microprocessor **100** controls the temperature at the top and bottom of each of the four passageways **14***a–d*. To maintain the temperature of the passageways **14***a–d* within the predetermined temperature range, the master microprocessor **100** individually controls each of the eight heater plates **18***a–b* through the eight heater control lines **112**. The heater control lines **112** connect the master microprocessor **100** to a heater control circuit **114**. The heater control circuit **114** is a group of switches controlled by the master microprocessor **100**. One phase of the AC power line **116** is wired in parallel to all of the heater plates **18** over one of the heater power lines **118**. The other phase of the AC power line **116** is connected to eight zero-crossover triac circuits, a type of solid state switch known in the art. Other switches including mechanical or solid state relays as known in the art may also be used. When the master microprocessor signals the heater control circuit **114** to provide heat to a certain heater plate **18**, the switch corresponding to the desired heater plate **18** connects the other phase of the AC power line **116** to the heater power lines **118**. With both phases of the AC power line connected to the heater plate **18**, the circuit is complete and the plate **18** converts the AC power into heat for the holding cabinet passageway **14***a–d*.

The master microprocessor **100** monitors the temperature at the top and bottom of each passageway **14***a–d*. To determine the temperature, the RTDs **22** provide temperature signals to the master control **36** over eight RTD lines **120**. The RTDs **22** are temperature sensitive resistors whose resistance changes with changes in temperature. Basically, the resistance of the RTD **22** and in turn the temperature that resistance represents is determined using a conventional bridge circuit as known in the art. The RTD lines **120** along with a common analog ground connect each RTD **22** to the bridge circuit. The bridge circuit consists of two voltage divider circuits, a sensor-divider and a reference-divider, wired in parallel. Each voltage divider circuit consists of two resistors wired in series for a total of four resistors. The reference-divider consists of two precision resistors whose resistance value is known. The voltage supplied for the bridge circuit is a know reference voltage of approximately five volts. The sensor-divider consists of a precision resistor whose resistance value is known and the RTD temperature signal or resistance that is the only unknown quantity.

The reference voltage supplied to the bridge circuit is referenced tracked as known in the art. Factory calibration procedures during construction of the control system store the reference voltage value in memory. The reference voltage value may change with changing conditions, so the reference voltage value is tracked with tracking circuit **127**. The tracking circuit **127** is a voltage divider that divides the reference voltage value and supplies the divided value to the master microprocessor **100**. The master microprocessor **100** compares the divided value to the calibrated value stored in memory. The percentage change between the divided value and the calibrated value is used to adjust the temperature signal exiting the amplifier **128**.

Before the RTDs **22** are connected to their respective bridge circuit, the temperature signals on the RTD lines **120** are filtered by a filter/sensor-divider circuit **122** to remove any noise on the signal from the RTDs **22**. The signals pass through a simple low pass RC filters as known in the art with a cut-off frequency of approximately three hertz. Any filter known in the art may be used to filter out low frequency and high frequency noise.

The cabinet **10** has eight RTDs **22**, so eight bridge circuits determine the resistance of the eight RTDs **22**. Because the reference-divider can be the same for all of the eight bridge circuits, a single reference-divider circuit **126** provides the reference side for all eight bridge circuits. The eight filtered temperature signals make up the unknown resistance of the sensor-divider in the filter/sensor-divider circuit **122**. The divider voltage of the eight sensor-dividers are then directed through an eight to one multiplexor **124**.

By feeding the analog output end of the multiplexor **124** and the divider voltage of the reference-divider circuit **126** into a differential amplifier **128**, a differential voltage is

amplified. The differential voltage between the sensor voltage and the reference voltage is the change in voltage due to the change in temperature sensed by the RTD **22**. The amplifier not only amplifies the differential voltage, but also converts the signal to ground referenced voltage for transmission to the master microprocessors **100**.

Instead of using the bridge circuits, another embodiment for reading the temperature signals from the RTDs would be to muliplex a constant current source into each of the RTDs. With a known value for current, the RTD voltage is directly related to the RTD resistance which is directly related to temperature allowing the temperature at the heater plate to be readily calculated.

The signal exiting the amplifier **128** is sent to the master microprocessor **100**. The master microprocessor **100** has analog to digital circuitry to read the signals for each of the passageway positions. Using the signals or temperature data supplied by the RTDs **22**, the master microprocessor **100** determines the temperature sensed by the RTD **22**. If the temperature of the heater plate is not within a predetermined range or setpoint, the microprocessor will signal the heater control **114** to supply heat to the passageway and will sound an audible alarm **110** if the temperature meets an alarm condition as described below.

The cabinet control program operates the holding cabinet **10**. The cabinet control program operates in several distinct control modes including: (1) operator mode; (2) manager mode; (3) service mode; (4) factory mode; and (5) Chromalox mode.

The operator mode provides an operator with normal day to day operations for the holding cabinet **10**. The operator mode allows the operator to start, acknowledge, and reset product timers; select breakfast or lunch menus; select the clean mode, turn on or off the passageways, and configure the passageway product selections.

When the operator turns on the holding cabinet **10**, the lighted displays illustrate the name and version number of the cabinet control system for five seconds. The lighted displays then alternate the "SLOT TEMP LOW" message and the default breakfast product selection mnemonic at the lowest display intensity until the passageways are heated to the predetermine temperature range or setpoints for the default product selections. The default breakfast product selection for slot **1** are "SAUS" representing sausage for the left lighted display, "SAUS" for the center lighted display, and "SAUS" for the right lighted display; the default product selections for slot **2** are "ROUN" representing round egg for the left lighted display, "ROUN" for the center lighted display, and "CBAC" representing Canadian bacon for the right lighted display; the default product selections for slot **3** are "SCRA" representing scrambled egg for the left lighted display, "FOLD" representing folded egg for the center lighted display, and "CBAC" representing Canadian bacon for the right lighted display; the default product selections for slot **4** are "NONE" representing an open tray location for the left lighted display, "BISC" representing biscuit for the center lighted display, and "NONE" representing an open tray location for the right lighted display. The operations of the cabinet control program at power on are more fully described below in conjunction with FIGS. **6***a* and **6***b*.

In the operator mode, the operator may use the default product selections illustrated or change to new product selections. To change the product selections illustrated, the operator enters the program mode to select the products to be placed in each passageway location. To enter the program mode, the operator presses and holds the menu key for at least five seconds. When the program mode is entered, the lighted displays shows a "PROG MODE" message.

At the "PROG MODE" message, the operator presses the temperature/enter/page key to scroll to the correct passageway illustrated on the lighted displays with "SLOT 1" representing passageway **14***a*, "SLOT 2" representing passageway **14***b*, "SLOT 3" representing passageway **14***c* and "SLOT 4" representing passageway **14***d*. Once the desired passageway is illustrated, the operator presses the menu key to scroll the meal, tray position on the lighted displays, for example "BFST LEFT SAUS, BFST CENT SAUS, BFST RGHT SAUS". When the desired meal and tray position are illustrated, the operator uses the up/down arrow keys to scroll the available product selections, for example "BFST LEFT SAUS, BFST LEFT ROUN, BFST LEFT FOLD". The breakfast product selections are SAUS representing sausage, ROUN representing round egg, FOLD representing folded egg, SCRA representing scrambled egg, RBAC representing regular bacon, CBAC representing Canadian bacon, MUFF representing muffin, BISC representing biscuit, BURR representing burrito. The lunch product selections are 10-1 representing regular hamburger patties, 4-1 representing quarter pound hamburger patties, GRCK representing grilled chicken, NUGG representing chicken nuggets, FISH representing fish and McCK representing chicken patties. Of course, other product solutions can be used.

When the operator changes the product selection, the master microprocessor changes the holding temperature for the passageway Each product selection has a preset holding temperature stored in memory. The product selected in the left lighted display determines the holding temperature for the entire passageway. Only products that have holding temperatures with 5° F. of the left display's product selection will be displayed for the center and right lighted displays. The master microprocessor acquires the holding temperature for the specific product selection from the memory. If the holding temperature of the new product selection is different from the prior product selection, the master microprocessor adjusts the passageway temperature accordingly. During transition to the new holding temperature, the operator may be alerted with alarms which will be described below.

The operator may continue to change the product selections in the manner described above until all of the lighted displays illustrate the desired product selections. To exit the program mode, the operator holds the menu key for five seconds. If no key entries occur for five minutes in the program mode, the master microprocessor exits the program mode.

Once the desired product selections are illustrated on the lighted displays and the passageways are heated to their predetermined temperatures, the operator may place food trays into the tray locations corresponding to their lighted displays. When the operator places a tray of food in the left tray location, he activates a left timer by pressing the left timer key. Once the left timer key is pressed, the left product timer counts down from a predetermined maximum holding time for the product selection. In an alternative embodiment, the manual timer key is replaced by at least one sensor positioned within the passageway to detect the presence of a tray and appropriately start the timers. The sensors detect the placement of the tray into the left tray position of the passageway and provide a start signal for the left timer. When the master microprocessor receives the left timer start signal, the left product timer counts down from the predetermined maximum holding time. The master microproces-

sor acquires the predetermined maximum holding time for the specific product selection from the memory. The memory stores the holding times for all product selections. When the operator places an additional tray of food into the center tray location, he activates the center product timer by pressing the center timer key. In the alternative, when the sensors detect the placement of a tray of food in the center tray location and provide the center timer start signal to the master microprocessor, the center product timer starts counting down from the predetermined maximum holding time.

FIG. **5** illustrates the operation mode for the front display board **26**. In the present example, the operator has activated the left product timer **48** and the center product timer **50** as described above. The left and center lighted displays **40***f* and **42***f* respectively alternative illustrating the product selection for one second and then illustrating the holding time remaining for five seconds. To grab the operator's attention, the left display **40***f* indicates the use first product selection. The use first product selection is the product timer for a category of food with the least amount of holding time remaining. The use first lighted display distinguishes itself from the other lighted displays with the same product selection by lighting its display at the brightest level of display intensity and running dots on the display. The center display **42***f* maintains the same product selection as the left display **40***f* and has more holding time remaining than the left display **40***f*. The center display **42***f* is lighted at a medium level of display level intensity to indicate the active timer that is not the use first product selection. The right display **44***f* shows just the product selection at a lowest level of display intensity to indicate an inactive timer.

The product timers count down from their preset values for the product selection and the lighted displays illustrate the product selection mnemonic and holding time remaining as described above. When the operator removes the food tray **16**, the operator presses the timer key corresponding to that tray to turn off the active product timer. In the alternative embodiment with sensors to detect the presence of the trays, the sensors detect the removal of the tray from its corresponding tray position of the passageway and provide a stop signal to the master microprocessor for the corresponding timer. When the timer key is press, the lighted display changes to the inactive status illustrating only the product selection at low intensity. The lighted display of the active product timer with the least holding time becomes the new use first lighted display.

When one of the use first timers expires, an audible alarm alerts the operator and the lighted display illustrates "00". All other lighted displays in the cabinet **10** will switch to the lowest intensity level until the operator turns the alarm off and clears the expired timer by pressing the corresponding timer key. If other timers expire in the meantime, the audible alarm continues after clearing of the first alarm, and the lighted display of the new expired timer illustrates "00". When all expired timers are cleared, the lighted displays of the remaining active timers return to active status, and the use first display is the next timer with the least amount of holding time remaining.

The operator mode allows the operator to change the product selection of an inactive lighted display from breakfast to lunch. To change from breakfast to lunch, the operator presses the menu key to scroll the lunch product selections on the lighted display. To activate the meal selection illustrated, the operator presses the temperature/enter/page key. If the temperature/enter/page key is not pressed within five seconds of the menu key press, the product selection will return to the prior breakfast meal selection. Any active timers will not change to the new meal selection until the timers are stopped or reset. If the new meal product selection has a holding temperature different from the current product selection, a temperature alarm occurs with the lighted displays alternating the product selection and the "SLOT TEMP LOW" or "SLOT TEMP HIGH" message depending if the passageway temperature is lower or higher respectively than the new product holding temperature while the passageway temperature is changed.

The operator mode further allows the operator to chose the clean mode. The clean mode changes the temperature of all passageways in the cabinet to 125° F. to allow the passageways to be safely cleaned by the operator. To enter the clean mode, the operator presses the menu key to scroll to the clean mode message "CLN MODE". The operator presses the temperature/enter/page key to activate the clean mode. When the clean mode is activated, all passageways in the cabinet change to the clean mode. In the clean mode, if any passageway temperature is above 125° F., the lighted displays will alternate a "SLOT CLN MODE" and a "NOT SAFE YET" message until the passageway temperature is 125° F. When the passageway temperature decreases to 125° F. the lighted displays show "SAFE TO CLN". If the temperature/enter/page key is not pressed within five seconds of scrolling to the "CLN MODE" message, the lighted displays return to their previous product selections.

To exit the clean mode, the operator presses the menu key to illustrate the "EXIT CLN MODE" message. The operator then presses the temperature/enter/page key to return to normal operation. The lighted displays alternatively illustrate "SLOT TEMP LOW" and the production selection until the temperature in the passageway rises to the preset holding temperature. If the temperature/enter/page key is not pressed within five seconds of the "EXIT CLN MODE" message, the passageway will return to the clean mode.

In the operator mode, the operator may turn the heater plates of a passageway off by scrolling with the menu key to the message "TURN SLOT OFF" on the lighted displays. To accept the message, the operator presses the temperature/enter/page key. When the passageway is turned off, the lighted displays message "SLOT IS OFF", and the master microprocessor no longer supplies the heater plates in the passageway with power. If the temperature/enter/page key is not pressed within five seconds of the "TURN SLOT OFF" message, lighted displays return to displaying the product selections. The operator may turn on the heater plates of a passageway by pressing the menu key to scroll to the "TURN SLOT ON" message on the lighted displays. To turn the passageway on, the operator presses the temperature/enter/page key. The master microprocessor will supply power to the heater plates of the passageway, and the lighted displays alternatively illustrate "SLOT TEMP LOW" and the product selection until the temperature rises to the predetermined holding temperature. If the operator does not press the temperature/enter/page key within five seconds of the "TURN SLOT ON" message, the passageway will return to the "SLOT IS OFF" status.

The operator mode provides for the display of passageway temperature information when the operator presses the temperature/enter/page key. When the temperature/enter/page key is successively pressed, the lighted displays illustrate the following information for the passageway: 1) top plate temperature "TOP TEMP **160**", 2) bottom plate temperature "BOT TEMP 160", 3) top plate temperature set point "TOP TSET 160" and 4) bottom plate temperature set point "BOT TSET 160". After the bottom plate temperature setpoint is displayed, pressing the temperature/enter/page

key another time or by pressing no key for five seconds returns the lighted displays to the previous illustration.

The cabinet control program provides the operator mode with five temperature alarms to alert the operator: 1) high temperature alarm, 2) low temperature alarm, 3) FDA alarm, 4) sensor alarm, and 5) rise time alarm. If an alarm condition occurs, an audible alarm sounds and the lighted displays alternate the product selection and the specific alarm message. During an alarm condition, the timers cannot be started.

If a passageway temperature is above or below the preset holding temperature limits for a product selection, the high temperature alarm or the low temperature alarm occurs respectively. The temperature in the passageway may be 5° F. greater than or less than the predetermined temperature setpoint, for example if the top heater plate setpoint is 160° F., the range of acceptable temperatures is 155° F. to 165° F. If temperature of the passageway is below the temperature range or above the temperature range, the lighted displays message "SLOT TEMP LOW" or "SLOT TEMP HIGH" respectively. If the passageway temperature persist below or above the temperature range for an alarm time whose default value is two minute, the audible alarm sounds. To turn off the audible alarm the operator presses any timer key on the display panel above the passageway. The displays will alternatively display the product selection and the alarm message until the passageway temperature returns to the preset holding temperature limits.

An FDA alarm notifies the operator that the passageway temperature is below the preset limit of 140° F. to hold the product. When the FDA alarm condition occurs for an FDA time whose default value is two minutes, the lighted displays messages "TEMP UNDR FDA", and the audible alarm sounds. In addition, all active timers are automatically reset. To turn off the audible alarm, the operator presses one of the timer keys on the display panel. The FDA alarm message remains illustrated until the passageway temperature returns to the preset holding temperature limits. If a timer keys is not pressed, the audible alarm and the FDA message remain.

A sensor fail alarm indicates a faulty sensor. The alarm occurs when the RTD sensor temperature reading is above 260° F. or below 55° F. When one of these conditions occurs, the audible alarm sounds and the lighted displays message "SENS ALRM". To turn off the alarm, the operator presses any timer key on the display panel. The sensor alarm message remains illustrated until the temperature read by the RTD sensors returns to operating limits. The microprocessor removes power to the passageway's heater plates until the sensor is repaired.

A rise time alarm indicates that the passageway temperature failed to reach operating temperature within the preset time limits of the system at power up. If the temperature in the passageway does not increase from 100° F. to 125° F. within fifteen minutes, the lighted displays illustrate "SLOT RISE RATE" and the audible alarm sounds. To clear the display, the operator presses any timer key on the display panel acknowledging the alarm. The rise time alarm notifies the operator that the cabinet requires a service call. The operator may view the results of the rise time test. The rise time test is more fully describe in conjunction with the power up operation of the cabinet control program in FIGS. **6***a* and **6***b*. To view the rise time in minutes, the operator presses the temperature/enter/page key to scroll to the "TEST PAGE" message. The operator then presses the menu key to scroll the rise time recorded for each slot "RISE TIME 9".

The cabinet control program provides a manager mode for modifying preset cabinet operations. In the manager mode, the operator may add, delete and edit product selection messages, change product holding times and temperature settings, adjust display intensity level, set timer display time and product display time values. These functions are password protected, so the operator, preferably the manager of the fast food kitchen, must enter a password before the changes can be made. To enter the manager mode, the operator presses and holds the menu key for five seconds to illustrate the "PROG MODE" message on the lighted displays. The operator further presses the temperature/enter/page key to scroll to the "VIEW PAGE" message. At the "VIEW PAGE" message, the operator presses the menu key to scroll to the "SECR LOCK" message. The operator then uses the up/down arrows to enter the appropriate four digit password number.

In the manager mode, the operator may enter a new product selection. To enter a new product selection, the operator presses the temperature/enter/page key to scroll to the "EDIT PAGE" message on the lighted displays. At the "EDIT PAGE" message, the operator presses the menu key to scroll to a blank or unused product message or to a previous entry for editing. The operator presses the down arrow key to select each displayed character to edit. A flashing decimal point indicates that the selected character is immediately left of the decimal point. Pressing the up arrow key scrolls through the available character choices (A–Z and 0–9) for the displayed character. For example when the lighted displays illustrate "PROD NAME XW.", the operator has selected the second displayed character W. Pressing the up arrow changes the lighted displays to message "PROD NAME XX.". The displayed characters are saved when the program mode is exited.

After the product name is entered, the operator presses the temperature/enter/page key to scroll to the "TIME PAGE" message. The operator presses the menu key to scroll through the product times on the lighted displays, for example "XX TIME 20". To change the time amounts illustrated, the operator presses the up/down arrow keys. To accept a displayed time amount, the operator presses the temperature/enter/page key to move to the "TEMP PAGE" message on the lighted displays. The operator scrolls to the top plate temperature selection with the menu key and presses the up/down keys to change the temperature settings, for example "XX Ttop 155". Pressing the menu key accepts the illustrated top plate temperature and scrolls to the bottom plate temperature which is set following the same procedure as for the top plate temperature.

After the operator has entered the temperature selections, the operator presses the temperature/enter/page key to scroll to the "MEAL PAGE" message. At the "MEAL PAGE" message, the operator presses the menu key to scroll to the meal selection. The operator uses the up/down arrow select breakfast, lunch or all, for example "XX MEAL BFST". An optional feature allows the cook time to be entered by pressing the temperature/enter/page key to scroll to the "COOK PAGE" message. At the "COOK PAGE" message, the operator presses the menu key to scroll to the time cook selections where the up/down arrows change the displayed time amounts.

The operator in the manager mode may change the display intensity level for the product selection by pressing the temperature/enter/page key to scroll to the "VIEW PAGE" message. At the view page, the operator presses the menu key to scroll to the "DIST INT 1" message. By pressing the up/down arrows, the operator scrolls through

the intensity level **1**, **2** or **3**, increasing the number increases the intensity of the display. The operator may also change the display setting time. The display setting time determines the length of time that the holding time and product selection of an active timer are displayed. To change the holding time and the product selection display setting time, the operator presses the temperature/enter/page key to scroll to the "VIEW PAGE" message. The operator then presses the menu key to scroll to the "TIMR TIME" or "PROD TIME" message. By pressing the up/down arrow key the operator changes the default settings which are 5 seconds for the holding time and 1 second for the product selection. All selections in the manager mode are entered by exiting the program mode and returning to the prior illustrated product selections. To exit the program mode, the operator holds the menu key for five seconds. If no key entries occur for five minutes in the program mode, the master microprocessor exits the program mode returning to the prior illustrated product selections.

The cabinet control program further provides a service mode. In the service mode, the operator, preferably a field service technician, has access to menu selections necessary for servicing the holding cabinet. The selections accessible by the field service technician include inputs, outputs, calibration parameters, alarm set points, enable/disable alarm conditions, FDA temperature alarm and °F. to °C. conversion. Another mode provided by the cabinet control program is the factory mode which allows access to several factory-determined test modes. The test modes include sequencing the outputs in ten second increments for automatic testing, holding temperature set points at 140° F. for entry of calibration offset data, and ramping holding temperatures to 200° F. for verification of offset data. The test mode is more fully described in conjunction with FIGS. **13***a* and **13***b* below. The cabinet control program also has a Chromolox mode which provides access to test and calibration menus. The service, factory and Chromolox modes are password protected requiring the operator to enter the proper password prior to entering those modes.

The master microprocessor's cabinet control program consists of a group of routines that control the operations of the holding cabinet **10**. When the operator turns on the power to the cabinet, the master microprocessor begins performing the power on routine. FIGS. **6***a* and **6***b* are a flow chart of the power on routine. The flow charts describe the steps of the program routines for a single passageway and corresponding display panel because the master microprocessor follows the same steps for each passageway and corresponding display panel. In the power on routine, the master microprocessor supplies power to the heater plates, monitors for operator input and determines whether the rise time is within preset limits.

The power on routine begins when the power is supplied to the cabinet. At step **132**, the master microprocessor displays the version number of the cabinet on the lighted displays of each display panel **26** and **28** for five seconds. At step **134**, the master microprocessor determines whether the temperature of the passageway is above the FDA limit of 140° F. If the answer at step **134** is affirmative for all of the passageways, the master microprocessor lost power momentarily, so the master microprocessor initializes the product selection illustrated on the lighted displays with the previous selections at step **136**. The master microprocessor also clears the temperature and FDA alarm inhibits so the alarms will sound if any an alarm condition occurs. If the answer at step **134** was negative, the cabinet did not momentarily lose power, so the master microprocessor initializes the product selections illustrated on the lighted displays to the default breakfast settings at step **138**. The master microprocessor also inhibits the FDA and low alarms to prevent the alarms from sounding when the cabinet is just turned on. At step **140**, the master microprocessor enables the temperature control to supply power to the heater plates to provide heat within the passageway. The master microprocessor then monitors for any operator key presses.

At step **142**, the master microprocessor determines whether the operator press the temperature/enter/page key. If the answer at step **142** is affirmative, the master microprocessor passes control to the temperature display mode which will be described in conjunction with FIGS. **11***a* and **11***b*. If the answer at step **142** is negative, the master microprocessor determines whether the operator pressed the menu key at step **144**. If the answer at step **144** is affirmative, the master microprocessor proceeds to the menu display mode which will be described in conjunction with FIGS. **8***a*, **8***b* and **8***c*. If the answer at step **144** is negative, the master microprocessor determines whether the operator selected the program mode at step **146**. To select the program mode, the operator holds down the menu key for five seconds. If the answer at step **146** is affirmative, the master microprocessor goes to the program mode which will be described in conjunction with FIGS. **10***a* and **10***b*. If the answer at step **146** is negative, the master microprocessor goes to step **147**. At step **147**, the master microprocessor executes the Check for UHC Test Mode routine which is described in detail in conjunction with FIGS. **13***a* and **13***b*.

After returning from the Check for UHC Test Mode routine, the master microprocessor determines whether the passageway temperature is 100° F. at step **148**. If the answer at step **148** is affirmative, the master microprocessor starts a rise time timer at step **150** and continues to step **152**. If the answer at step **148** is negative, the master microprocessor determines whether the passageway temperature is 125° F. at step **152**. If the answer at step **152** is affirmative, the master microprocessor stops the rise time timer at step **154** and stores the rise time in memory at step **156**. At step **158** the master microprocessor determines whether the rise time is within the 15 minute factory limit. If the answer at step **158** is negative, the master microprocessor sounds an audible alarm and displays a "SLOT RISE RATE" message on the lighted displays of the display panel at step **160**. At step **162** the master microprocessor determines whether the operator pressed one of the timer keys on the display panel to acknowledge the rise time alarm and to acknowledge the need for a service call for the holding cabinet. If the answer at step **162** is negative, the master microprocessor returns to step **160**. If the answer at step **162** is affirmative, the master microprocessor turns off the audible alarm and proceeds to step **166**. If the answer at step **158** is affirmative, the master microprocessor also proceeds to step **166**. Likewise, if the answer at step **152** is negative, the master microprocessor proceeds to step **166**.

At step **166** the master microprocessor determines whether the passageway temperature is above the FDA limit of 140° F. If the answer at step **166** is affirmative, the master microprocessor enables the FDA alarms at step **168** before proceeding the step **170**. When the FDA alarm is enabled, the FDA alarm will sound if the passageway temperature falls below 140° F. If the answer at step **166** is negative, the master microprocessor continues to step **170** to determine whether the passageway temperature is within its alarm band. The alarm band is the predetermined range of holding temperature for the product selection in the left tray location of the passageway. If the answer at step **170** is negative, the

master microprocessor alternates "SLOT TEMP LOW" and the product selection at the highest intensity level on the lighted display of the display panel at step **172** before returning to step **142**. If the answer at step **170** is affirmative, the master microprocessor proceeds to the normal display mode routine.

FIGS. **7***a* and **7***b* are a flow chart of the normal display mode routine. In the normal display mode, the master controller illustrates the product selection on the lighted displays, monitors for operator input and controls product timers. At step **180** the master microprocessor displays the product selections on the lighted displays of the display panel at the low intensity level. At step **182** the master microprocessor determines whether the operator pressed the temperature/enter/page key. If the answer at step **182** is affirmative, the master microprocessor passes control to the temperature display mode which will be described in conjunction with FIGS. **1***a* and **1***b*. If the answer at step **182** is negative, the master microprocessor determines whether the operator pressed the menu key at step **184**. If the answer at step **184** is affirmative, the master microprocessor proceeds to the menu display mode which will be described in conjunction with FIGS. **8***a*, **8***b* and **8***c*. If the answer at step **184** is negative, the master microprocessor determines whether the operator selected the program mode at step **186**. If the answer at step **186** is affirmative, the master microprocessor goes to the program mode as described in conjunction with FIGS. **10***a* and **10***b*.

If the answer is at step **186** is negative, the master microprocessor executes the check for alarms routine which is described in detail in conjunction with FIGS. **9***a* and **9***b* at step **188**. At step **189**, the master microprocessor executes the check for UHC test mode routine which is described in detail in conjunction with FIGS. **13***a* and **13***b*. At step **190**, the master microprocessor determines whether a product timer is active. When a product timer is active, the product timer is counting down from the preset holding time. If the answer at step **190** is affirmative, the master microprocessor determines whether the operator pressed the product timer's corresponding timer key at step **192**. If the answer at step **192** is affirmative, the master microprocessor resets the product timer and updates the use first timer status at step **194** before returning to step **180**.

If the answer at step **190** is negative, the master microprocessor determines whether the operator pressed the timer key at step **196**. If the answer at step **196** is negative, the master microprocessor returns to step **182**. If the answer at step **196** is affirmative, the master microprocessor sets the product timer to begin count down from the predetermined holding time and updates the use first timer status at step **198** before proceeding to step **200**. If the answer at step **192** was negative, the master microprocessor moves to step **200**. At step **200** the master microprocessor determines whether the product timer is a use first timer. If the answer at step **200** is affirmative, the master microprocessor sets the corresponding lighted display to the highest intensity and illustrates running dots on the lighted display at step **202** before proceeding to step **206**. If the answer at step **200** is negative, the master microprocessor sets the display to medium intensity level two and proceeds to step **206**. At step **206**, the master microprocessor alternates the product time or holding time remaining on the product timer and the product selection on the lighted display. At step **208**, the master microprocessor determines whether the product timer has expired by decreasing to zero. If the answer at step **208** is negative, the master microprocessor returns to step **182**. If the answer at step **208** is affirmative, the master microprocessor displays "00" at intensity level three, sets all other active product timers to intensity level one and sounds an audible alarm at step **210**. At step **212** the master microprocessor determines whether the operator pressed the timer key corresponding to the time out alarm. If the answer at step **212** is negative, the master microprocessor returns to step **210**. If the answer at step **212** is affirmative, the master microprocessor resets the audible alarm, updates the use first timer status and resets active timers display status at step **214** before returning to step **180**.

FIGS. **8***a*, **8***b* and **8***c* is a flow chart of the menu display mode. In the menu display mode, the master microprocessor allows the operator to change meal selections, to enter the clean mode, and to turn a passageway on or off. At step **216** the master microprocessor illustrates the inactive meal selections on the lighted displays at the highest intensity level three. At step **218** the master microprocessor determines whether the operator pressed the temperature/enter/page key to enter the meal selection illustrated on the lighted displays. If the answer at step **218** is negative, the master microprocessor determines whether the temperature/enter/page key and the menu key have been inactive for five seconds at step **220**. If the answer at step **220** is affirmative, the master microprocessor returns to the previous mode. If the answer at step **220** is negative, the master microprocessor determines whether the menu key has been pressed at step **222**. If the answer at step **222** is affirmative, the master microprocessor illustrates the "CLN MODE" message at the highest intensity level three on the lighted displays at step **224** before continuing to step **240**. If the answer at step **222** is negative, the master microprocessor returns to step **218**.

If the answer to step **218** is affirmative, the master microprocessor determines whether any passageway timers are active at step **226**. If the answer at step **226** is negative, the master microprocessor illustrates the new meal product selections on the lighted displays and updates the passageway temperature setpoint to correspond to the new meal product selections at step **228** before returning to the previous mode. If the answer at step **226** is affirmative, the master microprocessor determines whether the passageway temperature set points of the previous product selections are identical to the passageway temperature set points of the new meal product selections at step **230**. If the answer at step **230** is affirmative, the master microprocessor waits until any active timers expire and the operator acknowledges the expired timers by pressing the corresponding timer key before illustrating the new meal product selections on the corresponding lighted displays at step **232**. If the answer at step **230** was negative, the master microprocessor determines whether the left timer is active at step **234**. If the answer at step **234** is affirmative, the master microprocessor waits until the left timer expires and the operator acknowledges the expired timer by pressing the left timer key before updating the passageway temperature setpoint to correspond to the left new product meal selection at step **236**. At step **236**, the master microprocessor also waits until the active timers for the center and right positions to expire and the operator to acknowledge the expired timers before illustrating the new meal product selections on the corresponding center and right lighted displays before returning to the previous mode. If the answer to step **234** is negative, the master microprocessor changes passageway temperature set point to the left new meal product selection at step **238**. The master microprocessor also waits until any active timers for the center and right positions to expire and the operator to acknowledge the expired timers before illustrating the new meal product selections on the corresponding center and

right lighted displays at step **238** before returning to the previous mode.

At step **240** the master microprocessor determines whether the temperature/enter/page key has been pressed to enter the clean mode. If the answer at step **240** is affirmative, the master microprocessor sets all the temperature set points of all the passageways to 125° F. at step **242**. To prevent the FDA and low temperature alarm from sounding, the master microprocessor inhibits the FDA and low temperature alarms for all of the passageways at step **242**. At step **244** the master microprocessor determines whether the passageway temperature is above 125° F. If the answer at step **244** is negative, the master microprocessor illustrates "SAFE TO CLN" on the lighted displays at the highest intensity level three at step **246** before proceeding to step **250**. If the answer at step **244** is affirmative, the master microprocessor illustrates "SLOT CLN MODE" on the lighted displays at the highest intensity level three for five seconds before messaging "NOT SAFE YET" at the highest intensity level three for one second.

At step **250** the master microprocessor determines whether the menu key has been pressed. If the answer at step **250** is negative, the master microprocessor returns to step **244**. If the answer at step **250** is affirmative, the master microprocessor messages "EXIT CLN MODE" on the lighted displays at the highest intensity level three at step **252**. At step **254**, the master microprocessor determines whether the temperature/enter/page key has been pressed to accept the "EXIT CLN MODE" message and exit the clean mode. If the answer at step **254** is affirmative, the master microprocessor returns to the normal display mode using the default breakfast product selections for illustration on the lighted displays and for updating the passageway setpoints. If the answer at step **254** is negative, the master microprocessor determines whether the temperature/enter/page key has been inactive for five seconds at step **256**. If the answer at step **256** is negative, the master microprocessor returns to step **252**. If the answer at step **256** is affirmative, the master microprocessor returns to step **244**.

If the answer at step **240** is negative, the master microprocessor determines whether the temperature/enter/page key has been inactive for five seconds at step **258**. If the answer at step **258** is affirmative, the master microprocessor returns to the previous mode. If the answer at step **258** is negative, the master microprocessor determines whether the menu key has been pressed at step **260**. If the answer at step **260** is negative, the master microprocessor returns to step **240**. If the answer at step **260** is affirmative, the master microprocessor illustrates "TURN SLOT OFF" on the lighted displays at the highest intensity level three at step **262** before proceeding to step **264**. At step **264**, the master microprocessor determines whether the temperature/enter/page key has pressed to accept the "TURN SLOT OFF" message. If the answer at step **264** is negative, the master microprocessor determines whether the temperature/enter/page key has been inactive for five seconds at step **266**. If the answer at step **266** is affirmative, the master microprocessor returns to the previous mode. If the answer at step **266** is negative, the master microprocessor determines whether the menu key has been pressed at step **268**. If the answer at step **268** is affirmative, the master microprocessor returns to the previous mode. If the answer at step **268** is negative, the master microprocessor returns to step **264**.

If the answer at step **264** was affirmative, the master microprocessor turns off the power to the heater plates for the passageway displaying the "TURN SLOT OFF" message at step **270** The master microprocessor also inhibits the FDA and low alarms to prevent those alarms from sounding and displays "SLOT OFF" on the lighted displays at the highest intensity level three at step **270**. At step **272**, the master microprocessor determines whether the menu key has been pressed. If the answer is negative, the master microprocessor returns to step **270**. If the answer to step **272** is affirmative, the master microprocessor illustrates "TURN SLOT ON" on the lighted displays at the highest intensity level three at step **274**. At step **276**, the master microprocessor determines whether the temperature/enter/page key has pressed to accept the "TURN SLOT ON" message. If the answer at step **276** is affirmative, the master microprocessor returns to the normal display mode using the default breakfast product selections for illustration on the lighted displays and for updating the passageway setpoints. If the answer at step **276** is negative, the master microprocessor determines whether the temperature/enter/page key has been inactive for five seconds at step **278**. If the answer at step **278** is negative, the master microprocessor returns to step **274**. If the answer at step **278** is affirmative, the master microprocessor returns to step **270**.

FIGS. **9***a* and **9***b* are a flow chart of the check for alarms routine. In the alarm display mode, the master microprocessor determines which temperature alarm is active and illustrates the appropriate messages on the lighted displays. At step **280** the master microprocessor determines whether the passageway temperature is above or below the sensor span of 55° F. to 260° F. If the answer to step **280** is affirmative, the master microprocessor alternates between illustrating "SENS ALRM" on the lighted displays at highest intensity level three for five seconds, and illustrating the product selection at the highest intensity level three for one second at step **282** before proceeding to step **298**. At step **284**, the master microprocessor determines whether the passageway temperature is above the high temperature limit. If the answer at step **284** is affirmative, the master microprocessor alternates between illustrating "SLOT TEMP HIGH" on the lighted displays at highest intensity level three for five seconds, and illustrating the product selection at the highest intensity level three for one second at step **286** before proceeding to step **296**. If the answer at step **284** is negative, the master microprocessor determines whether the passageway temperature is below the low temperature limit at step **288**. If the answer at step **288** if negative, the master microprocessor goes to the normal display mode.

If the answer at step **288** is affirmative, the master microprocessor determines whether the passageway temperature has been below the FDA temperature limit of 140° F. is for longer than the FDA time limit (default FDA time limit is two minutes) at step **290**. If the answer at step **290** is affirmative, the master microprocessor alternates between illustrating "SLOT UNDR FDA" on the lighted displays at highest intensity level three for five seconds, and illustrating the product selection at the highest intensity level three for one second at step **292** before proceeding to step **298**. If the answer to step **290** is negative, the master microprocessor alternates between illustrating "SLOT TEMP LOW" on the lighted displays at highest intensity level three for five seconds, and illustrating the product selection at the highest intensity level three for one second at step **294** before proceeding to step **296**.

At step **296**, the master microprocessor determines whether the alarm condition has existed longer than the alarm time limit (default alarm time limit is two minutes). If the answer at step **296** is negative, the master microprocessor returns to step **280**. If the answer at step **296** is affirmative, the master microprocessor determines whether

the alarms are enabled at step **298**. If the answer at step **298** is negative, the master microprocessor returns to step **280**. If the answer at step **298** is affirmative, the master microprocessor determines whether the audible alarm has been latched or acknowledged at step **300**. If the answer at step **300** is negative, the master microprocessor sounds and latches the audible alarm at step **302** before proceeding to step **304**. If the answer at step **300** is affirmative, the master microprocessor determines whether a timer key has been pressed to acknowledge the alarm at step **304**. If the answer at step **304** is negative, the master microprocessor returns to step **280**. If the answer at step **304** is affirmative, the master microprocessor silences and resets the audible alarm at step **306** before returning to step **280**.

FIGS. **10***a* and **10***b* is a flow chart of the program mode routine. In the program mode, the master microprocessor allows the operator to add, delete, edit product selection mnemonics, change product holding times, change holding temperatures, adjust display intensity levels, set amount of time the product selection and product time are displayed. At step **318** the master microprocessor monitors for the operator to press and hold the menu key for five seconds to enter and to exit the program mode. At step **320** the master microprocessor requires the operator to enter a password. To enter the password, the operator presses the temperature/enter/page key to scroll to the "VIEW PAGE" message. The operator then presses the menu key to scroll to the "SECR LOCK" message. At the "SECR LOCK" message, the operator uses the up/down arrow keys to enter in the proper four digit number. After the operator has entered in the correct password, the master microprocessor determines whether the temperature/enter/page key has been pressed at step **322**. If the answer at step **322** is affirmative, the master microprocessor illustrates the next page, for example "SLOT 1 PAGE", "SLOT 2 PAGE", "SLOT 3 PAGE", "SLOT 4 PAGE", on the lighted displays at step **324** prior to proceeding to step **326**. If the answer at step **322** is negative, the master microprocessor determines whether the menu key was pressed at step **326**. If the answer at step **326** is affirmative, the master microprocessor illustrates the next menu on the lighted displays, for example "BFST LEFT SAUS, BFST CENT SAUS, BFST RGHT SAUS", at step **328** prior to proceeding to step **330**.

If the answer at step **326** was negative, the master microprocessor determines whether the up/down selection arrow keys have been pressed at step **330**. If the answer at step **330** is affirmative, the master microprocessor determines whether illustrated message on the lighted displays is a string selection, for example "SAUS", "ROUN" or "FISH" at step **332**. If the answer at step **332** is affirmative, the master microprocessor scrolls through product selections such as "SAUS", "ROUN" and "FISH", illustrated on the lighted displays when up/down arrow keys are pressed at step **334** prior to proceeding to step **336**. If the answer at step **332** was negative, the master microprocessor determines whether the illustrated message on the lighted displays is a numeric selection, for example "2" at step **336**. If the answer at step **336** is affirmative, the master microprocessor increases or decreases the illustrated number when the up or down arrow key respectively are pressed at step **338** prior to proceeding to step **340**. If the answer at step **336** was negative, the master microprocessor determines whether the illustrated message on the lighted displays is a product mnemonic character at step **340**. If the answer at step **340** is affirmative, the master microprocessor scrolls the alpha and number characters for the up arrows and moves the decimal point to indicate digit at step **342** prior to proceeding to step **344**. If the answer at step **326** was negative, the master microprocessor determines whether the temperature/enter/page key, menu key and up/down arrow keys have been inactive for five minutes at step **344**. If the answer at step **344** is affirmative the master microprocessor returns to the previous mode. If the answer at step **344** is negative, the master microprocessor returns to step **322**.

FIGS. **11***a* and **11***b* are a flow chart of the temperature display mode routine. In the temperature display mode, the master microprocessor allows the operator to illustrate the temperature conditions on the lighted displays. At step **346** the master microprocessor illustrates the top plate temperature on the lighted displays, for example "TOP TEMP 160". At step **348** the master microprocessor determines whether the temperature/enter/page key has been inactive for 5 seconds. If the answer at step **348** is affirmative, the master microprocessor returns to the previous mode. If the answer at step **348** is negative, the master microprocessor determines whether the temperature/enter/page key has been pressed at step **350**. If the answer at step **350** is affirmative, the master microprocessor illustrates the bottom plate temperature on the lighted displays at step **352**, for example "BOT TEMP 160". If the answer at step **350** is negative, the master microprocessor returns to step **348**.

At step **354** the master microprocessor determines whether the temperature/enter/page key has been inactive for 5 seconds. If the answer at step **354** is affirmative, the master microprocessor returns to the previous mode. If the answer at step **354** is negative, the master microprocessor determines whether the temperature/enter/page key has been pressed at step **356**. If the answer at step **356** is affirmative, the master microprocessor illustrates the top heater plate set point on the lighted displays at step **358**, for example "TOP TSET 160". If the answer at step **356** is negative, the master microprocessor returns to step **354**. At step **360** the master microprocessor determines whether the temperature/enter/page key has been inactive for 5 seconds. If the answer at step **360** is affirmative, the master microprocessor returns to the previous mode. If the answer at step **360** is negative, the master microprocessor determines whether the temperature/enter/page key has been pressed at step **362**. If the answer at step **362** is affirmative, the master microprocessor illustrates the bottom heater plate set point on the lighted displays at step **364**, for example "BOT TSET 160". If the answer at step **362** is negative, the master microprocessor returns to step **358**. At step **366** the master microprocessor determines whether the temperature/enter/page key has been inactive for 5 seconds. If the answer at step **366** is affirmative, the master microprocessor returns to the previous mode. If the answer at step **366** is negative, the master microprocessor determines whether the temperature/enter/page key has been pressed at step **368**. If the answer at step **368** is affirmative, the master microprocessor returns to the previous mode. If the answer at step **368** is negative, the master microprocessor returns to step **364**.

FIGS. **12***a* and **12***b* are a flow chart of the display test mode. In the display test mode, the master microprocessor monitors the operator pressing the keys on the display panels to test cabinet. At step **370** the master microprocessor illustrates "DISP TEST MODE" on the lighted displays. At step **372**, the master microprocessor determines whether the front panel left timer key has been pressed. If the answer at step **372** is negative, the master microprocessor messages "KEY PRES ERR" on the lighted displays for three seconds at step **374** before returning to step **370**. If the answer at step **372** is affirmative, the master microprocessor determines whether the front panel up arrow key has been pressed at

step **376**. If the answer at step **376** is negative, the control goes to step **374**. If the answer at step **382** is affirmative, the master microprocessor determines whether the front panel down arrow key has been pressed at step **378**. If the answer at step **378** is negative, the control goes to step **374**.

If the answer at step **378** is affirmative, the master microprocessor determines whether the front panel center timer key has been pressed at step **380**. If the answer at step **380** is negative, the control goes to step **374**. If the answer at step **380** is affirmative, the master microprocessor determines whether the front panel temperature/enter/page key has been pressed at step **382**. If the answer at step **382** is negative, the control goes to step **374**. If the answer at step **382** is affirmative, the master microprocessor determines whether the front panel menu key has been pressed at step **384**. If the answer at step **384** is negative, the control goes to step **374**. If the answer at step **384** is affirmative, the master microprocessor determines whether the front panel right timer key has been pressed at step **386**. If the answer at step **386** is negative, the control goes to step **374**. If the answer at step **386** is affirmative, the master microprocessor determines whether the rear panel left timer key has been pressed at step **387**. If the answer at step **387** is negative, the control goes to step **374**. If the answer at step **387** is affirmative, the master microprocessor determines whether the rear panel center timer key has been pressed at step **388**. If the answer at step **388** is negative, control goes to step **374**. If the answer at step **388** is affirmative, the master microprocessor determines whether the rear panel right timer key has been pressed at step **389**.

If the answer at step **389** is negative, the master microprocessor returns to step **374**. If the answer at step **389** is affirmative, the master microprocessor tests the left display for one second at step **400**. At step **402** the master microprocessor determines whether the front panel temperature/enter/page key has been pressed. If the answer at step **402** is affirmative, the control goes to step **370**. If the answer at step **402** is negative, the master microprocessor tests the center display for one second at step **404**. At step **406** the master microprocessor determines whether the temperature/enter/page key has been pressed. If the answer at step **406** is affirmative, the control goes to step **370**. If the answer at step **406** is negative, the master microprocessor tests the right display for one second at step **408**. At step **410** the master microprocessor determines whether the temperature/enter/page key has been pressed. If the answer at step **410** is affirmative, the control goes to step **370**. If the answer at step **410** is negative, the master microprocessor goes to step **400**.

FIGS. **13***a* and **13***b* are a flow chart of the check for UHC test mode routine. In the check for UHC test mode, the master microprocessor determines whether the operator has entered the ULC test mode, and if so, tests the heater plates and allows the operator to edit the RTD sensor calibration offsets. At step **412**, the master microprocessor determines whether the operator has pressed and held down the left timer key and the right timer key of passageway **4** for five seconds. If the answer at step **412** is negative, the master microprocessor returns to the previous mode. If the answer at step **412** is affirmative, the master microprocessor illustrates "UHC TEST MODE" on the lighted displays and removes AC power from the heater plates of all passageways at step **414**.

At step **416**, the master microprocessor lights all display segments on the front and rear display panels for passageway **1** for two seconds. At step **418**, the master microprocessor supplies power to the top heater plate of passageway **1**. At step **420**, the master microprocessor determines whether fifteen seconds have passed. If the answer at step **420** is negative, the master microprocessor lights all display segments on the front and rear display panels for the next passageway for two seconds at step **422** before returning to step **420**. If the answer at step **420** is affirmative, the master microprocessor determines whether the heater plates of all passageways have been powered at step **424**. If the answer at step **424** is negative, the master microprocessor removes power from the currently powered heater plate and supplies power to the next heater plate at step **426** before returning to step **420**.

If the answer at step **424** is affirmative, the master microprocessor sets the heater plates of all passageways to 140° F. at step **428**. At step **430**, the master microprocessor illustrates each passageways top heater plate temperature on that passageway's lighted displays, for example "TOP TEMP XX". At step **432**, the master microprocessor illustrates each passageways bottom heater plate temperature on that passageway's lighted displays, for example "BOT TEMP XX". At step **434**, the master microprocessor, the master microprocessor determines whether the operator has pressed and held down the left timer key and the right timer key of passageway **4** for five seconds. If the answer at step **434** is negative, the master microprocessor returns to step **430**. If the answer at step **434** is affirmative, the master microprocessor displays passageway **1**'s top plate offset value at step **436**. At step **438**, the master microprocessor allows the operator to use the temperature/enter/page key, the menu key and the up/down arrow keys to select and adjust the sensor offsets for each passageway. At step **440**, the master microprocessor determines whether the operator has pressed and held down the left timer key and the right timer key of passsageway **4** for five seconds. If the answer at step **440** is negative, the master microprocessor returns to step **438**. If the answer at step **440** is affirmative, the master microprocessor returns to the previous mode.

The above description and several embodiments disclosed herein are made by way of example and not for purposes of limitation. Many variations may be made to the embodiments disclosed without departing from the scope and spirit of the present invention.

What is claimed is:

1. A cabinet for maintaining containers of food within a predetermined temperature range for a period of time not exceeding a predetermined maximum time, comprising:

a housing having a front panel and a passageway opening at said front panel, said passageway capable of receiving at least two containers of food;

a temperature element positioned in said passageway for maintaining said passageway within said predetermined temperature range;

a processing circuit for tracking the amount of time each container of food remains within said passageway and for providing a signal output indicating which container of food has been within said passageway the longest, and for providing an alarm signal when either container of food remains within said passageway beyond said predetermined maximum time; and

a display positioned on said housing proximate to said passageway for receiving said signal output and indicating which container of food has been within said passageway the longest, and for receiving said alarm signal and indicating which container of food has been within said passageway for a period of time exceeding said predetermined maximum time.

2. The cabinet of claim **1** wherein said processing circuit further provides a time signal for each container of food

indicating the amount of time remaining before said predetermined maximum time is exceeded, said display receives said time signal for each container of food and indicates the amount of time remaining before said predetermined maximum time is exceeded.

3. The cabinet of claim **1** wherein said display has at least two display intensity levels, said display indicates which container of food has been within said passageway the longest by associating the highest display intensity level with that container of food.

4. The cabinet of claim **1** further comprising a means for providing a start signal indicating that a container of food has been placed within said passageway, said processing circuit receives said start signal and tracks the amount of time the container of food remains within said passageway.

5. The cabinet of claim **4** wherein said means for providing the start signal is an operator interface positioned on said housing proximate to said passageway.

6. The cabinet of claim **1** further comprising a means for providing a stop signal indicating that a container of food has been removed from said passageway, said processing circuit receives said stop signal and stops tracking the amount of time the container of food remains within said passageway.

7. The cabinet of claim **6** wherein said means for providing the stop signal is an operator interface.

8. The cabinet of claim **1** wherein said processing circuit provides product category signals indicating a product category for each container of food, said display receives said product category signals and indicates the product category for each container of food.

9. The cabinet of claim **8** further including an operator interface positioned on said housing proximate to said passageway for providing a change product category signal indicating a new product category for a container of food, a memory holding a predetermined temperature range and a predetermined maximum time for each product category, said memory upon receiving said change product category signal provides a signal representing said new product category, said processing circuit receives said change product category signal and said representing signal from said memory to set a new predetermined temperature range and a new predetermined maximum time corresponding to said new product category for the container of food.

10. A cabinet for maintaining containers of a first food and containers of a second food within a first and second predetermined temperature range respectively for a period of time not exceeding a predetermined first and second maximum time respectively, comprising:

a housing having a front panel, a first passageway and second passageway both opening at said front panel, said first passageway capable of receiving at least two containers of the first food and said second passageway capable of receiving at least two containers of the second food;

a temperature element in each of said passageways for maintaining said first passageway within said first predetermined temperature range and said second passageway within said second predetermined temperature range;

means for identifying the presence of said containers of food within said passageways;

a processing circuit for tracking the amount of time each container of food remains within its respective passageway and for providing output signals indicating which container of food in each of said passageways has been in its respective passageway the longest and for providing an alarm signal when any container of food remains in its respective passageway beyond its respective predetermined maximum time; and

a display positioned on said housing proximate to said passageways for receiving said output signals and for indicating which container of food in each of said passageways has been in its respective passageway the longest, and for receiving said alarm signal and for indicating which container of food has been within its respective passageway for a period of time exceeding its respective predetermined maximum time.

11. The cabinet of claim **10** wherein said first predetermined maximum time equals said second predetermined maximum time.

12. The cabinet of claim **11** wherein said first predetermined temperature range equals said second predetermined temperature range.

13. The cabinet of claim **10** wherein said first predetermined temperature range equals said second predetermined temperature range.

14. The cabinet of claim **10** wherein said processing circuit provides a time signal for each container of food indicating an amount of time remaining before its respective predetermined maximum time is exceeded, said display receives said time signal for each container of food and indicates the amount of time remaining before the respective predetermined maximum time for each container of food is exceeded.

15. The cabinet of claim **10** wherein said display has at least two display intensity levels, said display indicates which container of food in each of said passageways has been in its respective passageway the longest by associating the highest display intensity level with that container of food.

16. The cabinet of claim **10** wherein said identifying means comprises an operator interface positioned on said housing proximate to said passageway, said operator interface providing a start signal indicating that a container of food has been placed within one of said passageways, said processing circuit receives said start signal and tracks the amount of time the container of food remains within its respective passageway.

17. The cabinet of claim **10** wherein said identifying means comprises a sensor positioned within said passageway providing a start signal indicating that a container of food has been placed within one of said passageways, said processing circuit receives said start signal and tracks the amount of time the container of food remains within its respective passageway.

18. The cabinet of claim **10** wherein said identifying means comprises an operator interface positioned on said housing proximate to said passageway, said operator interface providing a stop signal indicating that a container of food has been removed from one of said passageways, said processing circuit receives said stop signal and stops tracking the amount of time the container of food remains within its respective passageway.

19. The cabinet of claim **10** wherein said identifying means comprises a sensor positioned within said passageway providing a stop signal indicating that a container of food has been removed from one of said passageways, said processing circuit receives said stop signal and stops tracking the amount of time the container of food remains within its respective passageway.

20. The cabinet of claim **10** wherein said processing circuit further provides a first product category signal indicating a first product category and a second product category

signal indicating a second product category, said display receives said first product category signal and said second product category signal and indicates said first product category and said second product category.

21. The cabinet of claim **10** wherein said display comprises a first display positioned on said housing proximate to said first passageway for receiving said first output signal and for indicating which container has been in said first passageway the longest and for receiving said first alarm signal and for indicating which container has been in said first passageway for a period of time exceeding said first predetermined maximum time, and a second display positioned on said housing proximate to said second passageway for receiving said second output signal and for indicating which container has been in said second passageway the longest and for receiving said second alarm signal and for indicating which container has been in said second passageway for a period of time exceeding said second predetermined maximum time.

22. The cabinet of claim **21** wherein said first display comprises a first address means for uniquely identifying said first display and allowing only the reception of signals intended for said first display and said second display comprises a second address means for uniquely identifying said second display and allowing only the reception of signals intended for said second display.

23. The cabinet of claim **22** wherein said first addressing means comprises a first and second address line, said first address line receiving an address signal corresponding to said first passageway, and said second address means comprises a first and second address line, said second address line receiving said address signal corresponding to said second passageway.

24. A control system for maintaining within a predetermined temperature range for a period of time not exceeding a predetermined maximum time at least two containers of food within a cabinet having a passageway capable of holding the containers of food, a heating device and a temperature sensor positioned in the passageway and a display mounted on the cabinet proximate to the passageway, said control system comprising:

a temperature circuit for controlling the heating device and maintaining the passageway within the predetermined temperature range; and

a processing circuit for tracking the amount of time each container of food remains within the passageway and for providing a signal output to the display indicating which container of food has been within the passageway the longest, and for providing an alarm signal to the display when any container of food remains within the passageway beyond the predetermined maximum time.

25. The control system of claim **24** wherein the display comprises an automatic sensor positioned in the passageway to detect a container of food placed in the passageway.

26. The control system of claim **24** wherein said processing circuit further provides to the display a time signal for each container of food indicating the amount of time remaining before the predetermined maximum time is exceeded.

27. The control system of claim **25** wherein said processing circuit receives a start signal from the display indicating that a container of food has been placed within the passageway, said processing circuit upon receiving said start signal tracks the amount of time the container of food remains within the passageway.

28. The control system of claim **25** wherein said processing circuit further receives a stop signal from the display indicating a container of food has been removed from the passageway, said processing circuit upon receiving said stop signal stops tracking the amount of time the container of food remains within the passageway.

29. The control system of claim **24** wherein said processing circuit further provides a product category signal to the display indicating a product category for each container of food.

30. The control system of claim **29** further comprising a memory for holding a predetermined temperature range and a predetermined maximum time for each product category, said memory receives a change category signal from the display indicating a new product category for a container of food, said memory upon receiving said change product category signal provides a signal representing said new category, said processing circuit receives said change product category signal and said representing signal from said memory to set a new predetermined temperature range and a new predetermined maximum time corresponding to said new product category for the container of food.

31. The control system of claim **24** wherein said temperature circuit is capable of receiving a temperature signal from the temperature sensor, said temperature signal indicating the passageway is not within the predetermined temperature range, said temperature circuit upon receiving said temperature signal sends a heat signal to the heating device to maintain the passageway within the predetermined temperature range.

32. A control system for use in a cabinet having a housing with a front panel, a first and second passageway opening at the front panel, a first heating device and first temperature sensor positioned in the first passageway, a second heating device and a second temperature sensor positioned in the second passageway, a first display positioned on the front panel proximate the first passageway and a second display positioned on the front panel proximate the second passageway, said control system maintaining at least two containers of a first food product within the first passageway within a first predetermined temperature range for a period of time not exceeding a first predetermined maximum time and at least two containers of a second food product within the second passageway within a second predetermined temperature range for a period of time not exceeding a second predetermined maximum time, said control system comprising:

a temperature circuit for controlling the first heating device and the second heating device and maintaining the first passageway within the first predetermined temperature range and maintaining the second passageway within the second predetermined temperature range;

a processing circuit for tracking the amount of time each container of food remains within its respective passageway and for providing output signals to the first display and the second display indicating which container of food in each of said passageways has been in the respective passageway the longest and for providing an alarm signal to the first display a second display when a container of food remains in its respective passageway beyond its respective predetermined maximum time.

33. The control system of claim **32** wherein said first predetermined maximum time equals said second predetermined maximum time.

34. The control system of claim **33** wherein said first predetermined temperature range equals said second predetermined temperature range.

35. The control system of claim 32 wherein said first predetermined temperature range equals said second predetermined temperature range.

36. The control system of claim 32 wherein said processing circuit further provides a first time signal to the first display for each container of the first food product indicating the amount of time remaining before the first predetermined maximum time is exceeded, and a second time signal to the second display for each container of the second food product indicating the amount of time remaining before the second predetermined maximum time is exceeded.

37. The control system of claim 32, wherein the first display includes a first automatic sensor positioned in the first passageway to detect a container of first food product placed in the first passageway, the second display includes a second automatic sensor positioned in the second passageway to detect a container of the second said food product place in the second passageway.

38. The control system of claim 37 wherein said processing circuit capable of receiving a first start signal from the first display indicating that a container of the first food product has been placed within the first passageway and a second start signal from the second display indicating that a container of the second food product has been placed within the second passageway, said processing circuit upon receiving said first start signal tracks the amount of time the container of the first food product remains within the first passageway, said processing circuit upon receiving said second start signal tracks the amount of time the container of the second food product remains within the second passageway.

39. The control system of claim 37 wherein said processing circuit is capable of receiving a first stop signal from the first display indicating that a container of the first food product has been removed from the first passageway and a second stop signal from the second display indicating that a container of the second food product has been removed from the second passageway, said processing circuit upon receiving said first stop signal stops tracking the amount of time the container of the first food product remains within the first passageway, said processing circuit upon receiving said second stop signal stops tracking the amount of time the container of the second food product remains within the second passageway.

40. The control system of claim 32 wherein said processing circuit further provides a first product category signal to the first display indicating a product category for each container of first food product and a second product category signal to the second display indicating the product category for each container of second food product.

41. The control system of claim 40 further comprising a memory for holding a predetermined temperature range and a predetermined maximum time for each product category, said memory capable of receiving a first change category signal from the first display indicating a new first product category for the container of the first food product, said memory upon receiving said first change category signal provides a first signal representing said new first product category, said processing circuit capable of receiving said first representing signal and said first change product category signal from said memory to set a new first predetermined temperature range and a new first predetermined maximum time corresponding to said new first product category for the container of the first food product, said memory is further capable of receiving a second change category signal from the second display indicating a new second product category for the container of the second food product, said memory upon receiving said second change category signal provides a second signal representing said new second product category, said processing circuit capable of receiving said second representing signal and said second change product category signal from said memory to set a new second predetermined temperature range and a new second predetermined maximum time corresponding to said new second product category for the container of the second food product.

42. The control system of claim 32 wherein said temperature circuit is capable of receiving a first temperature signal from the first temperature sensor and the second temperature signal from the second temperature sensor, said first temperature signal indicating the first passageway is not within said first predetermined temperature range, said temperature circuit upon receiving said first temperature signal sends a first heat signal to the first heating device to maintain the first passageway within the first predetermined temperature range, said second temperature signal indicating the second passageway is not within said second predetermined temperature range, said temperature circuit upon receiving said second temperature signal sends a second heat signal to the second heating device to maintain the second passageway within the second predetermined temperature range.

43. The control system of claim 32 further comprises a first address means for uniquely identifying the first display and allowing only the signals intended for the first display to be transmitted to the first display and a second address means for uniquely identifying the second display and allowing only the signals intended for the second display to be transmitted to the second display.

44. A method for maintaining within a predetermined temperature range for a period of time not exceeding a predetermined maximum time at least two containers of food within a cabinet having a passageway capable of holding the containers of food, a heating device mounted in the passageway and a display mounted on the cabinet proximate to the passageway, said method comprising the steps:

maintaining the passageway within the predetermined temperature range;

tracking the amount of time each container of food remains within the passageway;

indicating on the display which container of food has been within the passageway the longest; and

indicating on the display when a container of food remains within the passageway beyond the predetermined maximum time.

45. The method of claim 44 further comprising the step of indicating on the display the amount of time remaining before the predetermined maximum time is exceeded for each container.

46. The method of claim 44 further comprising the step of determining when a container of food is placed within the passageway and then starting to track the amount of time the container of food remains within the passageway.

47. The method of claim 44 further comprising the steps of determining when a container of food is removed from the passageway and then stopping to track the amount of time the container of food remains within the passageway.

48. The method of claim 44 further comprising the step of indicating on the display a product category for each container of food.

49. A method for maintaining at least two containers of a first food product within a first passageway of a cabinet within a first predetermined temperature range for a period of time not exceeding a first predetermined maximum time

and at least two containers of a second food product within a second passageway of the cabinet within a second predetermined temperature range for a period of time not exceeding a second predetermined maximum time, said cabinet having a housing with a front panel, said first and second passageway opening at the front panel, a first heating device positioned in the first passageway, a second heating device positioned in the second passageway, a first display positioned on the front panel proximate the first passageway and a second display positioned on the front panel proximate the second passageway, said method comprising the steps:

maintaining the first passageway within the first predetermined temperature range and maintaining the second passageway within the second predetermined temperature range;

tracking the amount of time each container of food remains within its respective passageway;

indicating which container of food in each of said passageways has been in its respective passageway the longest; and

indicating when a container of food remains in its respective passageway beyond its respective predetermined maximum time.

50. The cabinet of claim **49** wherein said first predetermined maximum time equals said second predetermined maximum time.

51. The cabinet of claim **49** wherein said first predetermined temperature range equals said second predetermined temperature range.

52. The cabinet of claim **49** wherein said first predetermined temperature range equals said second predetermined temperature range.

53. The method of claim **49** further comprising the step of indicting on the first display and the second display the amount of time remaining before its respective predetermined maximum time is exceeded for each container of food.

54. The method of claim **49** further comprising the step of determining when a container of the first food product is placed within the first passageway and then tracking the amount of time the container of the first food product remains within the first passageway and determining when a container of the second food product is placed within the second passageway and then tracking the amount of time the container of the second food product remains within the second passageway.

55. The method of claim **49** further comprising the step of determining when a container of the first food product is removed from the first passageway and then ceasing to track the amount of time the container of the first food product remains within the first passageway and determining when a container of the second food product is removed from the second passageway and then ceasing to track the amount of time the container of the second food product remains within the second passageway.

56. The method of claim **49** further comprising the steps of indicating on the first display a first product category for each container of the first food product and indicating on the second display a second product category for each container of the second food.

57. The method of claim **49** further comprising the steps of allowing only the signals intended for the first display to be transmitted to the first display and allowing only signals intended for the second display to be transmitted to the second display.

* * * * *