US 20140010937A1

(19) United States

(12) Patent Application Publication

Stanger

(10) Pub. No.: US 2014/0010937 A1

(43) Pub. Date: Jan. 9, 2014

(54) **MOIST AND CRISPY PRODUCT HOLDING CABINET WITH HEATED AIRFLOW**

(71) Applicant: **The Delfield Company LLC**, Mt. Pleasant, MI (US)

(72) Inventor: **Keith A. Stanger**, Trinity, FL (US)

(21) Appl. No.: **13/923,886**

(22) Filed: **Jun. 21, 2013**

Related U.S. Application Data

(60) Provisional application No. 61/664,688, filed on Jun. 26, 2012.

Publication Classification

(51) **Int. Cl.**
A47J 39/00 (2006.01)

(52) **U.S. Cl.**
CPC *A47J 39/003* (2013.01); *A47J 39/006* (2013.01)
USPC **426/520**; 99/483; 99/474

(57) **ABSTRACT**

A food holding cabinet having at least one heating chamber for holding at least one food tray therein, the cabinet comprising: a housing that defines the heating chamber and a heating chamber opening for access to the heating chamber, wherein the heating chamber comprises an top portion, front portion, a rear portion, and at least one tray location for receiving a food tray; a jet plate including a plurality of apertures, the jet plate is disposed between the heating chamber and an upper plenum, wherein the upper plenum is formed between an upper surface of the jet plate and a lower surface of the top portion of the heating chamber; and a blower positioned to provide heated gas into the upper plenum, wherein the gas exits the upper plenum through the apertures into the heating chamber such that it is direct substantially toward the food tray.

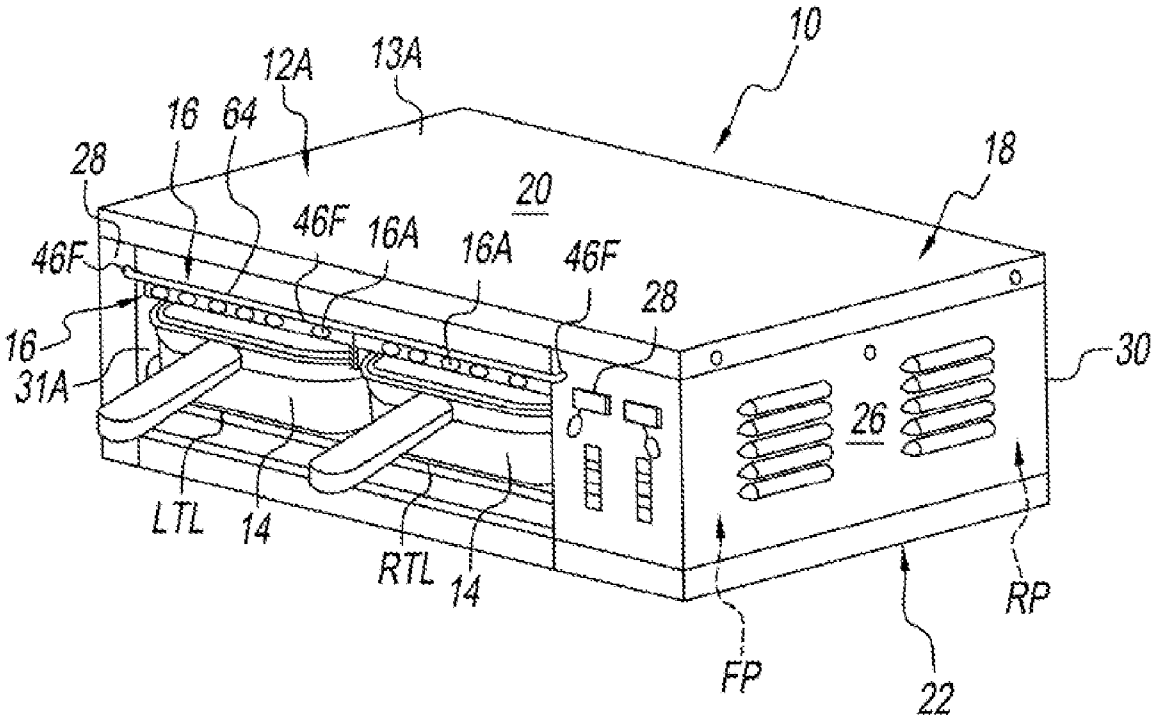

Duke Manufacturing Co. EX1042
U.S. Patent No. 9,976,750

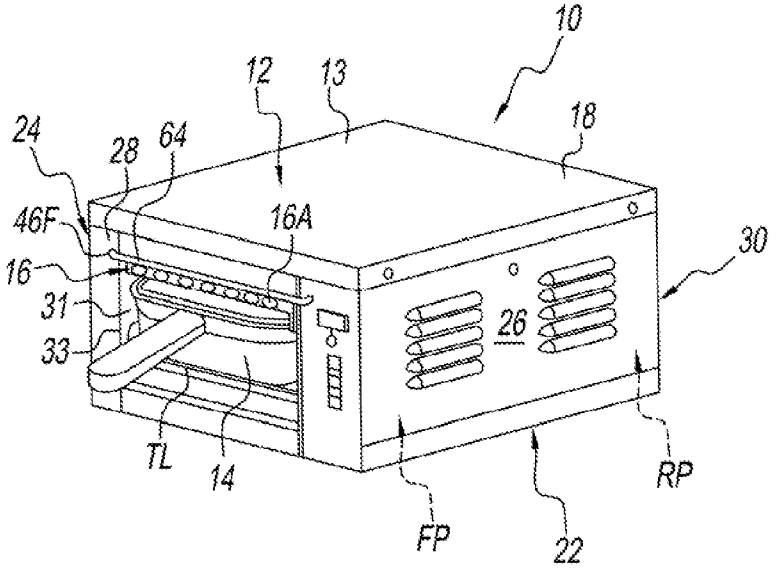
10
12
13
18
24
28
64
46F
16A
30
16
31
26
33
TL
14
RP
FP
22

FIG. 1

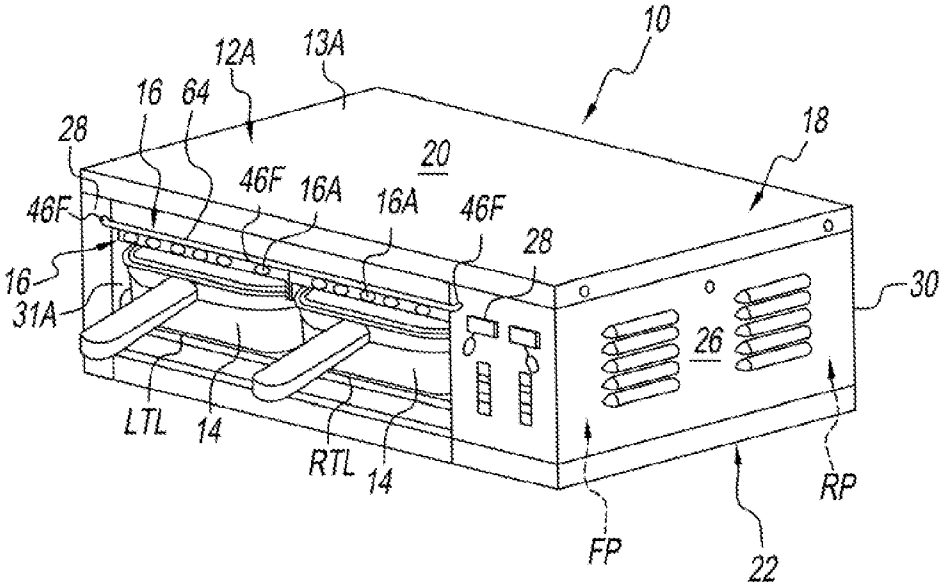
10
12A
13A
16
64
28
18
20
46F
16A
16A
46F
28
46F
16
30
31A
26
LTL
14
RTL
14
RP
FP
22

FIG. 1A

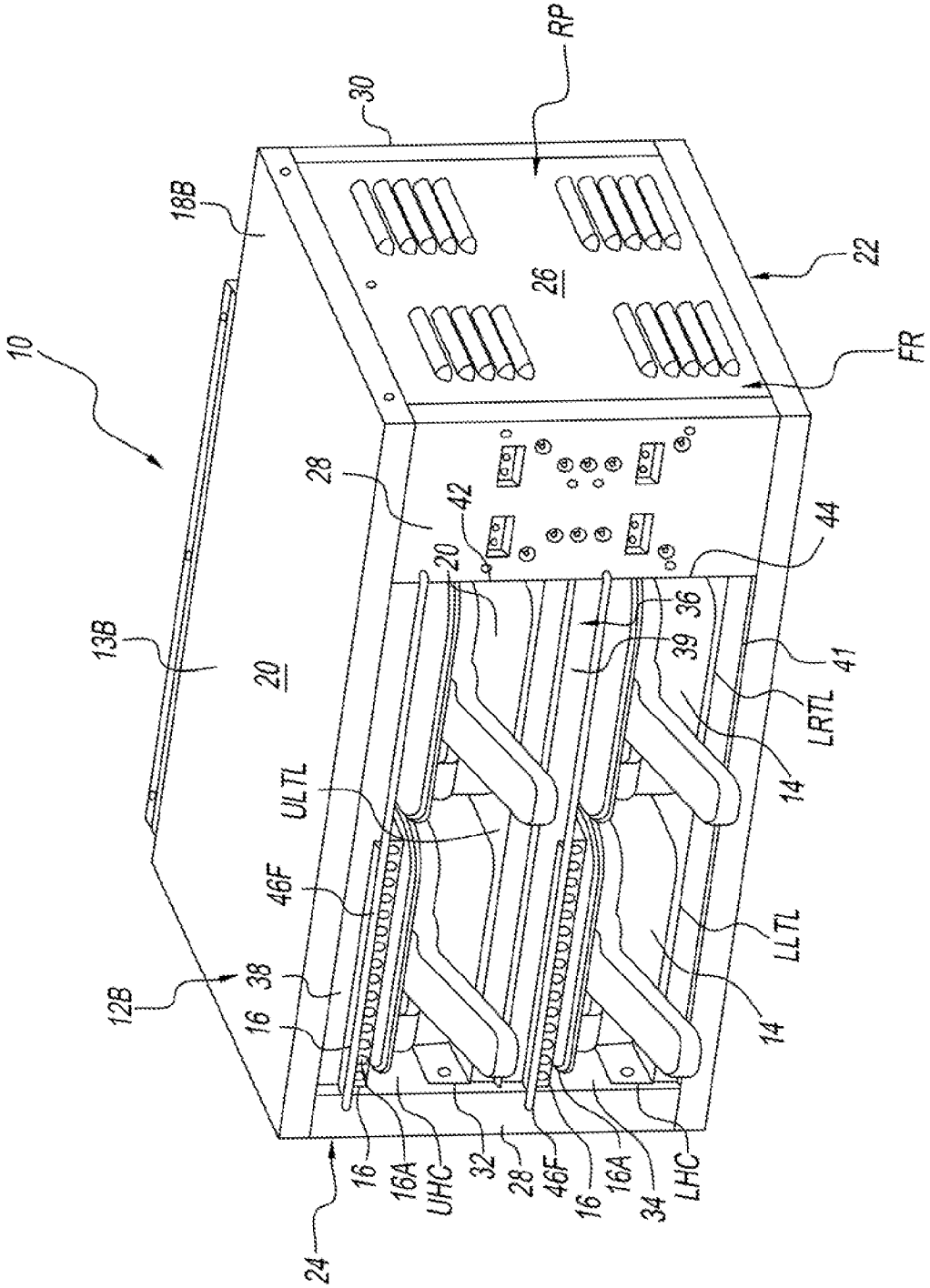
10
12B
13B
18B
20
22
24
26
28
30
32
34
36
38
39
41
42
44
46F
16
16A
UHC
LHC
ULTL
LLTL
LRTL
14
RP
FR

FIG. 1B

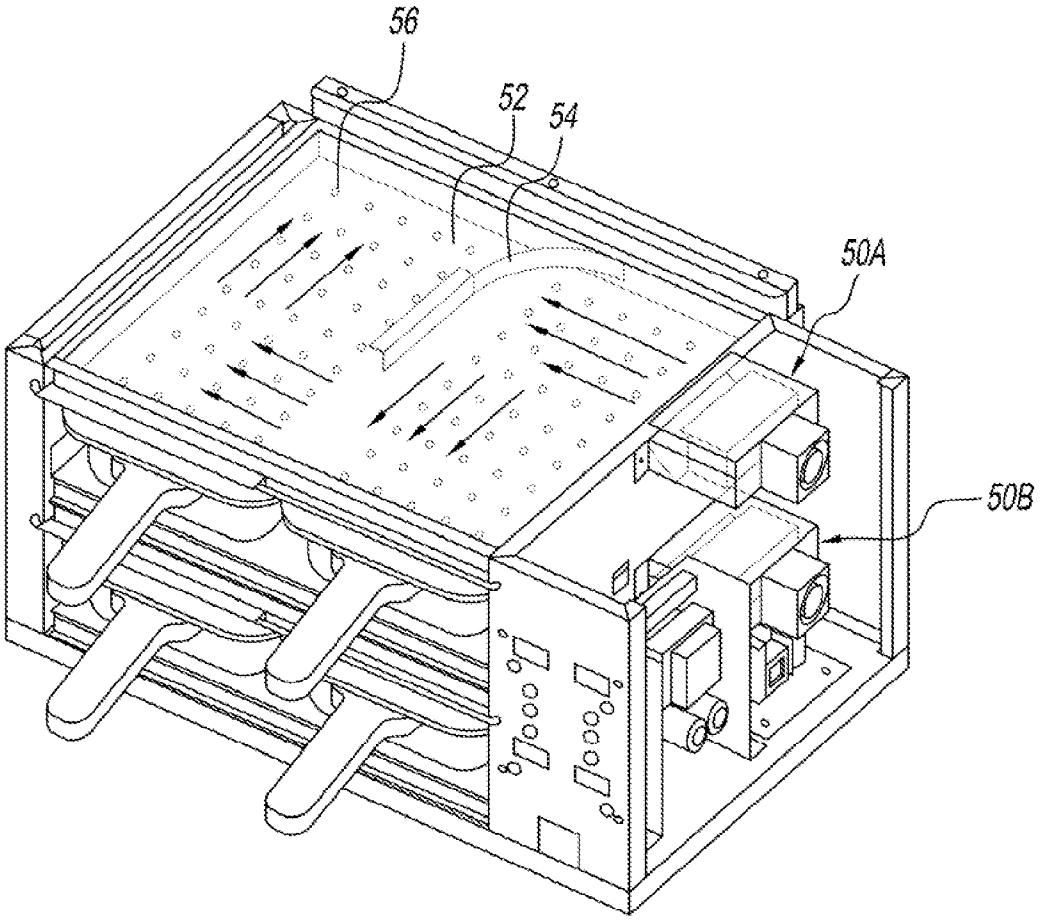

FIG. 2

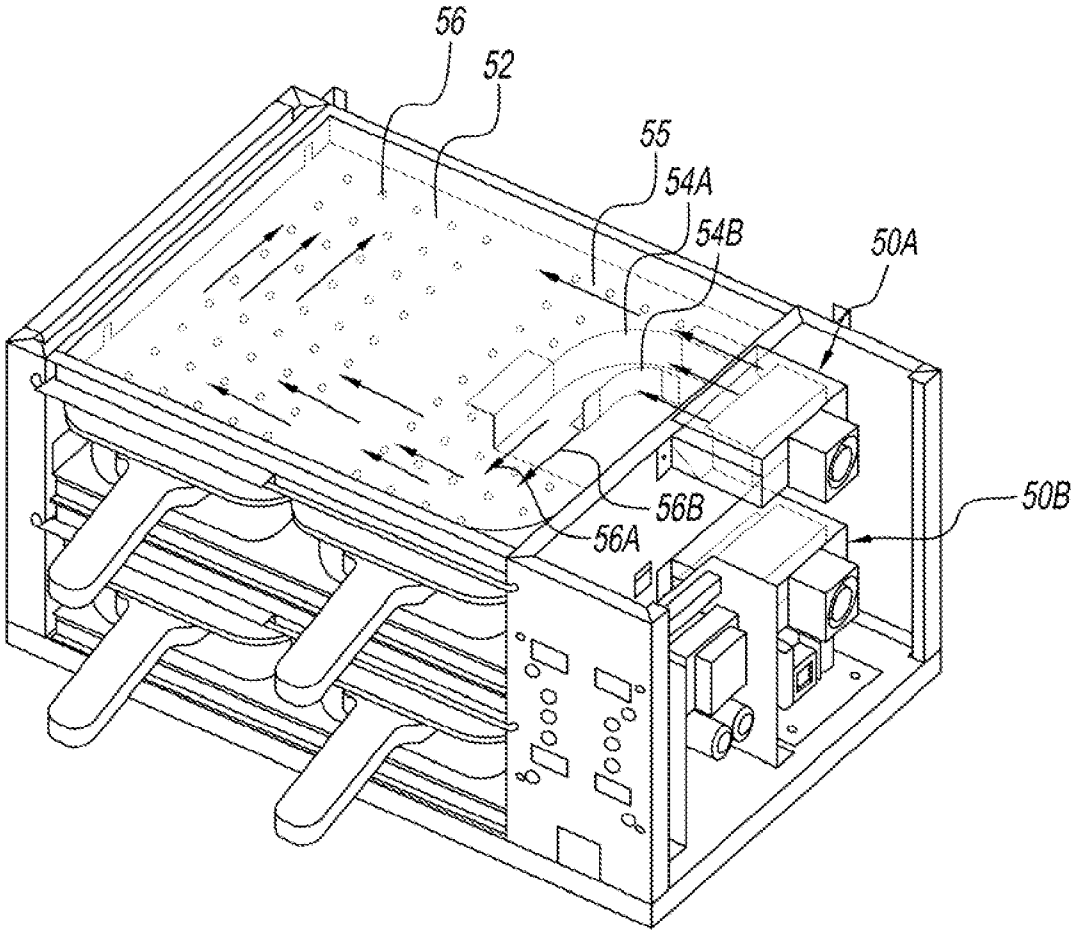

FIG. 2A

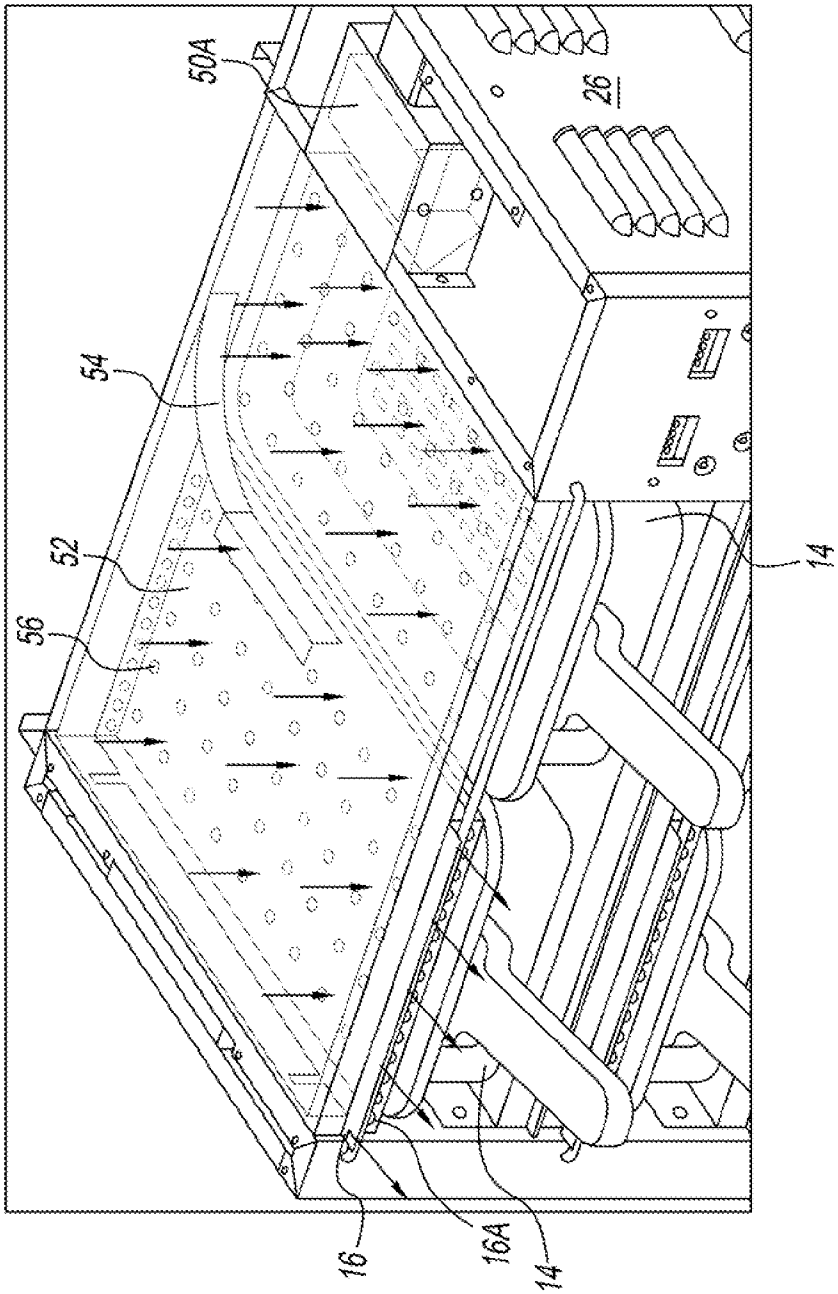

FIG. 3

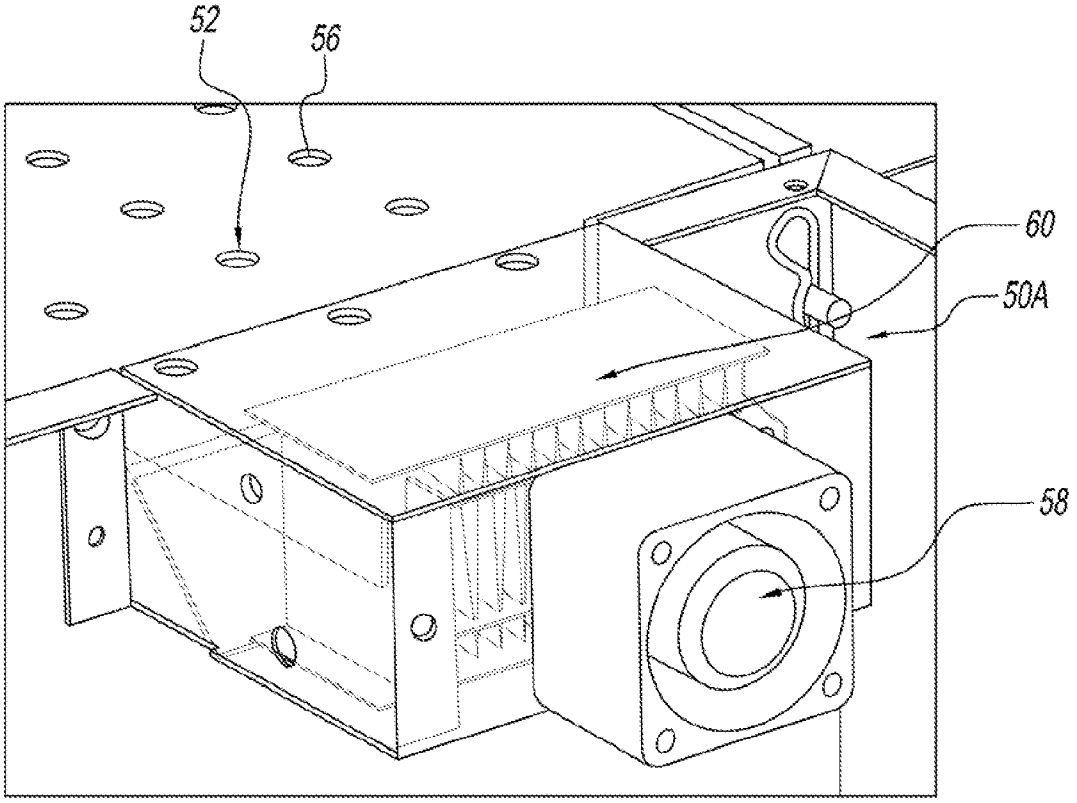

FIG. 4

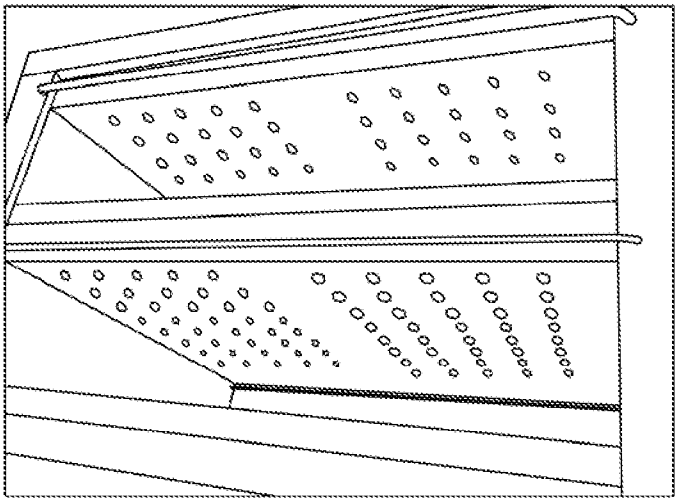

FIG. 5

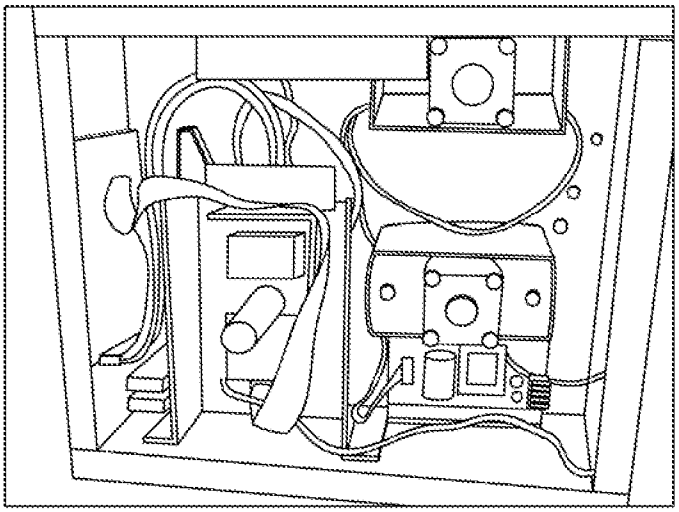

FIG. 6

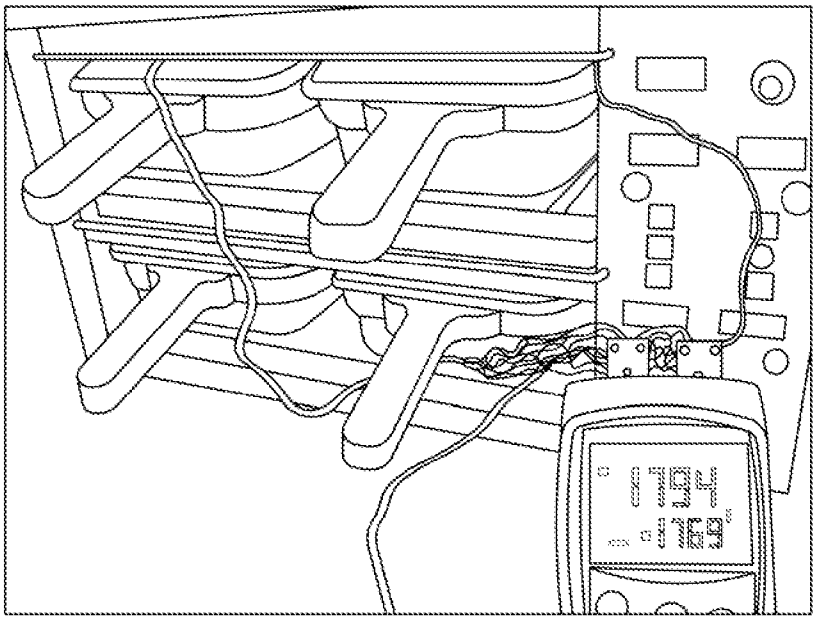

FIG. 7A

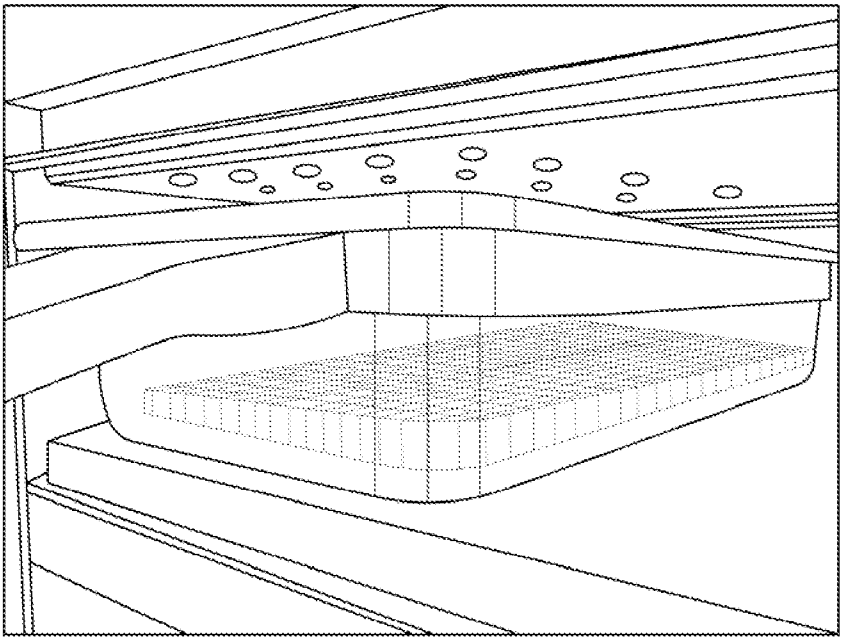

FIG. 7B

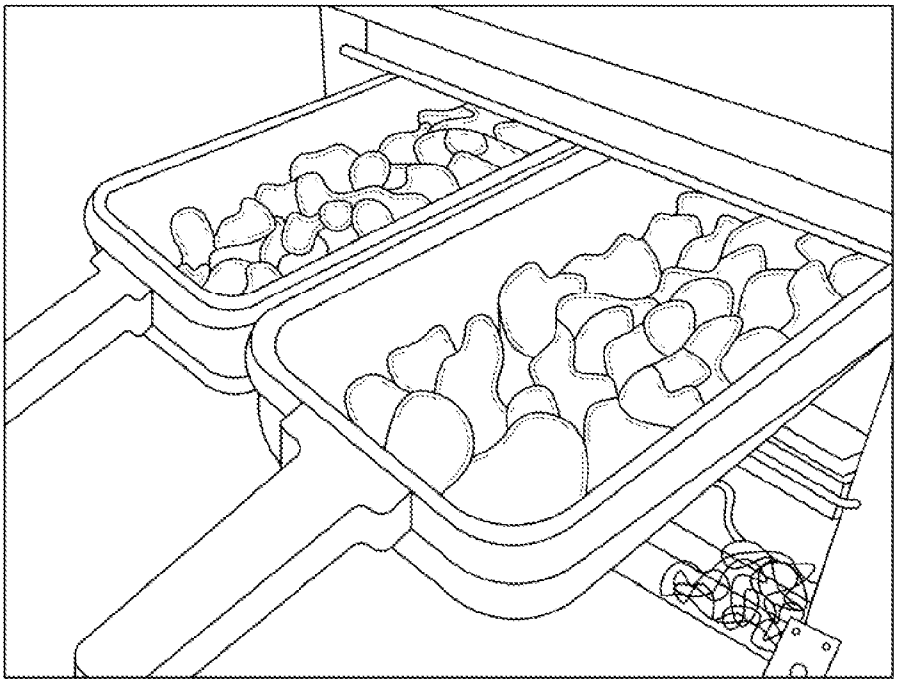

FIG. 7C

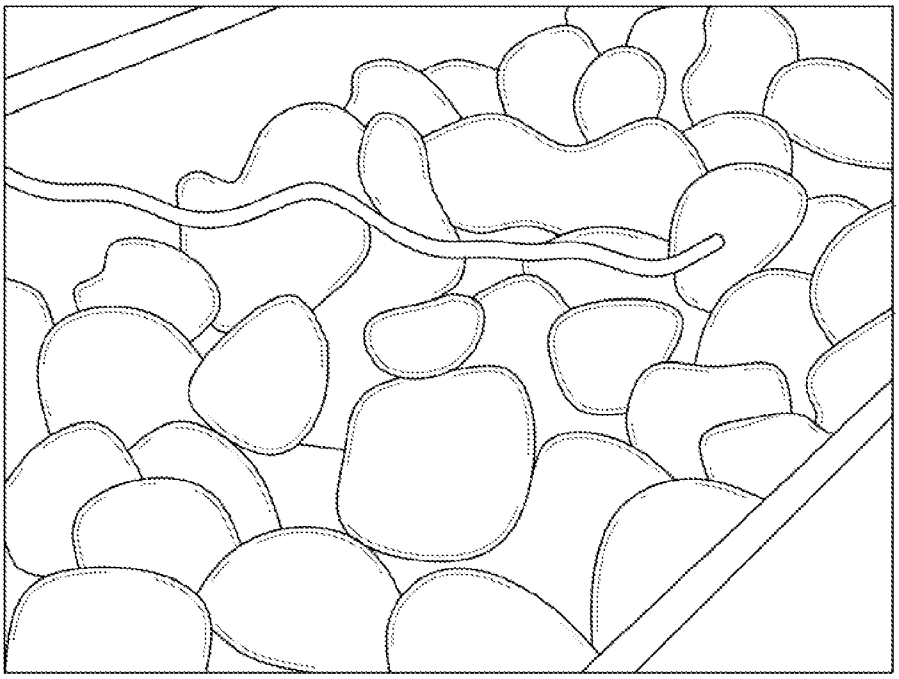

FIG. 7D

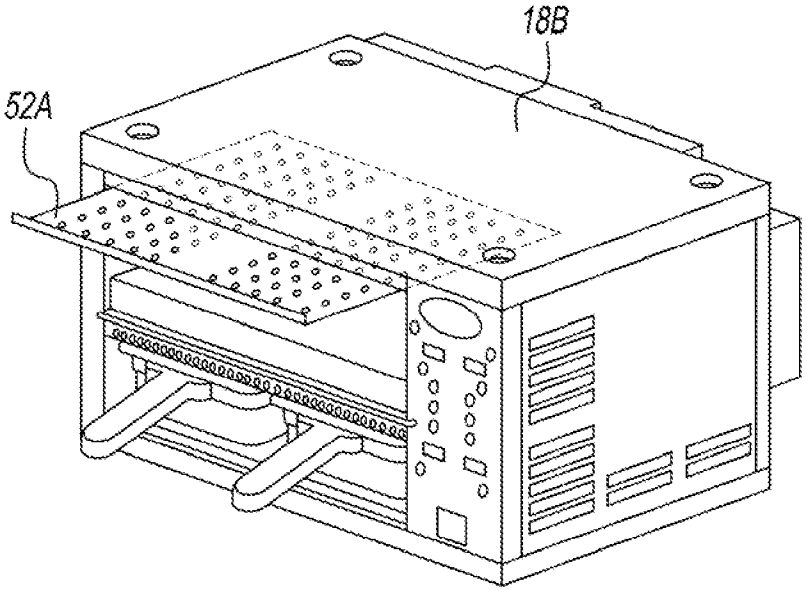

FIG. 8A

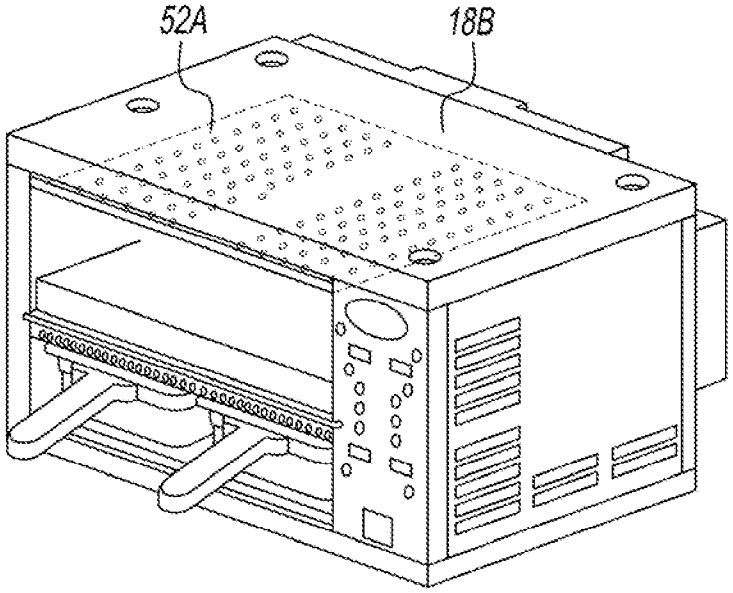

FIG. 8B

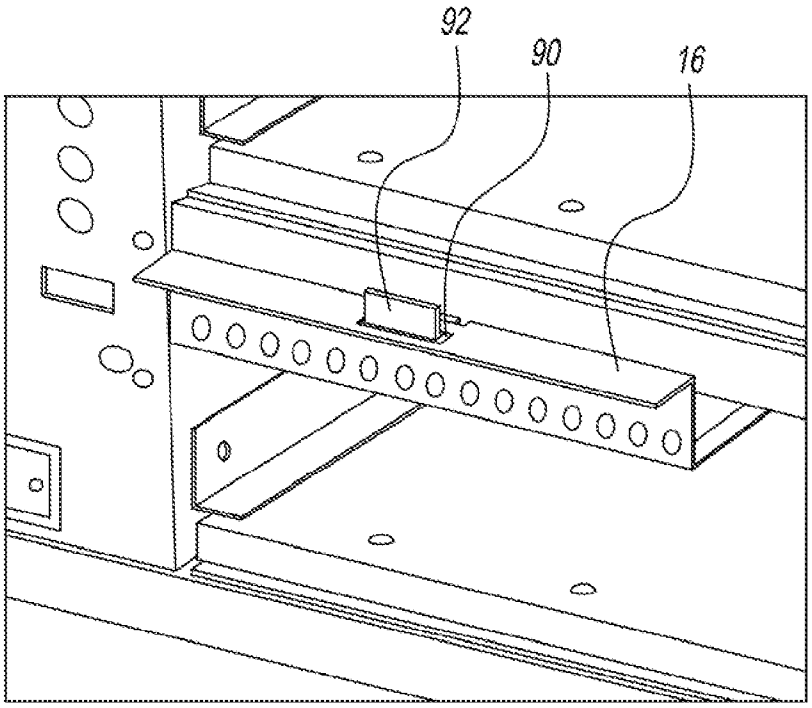

FIG. 9A

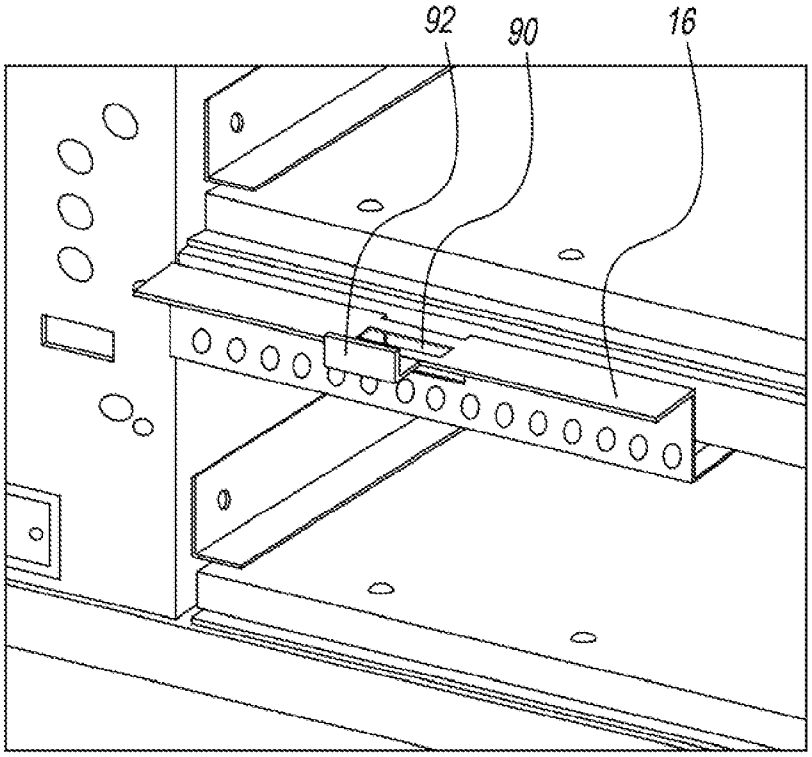

FIG. 9B

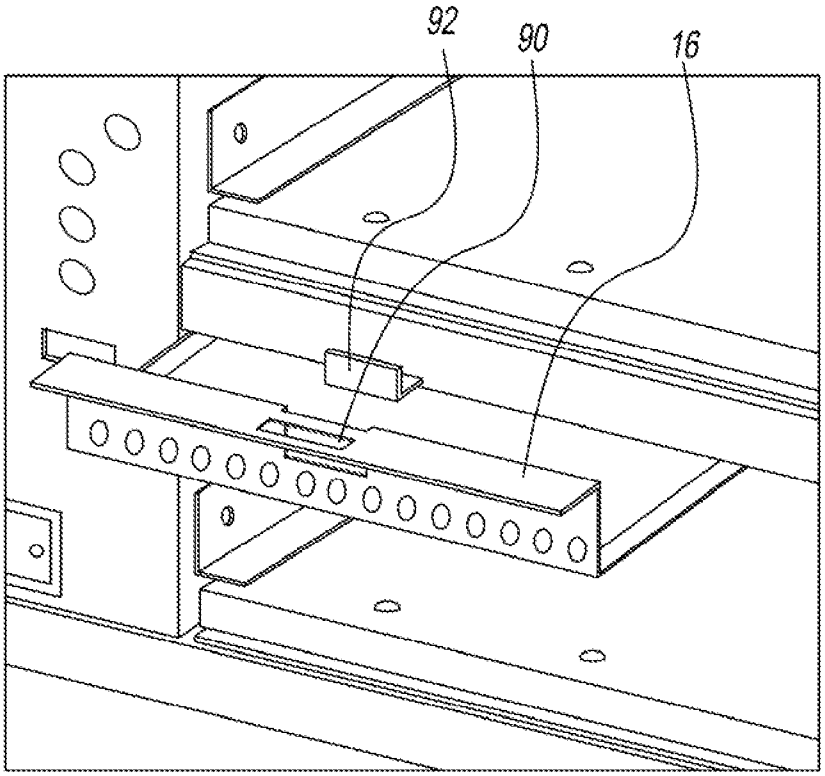

FIG. 9C

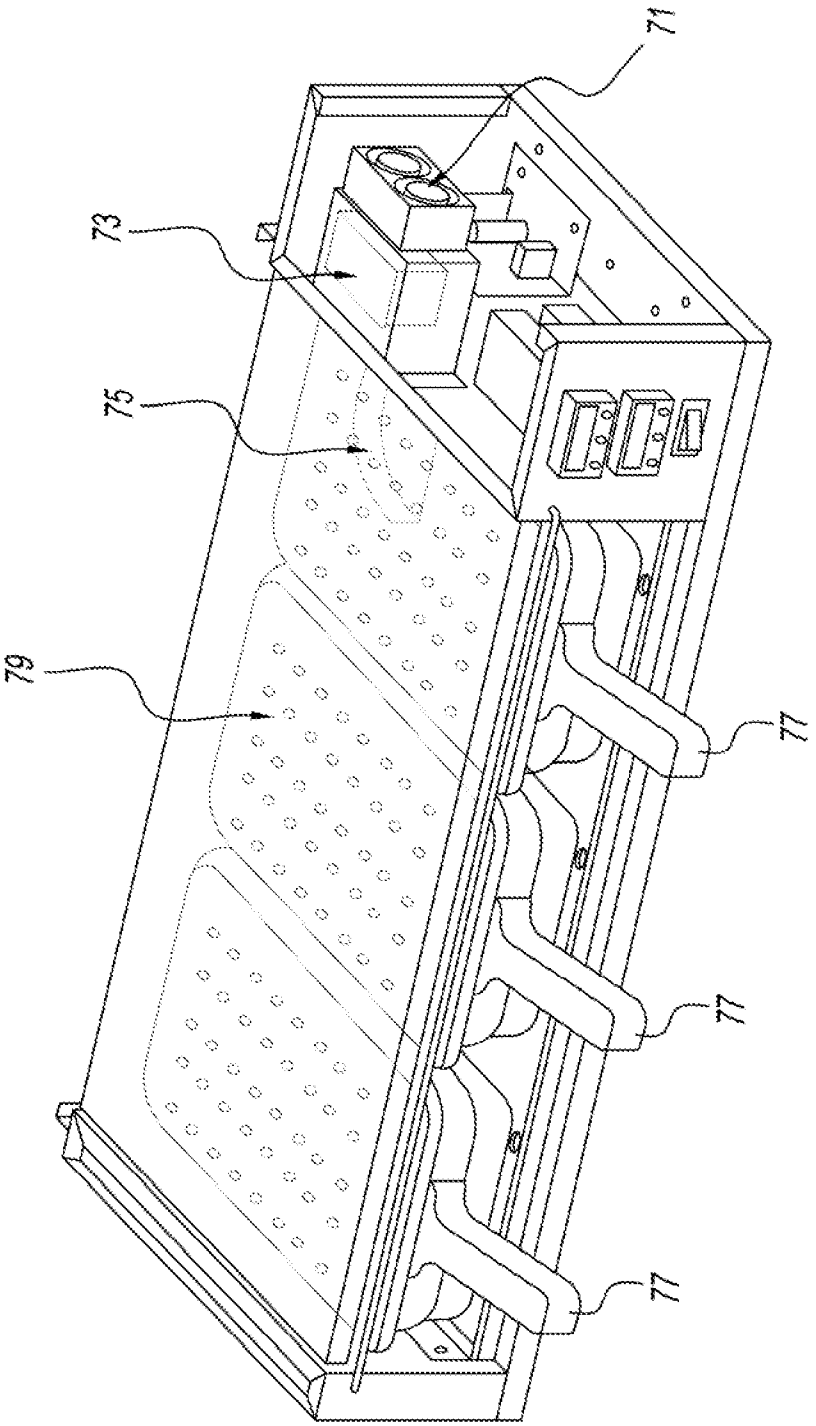

FIG. 10

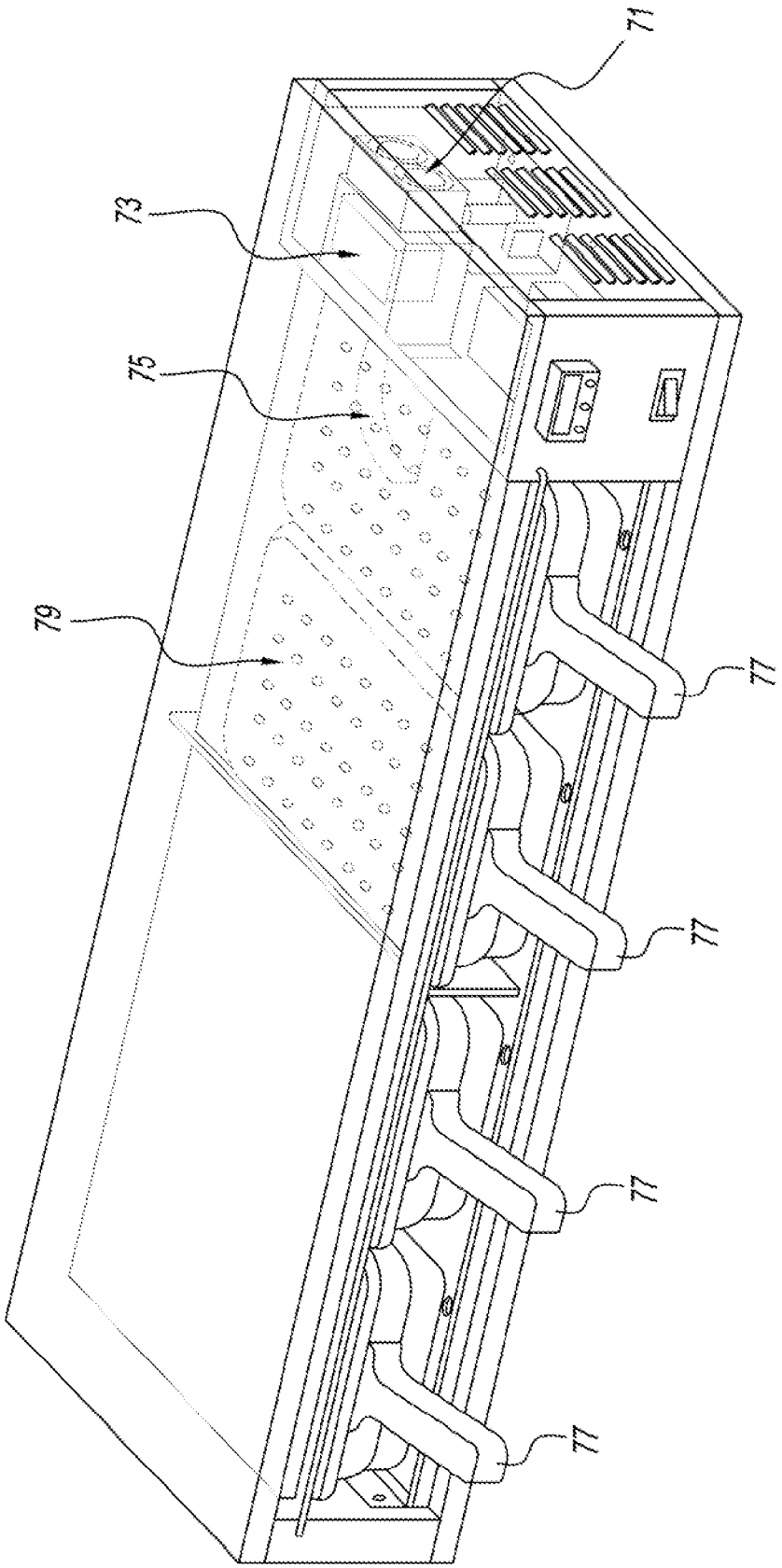

FIG. 11

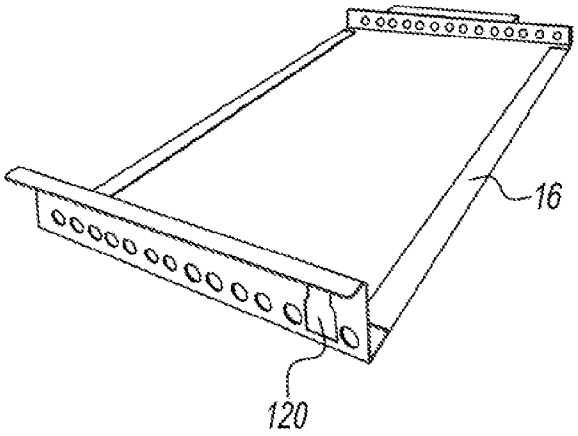

FIG. 12A

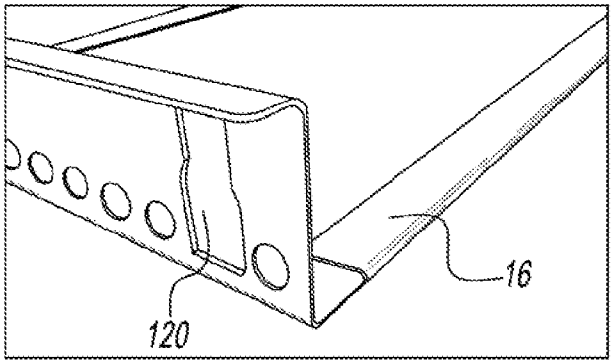

FIG. 12B

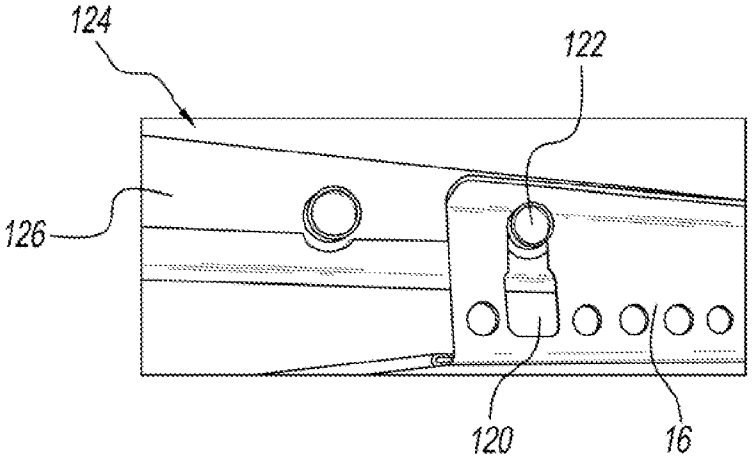

FIG. 12C

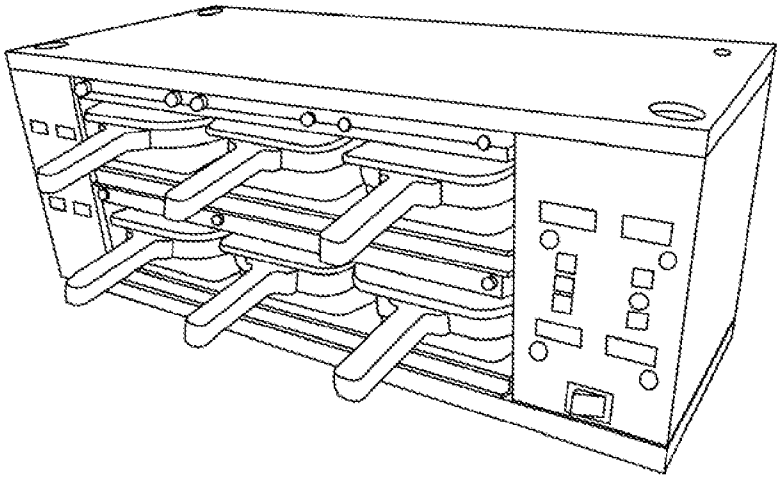

FIG. 13

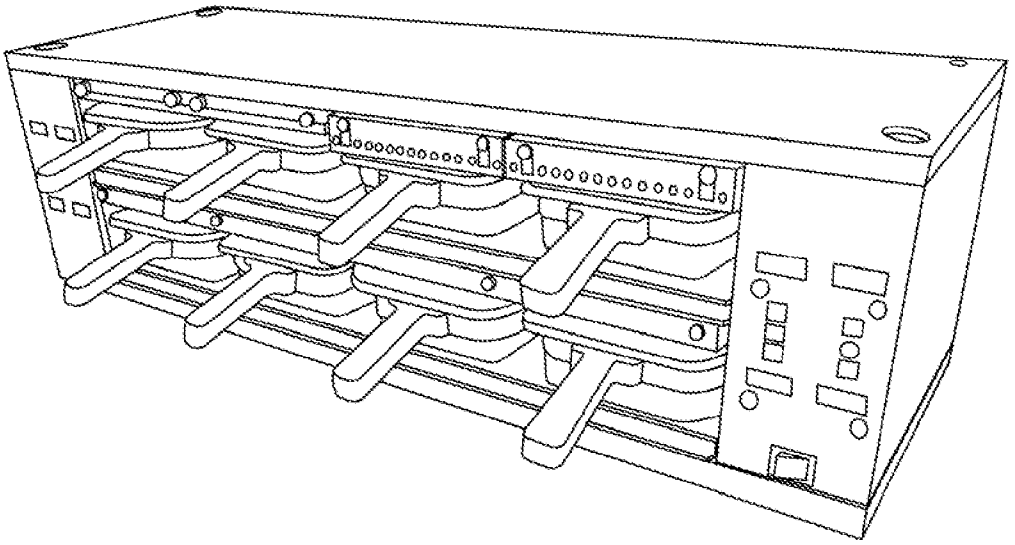

FIG. 14

MOIST AND CRISPY PRODUCT HOLDING CABINET WITH HEATED AIRFLOW

CROSS-REFERENCED APPLICATION

[0001] This application claims priority to U.S. Provisional Application No. 61/664,688, filed on Jun. 26, 2012, which is incorporated herein in its entirety by reference thereto.

BACKGROUND

[0002] 1. Field

[0003] The present disclosure relates to food holding cabinets for holding cooked or partially-cooked food in one or more food trays at an elevated temperature until the food is to be served. More particularly, the present disclosure relates to a holding cabinet which utilizes a unique and novel airflow system with or without a food tray cover to enhance moisture retention or enhance crispiness of the food being held in the holding tray, respectively.

[0004] 2. Discussion of the Background Art

[0005] Food holding cabinets, food trays and tray covers are well known, particularly in the fast food industry. The holding cabinets have heated chambers that hold multiple trays containing various food items at ready-to-serve temperatures for serving on an as needed basis. A widely used system employs a freestanding cover that is placed in the heating chamber of the cabinet and defines a receiving area for receiving a food tray. The food tray is placed in the receiving area until the tray is to be withdrawn from the chamber. The cabinet includes a wire rack for engaging the cover to prevent it from being withdrawn from the chamber along with the food tray. Although the wire rack serves its purpose, it interferes with cleaning the chamber. Also, there is heat loss through the space between the tray top edge and the freestanding cover.

[0006] One food holding cabinet is described in U.S. Pat. No. 7,385,160, which is incorporated herein by reference in its entirety. This food holding cabinet has a housing defining a heating chamber for holding a covered food tray in a tray location via a pair of elongated rigid rods mounted to the housing for suspending a food tray cover thereon in a position above the tray location. A front rod extends across the opening to the heating chamber and supports the front end of the tray cover and a rear rod supports the rear of the cover. When a food tray is inserted into the tray location, it lifts and supports the cover. When the tray is removed, the front rod prevents removal of the cover along with the underlying tray. The front rod is spring-loaded to be pulled away from the housing to facilitate removal of the cover.

[0007] This other food holding cabinets are disclosed in US Patent Publication Nos. 2011/0253703, 2011/0253698 and 2007/0144202, all of which are incorporated herein by reference in their entireties.

[0008] The present disclosure also provides many additional advantages, which shall become apparent as described below.

SUMMARY

[0009] A holding cabinet which utilizes a unique and novel airflow system with or without a food tray cover to enhance moisture retention or enhance crispiness of the food being held in the holding tray, respectively.

[0010] A food holding cabinet having at least one heating chamber for holding at least one food tray therein, the cabinet comprising: a housing that defines the heating chamber and a heating chamber opening for access to the heating chamber, wherein the heating chamber comprises an top portion, front portion, a rear portion, and at least one tray location for receiving a food tray; a jet plate including a plurality of apertures, the jet plate is disposed between the heating chamber and an upper plenum, wherein the upper plenum is formed between an upper surface of the jet plate and a lower surface of the top portion of the heating chamber; and a blower positioned to provide heated gas into the upper plenum, wherein the gas exits the upper plenum through the apertures into the heating chamber such that it is direct substantially toward the food tray.

[0011] In a moisture mode, the food holding cabinet further comprises a food tray cover disposed above the food tray, thereby retaining moisture in the food tray. Preferably, the food tray cover is disposed between an upper portion of the food tray and the jet plate, whereby the heated gas passes through the jet plate and contacts an upper surface of the food tray cover. The food tray cover comprises a flat plate in contact with the food tray and a perpendicularly upwardly facing front edge portion. The perpendicularly upwardly facing front edge portion comprises a plurality of venting apertures, whereby the heated gas which contacts the food tray cover exits the heating chamber. The food tray further comprises a perpendicularly outward facing lip portion, wherein the upwardly facing front edge portion is disposed between the flat plate and the outwardly facing lip portion.

[0012] In a crispy mode, the food tray comprises sidewalls and vents disposed in the sidewalls, thereby allowing the heated gas to contact the food, directly or indirectly, disposed in the food tray and thereby removing at least a portion of moisture from a surface of the food so as to maintain a crispy exterior of the food.

[0013] The blower preferably comprises a micro blower and heating element, wherein the heating element is disposed between the microblower and the jet plate.

[0014] A method for holding food in a food tray disposed in a heating chamber of a holding cabinet, the method comprising: placing the food tray with the food into the heating chamber, wherein the heating chamber comprises an top portion, front portion, a rear portion, and at least one tray location for receiving the food tray; and blowing heated gas via a blower through an upper plenum and a plurality of apertures disposed in a jet plate, wherein the jet plate is disposed between the heating chamber and the upper plenum and wherein the gas exits the upper plenum through the apertures into the heating chamber directed substantially toward the food tray.

[0015] The method according to the moisture mode, further comprises placing a food tray cover above the food tray, thereby retaining moisture in the food tray. The food tray cover is preferably disposed between an upper portion of the food tray and the jet plate, whereby the heated gas passes through the jet plate and contacts an upper surface of the food tray cover. The preferably the food tray cover comprises a flat plate in contact with the food tray and a perpendicularly upwardly facing front edge portion. The perpendicularly upwardly facing front edge portion comprises a plurality of venting apertures, whereby the heated gas which contacts the food tray cover exits the heating chamber. The food tray cover further comprises a perpendicularly outward facing lip por-

tion, wherein the upwardly facing front edge portion is disposed between the flat plate and the outwardly facing lip portion.

[0016] The method according to the crispy mode, involves contacting, directly or indirectly, the food disposed within the food tray with the heated gas, thereby removing at least a portion of moisture from a surface of the food so as to maintain a crispy exterior of the food.

[0017] Further objects, features and advantages of the present disclosure will be understood by reference to the following drawings and detailed description.

BRIEF DESCRIPTION OF THE DRAWINGS

[0018] FIG. **1** is a front right side perspective view of a first embodiment of the food holding cabinet according to the present disclosure with a single tray;

[0019] FIG. **1**A is a front right side perspective view of yet another embodiment of the food holding cabinet according to the present disclosure with two trays;

[0020] FIG. **1**B is a front right side perspective view of yet another embodiment of the food holding cabinet according to the present disclosure with four trays;

[0021] FIG. **2** is a view of FIG. **1**B with the top portion and the side wall removed so as to expose heated air/gas blower units, upper jet plate, and air baffle;

[0022] FIG. **2**A is an alternative embodiment wherein air baffle directs a portion of the heated air/gas to the front, while the remainder of the air/gas is directed across the jet plate;

[0023] FIG. **3** is a top front right side perspective view of FIG. **2** exposing the left tray with a tray cover in place which is set up for moisture holding; and the right tray has no cover, thereby allowing heated air flow to impinge upon and maintain a crispy food surface exterior;

[0024] FIG. **4** is a perspective view of a heated air blower unit comprising a micro blower and heating element;

[0025] FIG. **5** is a bottom front view of jet plates in the heating chambers according to FIG. **1**B;

[0026] FIG. **6** is a right side planar view of the controller and first and second heated air blower units according to FIG. **1**B;

[0027] FIGS. **7**A-D are a series of photographs showing the present invention and especially the perforated metal insert to allow airflow about the food product in the food holding tray;

[0028] FIG. **8**A is a schematic top, front, right side perspective view of the food holding cabinet according to the present disclosure with a removable jet plate partially removed therefrom;

[0029] FIG. **8**B is a schematic representation from a top, front, right side perspective view of the food holding cabinet according to the present disclosure with a removable jet plate in the fully installed position within the cabinet;

[0030] FIGS. **9**A-C are schematic representation from a top, front, right side perspective view of another embodiment of a tray holding method according to the present disclosure;

[0031] FIG. **10** is an alternative embodiment of the present disclosure, wherein a pair of microblowers and thermal system direct heated air/gas across three product trays;

[0032] FIG. **11** is yet another embodiment, wherein a pair of microblowers and thermal system direct heated air/gas across four product trays;

[0033] FIG. **12**A is an alternative embodiment showing a top, front right side perspective view of a tray cover with yet another tray holding method according to the present disclosure;

[0034] FIG. **12**B is an expanded view of the locking slot in the front of the tray cover used to hold in place the tray;

[0035] FIG. **12**C is a front planar view of the tray cover secured to the front of the holding cabinet using the locking slot and bolt according to the present disclosure;

[0036] FIG. **13** is a front right side perspective view of yet another embodiment of the food holding cabinet according to the present disclosure with eight trays; and

[0037] FIG. **14** is a front right side perspective view of yet another embodiment of the food holding cabinet according to the present disclosure with six trays.

DETAILED DESCRIPTION OF THE PREFERRED EMBODIMENT

[0038] Referring to FIGS. **1**, **1**A and **1**B, there is shown a food holding cabinet assembly, generally designated **10**, comprised of a food holding cabinet **12**, one or more food holding trays **14** and one or more tray covers **16**. Wherein the front edge of tray cover **16** include vent holes **16***a* to allow heated air to escape therefrom. Each food holding cabinet **12** (FIG. **1**), **12***a* (FIG. **1**A) and **12***b* (FIG. **1**B) is comprised of a housing **18** having top and bottom walls **20**, **22**, side walls **24** and **26**, and front and rear walls **28**, **30**. Housing **18** defines a heating chamber **31** and a heating chamber opening **33** for access to heating chamber **31**, the heating chamber being for holding a covered food tray therein. Heating chamber **31** includes a front portion FP, a rear portion RP and at least one tray location TL for receiving a food tray **14**. Each of FIGS. **1**, **1**A and **1**B shows an embodiment of the food holding cabinet of the disclosure. FIG. **1** showing a basic embodiment for holding a single food holding tray **14**, FIG. **1**A includes two food holding trays **14**, and FIG. **1**B is an embodiment with four food holding trays **14**, wherein the top and bottom left side trays include tray covers **16** with vent holes **16***a* for moisture retention and the top and bottom rights side trays do not include any tray covers to allow for crisping of the food product held therein.

[0039] In accordance with the disclosure, and preferably including all embodiments, food holding cabinet **12** is also comprised of a pair of rigid support structures **46** mounted to housing **13** for supporting and suspending a tray cover **16** in heating chamber **31** in a position or bin above the at least one tray location TL. Optionally, tray cover **16** can be omitted in the instance where food holding cabinet **12** is to be used for crisping of the food product rather than moisture retention. The pair of support structures **46** includes a front support structure **46**F (shown) positioned adjacent to and extending across the front of heating chamber opening **33**, and a rear support structure **46**R (not shown) to positioned adjacent to and that extends across and is mounted, preferably fixed, to the rear portion RP of housing **13** or of heating chamber **31**. Preferably, each of the support structures is an elongated rigid member, for example, a rod or a bar, desirably made of metal or plastic. Preferably, the rigid support structure(s) is or are releasable to facilitate removal of one or more suspended covers **16** from the rigid support(s). As will be explained and shown further, when a food tray **14** is inserted into the food tray location TL and under an optionally suspended tray cover **16**, food tray **14** will engage a bottom portion of tray cover **16** and lift it upwardly off of the pair of support structures **46** such that the tray cover **16** is supported by food tray **14**, and such that, as the underlying food tray **14** is removed from heating chamber **31**, the front support structure **46***f* engages and prevents tray cover **16** from being removed from heating

chamber **31** along with the food tray **14**, and the pair of support structures **46** resume support and suspension of tray cover **16**. In all embodiments of the disclosure, preferably, the pair of support members **46** are mounted to housing **13** at positions that will suspend a tray cover **16** thereon at a height that is slightly less than the height of the food tray **14** that is to be seated in the tray location. Optionally, one or both food trays **14** can have a tray cover **16**, or neither requires a tray cover **16** if the products therein are only to be crisping versus moisture retention which would then require the use of the tray cover **16**.

[0040] FIG. **1**A shows a second preferred embodiment of the disclosure. More particularly, FIG. **1**A shows a food holding cabinet **12***a* whose housing **13***a* defines a heating chamber **31***a* for holding a plurality of, here, two, covered food trays **14** at a plurality of food tray locations, a left bin or tray location LTL and a right bin or tray location RTL, the tray locations being side-by-side to one another and each for receiving a food tray **14**. The pair of support structures **46** (front one shown) are, and are positioned and function as described in connection with the pair of support structures **46** shown in food holding cabinet **13** of FIG. **1**. Tray cover **16** is optional depending upon the use thereof, as discussed above.

[0041] FIG. **1**B shows a third embodiment of the disclosure. FIG. **1**B shows a food holding cabinet **12***b* whose housing **13***b* defines a heating chamber **31***b* for holding a plurality of, here, four, food trays **14** at or in a plurality of four bins or food tray locations, wherein the top and bottom left side trays include tray covers **16** with vent holes **16***a* for moisture retention and the top and bottom right side trays do not include any tray covers to allow for crisping of the food product held therein. However, some, all or none of the food holding trays **14** require a tray cover **16** depending upon the needs of the restaurant. Heating chamber **31***b* includes two parts or compartments, an upper heating chamber or compartment (UC or UHC) and a lower heating chamber or compartment (LC or LHC), one being above the other and separated by a floor F, upper compartment (UC) including an upper left tray location (ULTF) and an upper right tray location (URTL), and lower compartment (LC) including a lower left tray location (LLTL) and an lower right tray location (LRTL), side-by-side to one another, each of the four tray locations being for receiving a respective food tray **14**. In the embodiment of FIG. **1**B, there are two pairs of support structures **46**, a first upper pair of support structures **46** mounted to housing **18***b* to be operative to suspend a food tray cover **16** above each respective upper left tray location (ULTL) and upper right food tray location (URTL), and a second lower pair of support structures **46** mounted to the housing to be operative to suspend a food tray cover above each respective lower left and lower right food tray locations, (LLTL) and (LRTL), respectively. Each pair of support structures **46** (front one shown) is positioned and functions, as described in connection with the pair of support structures **46** shown in food holding cabinet **13** of FIGS. **1** and **1**A. Thus, with respect to food holding cabinet **12***b* of FIG. **1**B, each pair **46** of the two pairs of upper and lower support structures includes a front support structure **46**F positioned adjacent to the front portion (FP) of the respective upper and lower compartments, and a rear support structure **46**R positioned adjacent to the rear portion (RP) of the respective upper and lower heating compartments UHC, LHC, here respectively designated (**32**) and (**34**), each of the respective upper and lower front support structures extending across and in front of the heating chamber opening **42**, **44** to the respective upper and lower compartments.

[0042] As shown in FIG. **1**B, holding cabinet **12** can be comprised of one or more heating chambers, here shown as upper and lower heating chambers or sections **32**, **34** that are vertically separated by an intermediate shelf **36**. For example, upper heating chamber **32** has an upper heated air chamber **38** disposed along the ceiling of that chamber, and a lower heated air chamber **39** disposed along the top of shelf **36**. Each heating chamber part or compartment includes two tray locations, a left tray location (LTL) and a right tray location (RTL). Upper heating chamber **32** portion has a front opening **42** and lower heating chamber **34** has a front opening **44**.

[0043] FIG. **2** is a view of FIG. **1**B with top portion **20** and side wall **26** removed so as to expose heated air blower units **50***a* and *b*, upper jet plate **52** and air baffle **54**. Heated air exits units **50***a* and *b* into their respective heated air chambers **38** and **30** such that heated air is substantially evenly distributed over the top of upper jet plate **52** (lower jet plate not shown) to allow for balanced air flow out of apertures **56** toward food trays **14** and/or tray covers **16**. When it is desirable to hold the food product in food tray **14** in a moisture condition, then a tray cover **16** will be deployed such that the air from heated air chamber **38** exits apertures **56** and contact tray cover **16** and then exits via vent holes **16***a*. However, if it is desirable to crisp the food product contained in food tray **14**, then no tray cover will be employed and the air from heated air chamber **38** will exit apertures **56** and contact, directly or indirectly, the food product.

[0044] FIG. **3** is a view of FIG. **2** exposing the left tray with a tray cover in place which is set up for moisture holding (i.e. the heated air flow reflects off the tray cover **16** and exits through vent holes **16***b* in the front flange of cover **16**); and the right tray has no cover, thereby allowing heated air flow to impinge upon and maintain a crispy food surface exterior.

[0045] FIG. **2**A is an alternative embodiment wherein air baffles **54***a* and **54***b* directs a portion of the heated air/gas to the front of the holding cabinet as shown by arrows **56***a* and **56***b*, while the remainder of the air/gas is directed across jet plate **52** as shown by arrow **55**. This unique baffle configuration results in a uniformly balanced airflow and air temperature in the food product trays.

[0046] FIG. **4** is a view of heated air blower unit **50***a* comprising a micro blower **58** and heating element **60**, wherein heating element **60** is disposed between blower **58** and jet plate **52**.

[0047] FIG. **5** is a bottom front view of jet plates in the heating chambers according to FIG. **1**B.

[0048] FIG. **6** is a right side planar view of the controller and first and second heated air blower units according to FIG. **1**B.

[0049] The holding cabinet according to the present disclosure adds heated airflow down from the upper platen to flow through the food in the trays. Moisture is removed from the food surface to maintain a crispy exterior when the tray cover is removed, while keeping the internal hot and moist. In the crispy mode, i.e. when no tray cover is employed, air flow passes over the food items in the food holding tray and exits through holes below added in the tray sidewalls (FIG. **7**B). See photographs in FIGS. **7**A-D. Alternatively, one may use trays in which the airflow passes over the food product and thereafter reflects off the bottom surface and exits around the perimeter of the tray.

[0050] FIG. **8**A depicts a removable jet plate **52***a* in a partially removed position with respect to housing **18***b*. FIG. **8**B depicts removable jet plate **52***a* in a fully engage position during operation of the holding cabinet.

[0051] FIGS. **9**A-C depict another embodiment according to the present disclosure, wherein FIG. **9**A shows tray cover **16** is a hold position, wherein slot **90** receives right angles support bracket **92**. FIG. **9**B shows how tray cover **16** is lifted upward, such that support bracket **92** is disengaged from slot **90**, wherein tray cover **16** is free to move downward toward the tray, not shown. FIG. **9**C shows tray cover moved outward toward the user.

[0052] FIG. **10** is an alternative embodiment of the present disclosure, wherein a pair of microblowers **71** direct air or gas across heating element **73** and into baffle **75** to direct the air/gas across three (3) food trays **77** via a single jet plate **79**.

[0053] FIG. **11** is yet another embodiment similar to FIG. **10**, but wherein there are four (4) food trays in series.

[0054] FIGS. **12**A-C is an alternative embodiment showing a top, front right side perspective view of a tray cover **16** having yet another tray holding method, i.e. a locking slot **120** and bolt **122**. FIG. **12**C shows tray cover **16** secured to the front **124** of holding cabinet **126** using locking slot **120** and bolt **122**.

[0055] FIG. **13** is a front right side perspective view of yet another embodiment of the food holding cabinet according to the present disclosure with eight trays; and FIG. **14** is a front right side perspective view of yet another embodiment of the food holding cabinet according to the present disclosure with six trays. However, this device can be designed to include any number and configuration of trays. In the embodiment of FIG. **13**, the micro blower and heating element in left and right side control bays. Each blower system provides heated airflow to two trays via an upper air plenum which is divided down the center (not shown). FIG. **14** includes two control bays with four micro blowers.

[0056] While we have shown and described several embodiments in accordance with our disclosure, it is to be clearly understood that the same may be susceptible to numerous changes apparent to one skilled in the art. Therefore, we do not wish to be limited to the details shown and described but intend to show all changes and modifications that come within the scope of the appended claims.

What is claimed is:

1. A food holding cabinet having at least one heating chamber for holding at least one food tray therein, said cabinet comprising:

a housing that defines the heating chamber and a heating chamber opening for access to the heating chamber, wherein said heating chamber comprises an top portion, front portion, a rear portion, and at least one tray location for receiving a food tray;

a jet plate including a plurality of apertures, said jet plate is disposed between said heating chamber and an upper plenum, wherein said upper plenum is formed between an upper surface of said jet plate and a lower surface of said top portion of said heating chamber; and

a blower positioned to provide heated gas into said upper plenum, wherein said gas exits said upper plenum through said apertures into said heating chamber such that it is direct substantially toward said food tray.

2. The food holding cabinet according to claim **1**, further comprising a food tray cover disposed above said food tray, thereby retaining moisture in said food tray.

3. The food holding cabinet according to claim **2**, wherein said food tray cover is disposed between an upper portion of said food tray and said jet plate, whereby said heated gas passes through said jet plate and contacts an upper surface of said food tray cover.

4. The food holding cabinet according to claim **3**, wherein said food tray cover comprises a flat plate in contact with said food tray and a perpendicularly upwardly facing front edge portion.

5. The food holding cabinet according to claim **4**, wherein said perpendicularly upwardly facing front edge portion comprises a plurality of venting apertures, whereby said heated gas which contacts said food tray cover exits said heating chamber.

6. The food holding cabinet according to claim **4**, further comprises a perpendicularly outward facing lip portion, wherein said upwardly facing front edge portion is disposed between said flat plate and said outwardly facing lip portion.

7. The food holding cabinet according to claim **1**, wherein said food tray comprises sidewalls and vents disposed in said sidewalls, thereby allowing said heated gas to contact said food, directly or indirectly, disposed in said food tray and thereby removing at least a portion of moisture from a surface of said food so as to maintain a crispy exterior of said food.

8. The food holding cabinet according to claim **1**, wherein said blower comprises a micro blower and heating element, wherein said heating element is disposed between said microblower and said jet plate.

9. A method for holding food in a food tray disposed in a heating chamber of a holding cabinet, said method comprising:

placing said food tray with said food into said heating chamber, wherein said heating chamber comprises an top portion, front portion, a rear portion, and at least one tray location for receiving said food tray; and

blowing heated gas via a blower through an upper plenum and a plurality of apertures disposed in a jet plate, wherein said jet plate is disposed between said heating chamber and said upper plenum and wherein said gas exits said upper plenum through said apertures into said heating chamber directed substantially toward said food tray.

10. The method according to claim **9**, further comprising placing a food tray cover above said food tray, thereby retaining moisture in said food tray.

11. The method according to claim **10**, wherein said food tray cover is disposed between an upper portion of said food tray and said jet plate, whereby said heated gas passes through said jet plate and contacts an upper surface of said food tray cover.

12. The method according to claim **11**, wherein said food tray cover comprises a flat plate in contact with said food tray and a perpendicularly upwardly facing front edge portion.

13. The method according to claim **12**, wherein said perpendicularly upwardly facing front edge portion comprises a plurality of venting apertures, whereby said heated gas which contacts said food tray cover exits said heating chamber.

14. The method according to claim **12**, further comprises a perpendicularly outward facing lip portion, wherein said upwardly facing front edge portion is disposed between said flat plate and said outwardly facing lip portion.

15. The food holding cabinet according to claim **9**, further comprising contacting, directly or indirectly, said food disposed within said food tray with said heated gas, thereby

removing at least a portion of moisture from a surface of said food so as to maintain a crispy exterior of said food.

16. The method according to claim **9**, wherein said blowing of said heated gas is conducted by a blower.

17. The method according to claim **16**, wherein said blower comprises a micro blower and heating element, wherein said heating element is disposed between said microblower and said jet plate.

* * * * *