US 20170047547A1

(19) United States

(12) Patent Application Publication

Son et al.

(10) Pub. No.: US 2017/0047547 A1

(43) Pub. Date: Feb. 16, 2017

(54) **FLEXIBLE DISPLAY DEVICE**

(71) Applicant: **LG Display Co., Ltd.**, Seoul (KR)

(72) Inventors: **HaeJoon Son**, Gyeonggi-do (KR); **SieHyug Choi**, Gyeonggi-do (KR); **JuhnSuk Yoo**, Seoul (KR); **MoonGoo Kim**, Gyeonggi-do (KR); **Jehong Park**, Seoul (KR); **Chiwoong Kim**, Gyeonggi-do (KR)

(73) Assignee: **LG Display Co., Ltd.**, Seoul (KR)

(21) Appl. No.: **15/235,818**

(22) Filed: **Aug. 12, 2016**

(30) **Foreign Application Priority Data**

Aug. 13, 2015 (KR) 10-2015-0114888

Publication Classification

(51) **Int. Cl.**

H01L 51/52 (2006.01)
H01L 27/32 (2006.01)
H01L 25/16 (2006.01)

(52) **U.S. Cl.**

CPC ***H01L 51/5253*** (2013.01); ***H01L 51/5281*** (2013.01); ***H01L 25/167*** (2013.01); ***H01L 27/3276*** (2013.01); *H01L 2251/5338* (2013.01)

(57) **ABSTRACT**

A flexible display device comprises a flexible substrate including a display area and a non-display area; a display layer in the display area on a first surface of the flexible substrate; a polarizing plate on the display layer; and a cover coat in the non-display area on the first surface of the flexible substrate, the cover coat including a first end portion overlapping with the polarizing plate. At least a portion of the non-display area of the flexible substrate and the cover coat are bendable in a bending direction.

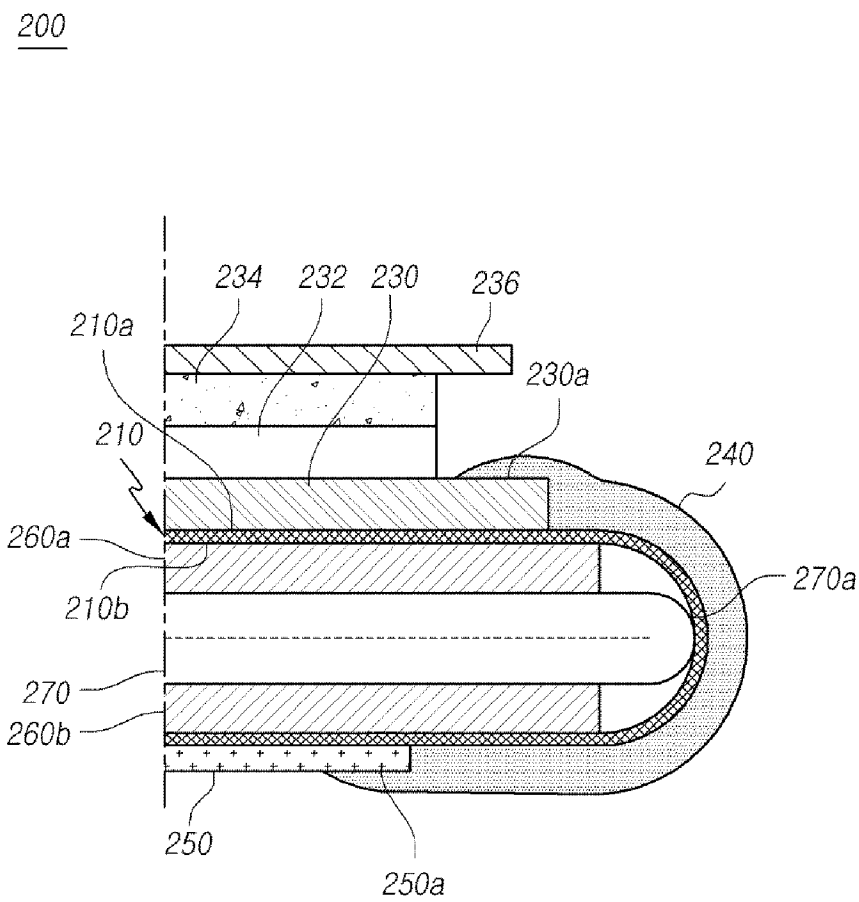

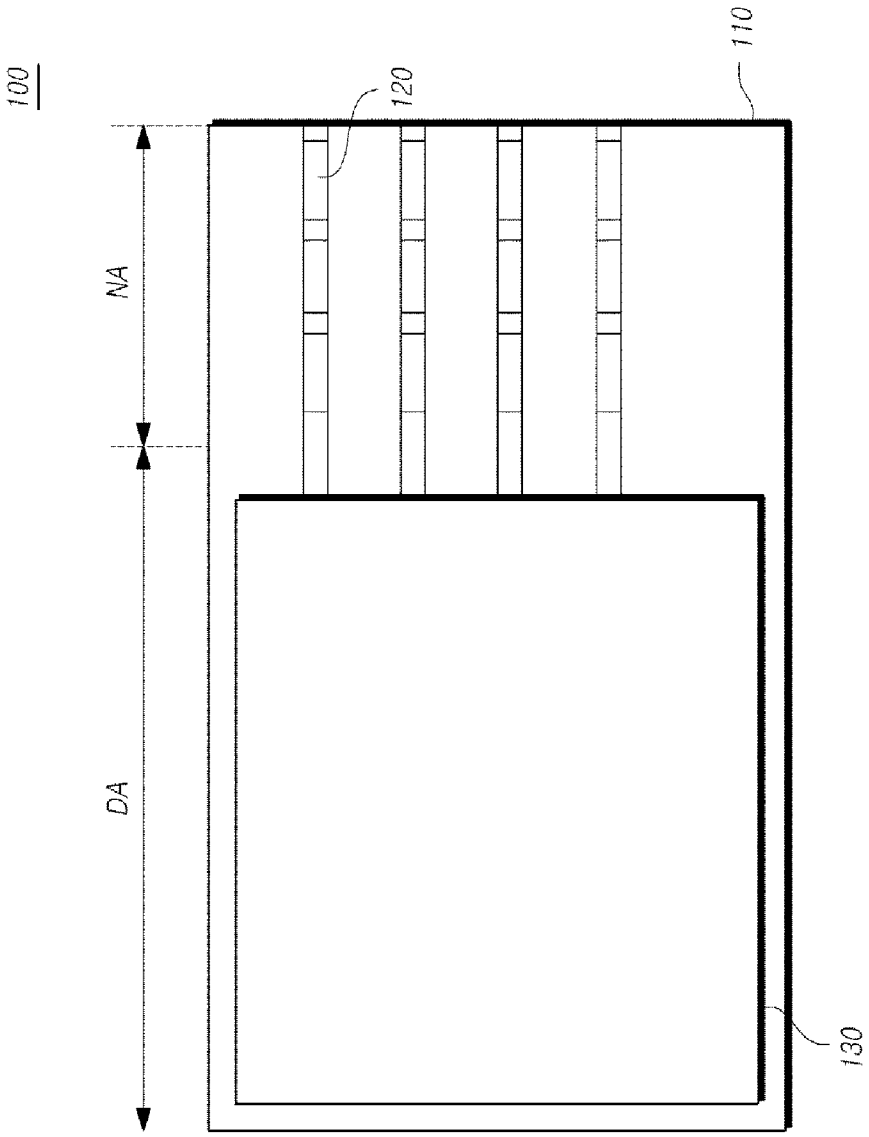

FIG. 1

FIG.2

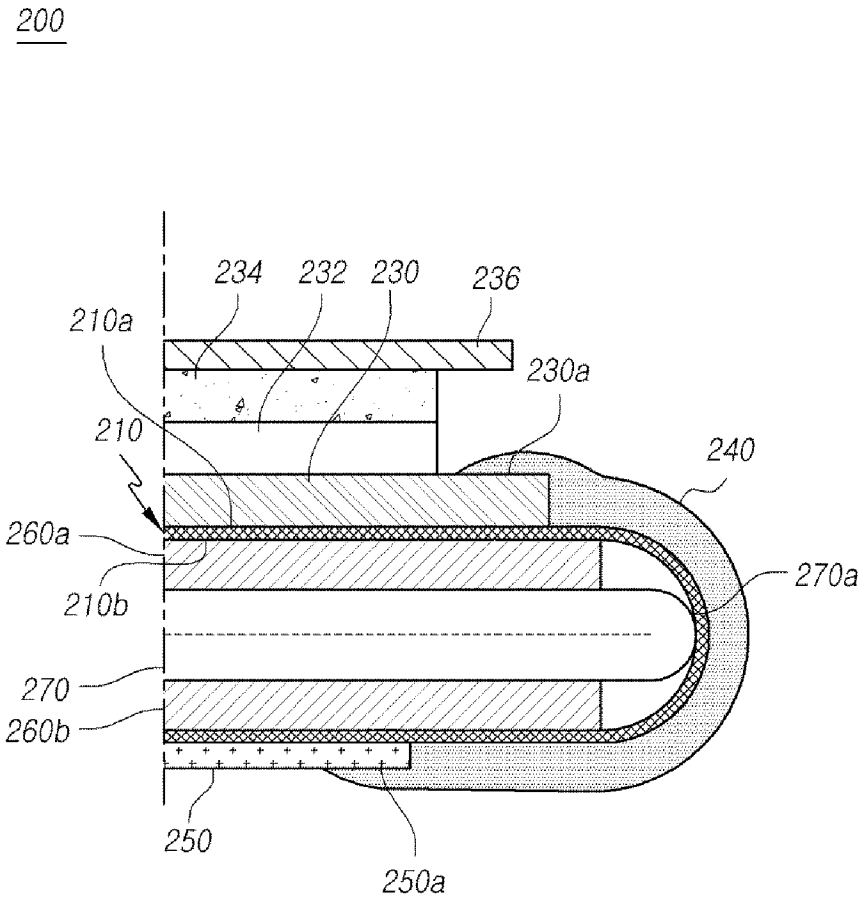
200
234
232
230
236
210a
230a
210
240
260a
270a
210b
270
260b
250
250a

FIG.3

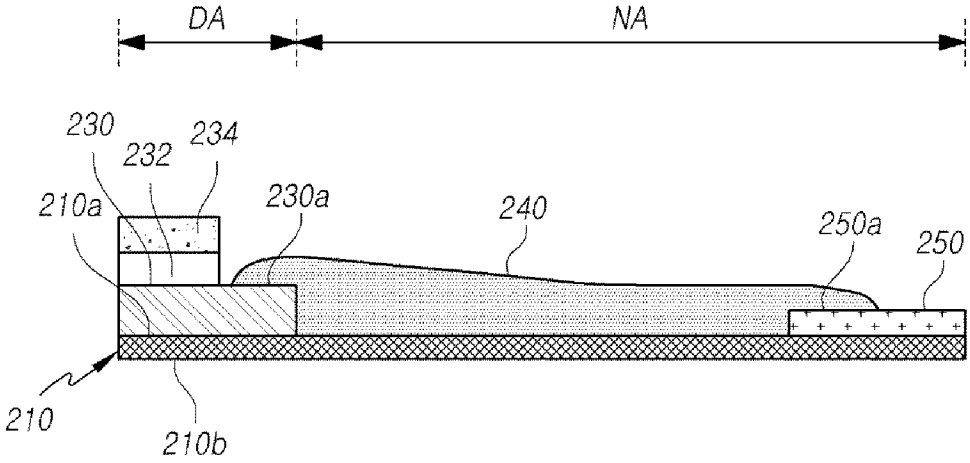

FIG.4A

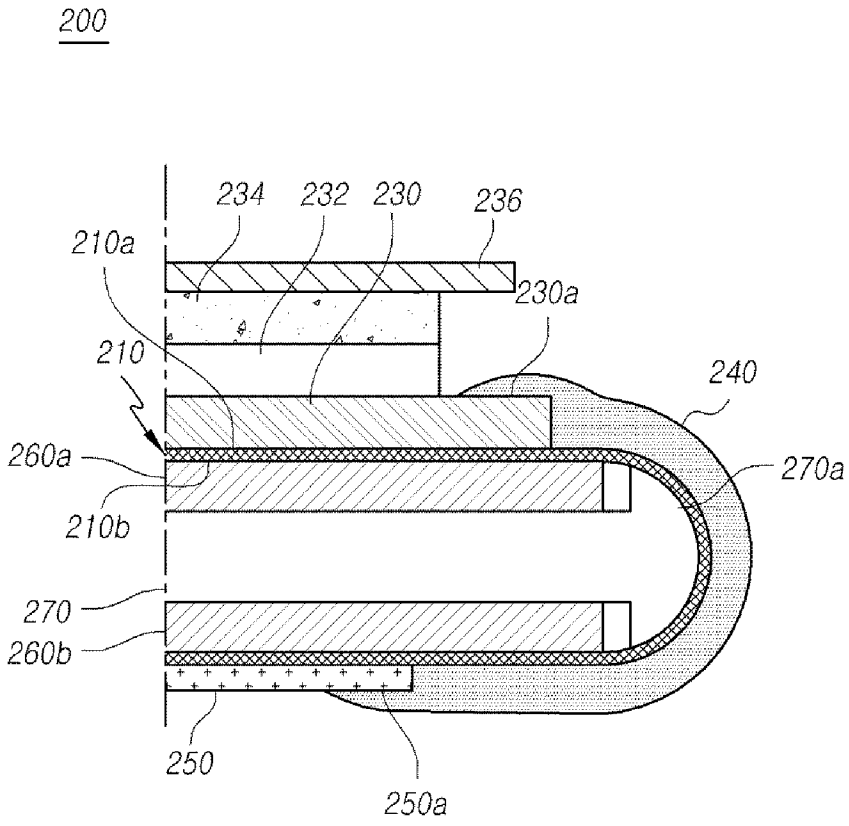
200
234
232
230
236
210a
230a
210
240
260a
270a
210b
270
260b
250
250a

FIG.4B

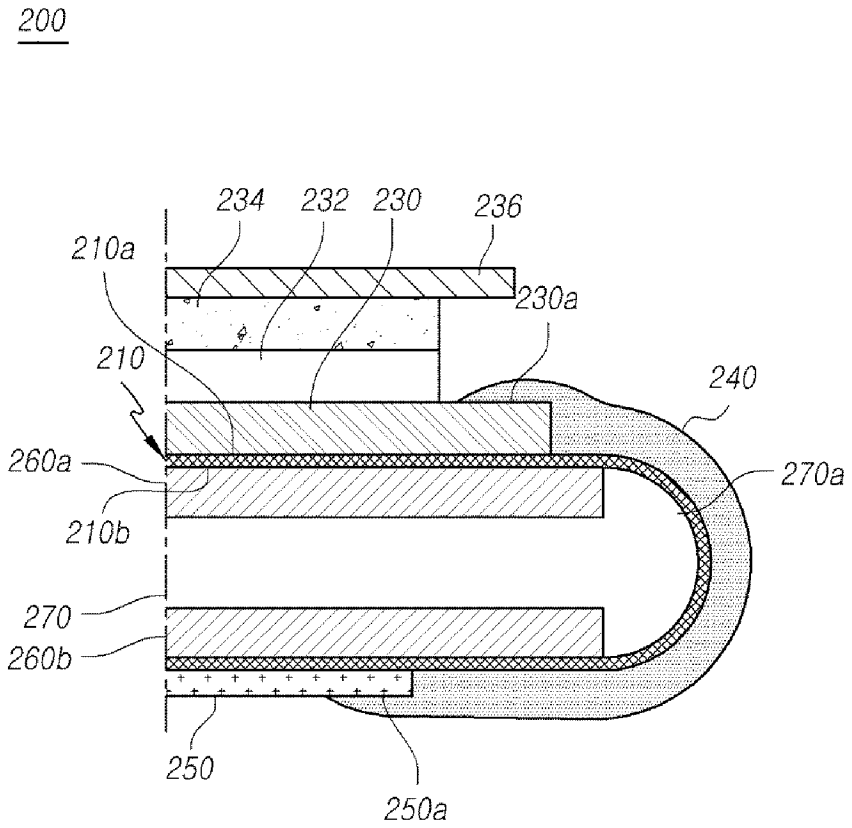
200
234
232
230
236
210a
230a
210
240
260a
270a
210b
270
260b
250
250a

FIG.4C

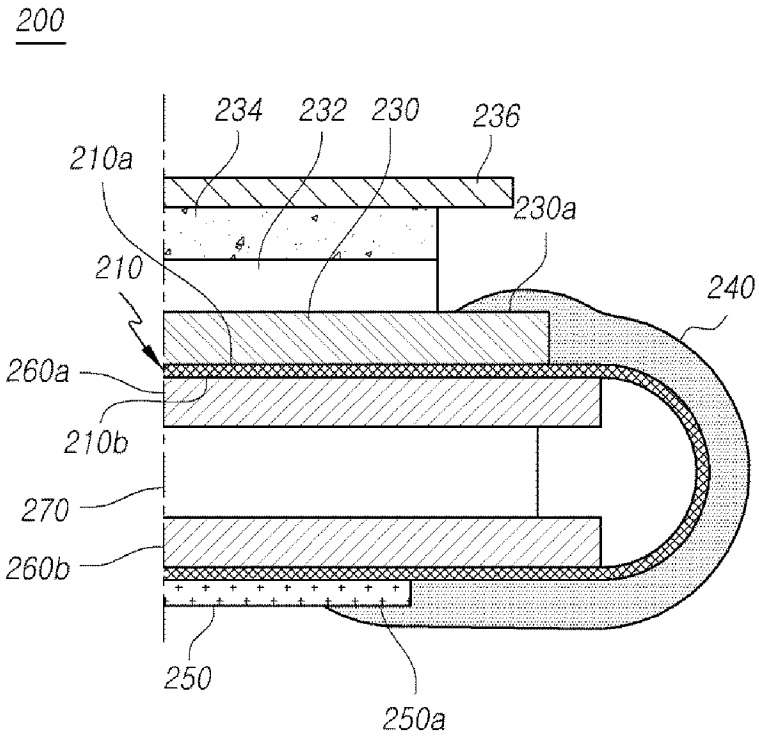
200
234
232
230
236
210a
230a
210
240
260a
210b
270
260b
250
250a

FIG.5

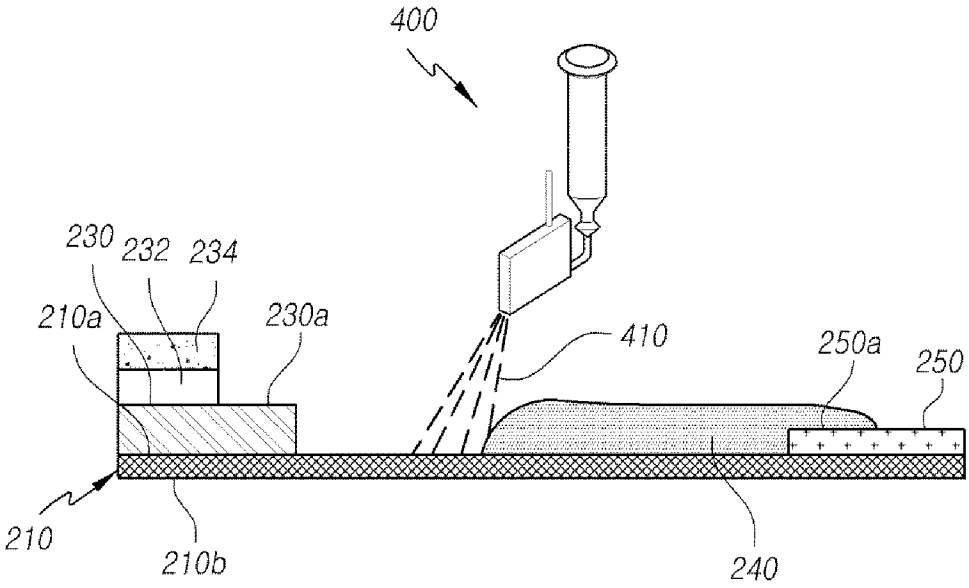

FIG.6A

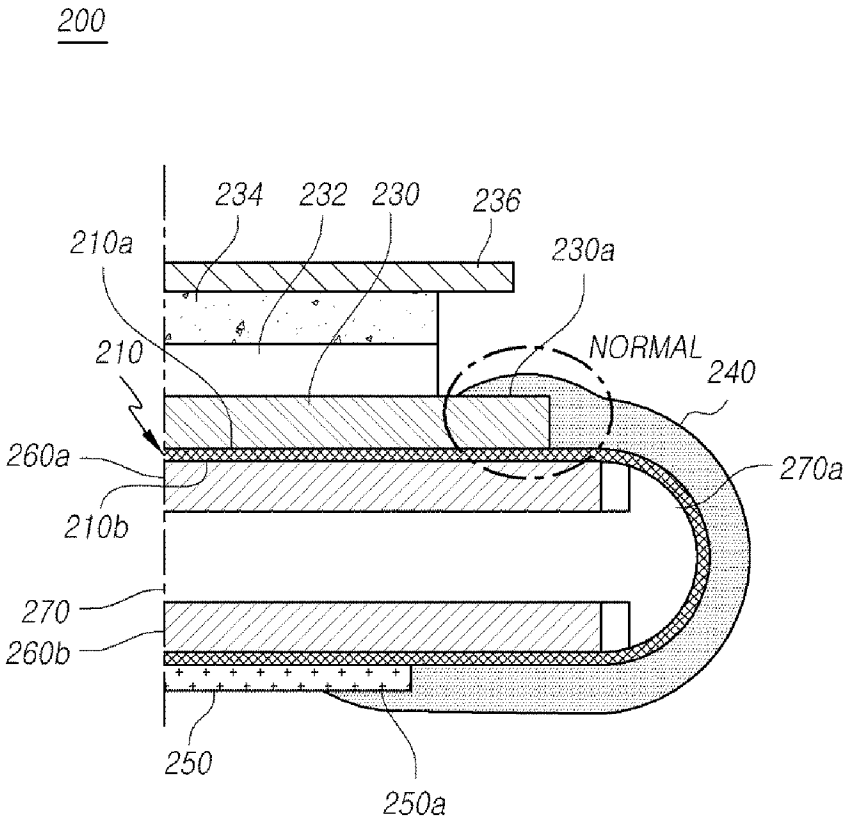
200
234
232
230
236
210a
230a
NORMAL
240
210
260a
270a
210b
270
260b
250
250a

FIG.6B

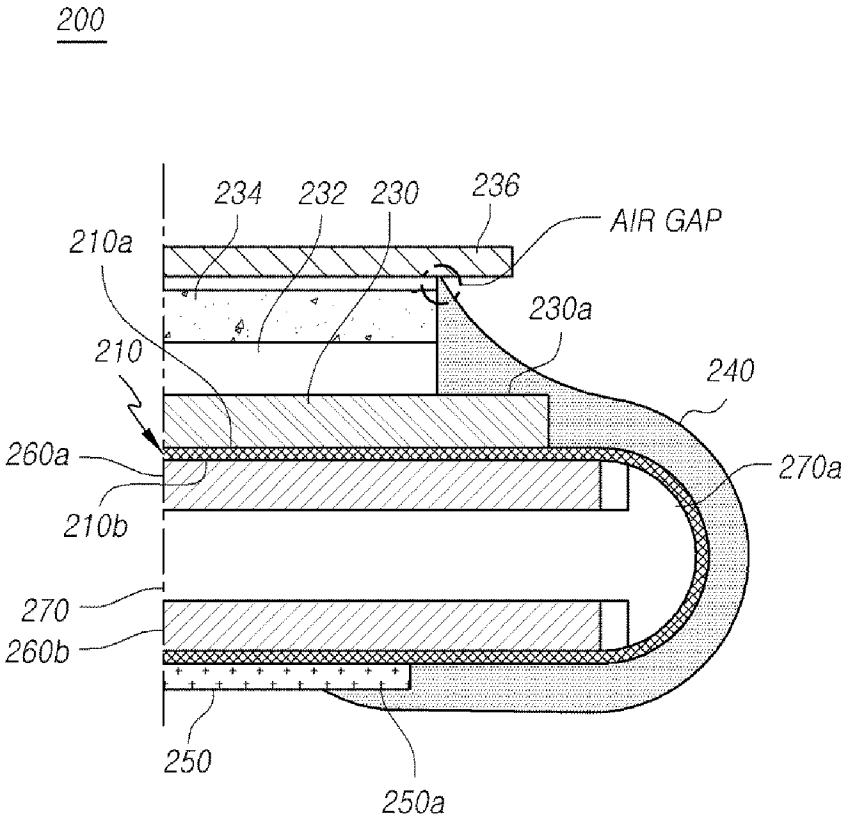
200
234
232
230
236
AIR GAP
210a
230a
210
240
260a
270a
210b
270
260b
250
250a

FIG. 7

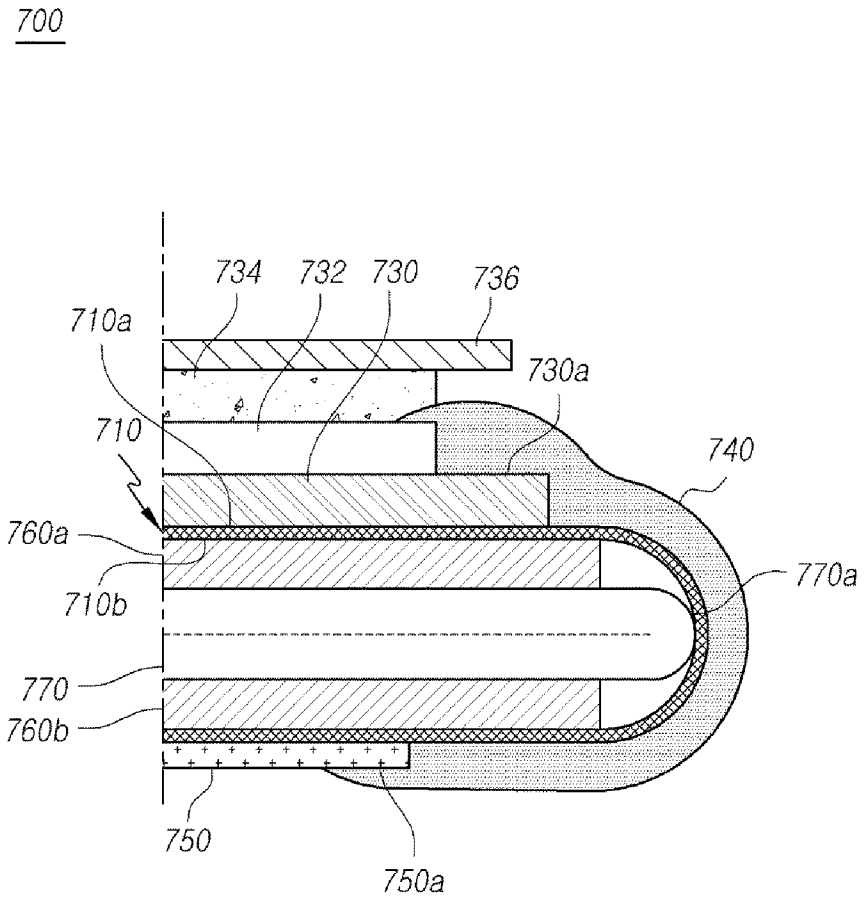
700
734
732
730
736
710a
730a
710
740
760a
770a
710b
770
760b
750
750a

FIG. 8A

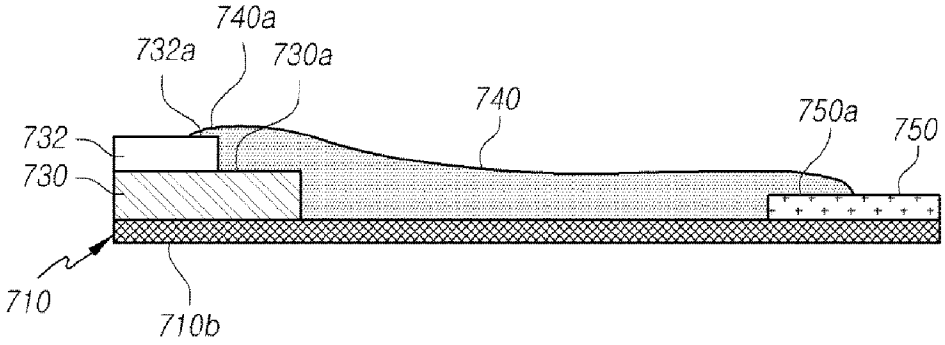

FIG. 8B

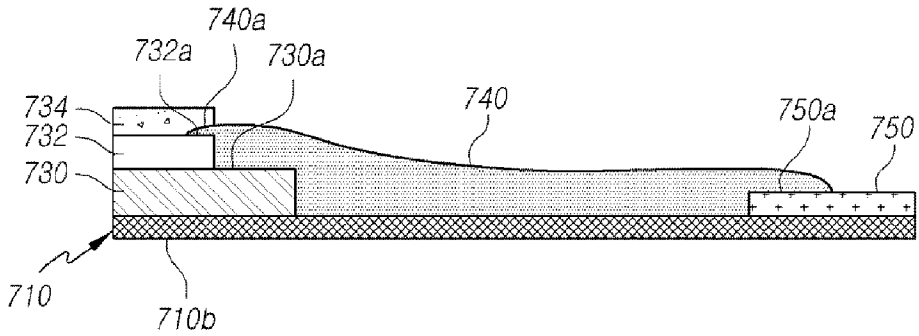

FIG. 8C

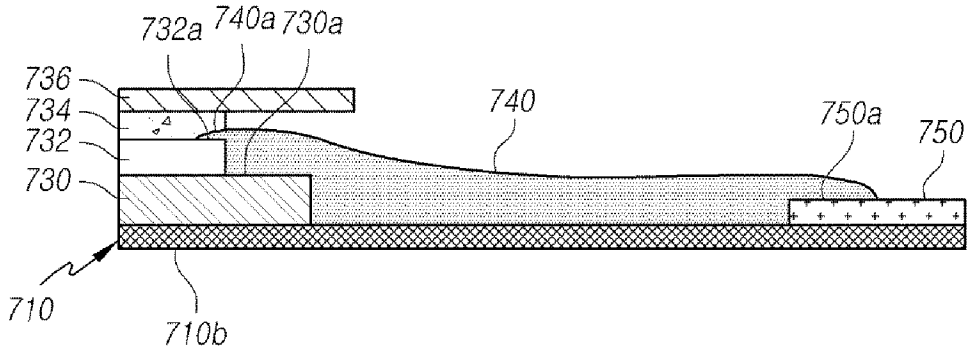

FIG.9

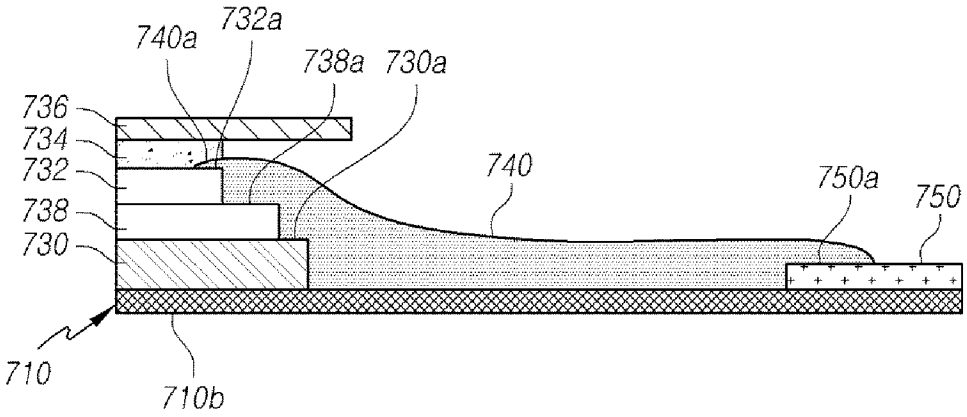

FIG. 10A

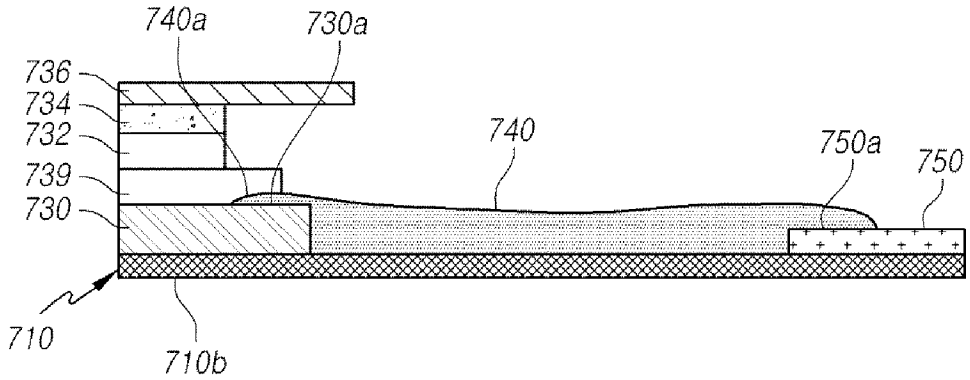

FIG. 10B

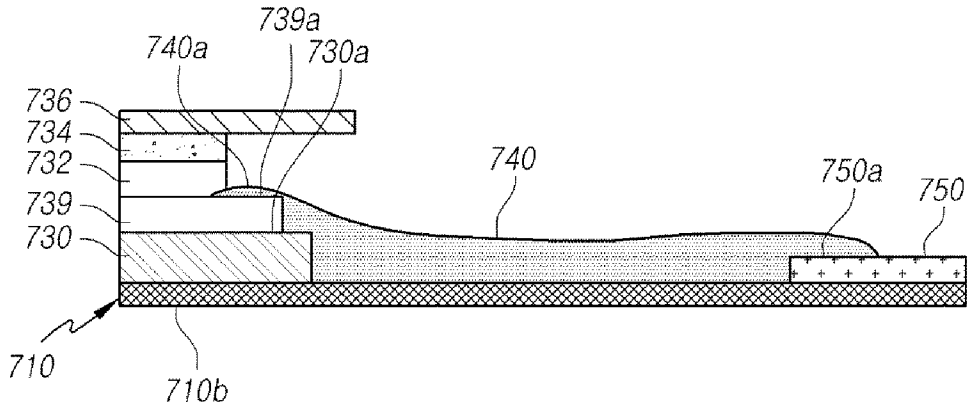

FIG. 11A

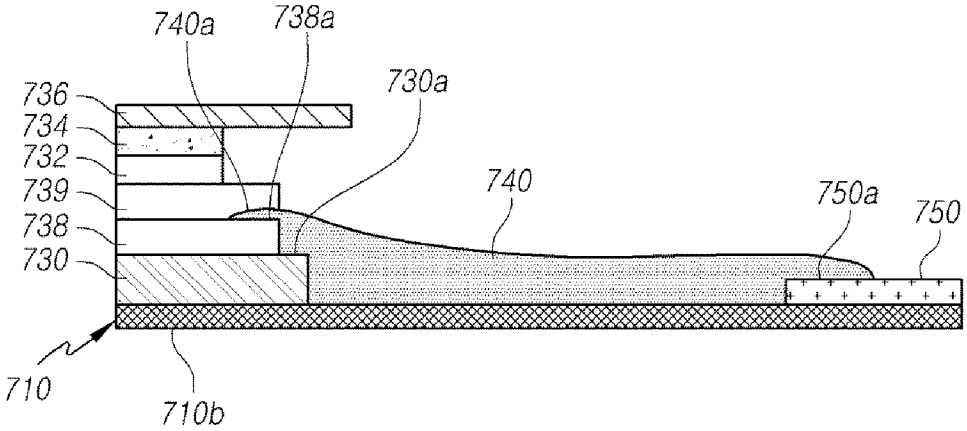

FIG. 11B

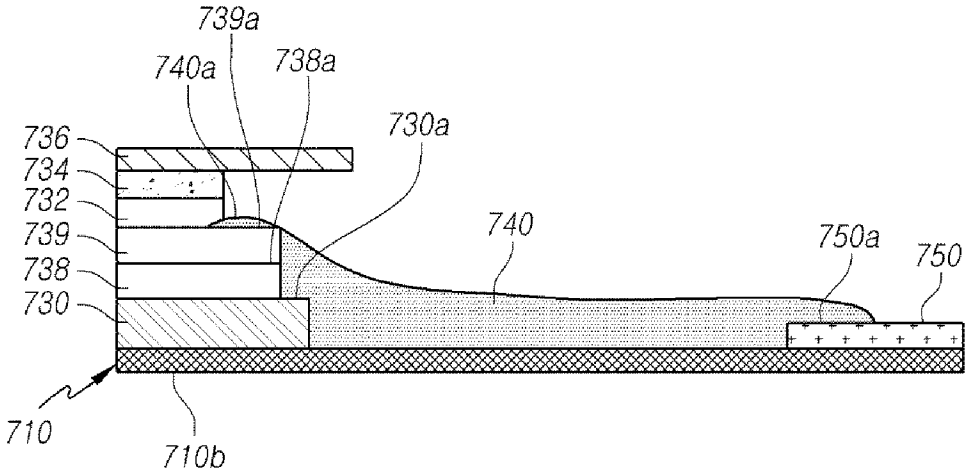
739a
740a
738a
730a
736
734
732
739
738
730
740
750a
750
710
710b

FLEXIBLE DISPLAY DEVICE

[0001] This application claims the benefit of Korean Patent Application No. 10-2015-0114888 filed on Aug. 13, 2015, the entire contents of which are incorporated herein by reference for all purposes as if fully set forth herein.

BACKGROUND OF THE INVENTION

[0002] Field of the Invention

[0003] The present disclosure relates to a flexible display device.

[0004] Description of the Related Art

[0005] Display devices have been used in, among others, computer monitors, televisions, and cellular phones. Such display device include an organic light emitting diodes (OLED) display device, a plasma display panel (PDP) display device, and others that emit light without a separate light source, and a liquid crystal display device and others that incorporate a separate light source.

[0006] Recently, a flexible display device has been receiving attention as a next generation display device. A flexible display may be manufactured by forming a display panel (or a display layer), wiring, and other elements on a flexible substrate, which is made of a flexible material, such as plastic, so that an image can be displayed under a bent condition like paper.

[0007] The flexible display device may have a variety of applications, not only in a computer monitor or a TV but also in a personal mobile device. Accordingly, a flexible display device having reduced volume and weight while exhibiting a wide display area has been studied.

[0008] In such a flexible display device, a crack may occur in the flexible substrate or the wiring due to various causes when the display device is bent. This crack in the flexible substrate or the wiring may cause a failure of the flexible display device.

SUMMARY OF THE INVENTION

[0009] Accordingly, the present invention is directed to a flexible display device that substantially obviates one or more of the problems due to limitations and disadvantages of the related art.

[0010] An object of the present invention is to provide a flexible display device capable of preventing or minimizing cracks in a flexible substrate or wiring when the flexible display device is bent. Another object of the present invention is to prevent or minimize a failure in a flexible display device.

[0011] Additional features and advantages of the invention will be set forth in the description which follows, and in part will be apparent from the description, or may be learned by practice of the invention. The objectives and other advantages of the invention will be realized and attained by the structure particularly pointed out in the written description and claims hereof as well as the appended drawings.

[0012] To achieve these and other advantages and in accordance with the purpose of the present invention, as embodied and broadly described, a flexible display device may include: a flexible substrate including a display area and a non-display area; a display layer in the display area on a first surface of the flexible substrate; a polarizing plate on the display layer; and a cover coat in the non-display area on the first surface of the flexible substrate, the cover coat including a first end portion overlapping with the polarizing plate, wherein at least a portion of the non-display area of the flexible substrate and the cover coat are bendable in a bending direction.

[0013] In another aspect, a flexible display device may include: a flexible substrate including a display area and a non-display area; a display layer in the display area on a first surface of the flexible substrate; at least one additional layer on the display layer; and a cover coat disposed in the non-display area on the first surface of the flexible substrate, the cover coat including an end portion overlapping with the one additional layer and disposed between the display layer and the one additional layer, wherein at least a portion of the non-display area of the flexible substrate and the cover coat are bendable in a bending direction.

[0014] In yet another aspect, a flexible display device may include: a flexible substrate including a display area and a non-display area; a display layer in the display area on a first surface of the flexible substrate; a bendable cover coat disposed in the non-display area on the first surface of the flexible substrate; a first back plate disposed in the display area on a second surface of the flexible substrate opposite the first surface; a second back plate disposed in the non-display area on the second surface of the flexible substrate; and a supporting member positioned between the first back plate and the second back plate when the flexible substrate is bent in the bending direction.

[0015] It is to be understood that both the foregoing general description and the following detailed description are exemplary and explanatory and are intended to provide further explanation of the invention as claimed.

BRIEF DESCRIPTION OF THE DRAWINGS

[0016] The accompanying drawings, which are included to provide a further understanding of the invention and are incorporated in and constitute a part of this specification, illustrate example embodiments of the invention and together with the description serve to explain the principles of the invention. In the drawings:

[0017] FIG. **1** is a plan view of an example flexible display device according to an example embodiment in a non-bent condition;

[0018] FIG. **2** is a cross section of an example flexible display device according to an example embodiment under a bent condition;

[0019] FIG. **3** is a cross section of a flexible substrate, a display layer, and a connection member of a drive integrated circuit of the flexible display device of FIG. **2** under a non-bent condition;

[0020] FIGS. **4**A to **4**C are cross-sections of modified examples of the flexible display device of FIG. **2**;

[0021] FIG. **5** is a diagram illustrating an example process of manufacturing a cover coat of FIG. **2**;

[0022] FIGS. **6**A and **6**B are diagrams respectively illustrating a case in which the cover coat is normally formed and a case in which the cover coat is abnormally formed based on a process error, when the cover coat is formed by using a jetting process of FIG. **5**;

[0023] FIG. **7** is a cross section of a flexible display device according to an embodiment of the present invention;

[0024] FIGS. **8**A to **8**C are cross sections of a flexible substrate, a display layer, and a drive integrated circuit connection member of the flexible display device of FIG. **7** under a non-bent condition; and

[0025] FIGS. **9**, **10**A, **10**B, **11**A, and **11**B are cross sections of modified examples of the flexible display device of FIG. **7**.

DETAILED DESCRIPTION OF EXAMPLE EMBODIMENTS

[0026] Reference will now be made in detail to embodiments of the present invention, examples of which are illustrated in the accompanying drawings. With respect to reference numerals for components throughout the drawings, like reference numerals may designate like components even though components are shown in different drawings. Further, in the description of example embodiments of the present invention, a detailed explanation of well-known components or functions may be omitted to avoid unnecessarily obscuring the subject matter of the present invention.

[0027] Further, in describing components of the present invention, terms such as first, second, A, B, (a), (b), and so on may be used. Unless otherwise specified, these terms are used only to differentiate the components from other components such that the nature, order, sequence, or number of the corresponding components is not limited by these terms. Also unless otherwise specified, it is to be understood that when one element is referred to as being "connected to" or "coupled to" another element, it may be directly connected to or directly coupled to another element, or indirectly connected to or coupled to another element though yet another element "intervening" therebetween, or "connected to" or "coupled to" another element via still another element.

[0028] In this specification, a flexible display device broadly refers to a display device with a flexible substrate, and broadly encompasses devices that may be referred to as a bendable display device, a rollable display device, an unbreakable display device, a foldable display device, and other similar devices. In this specification, a flexible OLED display device is an example of a flexible display device.

[0029] In this specification, the display device may have a display area and a non-display area. The display area is an area in which an image or the like is displayed, and the non-display area is an area, such as a bezel, in which an image is not displayed.

[0030] FIG. **1** is a plan view of a flexible display device according to an embodiment when the display device is not bent. As shown in FIG. **1**, a flexible display device **100** includes a flexible substrate **110**, wiring **120**, and a display layer or display panel **130**.

[0031] The flexible substrate **110** is a substrate that supports various elements of the flexible display device **100**, and has softness or flexibility. The flexible substrate **110** may be referred to as a soft substrate, a first soft substrate, or a flexible member. When being made of plastic, the flexible substrate **110** may be referred to as a plastic film, a plastic substrate, or a first soft substrate. The flexible substrate **110** may be formed in the shape of a rectangular parallelepiped, but is not limited thereto and can be formed in various shapes.

[0032] The flexible substrate **110** is made of soft material. For example, the flexible substrate **110** may be a film including one selected from a group of polyester-based polymer, silicone-based polymer, acrylic polymer, polyolefin-based polymer, and copolymer of them. Specifically, the flexible substrate **110** includes one selected from a group of polyethylene terephthalate (PET), polybutylene terephthalate (PBT), polysilane, polysiloxane, polysilazane, polycarbosilane, polyacrylate, polymethacrylate, polymethylacrylate, polymethylmetacrylate, polyethylacrylate, polyethylmetacrylate, cyclic olefin copolymer (COC), cyclic olefin polymer (COP), polyethylene (PE), polypropylene (PP), polyimide (PI) polymethylinethacrylate (PMMA), polystyrene (PS), polyacetal (POM), polyetheretherketone (PEEK), polyester sulfone (PES), polytetrafluoroethylene (PTFE), polyvinyl chloride (PVC), polycarbonate (PC), polyvinylidene fluoride (PVDF), perfluoroalkyl polymers (PFA) a styrene acrylic polymer nitro rilko (SAN), and a combination of them. In some example embodiments when the flexible display device **100** is implemented as a transparent flexible display device, the flexible substrate **110** is formed of a transparent soft material.

[0033] The flexible substrate **110** may include a display area (DA) and a non-display area (NA). The display area (DA) of the flexible substrate is an area in which a real image is displayed, and the non-display area (NA) of the flexible substrate **110** is an area in which an image is not displayed.

[0034] The non-display area (NA) of the flexible substrate **110** may be an area extending from the periphery of the display area (DA) of the flexible substrate **110**. The non-display area (NA) of the flexible substrate **110** may be an area extending from a side of the display area (DA) of the flexible substrate **110**. For example, when the display area (DA) of the flexible substrate **110** is formed in a polygonal shape, the non-display area (NA) of the flexible substrate **110** may extend from a side of the display area (DA) of the flexible substrate **110**. A non-display area (NA) of the flexible substrate **110** which extends from a side of the display area (DA) of the flexible substrate **110** is illustrated in FIG. **1** as an example for the convenience of description, but is not limited thereto. Therefore, the non-display area (NA) of the flexible substrate **110** may extend from a plurality of sides of the display area (DA) of the flexible substrate **110**.

[0035] As the non-display area (NA) of the flexible substrate **110** may be disposed in peripheral areas or edge areas of the display area (DA) of the flexible substrate **110**, and various circuits for displaying image may be arranged therein, the non-display area (NA) may be referred to as, among others, a peripheral area, a peripheral circuit area, an edge area, or a bezel area.

[0036] The display layer **130** may be disposed in the entire area or a portion area of the display area (DA) of the flexible substrate **110**. The display layer **130** is an element for displaying a real image and may be referred to as an image display layer. The display layer **130** described herein as an example is an organic light-emitting display layer that includes an organic light-emitting device to display an image via an organic light-emitting layer and a thin film transistor to drive the organic light-emitting device. However, the display layer **130** is not limited to such a specific example and broadly encompasses a display layer capable of displaying an image.

[0037] The thin film transistor of the display layer **130** may include, for example, an active layer, a gate insulating layer, a gate electrode, an intermediate insulating layer disposed on the gate electrode and the active layer, and a source electrode and a drain electrode electrically connected to the active layer. The organic light-emitting device may include a first electrode electrically connected to any one of the source electrode and the drain electrode, an organic

light-emitting layer disposed on the first electrode, and a second electrode disposed on the organic light-emitting layer.

[0038] Various elements not directly displaying an image may be disposed in the non-display area (NA) of the flexible substrate **110**. Examples of the elements disposed in the non-display area (NA) of the flexible substrate **110** include, among others, various drive integrated circuits, such as a gate drive integrated circuit (IC) and a data drive integrated circuit (IC), and a drive circuit section. Here, the various drive ICs and the drive circuit section may be mounted in the flexible substrate **110** in a Gate in Panel (GIP) format, or may be connected to the flexible substrate **110** in a Tape Carrier Package (TCP) or a Chip On Film (COF) format.

[0039] The wiring **120** may be disposed on the flexible substrate **110**. The wiring **120** may electrically connect the display layer **130** disposed in the display area (DA) of the flexible substrate **110** to the drive circuit section, or to the gate drive IC and the data drive IC disposed in the non-display area (NA) of the flexible substrate **110** for signal transmission.

[0040] The wiring **120** is formed of a conductive material, and is formed of a conductive material with excellent softness or flexibility in order to minimize the occurrence of a crack when the flexible substrate is bent. For example, the wiring **120** may be formed of a conductive material with excellent softness such as gold (Au), silver (Ag), aluminum (Al), and the like. However, components of the wiring **120** are not limited thereto, and the wiring **120** may be formed of one of various conductive materials used in manufacturing the display layer **130**, such as molybdenum (Mo), chrome (Cr), titanium (Ti), nickel (Ni), neodymium (Nd), copper (Cu), an alloy of silver (Ag) and magnesium (Mg), or other similar conductive materials used in manufacturing the display layer **130**. The wiring **120** may be formed in a multilayered structure including one or more of the various conductive materials described above. For example, the wiring **120** may be formed in a three-layered structure of titanium (Ti)/aluminum (Al)/titanium (Ti), but is not limited thereto.

[0041] At least a portion of the non-display area (NA) of the flexible substrate **110** may be formed in a shape that is bent in a bending direction. Here, at least the portion of the non-display area (NA) of the flexible substrate **110** having a shape that is bent in the bending direction is referred to as a bend area. As the non-display area (NA) of the flexible substrate **110** is not configured to display an image, the non-display area (NA) does not need to include display elements on the upper surface of the flexible substrate **110** and at least a portion of the non-display area (NA) may be bent. For the convenience of description, FIG. **1** illustrates an example in which the entire non-display area (NA) of the flexible substrate **110** is a bend area. However, the bend area is not limited thereto, and only a portion of the non-display area (NA) of the flexible substrate **110** may be the bend area. For the convenience of description, FIG. **1** illustrates an example in which the non-display area (NA) of the flexible substrate **110** is slightly narrower than the display area (DA) of the flexible substrate **110**, but the non-display area (NA) of the flexible substrate **110** may be significantly narrower than the display area (DA) of the flexible substrate **110**.

[0042] The bend area, which is at least a portion of the non-display area (NA) of the flexible substrate **110**, may be formed in a shape that is bent in the bending direction. In FIG. **1**, the bending direction is a lateral direction of the flexible substrate **110**. Thus, FIG. **1** illustrates an example in which the bend area is at least a portion of the non-display area (NA) of the flexible substrate **110** that is bent in the lateral direction of the flexible substrate **110**.

[0043] Hereinafter, various examples of flexible display devices under a bent condition will be described with reference to the accompanying drawings. FIG. **2** is a cross section of an example of a flexible display device under a bent condition. FIG. **3** is a cross section of a flexible substrate, a display layer, and a connection member of a drive integrated circuit of the flexible display device of FIG. **2** under a non-bent condition. As shown in FIGS. **2** and **3**, a flexible display device **200** may be bent in a shape in which at least a portion of a non-display area (NA) of a flexible substrate **210** is bent in a bending direction.

[0044] A display layer **230** is disposed on a display area (DA) of a first surface **210***a* of the flexible substrate **210**. A cover coat **240** may be disposed on the non-display area (NA) of the first surface **210***a* of the flexible substrate **210** to prevent moisture permeation or crack occurrence. The cover coat **240** may be disposed in the bend area described with reference to FIG. **1**.

[0045] A drive integrated circuit (IC) connection member **250** may be disposed on the non-display area (NA) of the first surface **210***a* of the flexible substrate **210**. Various drive integrated circuits, such as a gate or data drive IC, a drive circuit section, and the like, may be mounted on the drive IC connection member **250**. The drive IC connection member **250** may be at least one of the tape carrier package (TCP) and the chip on film (COF). The wiring **120** illustrated in FIG. **1** is disposed on the flexible substrate **210**, but is not shown in FIGS. **2** and **3** for the convenience of description.

[0046] The cover coat **240** is disposed between the display layer **230** and the drive IC connection member **250**, and may cover a portion **230***a* of the display layer **230** and a portion **250***a* of the drive IC connection member **250**.

[0047] A polarizing layer **232** may be disposed on the display layer **230**, but is not limited thereto. A over coat layer **236** may be disposed on the polarizing layer **232**, with an adhesive layer **234** bonding the polarizing layer **232** and the over coat layer **236** together.

[0048] At least a portion of the non-display area (NA) of the flexible substrate **210** and the cover coat **240** may be bent in the bending direction. On a second surface **210***b* of the flexible substrate **210** opposite the first surface **210***a*, a first back plate **260***a* and the second back plate **260***b* may be disposed. The first back plate **260***a* may be disposed to correspond to the display layer **230**. The second back plate **260***b* may be disposed to correspond to the drive IC connection member **250** and be positioned under the first back plate **260***a* when the flexible substrate **210** is bent in the bending direction.

[0049] A supporting member **270** may be positioned to be in contact with a bend area of the second surface **210***b* of the flexible substrate **210** between the first back plate **260***a* and the second back plate **260***b* in the vertical direction to support the flexible substrate **210**. A head **270***a* of the supporting member **270** may have a semicircular shape with a shorter radius than that of the bent flexible substrate **210**. Therefore, the head **270***a* of the supporting member **270** may be in surface to surface contact with the bend area of the second surface **210***b* of the flexible substrate **210**.

[0050] When the flexible substrate **210** is bent in the bending direction, tension is created in the flexible substrate **210**. In the flexible substrate **210**, the most powerful tension is created in the bending direction and may cause a crack in the flexible substrate **210** itself. Also, a crack may occur in the flexible substrate **210** due to an external impact. Further, the crack may propagate to the display layer **230**. Such a crack of the flexible substrate **210** may also cause breaking of the wiring (not shown) disposed in the non-display area (NA). The wiring (not shown) may be positioned in an intermediate surface by using the cover coat **240** so that a crack in the wiring can be prevented in a bent state of the flexible display.

[0051] In the flexible display device **200**, a bend of the display layer **230** may be needed to reduce the bezel area, and the cover coat **240** may be formed to prevent moisture permeation and cracks in the bend area. It is possible to prevent cracks by positioning the head **270***a* of the supporting member **270** to contact the bend area of the second surface **210***b* of the flexible substrate **210** to support the bend area.

[0052] As illustrated in FIGS. **4**A and **4**B, the head **270***a* of the supporting member **270** may be configured to be a semicircular shape having a radius substantially equal to the radius of the bend area of the flexible substrate **210** in the flexible display device **200** described above so as to position the head **270***a* of the supporting member **270** to be entirely in surface to surface contact with the second surface **210***b* of the flexible substrate **210** and to improve the stability and curvature reliability of the supporting member **270**. Therefore, it is possible to improve the effectiveness of the supporting member **270** in preventing wiring cracks in the entire bend area of the second surface **210***b* of the flexible substrate **210**.

[0053] As illustrated in FIG. **4**C, the supporting member **270** may not include the head **270***a* in surface to surface contact with the bend area of the second surface **210***b* of the flexible substrate **210**. This example configuration may reduce or prevent wiring cracks that may be caused by an impact on the flexible substrate **210** by the supporting member **270**.

[0054] The cover coat **240** may be formed by using various materials through various processes. For example, as illustrate in FIG. **5**, the cover coat **240** may be formed by coating organic resin (for example, acrylic resin) through a jetting process. The display layer **230** and the wiring (not shown) are formed in the display area (DA) and the non-display area (NA) of the flexible substrate **210**, respectively. Then, the drive IC connection member **250** with one or more drive ICs may be disposed on the flexible substrate **210** and connected to the wiring. The cover coat **240** may be formed by coating the organic resin **410** over the flexible substrate **210** between an end **230***a* of the display layer **230** and an end **250***a* of the drive IC connection member **250** using a jetting apparatus **400**, and performing a hardening process by using ultraviolet (UV) or the like.

[0055] FIGS. **6**A and **6**B respectively illustrate an example in which the cover coat **240** is normally formed and an example in which the cover coat **240** is abnormally formed based on a process error, when the cover coat **240** is formed with the jetting process of FIG. **5**.

[0056] As illustrated in FIG. **6**A, when the cover coat **240** is formed through the jetting process, as described above, the organic resin **410** for the cover coat **240** is to be coated on the end **230***a* of the display layer **230**, and is not to be coated on the polarizing layer **232** on the display layer **230** or on the adhesive layer **234** for bonding the polarizing layer **232** and the over coat layer **236** together. As illustrated in FIG. **6**B, due to a process error of the jetting process, the organic resin **410** may be coated on the polarizing layer **232** on the display layer **230** or the adhesive layer **234** for bonding the polarizing layer **232** and the over coat layer **236** together. If the organic resin **410** is coated on the adhesive layer **234** for bonding the polarizing layer **232** and the over coat layer **236** together due to the process error and is hardened, an air gap may occur between the adhesive layer **234** and the over coat layer **236** when bonding the over coat layer **236** with the polarizing layer **232** with the adhesive layer **234** due to a portion of the cover coat **240** protruding over the adhesive layer **234**. Bubbles may occur between the adhesive layer **234** and the over coat **236** layer, potentially causing adhesion failure of the over coat layer **236** or panel failure.

[0057] Hereinafter, example embodiments of a flexible display device capable of preventing or mitigating adhesion failure of an over coat layer or panel failure, even when a cover coat is formed over a flexible substrate with the jetting process, will be described with reference to the accompanying drawings.

[0058] FIG. **7** is a cross section of the flexible display device in a bent state according to an example embodiment of the present invention. FIG. **8**C is a cross section of a flexible substrate, a display layer, and a drive IC connection member of the flexible display device of FIG. **7** under a non-bent condition. As shown in FIGS. **7** and **8**A to **8**C, a flexible display device **700** according to the example embodiment may include a flexible substrate **710** having a display area (DA) and a non-display area (NA) extending from the display area (DA), a display layer **730** disposed in the display area (DA) on a first surface **710***a* of the flexible substrate **710**, a polarizing layer **732** disposed on the display layer **730**, and a cover coat **740** disposed in the non-display area (NA) on the first substrate **710***a* of the flexible substrate **710**.

[0059] The flexible display device **700** may include a first back plate **760***a* that is disposed on a second surface **710***b* of the flexible substrate **710** to correspond to the display layer **730**, and a second back plate **760***b* that is disposed on the second surface **710***b* of the flexible substrate **710** opposite the first surface **710***a* and separated from the first back plate **760***a*.

[0060] The flexible display device **700** may include a supporting member **770** positioned between the first back plate **760***a* and the second back plate **760***b* in the vertical direction, and separated from the flexible substrate **710** in the vertical direction. As illustrated in FIG. **7**, the head **770***a* of the supporting member **770** in a bent state may have a semicircular shape with a radius smaller than a radius of the flexible substrate **710** in a bent state, and be in contact with the second surface **710***b* of the flexible substrate **710**, similar to the example shown in FIG. **2**. Alternatively, the head **770***a* of the supporting member **770** may have a semicircular shape with a substantially same radius as the radius of the bent flexible substrate **710** so as to be substantially entirely in surface to surface contact with a bend area of the second surface **710***b* of the flexible substrate **710**, similar to the examples shown in FIGS. **4**A and **4**B. Such alternative configurations may improve stability and curvature reliabil-

ity of the supporting member **770**. Here, the supporting member **770** may have a similar configuration as any one of the example supporting members **270** shown in FIGS. **2** and **4**A to **4**C, including the example of FIG. **4**C in which the supporting member **770** does not have the head **770***a*.

[0061] As illustrated in FIG. **1**, wiring may be disposed on the flexible substrate **710**. The wiring may electrically connect the display layer **730** disposed in the display area (DA) of the flexible substrate **710** to the drive circuit section, or to the gate drive IC and the data drive IC disposed in the non-display area (NA) of the flexible substrate **710** for signal transmission. The wiring is formed of a conductive material, and may be formed of a conductive material with excellent softness or flexibility in order to minimize cracks when the flexible substrate **710** is bent.

[0062] A drive IC connection member **750** may be connected to the wiring in the non-display area (NA) of the flexible substrate **710**, and the cover coat **740** may be disposed over the flexible substrate **710** between the display layer **730** and the drive IC connection member **750**. As illustrated in FIG. **7**, the cover coat **740** may be positioned between the display layer **730** and the drive integrated circuit connection member **750**. As described above, the drive IC connection member **750** may be one of the tape carrier package (TCP) or the chip on film (COF).

[0063] At least a portion of the non-display area (NA) of the flexible substrate **710** may be positioned to have a shape that is bent in a bending direction. The flexible display device **700** may include the cover coat **740** that is disposed in the non-display area (NA) on a first surface **710***a* of the flexible substrate **710** and positioned to have a shape bent in the bending direction. The cover coat **740** may also be positioned to have a shape bent in the bending direction similarly to the bent portion of the non-display area (NA) of the flexible substrate **710**.

[0064] An intermediate surface may be disposed between the portion of the non-display area (NA) of the flexible substrate **710** positioned to have a shape that is bent in a bending direction and the cover coat **740**. Specifically, the wiring positioned in the non-display area (NA) of the flexible substrate **710** may form the intermediate surface as a dint in the flexible substrate **710** or the cover coat **740**. When the portion of the non-display area (NA) of the flexible substrate **710** and the cover coat **740** are bent in the bending direction, a position at which strains on the portion of the non-display area (NA) of the flexible substrate **710** and the cover coat **740** caused by the bending become zero or near zero may be referred to as the intermediate surface.

[0065] A polarizing layer **732**, an over coat layer **736**, and a first adhesive layer **734** for bonding the polarizing layer **732** and the over coat layer **736** together may be disposed on the display layer **730**. As illustrated in FIG. **8**A, in a manufacturing stage in which the display layer **730** and the polarizing layer **732** are disposed in the display area (DA) of the flexible substrate **710** and the drive IC connection member **750** is disposed in the non-display area (NA) of the flexible substrate **710**, an organic resin may be coated over the flexible substrate **710**, from an end **750***a* of the drive IC connection member **750** in the non-display area (NA) of the flexible substrate **710** to an end **730** of the display layer **730** and an end **732***a* of the polarizing layer **732** in the display area (DA) of the flexible substrate **710**, with the jetting process of FIG. **5**. Then, the organic resin may be hardened to form the cover coat **740**.

[0066] Next, as illustrated in FIGS. **8**B and **8**C, an end **740***a* of the cover coat **740** may be disposed on the end **730***a* of the display layer **730** and the end **732***a* of the polarizing layer **732**. The first adhesive layer **734** may be disposed on the polarizing layer and the end **740***a* of the cover coat **740**. Then, the over coat layer **736** may be disposed on the first adhesive layer **734** to be bonded to the polarizing layer **732** via the first adhesive layer **734**. Next, a support structure of the first back plate **760***a*, the second back plate **760***b*, and the supporting member **770** may be disposed on the second surface **710***b* of the flexible substrate **710**. Then, a bend area of the flexible substrate **710** may be bent so that the flexible display device **700** in a bent state as illustrated in FIG. **7** may be obtained.

[0067] In the flexible display device **700** illustrated in FIG. **8**A, for example, the cover coat **740** may be formed with the jetting process before bonding the first adhesive layer **734** to the polarizing layer **732**. Thus, if the organic resin **410** is coated over the polarizing layer **732** due to a process error, the end **740***a* of the cover coat **740** would be positioned between the polarizing layer **732** and the first adhesive layer **734** on the polarizing layer **732**. As a result, an air gap does not occur between the first adhesive layer **734** and the over coat layer **736**. Thus, it is possible to minimize or prevent adhesion failure of the over coat layer **736** or panel failure caused by the air gap occurring between the first adhesive layer **734** and the over coat layer **736**.

[0068] As illustrated in FIG. **9**, the flexible display device **700** may further include a barrier layer **738** between the display layer **730** and the polarizing layer **732**. If the flexible display device **700** includes the barrier layer **738**, the end **740***a* of the cover coat **740** may be positioned between the polarizing layer **732** and the first adhesive layer **734** on the barrier layer **738** and the polarizing layer **732**. Specifically, the end **740***a* of the cover coat **740** may be positioned on the end **732***a* of the polarizing layer **732** between the polarizing layer **732** and the first adhesive layer **734**, and on an end **738***a* of the barrier layer **738**.

[0069] As illustrated in FIGS. **10**A, **10**B, **11**A, and **11**B, the flexible display device **700** may include a second adhesive layer **739** between the polarizing layer **732** and the display layer **730** in place of or in addition to the barrier layer **738**. The flexible display device **700** may include the second adhesive layer **739** between the polarizing layer **732** and the display layer **730** or the barrier layer **738**. The end **740***a* of the cover coat **740** may be positioned between the polarizing layer **732** and the first adhesive layer **734** as shown in FIGS. **8**B and **8**C, between the display layer **730** and the second adhesive layer **739** as shown in FIG. **10**A, or between the second adhesive layer **739** and the polarizing layer **732** as shown in FIG. **10**B.

[0070] As illustrated in FIG. **10**A, if the barrier layer **738** is not included, the end **740***a* of the cover coat **740** may be positioned between the display layer **730** and the second adhesive layer **739** on the display layer **730**. Specifically, the end **740***a* of the cover coat **740** may be positioned between the display layer **730** and the second adhesive layer **739** on the end **730***a* of the display layer **730**.

[0071] Alternatively, as illustrated in FIG. **10**B, if the barrier layer **738** is not included, the end **740***a* of the cover coat **740** may be positioned between the second adhesive layer **739** and the polarizing layer **732** on the second adhesive layer **739**. Specifically, the end **740***a* of the cover

coat **740** may be positioned between the second adhesive layer **739** and the polarizing layer **732** on the end **739***a* of the second adhesive layer **739**.

[0072] As illustrated in FIG. **11**A, if the barrier layer **738** is included, the end **740***a* of the cover coat **740** may be positioned between the barrier layer **738** and the second adhesive layer **739** on the barrier layer **738**. Specifically, the end **740***a* of the cover coat **740** may be positioned between the barrier layer **738** and the second adhesive layer **739** on the end **738***a* of the barrier layer **738**.

[0073] Alternatively, as illustrated in FIG. **11**B, if the barrier layer **738** is included, the end **740***a* of the cover coat **740** may be positioned between the second adhesive layer **739** and the polarizing layer **732** on the second adhesive layer **739**. Specifically, the end **740***a* of the cover coat **740** may be positioned between the second adhesive layer **739** and the polarizing layer **732** on the end **739***a* of the second adhesive layer **739**.

[0074] In the example embodiments described above, the cover coat **740** is positioned in the non-display area (NA) on the first surface **710***a* of the flexible substrate **710**, and the end **740***a* is disposed under the polarizing layer **732** or on the polarizing layer **732**. That is, the end **740***a* of the cover coat **740** is disposed on at least one of the display layer **730**, the barrier layer **738**, the second adhesive layer **739**, the polarizing layer **732**, and the first adhesive layer **734**. In forming the cover coat **740** by coating the organic resin **410** through the jetting process of FIG. **5**, any one of the display layer **730**, the barrier layer **734**, the second adhesive layer **739**, the polarizing layer **732**, and a first adhesive layer **734** may be disposed on the display layer **730** as an element on which the end **740***a* of the cover coat **740** is to be disposed. Then, the organic resin **410** may be coated through the jetting process of FIG. **5** and hardened to form the cover coat **740**.

[0075] In the example embodiments described above, the cover coat **740** may be positioned in the non-display area (NA) on the first surface **710***a* of the flexible substrate **710**, and the end **740***a* is positioned under the polarizing layer **732** or on the polarizing layer **732**. As a result, an air gap does not occur between the adhesive layer **734** and the over coat layer **736**. Thus, it is possible to minimize or prevent adhesion failure of the over coat layer **736** or panel failure by a dint or an air gap formed between the adhesive layer **734** and the over coat layer **736**.

[0076] As illustrated, for example, in FIG. **7**, **8**A, **8**B, **9**, **10**A, **10**B, **11**A, and **11**B, the drive IC connection member **750** may be connected to the non-display area (NA) on the first surface **710***a* of the flexible substrate **710**, and the cover coat **740** may cover an end **750***a* of the drive IC connection member **750**.

[0077] Also, as described above, on the second surface **710***b* of the flexible substrate **710**, the first back plate **760***a* may be disposed to correspond the display layer **730**. The second back plate **760***b* may be disposed to correspond to the drive IC connection member **750** and may be positioned under the first back plate **760***a* when the flexible substrate **710** is bent in the bending direction. A supporting member **770** may be positioned between the first back plate **760***a* and the second back plate **760***b* in the vertical direction.

[0078] Similar to the examples shown in FIGS. **2**, **3**, and **4**A to **4**C, the example flexible display device **700** illustrated in FIG. **7** may include at least one of the first back plate **760***a*, the second back plate **760***b*, and the supporting member **770** under a bent condition, but is not limited thereto. Different variations of the support structure on the second surface **710***b* of the flexible substrate **710** may be implemented.

[0079] According to the example embodiments of the present invention described above, it is possible to prevent or reduce cracks in the flexible substrate or wiring when the flexible display device is bent. Also, according to the example embodiments of the present invention described above, it is possible to prevent or mitigate adhesion failure or panel failure in the flexible display device.

[0080] The foregoing description and the accompanying drawings of the example embodiments of the present invention are provided for illustrative purposes only and are not intended to limit the scope of the present invention. It will be apparent to those skilled in the art that various modifications and variations can be made in the flexible display device of the present invention without departing from the spirit or scope of the invention. Thus, it is intended that the present invention cover the modifications and variations of this invention and of the example embodiments described herein, provided they come within the scope of the appended claims and their equivalents.

What is claimed is:

1. A flexible display device, comprising:

a flexible substrate including a display area and a non-display area;

a display layer in the display area on a first surface of the flexible substrate;

a polarizing plate on the display layer; and

a cover coat in the non-display area on the first surface of the flexible substrate, the cover coat including a first end portion overlapping with the polarizing plate,

wherein at least a portion of the non-display area of the flexible substrate and the cover coat are bendable in a bending direction.

2. The flexible display device of claim **1**, further comprising a first adhesive layer on the polarizing plate.

3. The flexible display device of claim **2**, wherein the first end portion of the cover coat is disposed between the polarizing plate and the first adhesive layer.

4. The flexible display device of claim **2**, further comprising a second adhesive layer disposed on the display layer and under the polarizing plate.

5. The flexible display device of claim **4**, wherein the first end portion of the cover coat is disposed between the display layer and the second adhesive layer, or between the second adhesive layer and the polarizing plate.

6. The flexible display device of claim **4**, further comprising a barrier film disposed on the display layer and under the second adhesive layer,

wherein the first end portion of the cover coat is disposed between the display layer and the barrier film, between the barrier film and the second adhesive layer, or between the second adhesive layer and the polarizing plate.

7. The flexible display device of claim **1**, further comprising:

an adhesive layer disposed on the display layer and under the polarizing plate,

wherein the first end portion of the cover coat is disposed between the display layer and the adhesive layer, or between the adhesive layer and the polarizing plate.

8. The flexible display device of claim **1**, further comprising:

a barrier film disposed on the display layer and under the polarizing plate; and

an adhesive layer disposed on the barrier film and under the polarizing plate,

wherein the first end portion of the cover coat is disposed between the display layer and the barrier film, between the barrier film and the adhesive layer, or between the adhesive layer and the polarizing plate.

9. The flexible display device of claim **1**, further comprising an over coat layer on the first adhesive layer and bonded to the polarizing plate through the first adhesive layer.

10. A flexible display device, comprising:

a flexible substrate including a display area and a non-display area;

a display layer in the display area on a first surface of the flexible substrate;

at least one additional layer on the display layer; and

a cover coat disposed in the non-display area on the first surface of the flexible substrate, the cover coat including an end portion overlapping with the one additional layer and disposed between the display layer and the one additional layer,

wherein at least a portion of the non-display area of the flexible substrate and the cover coat are bendable in a bending direction.

11. The flexible display device of claim **10**, further comprising:

a drive integrated circuit (IC) connection member disposed in the non-display area on the first surface of the flexible substrate,

wherein the cover coat includes a second end portion covering an end of the drive IC connection member.

12. The flexible display device of claim **11**, wherein the drive IC connection member includes at least one of a tape carrier package (TCP) and a chip on film (COF).

13. The flexible display device of claim **10**, further comprising:

a first back plate disposed in the display area on a second surface of the flexible substrate opposite the first surface;

a second back plate disposed in the non-display area on the second surface of the flexible substrate; and

a supporting member positioned between the first back plate and the second back plate when the flexible substrate is bent in the bending direction.

14. The flexible display device of claim **13**, wherein, when the flexible substrate is bent in the bending direction, the supporting member includes an end portion having a semicircular shape and contacting the second surface of the flexible substrate at a bent area of the flexible substrate.

15. The flexible display device of claim **14**, wherein, when the flexible substrate is bent in the bending direction, the semicircular end portion of the supporting member has a radius substantially equal to a radius of the bent area of the flexible substrate so that the semicircular end portion of the supporting member substantially entirely contacts the second surface of the flexible substrate a the bent area of the flexible substrate.

16. The flexible display device of claim **10**, wherein the one additional layer is one of the polarizing plate, an adhesive layer, and a barrier film.

17. A flexible display device, comprising:

a flexible substrate including a display area and a non-display area;

a display layer in the display area on a first surface of the flexible substrate;

a bendable cover coat disposed in the non-display area on the first surface of the flexible substrate;

a first back plate disposed in the display area on a second surface of the flexible substrate opposite the first surface;

a second back plate disposed in the non-display area on the second surface of the flexible substrate; and

a supporting member positioned between the first back plate and the second back plate when the flexible substrate is bent in the bending direction.

18. The flexible display device of claim **17**, wherein, when the flexible substrate is bent in the bending direction, the supporting member includes an end portion having a semicircular shape and contacting the second surface of the flexible substrate at a bent area of the flexible substrate.

19. The flexible display device of claim **18**, wherein, when the flexible substrate is bent in the bending direction, the semicircular end portion of the supporting member has a radius substantially equal to a radius of the bent area of the flexible substrate so that the semicircular end portion of the supporting member substantially entirely contacts the second surface of the flexible substrate a the bent area of the flexible substrate.

20. The flexible display device of claim **17**, further comprising:

at least one additional layer on the display layer, the at least one additional layer being one or more of a polarizing plate, an adhesive layer, and a barrier film; and

a drive integrated circuit (IC) connection member disposed in the non-display area on the first surface of the flexible substrate,

wherein the bendable cover coat includes:

a first end portion overlapping with the at least one additional layer, and disposed between the display layer and the at least one additional layer in the display area of the flexible substrate; and

a second end portion covering an end of the drive IC connection member in the non-display area of the flexible substrate.

* * * * *